DATASHEET - DX-LN3-160

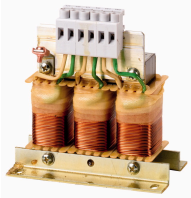

Main choke, three-phase, 550 V + 0% (50/60 Hz), V AC, 160 A, 0.11 mH

Part no.	**DX-LN3-160**
Catalog No.	**269511**
Alternate Catalog No.	**DX-LN3-160**

Delivery program

Product range			Accessories
Accessories			Mains chokes
Description			three-phase
For use with			DA1, SVX, SPX
Max. permissible connection voltage		V AC	550 V + 0% (50/60 Hz)
Rated operational current	I_e	A	160
Inductance	L	mH	0.11
Maximum heat dissipation	P_v	W	140

Technical data

General

Standards			IEC/EN 61558-2-20-2000, VDE 0570 Part 2-20/2001-04, UL, CSA
Operating temperature		°C	-25 to +40, up to 70 with current derating (see the note)
Storage temperature	ϑ	°C	-25 - +85
Mechanical shock resistance		g	11 ms^2/15 3 shocks
Vibration resistance		g	1 (0 - 150 Hz)
Vibration			0.35 mm at 10 - 55 Hz
Altitude		m	0 – 1000 above sea level, up to 5000 with current reduction (see notes)
Mounting position			Standing vertically, suspended horizontally
Free surrounding areas		MM	< 50
Degree of Protection			IP00 (connection lugs)
Rated duty factor		% DF	100
Weight		kg	12.3

Electrical data

Rated operational voltage			3 AC 400 V
Max. supply voltage		V AC	550 V + 0% (50/60 Hz)
Operating frequency	f	Hz	50/60
Insulation class			B
Rated operational current	I_e	A	160
Inductance	L	mH	0.11
Maximum heat dissipation	P_v	W	140
Voltage sag	U_k	%	2.5

Connection

Connection lugs			✓
PE stud			✓
Connection lug		mm^2	Cu 25 x 5
Drilling		mm	11
Tightening torque		Nm	10

Notes

			The following applies for the installation altitude: Derating with respect to the rated operational current I_e: 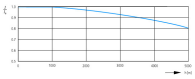

Design verification as per IEC/EN 61439

Technical data for design verification			
Rated operational current for specified heat dissipation	I_n	A	160
Heat dissipation per pole, current-dependent	P_{vid}	W	0
Equipment heat dissipation, current-dependent	P_{vid}	W	140
Static heat dissipation, non-current-dependent	P_{vs}	W	0
Heat dissipation capacity	P_{diss}	W	0
Operating ambient temperature min.		°C	-25
Operating ambient temperature max.		°C	40
IEC/EN 61439 design verification			
10.2 Strength of materials and parts			
10.2.2 Corrosion resistance			Meets the product standard's requirements.
10.2.3.1 Verification of thermal stability of enclosures			Meets the product standard's requirements.
10.2.3.2 Verification of resistance of insulating materials to normal heat			Meets the product standard's requirements.
10.2.3.3 Verification of resistance of insulating materials to abnormal heat and fire due to internal electric effects			Meets the product standard's requirements.
10.2.4 Resistance to ultra-violet (UV) radiation			Meets the product standard's requirements.
10.2.5 Lifting			Does not apply, since the entire switchgear needs to be evaluated.
10.2.6 Mechanical impact			Does not apply, since the entire switchgear needs to be evaluated.
10.2.7 Inscriptions			Meets the product standard's requirements.
10.3 Degree of protection of ASSEMBLIES			Does not apply, since the entire switchgear needs to be evaluated.
10.4 Clearances and creepage distances			Meets the product standard's requirements.
10.5 Protection against electric shock			Does not apply, since the entire switchgear needs to be evaluated.
10.6 Incorporation of switching devices and components			Does not apply, since the entire switchgear needs to be evaluated.
10.7 Internal electrical circuits and connections			Is the panel builder's responsibility.
10.8 Connections for external conductors			Is the panel builder's responsibility.
10.9 Insulation properties			
10.9.2 Power-frequency electric strength			Is the panel builder's responsibility.
10.9.3 Impulse withstand voltage			Is the panel builder's responsibility.
10.9.4 Testing of enclosures made of insulating material			Is the panel builder's responsibility.
10.10 Temperature rise			The panel builder is responsible for the temperature rise calculation. Eaton will provide heat dissipation data for the devices.
10.11 Short-circuit rating			Is the panel builder's responsibility. The specifications for the switchgear must be observed.
10.12 Electromagnetic compatibility			Is the panel builder's responsibility. The specifications for the switchgear must be observed.
10.13 Mechanical function			The device meets the requirements, provided the information in the instruction leaflet (IL) is observed.

Technical data ETIM 7.0

Low-voltage industrial components (EG000017) / Coil for low-voltage (EC002563)			
Electric engineering, automation, process control engineering / Electronic coil and filter / Electronic choke coil / Electronic choke coil (unspecified) (ecl@ss10.0.1-27-42-01-90 [ADJ199007])			
Suitable as interference suppression reactance coil			No
Suitable as net reactance coil			Yes
Suitable as commutation reactance coil			No
Suitable as ripple filter choke			No
Suitable as output reactance coil			No
Number of poles, primary side			3
Rated clock frequency		kHz	0
Rated operation frequency		Hz	50 - 60
Max. rated operation voltage Ue		V	550
Rated current at AC		A	160 - 160
Max. rated current (Ith) at rated voltage DC		A	160
Rated inductance		mH	0.11
Degree of protection (IP)			IP00
Relative short circuit voltage		%	2.5
Resonance frequency		Hz	0

Degree of protection (NEMA)			Other

Approvals

Product Standards			UL 508C; CSA-C22.2 No. 14; IEC/EN61800-3; IEC/EN61800-5; CE marking
UL File No.			E167225
UL Category Control No.			XPTQ2, XPTQ8
CSA File No.			UL report applies to both US and Canada
North America Certification			UL listed, certified by UL for use in Canada
Specially designed for North America			No
Suitable for			Branch circuits
Max. Voltage Rating			1~ 240 V AC IEC: TN-S UL/CSA: "Y" (Solidly Grounded Wey), 3~ 240 V AC IEC: TN-S UL/CSA: "Y" (Solidly Grounded Wey), 3~ 480 V AC IEC: TN-S UL/CSA: "Y" (Solidly Grounded Wey)
Degree of Protection			IEC: IP00

Dimensions

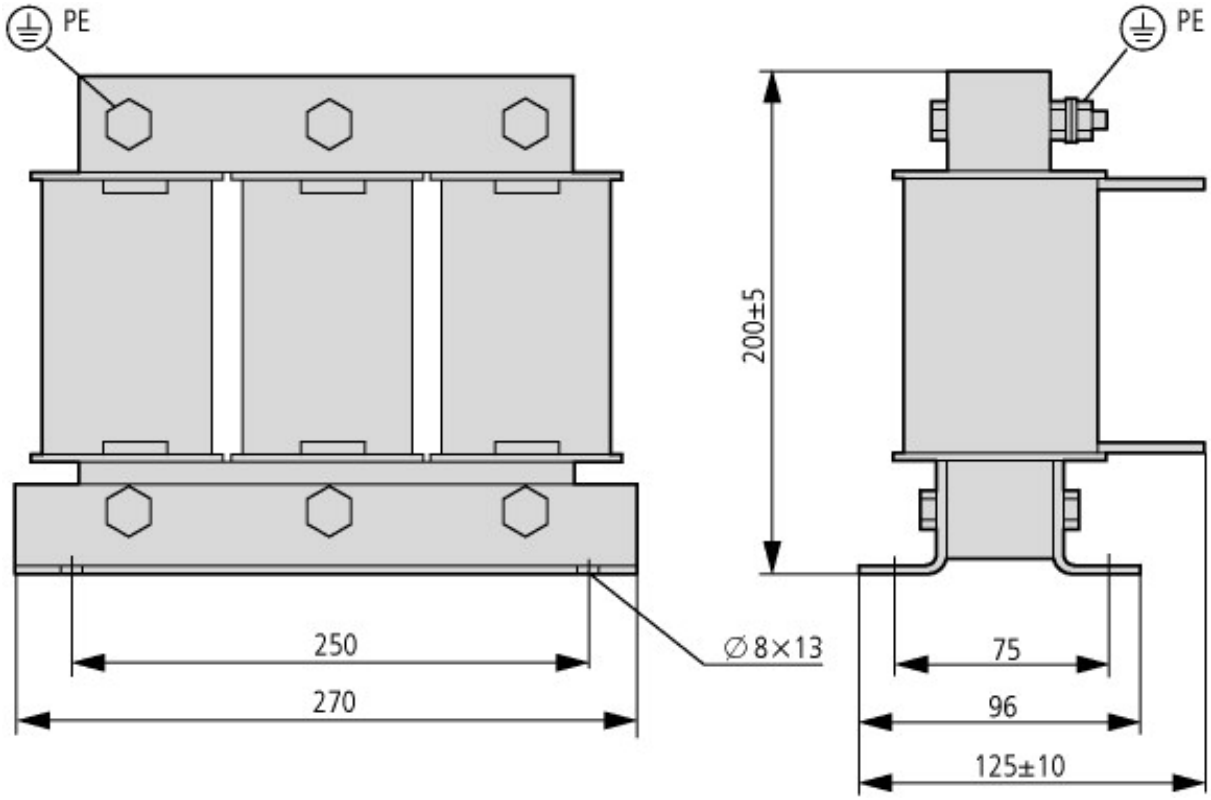

Height tolerance depends on gap
The position of connection lugs U2-V2-W2 depends on the coil material and can deviate from the position illustrated here.

[1] Toleranz in Abhängigkeit vom Luftspalt.
The position of connection lugs U2-V2-W2 depends on the coil material and can deviate from the position illustrated here.

Additional product information (links)

IL00906003Z Mains chokes, motor chokes	
IL00906003Z Mains chokes, motor chokes	https://es-assets.eaton.com/DOCUMENTATION/AWA_INSTRUCTIONS/IL00906003Z2020_09.pdf
MN04020003Z DC1 variable frequency drives, Installation manual	
MN04020003Z Frequenzumrichter DC1, Installationshandbuch - Deutsch	https://es-assets.eaton.com/DOCUMENTATION/AWB_MANUALS/MN04020003Z_DE.pdf
MN04020003Z DC1 variable frequency drives, Installation manual - English	https://es-assets.eaton.com/DOCUMENTATION/AWB_MANUALS/MN04020003Z_EN.pdf
MN04020003Z Frekvenční měnič DC1, manuál Instalace - čeština	https://es-assets.eaton.com/DOCUMENTATION/AWB_MANUALS/MN04020003Z_CZ.pdf
MN04020003Z Convertitore di frequenza DC1, manuale Installazione - italiano	https://es-assets.eaton.com/DOCUMENTATION/AWB_MANUALS/MN04020003Z_IT.pdf
MN04020005Z DA1 variable frequency drives, Installation manual	
MN04020005Z Frequenzumrichter DA1, Installationshandbuch - Deutsch	https://es-assets.eaton.com/DOCUMENTATION/AWB_MANUALS/MN04020005Z_DE.pdf
MN04020005Z DA1 variable frequency drives, Installation manual - English	https://es-assets.eaton.com/DOCUMENTATION/AWB_MANUALS/MN04020005Z_EN.pdf

MN04020005Z Convertitore di frequenza DA1, manuale Installazione - italiano	https://es-assets.eaton.com/DOCUMENTATION/AWB_MANUALS/MN04020005Z_IT.pdf
CA04020001Z-EN Product Range Catalog: Efficient Engineering for Starting and Controlling Motors	http://www.eaton.eu/DE/ecm/groups/public/@pub/@europe/@electrical/documents/content/pct_1095238.pdf