DATASHEET - SL4-L120

Filament lamp, 120V, 4W

Part no.	**SL4-L120**
Catalog No.	**171384**
Alternate Catalog No.	**SL4-L120**
EL-Nummer (Norway)	**4137619**

Delivery program

Product range			Accessories
Basic function accessories			Filament bulbs
Mounting			Ba15d
lifespan		h	3000
Power			4 W
Rated operational voltage	U_e	V	120 V
For use with			SL4-L-…
Connection to SmartWire-DT			no

Design verification as per IEC/EN 61439

Technical data for design verification			
Operating ambient temperature min.		°C	-30
Operating ambient temperature max.		°C	60

Technical data ETIM 7.0

Lamps (EG000028) / Indication- and signalling lamp (EC000399)

Electric engineering, automation, process control engineering / Lighting installation, device / Light medium / Indication- and signal lamp (ecl@ss10.0.1-27-11-06-31 [AKE242014])

Lamp power		W	4 - 4
Lamp voltage		V	120 - 120
Luminous flux		lm	0
Socket			BA15d
Technology			Incandescent lamp
Lamp shape			Other
Halogen			No
Krypton			No
Xenon			No
Colour			None
Colour temperature		K	2800
Diameter		mm	0
Total length		mm	0
Suitable for torches			No
Suitable for pointer			Yes
Suitable for round flashing luminaire			Yes
Nominal current		mA	0
Average nominal lifespan		h	3000
Energy efficiency class			

Dimensions

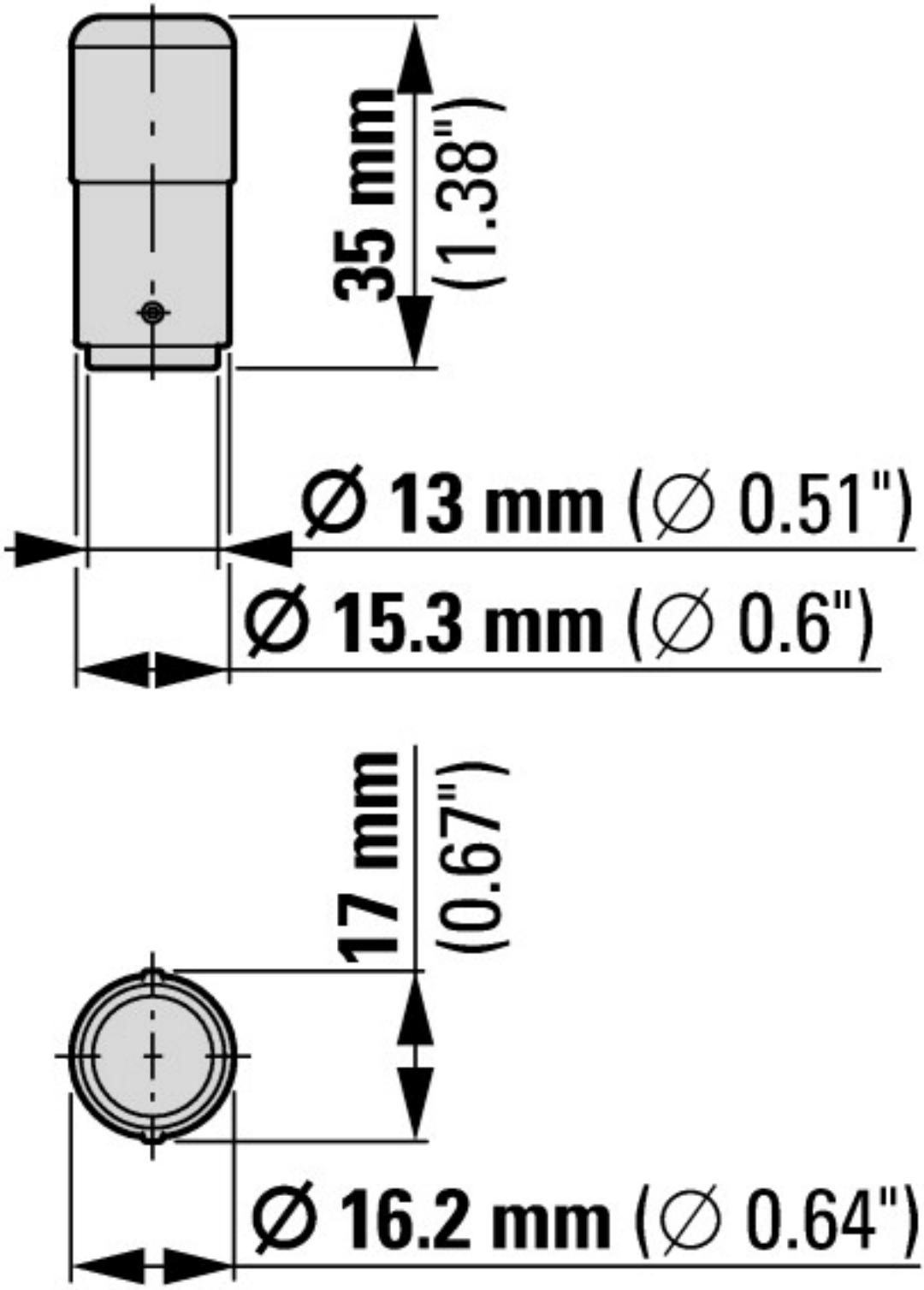

Assets (links)

Declaration of CE Conformity

00002899

Instruction Leaflets

IL047005ZU2018_05

Additional product information (links)

IL047005ZU SL4/7 Incandescent Modules	
IL047005ZU SL4/7 Incandescent Modules	ftp://ftp.moeller.net/DOCUMENTATION/AWA_INSTRUCTIONS/IL047005ZU2018_05.pdf

© 03/2020 by Eaton Industries GmbH