Powering Business Worldwide

**Instruction Leaflet**
**Montageanweisung**
**Notice d'installation**

**07/21 IL008005ZU**

# T3-2-2092CH/I2/SVB(-SW)-SI-CH(D)(F)(-24V)-230V
# T3-2-2092CH/EA/SVB(-SW)-SI-CH(D)(F)

en **Electric current! Danger to life!**
Only skilled or instructed persons may carry out the following operations.

de **Lebensgefahr durch elektrischen Strom!**
Nur Elektrofachkräfte und elektrotechnisch unterwiesene Personen dürfen die im Folgenden beschriebenen Arbeiten ausführen.

fr **Tension électrique dangereuse !**
Seules les personnes qualifiées et averties doivent exécuter les travaux ci-après.

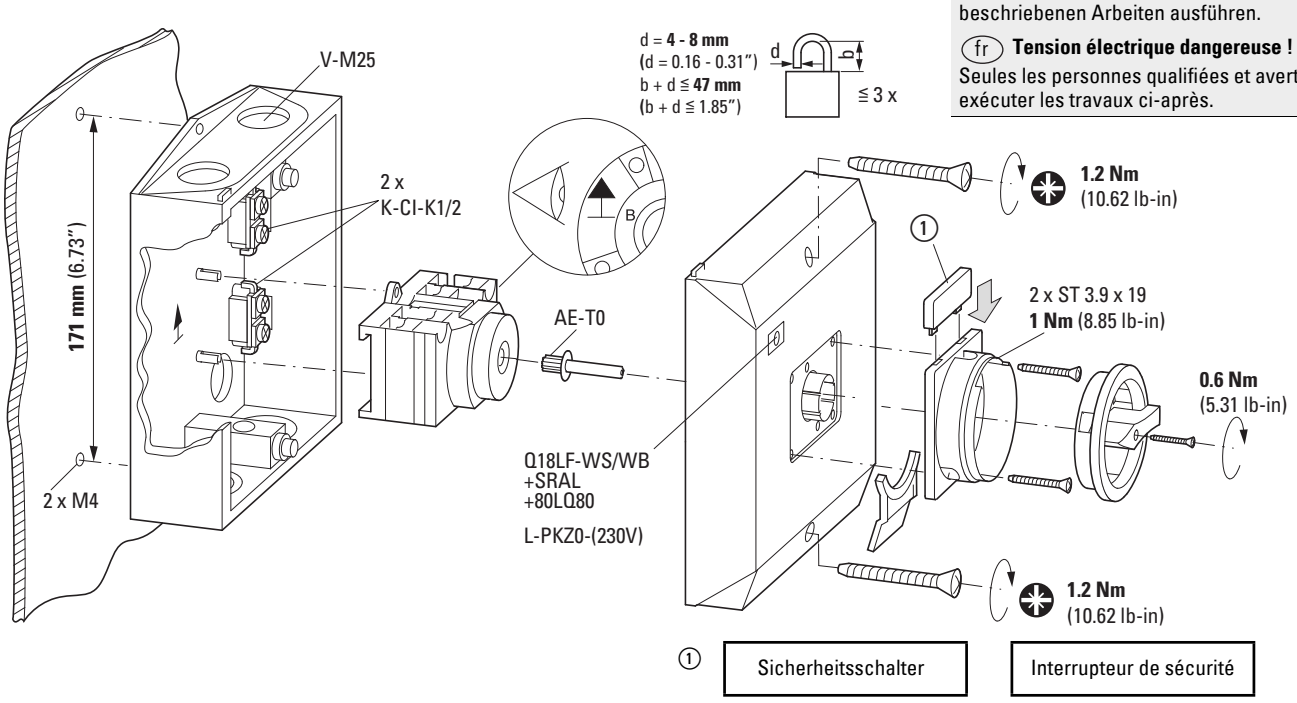


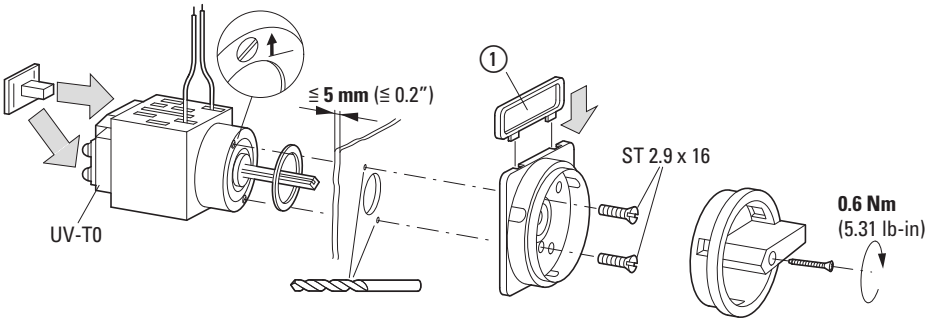


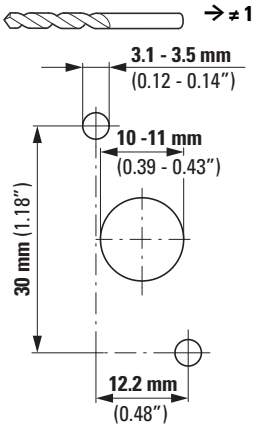


**Example**

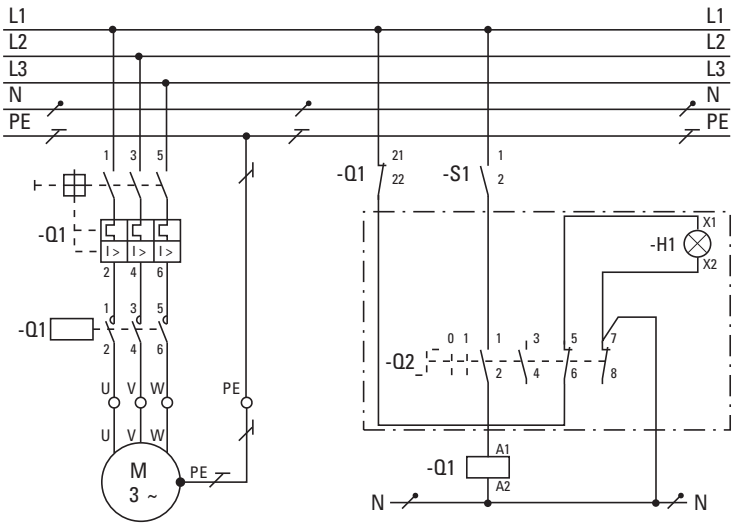


| | | Z 2 | 1.0 x 6 |
|---|---|---|---|
| | 1 x 0.75 - 4.0 mm² | **1.6 Nm** | |
| | 2 x 0.75 - 4.0 mm² | (14.16 lb-in) | |
| | 1 x 1.0 - 6.0 mm² | **1.6 Nm** | |
| | 2 x 1.0 - 6.0 mm² | (14.16 lb-in) | |

| | a |
|---|---|
| T3 | **9.5 mm** (0.37") |
| K-CI-K1/2 | **9 mm** (0.35") |
| UV-T0 | **9 mm** (0.35") |

**© 2013 Eaton Industries GmbH**



EU: Eaton Industries GmbH, Hein-Moeller-Straße 7-11, 53115 Bonn, Germany
UK: Eaton Electrical Products Ltd, Melton Road, Burton-on-the-Wolds, Leicestershire, LE12 5TH, United Kingdom

**Eaton.com/contacts**
**Eaton.com/aftersales**
**Eaton.com/documentation**

07/21 IL008005ZU
**Eaton.com/recycling**