ENGINEERING
TOMORROW

Data Sheet

Liquid level sensor
Type **AKS 4100** and **AKS 4100U**

Designed specifically to measure liquid levels in a wide range of refrigeration applications

The AKS 4100/4100U liquid level sensor is designed specifically to measure liquid levels in a wide range of refrigeration applications.

The AKS 4100/4100U liquid level sensor is based on a proven techhology called Time Domain Reflectometry (TDR) or Guided Micro Wave.

AKS 4100/4100U liquid level sensor can be used to measure the liquid level of many different refrigerants in vessels, accumulators, receivers, standpipes, etc.The electrical output is a 2-wired, loop powered 4 – 20 mA output signal, which is proportional to the refrigerant liquid level.

AKS 4100/4100U in a cable version is suitable for HCFC, Non flammable HFC and R717 (Ammonia), and differing lengths from 800 mm / 31.5 in. and up to 5000 mm / 197 in.

The coaxial version of AKS 4100/4100U is designed for use with R744 (CO_2), HCFC, Non flammable HFC and R717 (Ammonia).

The AKS 4100/4100U coaxial version should always be used for marine applications for all refrigerant types. The AKS 4100/4100U cable version should NOT be used for CO_2 or marine applications.

Dust, foam, vapour, agitated surfaces, boiling surfaces, changes in density or in the dielectric constant , εr, for the liquid have no influence on the AKS 4100/4100U performance.

Oil accumulated in the bottom of a standpipe will not disturb the liquid level signal and it is not necessary to remove AKS 4100/4100U for cleaning after oil has been drained out of the standpipe.

AI243386442914en-001201

Features

- Approved and qualified by Danfoss for refrigeration applications
- One product covering several probe lengths (cable version)
- A single product for all commonly used refrigerants (cable version)
- Cable version requires less top-end clearance for installation and service
- Proven operation with all refrigerants in combination with oil
- No need to clean cable version when fully covered by oil
- The cable version is very compact and easy to handle, ship, install and use with different lengths and refrigerants
- Changes of the liquid dielectric constant (εr) do not affect operation
- 5000 mm / 197 in. probe length with cable version
- 2-wire loop powered; no separate transformer needed
- Multi language HMI. Level and setting readout in mm,cm,m (ft, in.)
  - Language HMI versions:
    - English (default), German, French, Spanish
    - English (default),Japanese, Chinese Russian

NOTE:
AKS 4100/4100U can be connected directly to Danfoss EKE 347 liquid level controller and thus be powered from EKE 347.If used together with Danfoss EKC 347 liquid level controller, a 14 – 30 V DC supply is required.

Media

Refrigerants

The listed refrigerants are qualified and approved by Danfoss: [1]
R717 / NH_3: -40 / +50 °C / (-40 / +122 °F)
R744 / CO_2: -50 / +15 °C / (-58 / +59 °F)
HCFC: R22 -50 / +48 °C / (-58 / +118 °F)
HFC: R404A -50 / +15 °C / (-58 / +59 °F)
R410A -50 / +15 °C / (-58 / +59 °F)
R134A -40 / +50 °C / (-40 / +122 °F)

The listed refrigerants may be used in the complete temperature range of AKS 4100/4100U, however, the accuracy may be affected if the above listed temperature range is exceeded.

Other refrigerants within the groups of HCFC and HFC can be detected and measured if the following conditions are fulfilled:

Reference conditions
Dielectric constant
Cable version can be used in R717 / NH3, HCFC and HFC (εr, liquid > 5.6).

The coaxial version is mandatory for use in:
- R744 / CO_2 (εr, liquid > 1.3)
- Marine applications

The coaxial version can also be used in the refrigerants:
- R717 / NH_3, HCFC and HFC

New refrigerants

Danfoss products are continually evaluated for use with new refrigerants depending on market requirements.

When a refrigerant is approved for use by Danfoss, it is added to the relevant portfolio, and the R number of the refrigerant (e.g. R513A) will be added to the technical data of the code number. Therefore, products for specific refrigerants are best checked at store.danfoss.com/en/, or by contacting your local Danfoss representative.

[1] AKS 4100 Coaxial 280mm and AKS 4100U Coaxial 11 in are only released for R717/NH_3

Product specification

Pressure and temperature data

Table 1: Pressure and temperature data

Description	Features
Refrigerant temperature	-60 °C / +100 °C (-76 °F / +212 °F)
Ambient temperature	-40 °C / +80 °C (-40 °F / +176 °F) For HMI : -20 °C / +60 °C (-4 °F / +140 °F)
Process pressure	-1 – 100 bar / -14.5 – 1450 psig
Terminals (spring loaded)	0.5 – 1.5 mm^2 (~20-15 AWG)
Ambient temperature supply voltage limitations:	-40 °C / +80 °C (-40 °F / +176 °F) -20 °C / +80 °C (-4 °F / +176 °F) : 14 – 30 V DC

Product concept

AKS 4100/4100U is available in two different versions:
- Cable version
- Coaxial version

Cable version

Figure 1: CABLE version

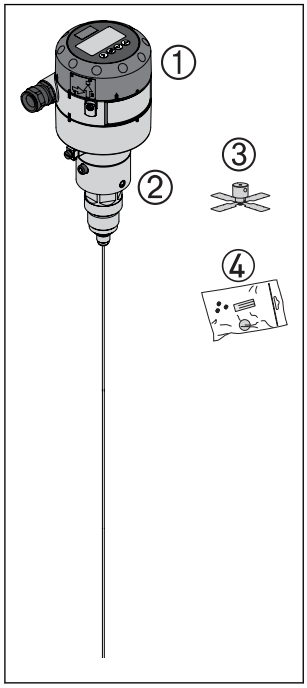

1	Signal converter, which can be supplied with or without HMI
2	Mechanical process connection with 5 m / 197 in., Ø2 mm / 0.08 in. stainless cable
3	Counterweight
4	**Accessory bag comprising:** • 3 mm set screws • Red cover to protect mechanical process connection (**2**) prior to mounting signal converter • Setting label

With the cable version it is possible to adapt the AKS 4100/4100U to any possible length in the range of 800 mm / 31.5 in. to 5000 mm / 196.9 in.

Cable version can be used in R717 / NH_3, HCFC and HFC (εr, liquid > 5.6).

Figure 2: AKS 4100/4100U cable version must ALWAYS be installed in a standpipe

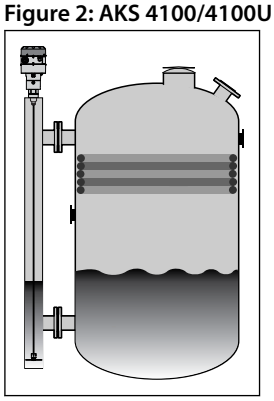

Coaxial version

Coaxial D14 version

Figure 3: Coaxial D14 version

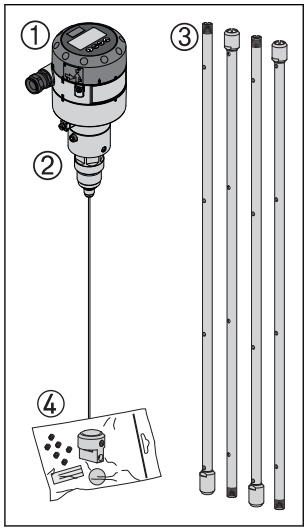

1	Signal Converter (with or without HMI)
2	Mechanical process connection with 5 m / 197 in., Ø2 mm / 0.08 stainless wire
3	Tube(s) depending on required length
4	**Accessory bag comprising:** • End Connector (incl. 3 mm / 0.12 in. set screws.) • 3 mm / 0.12 in. set crews (1 set screw pr. tube) • Red cover to protect mechanical process connection (**2**), before Signal Converter is mounted • Setting label

Coaxial D22 version

Figure 4: Coaxial D22 version

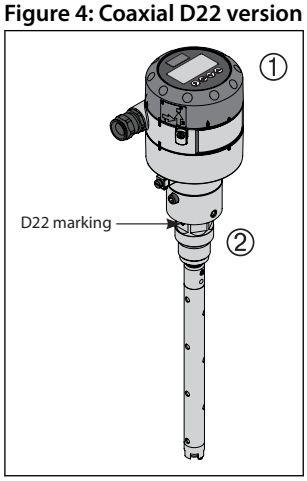

1	Signal Converter (with or without HMI)
2	Mechanical process connection 280 mm / 11 in., 8 mm / 0.3 in. inner rod

The coaxial version is mandatory for use in:

- R744 / CO_2 (εr, liquid > 1.3)
- Marine applications

The coaxial version can also be used in the refrigerants:
- R717 / NH_3, HCFC and HFC

Figure 5: AKS 4100/4100U, Coaxial can be installed in a standpipe (a) or directly in a vessel (b)

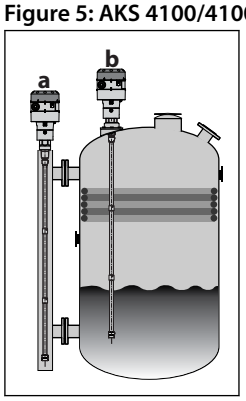

Table 2: The coaxial version is available in the following probe lengths:

Danfoss type	Tube diameter		Type selection in HMI	Thread
AKS 4100, 280 mm	22 mm	0.87 in.	D22	G1 in. pipe thread
AKS 4100, 500 mm	14 mm	0. 55 in.	D14	G1 in. pipe thread
AKS 4100, 800 mm	14 mm	0.55 in.	D14	G1 in. pipe thread
AKS 4100, 1000 mm	14 mm	0.55 in.	D14	G1 in. pipe thread
AKS 4100, 1200 mm	14 mm	0.55 in.	D14	G1 in. pipe thread
AKS 4100, 1500 mm	14 mm	0.55 in.	D14	G1 in. pipe thread
AKS 4100, 1700 mm	14 mm	0.55 in.	D14	G1 in. pipe thread
AKS 4100, 2200 mm	14 mm	0.55 in.	D14	G1 in. pipe thread
AKS 4100U, 11.0 in.	22 mm	0.87 in.	D22	¾ in. NPT
AKS 4100U, 19.2 in.	14 mm	0.55 in.	D14	¾ in. NPT
AKS 4100U, 30 in.	14 mm	0.55 in.	D14	¾ in. NPT
AKS 4100U, 45 in.	14 mm	0.55 in.	D14	¾ in. NPT
AKS 4100U, 55 in.	14 mm	0.55 in.	D14	¾ in. NPT
AKS 4100U, 65 in.	14 mm	0.55 in.	D14	¾ in. NPT
AKS 4100U, 85 in.	14 mm	0.55 in.	D14	¾ in. NPT

Optional HMI

The optional HMI Service/Display unit is used for commissioning and quick on-site setup and is easily mounted on the AKS 4100/4100U.

The service unit supports mulitple languages in both SI and US units.

Supported standard languages: English (default), German, French, Spanish, Japanese, Chinese and Russian.

Figure 6: HMI display unit

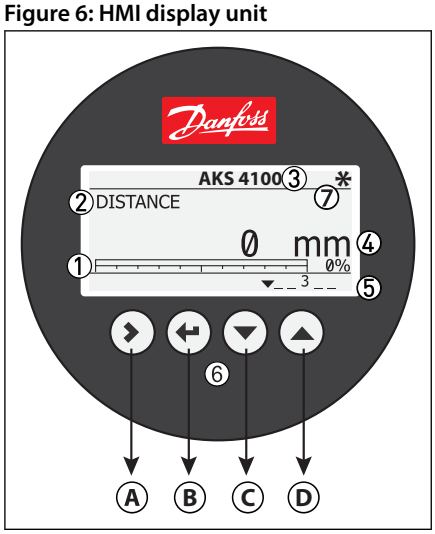

1	4 – 20 mA output displayed as bar graph and in percentage [%]
2	Measurement name (in this example, DISTANCE)
3	Device tag name
4	Measurement reading and unit
5	Device status (markers) **Marker 1, 2 and 3 (Error)** Hardware problem; the Signal Converter hardware is defective. Contact Danfoss **Marker 4 and 5 (Notification)** Depending on the level, the marker is ON or OFF. Used for Danfoss service information only
6	Keypad buttons
7	Flashing star indicating unit in operation
A	Enter menu system Enter QUICK SETUP
B	Unit change at distance/level readout: m, cm, mm, in, ft
C & D	Change between: Distance [(1)] Level [(2)] Output (%) [(3)] Output (mA) [(4)]

[(1)] If the display is set to "DISTANCE" the displayed value will be the distance from the Reference point to the top surface of the liquid refrigerant (see Page 11 and Page 12)
[(2)] If the display is set to "LEVEL" then the value displayed will be: PROBE LENGTH (entered in QUICK SETUP) – DISTANCE (see Page 11 and Page 12)
[(3)] Will represent the level of refrigerant,in percent, scaled (entered in QUICK SETUP) according to: SCALE 4 mA (0%), SCALE 20 mA (100%) (see Page 11 and Page 12).
[(4)] Will represent the level of refrigerant, in 4 – 20 milliampere, scaled (entered in QUICK SETUP) according to: SCALE 4 mA (4 mA), SCALE 20 mA (20 mA) (see Page 11 and Page 12).

Design

Table 3: Design

Description	Probe types	Values
Options	Cable	Mechanical process connection with 5 m / 197 in., Ø2 mm / 0.08 in. stainless cable: Mechanical thread on the mechanical process connection AKS 4100: G1 in. pipe thread. Aluminium gasket included AKS 4100U: ¾ in. NPT
	Coaxial D14	Mechanical process connection with 5 m / 197 in., Ø2 mm / 0.08 in. stainless cable and 14 mm / 0.55 in. outer stainless tube: Mechanical thread on the mechanical process connection AKS 4100: G1 in. pipe thread. Aluminium gasket included AKS 4100U: ¾ in. NPT Stainless steel tubes supporting the available probe length
	Coaxial D22	Mechanical process connection with in 22 mm / 0.87 in. outer stainless tube. 8 mm / 0.3 in. inner rod. Mechanical thread on the mechanical process connection AKS 4100: G1 in. pipe thread. Aluminium gasket included AKS 4100U: ¾ in. NPT
	LCD display	
Insertions (probe) length	Coaxial D14	AKS 4100: 500, 800, 1000, 1200, 1500, 1700 and 2200 mm AKS 4100U: 19.2, 30, 45, 55, 65, 85 in.
	Coaxial D22	AKS 4100: 280 mm AKS 4100U: 11.0 in.
	Single cable Ø2 mm / 0.08 in.: 800 – 5000 mm / 31.5-197 in.	
Dead zone	This depends on the type of probe. (see pages 7 and 8)	

Table 4: Display and User interface

Description	Values
Display	Integrated LCD display
	128 × 64 pixels in 8-step greyscale with 4-button keypad
Interface languages	English (default), German, French, Spanish, Japanese, Chinese, Russian

Table 5: Operating conditions

Description	Values
Ambient temperature	-40 °C / +80 °C (-40 °F / +175 °F) For HMI: -20 °C / +60 °C (-4 °F / +140 °F)
Storage temperature	-40 °C / +85 °C (-40 °F / +185 °F)
Process connection temperature	Standard: -60 °C / +100 °C (-76 °F / +212 °F)
Operating pressure	Standard: -1 bar to 100 bar / -14.5 psig to 1450 psig

Table 6: Other conditions:

Description	Values
Liquid dielectric constant (εr)	Cable version to be used in R717 / NH3, HCFC and HFC εr, liquid > 5.6 Coaxial version is mandatory in R744 / CO2 εr, liquid > 1.3
Vibration resistance	EN 60721-3-4 (1 – 9 Hz: 3 mm / 10 – 200 Hz:1g; 10g shock half-wave sinusoidal: 11 ms)
Protection category	IP 66/67 equivalent to NEMA type 4X (housing) and type 6P (probe)

Table 7: Installation conditions

Description	Values
Dimensions and weights	See Dimensions and weights

Table 8: Material

Description	Values
Housing	Aluminium
Coaxial D14 and D22 version	Standard: Stainless steel (1.4404 / 316L)
Single cable	Standard: Stainless steel (1.4401 / 316)
Process fitting	Standard: Stainless steel (1.4404 / 316L)
Gaskets	EPDM (-50 / +150 °C (-58 / +300 °F)
Cable gland	Plastic (black)

Table 9: Process connections - Thread

Description	Values
Single cable Ø2 mm / 0.08"	AKS 4100: G1 inch pipe thread. Aluminium gasket included AKS 4100U: ¾ in. NPT
Coaxial D14 and D22 version	AKS 4100: G1 inch pipe thread. Aluminium gasket included AKS 4100U: ¾ in. NP

Table 10: Electrical connections

Description	Values
Power supply	Terminals output: 14 – 30 V DC. Min./Max. Value for an output of 22 mA at the terminal. Ambient temperature limitations: -40 °C / +80 °C (-40 °F / +176 °F) : 16 – 30 V DC -20 °C / +80 °C (-4 °F / +176 °F) : 14 – 30 V DC
Current output load	RL [Ω] ≤ ((Uext -14 V)/20 mA). – Default (Error output set to 3.6 mA) RL [Ω] ≤ ((Uext -14 V)/22 mA). – (Error output set to 22 mA)
Cable gland	AKS 4100: PG 13, M20×1.5 ; (cable diameter: 6 – 8 mm / 0.24 – 0.31 in.) AKS 4100U: ½ in. NPT
Cable entry capacity (terminal)	0.5 – 1.5 mm^2 (~20-15 AWG)

Table 11: Input and output

Description	Values
Output signal	4 – 20 mA or 3.8 – 20.5 mA acc. to NAMUR NE 43
Resolution	±3 µA
Temperature drift	Typically 75 ppm/K
Error signal	High: 22 mA; Low: 3.6 mA acc. to NAMUR NE 43; Hold (frozen value - not available with NAMURNE 43 compliant output

Minimum power supply voltage

Figure 7: Use this graph to find the minimum power supply voltage for a given current output load:

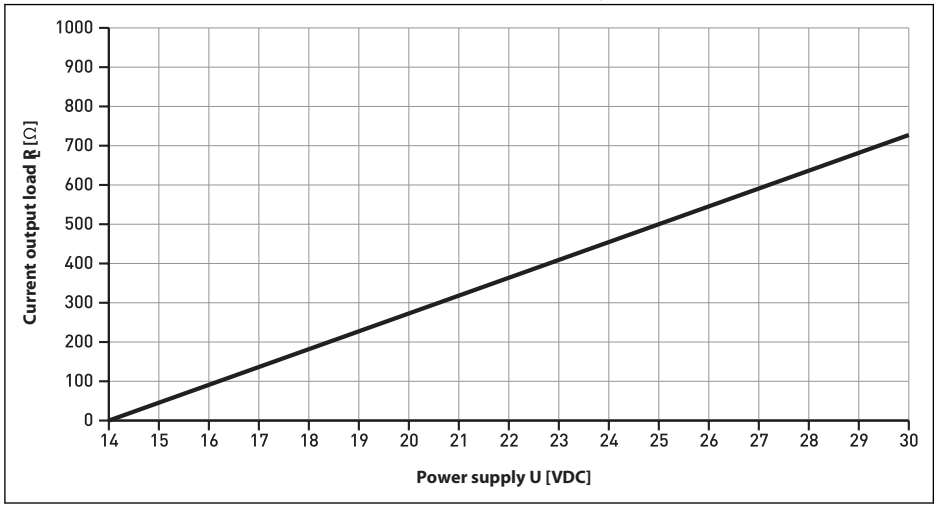

NOTE:
Minimum power supply voltage for an output of 22mA at the terminal.

Measuring system

Table 12: Measuring system

Features	Description
Measuring principle	2-wire loop-powered level transmitter; Time Domain Reflectometry (TDR)
Application range	Level measurement of liquid refrigerants. Approved refrigerants: Halogen Free / Environmently friendly: R717 / NH3, R744 / CO_2 HCFC and non flammable HFC.
Primary measured value	Time between the emitted and received signal
Secondary measured value	Distance or level

Measuring principle (Cable and Coaxial)

The AKS 4100/4100U electronic converter emits low-intensity, high frequency electromagnetic pulses with a width of approximately 1 nanosecond, which travel at the speed of light along the probe (wire or coaxial cable) down to the liquid surface.

The pulses are reflected by the liquid surface, guided back along the probe, and received and analysed by the AKS 4100/4100U electronic converter and then converted into a liquid level reading. This method is called time domain reflectometry (TDR) or guided microwave.

The dielectric constant, εr, of the liquid is a key parameter and has a direct impact on the degree of reflection of the high frequency electromagnetic pulses. Liquids with high εr values, such as ammonia, produce strong reflections, while liquids with low εr values, such as CO_2, produce weak reflections.

As long as the εr value of the liquid refrigerant is higher than 1.2, AKS 4100/4100U can detect the liquid level and level measurement accuracy is not affected.

NOTE:
If the temperature condition in the standpipe /vessel is known, a constant (dielectric constant of the refrigerant gas) can be entered (parameter 2.5.3 GAS EPS.R), in order to obtain improved Top and Bottom Dead Zone values.

Refer to Page 11 page 10 and Page 12 for Measuring range of AKS 4100/4100U - CABLE version and COAXIAL version.

For details of gas constant values for different temperatures and refrigerants plus the procedure for entering these via the HMI, refer to Page 23 and Page 24.

Figure 8: Measuring principle (Cable and Coaxial)

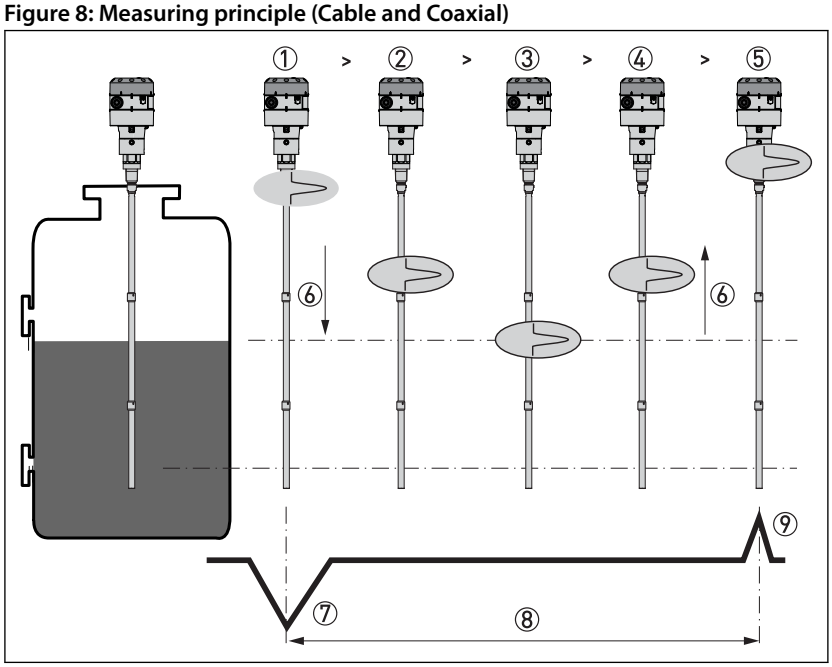

1	The electromagnetic (EM) pulse is transmitted by the signal converter
2	The pulse goes down the probe at the speed of light in air, V1
3	The pulse is reflected
4	The pulse goes up the probe at speed, V1
5	The converter receives the pulse and records the signal
6	The EM pulse moves at speed, V1
7	Transmitted EM pulse
8	Half of this time is equivalent to the distance from the reference point of the device (the flange facing) to the surface of the product
9	Received EM pulse

Measuring range of AKS 4100/4100U - CABLE version

Figure 9: Measuring range of AKS 4100/4100U - CABLE version

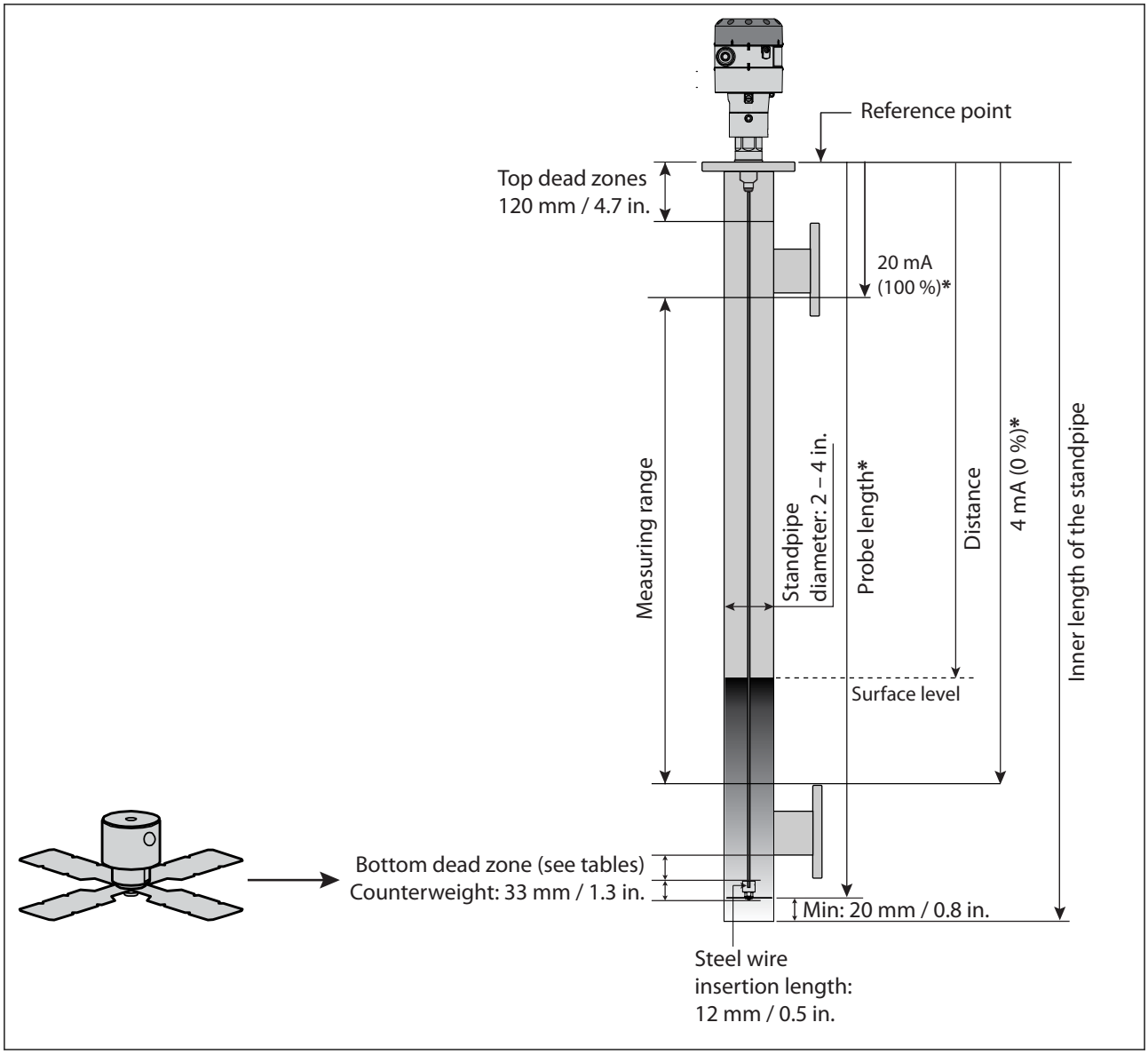

NOTE:

* Values to be entered into HMI Quick Setup menu and recorded on the setting label. Stick the setting label onto the Signal Converter either inside or outside.

Table 13: Bottom deadzone values based on the factory setting of dielectric constant

Refrigerant	Probe length range		Bottom dead zone	
	[mm]	[in.]	[mm]	[in.]
Ammonia, HFC, HCFC	800	31.5	115	4.2
	801 – 999	31.5 – 39	120	4.7
	1000 – 1999	39 – 79	150	5.9
	2000 – 2999	79 – 118	180	7.1
	3000 – 3999	118 – 157	210	8.3
	4000 – 5000	157 – 197	240	9.4

Table 14: Improved Bottom dead zone values after the adjustment of dielectric constant

Refrigerant	Probe length range		Bottom dead zone	
	[mm]	[in.]	[mm]	[in.]
Ammonia, HFC, HCFC	800 – 5000	31.5 – 197	90	3.5

Measuring range of AKS 4100/4100U - COAXIAL D14 version

Figure 10: Measuring range of AKS 4100/4100U - COAXIAL D14 version

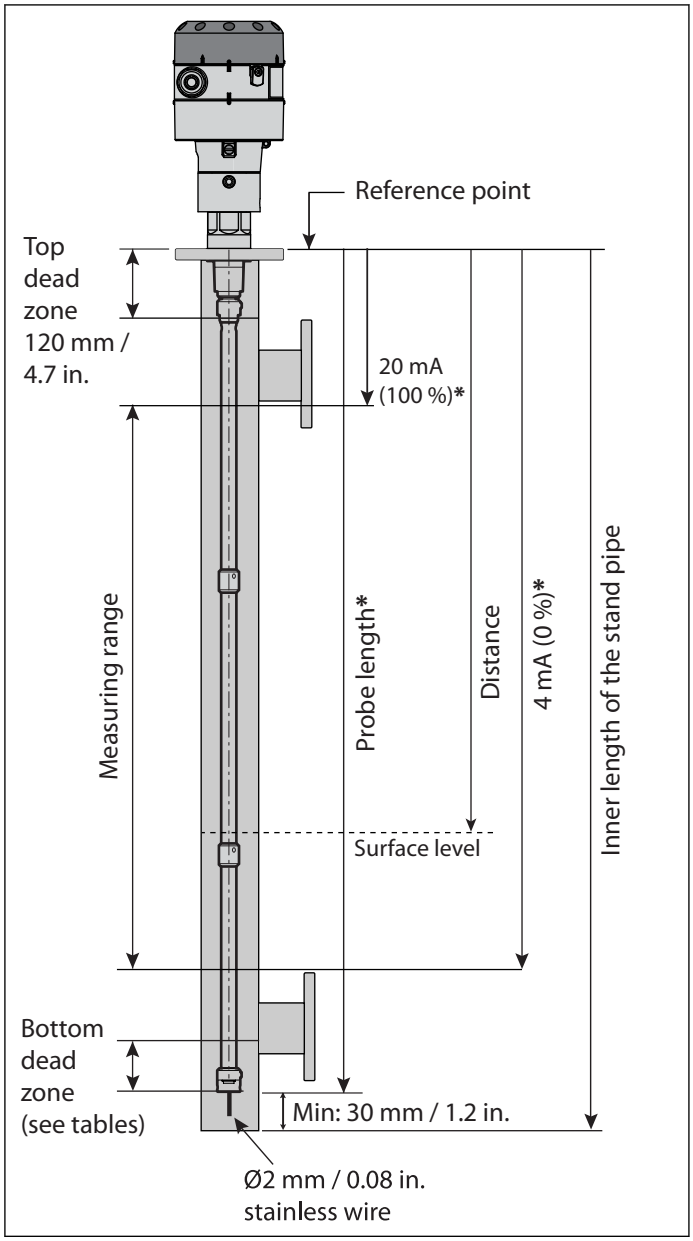

NOTE:
* Values to be entered into HMI Quick Setup menu and recorded on the setting label. Stick the setting label onto the Signal Converter either inside or outside.

AKS 4100

Table 15: Dielectric Constant εr always set during Quick Setup

Refrigerant	Probe length		Bottom Dead Zone	Bottom Dead Zone
	[mm]	[in.]	[mm]	[in.]
CO_2	500	19.7	170	6.7
	800	31.5		
	1000	39.4		
	1200	47.2		
	1500	59.1		
	1700	66.9		
	2200	86.6		

Table 16: Factory setting

Refrigerant	Probe length		Bottom Dead Zone	Bottom Dead Zone
	[mm]	[in.]	[mm]	[in.]
Ammonia	500	19.7	95	3.7
	800	31.5	104	4.1
	1000	39.4	110	4.3
	1200	47.2	116	4.6
	1500	59.1	125	4.9
	1700	66.9	131	5.2
	2200	86.6	146	5.8

Table 17: Improved Bottom dead zone values after the adjustment of dielectric constant

Refrigerant	Probe length		Bottom Dead Zone	Bottom Dead Zone
	[mm]	[in.]	[mm]	[in.]
Ammonia	500	19.7	80	3.2
	800	31.5		
	1000	39.4		
	1200	47.2		
	1500	59.1		
	1700	66.9		
	2200	86.6		

Table 18: Factory setting

Refrigerant	Probe length		Bottom Dead Zone	Bottom Dead Zone
	[mm]	[in.]	[mm]	[in.]
HCFC,HFC	500	19.7	115	4.5
	800	31.5	124	4.9
	1000	39.4	130	5.1
	1200	47.2	136	5.4
	1500	59.1	145	5.7
	1700	66.9	151	5.9
	2200	86.6	166	6.5

Table 19: Improved Bottom dead zone values after the adjustment of dielectric constant

Refrigerant	Probe length		Bottom Dead Zone	Bottom Dead Zone
	[mm]	[in.]	[mm]	[in.]
HCFC,HFC	500	19.7	100	3.9
	800	31.5		
	1000	39.4		
	1200	47.2		
	1500	59.1		
	1700	66.9		
	2200	86.6		

NOTE:

It is mandatory to input dielectric constant for CO_2 applications.

AKS 4100U

Table 20: Dielectric Constant εr always set during Quick Setup

Refrigerant	Probe Length	Bottom Dead Zone	Bottom Dead Zone
	[in.]	[in.]	[mm]
CO_2	19.2	6.7	170
	30		
	45		
	55		
	65		
	85		

Table 21: Factory setting

Refrigerant	Probe Length	Bottom Dead Zone	Bottom Dead Zone
	[in.]	[in.]	[mm]
Ammonia	19.2	3.73	95
	30	4.05	103
	45	4.5	114
	55	4.8	122
	65	5.1	130
	85	5.7	145

Table 22: Improved Bottom dead zone values after the adjustment of dielectric constant

Refrigerant	Probe Length	Bottom Dead Zone	Bottom Dead Zone
	[in.]	[in.]	[mm]
Ammonia	19.2	3.1	80
	30		
	45		
	55		
	65		
	85		

Table 23: Factory setting

Refrigerant	Probe Length	Bottom Dead Zone	Bottom Dead Zone
	[in.]	[in.]	[mm]
HCFC,HFC	19.2	4.52	115
	30	4.84	123
	45	5.29	134
	55	5.59	142
	65	5.89	150
	85	6.49	165

Table 24: Improved Bottom dead zone values after the adjustment of dielectric constant

Refrigerant	Probe Length	Bottom Dead Zone	Bottom Dead Zone
	[in.]	[in.]	[mm]
HCFC,HFC	19.2	3.94	100
	30		
	45		
	55		
	65		
	85		

NOTE:

It is mandatory to input dielectric constant for CO_2 applications.

Measuring range of AKS 4100/4100U - COAXIAL D22 version

Figure 11: Measuring range of AKS 4100/4100U - COAXIAL D22 version

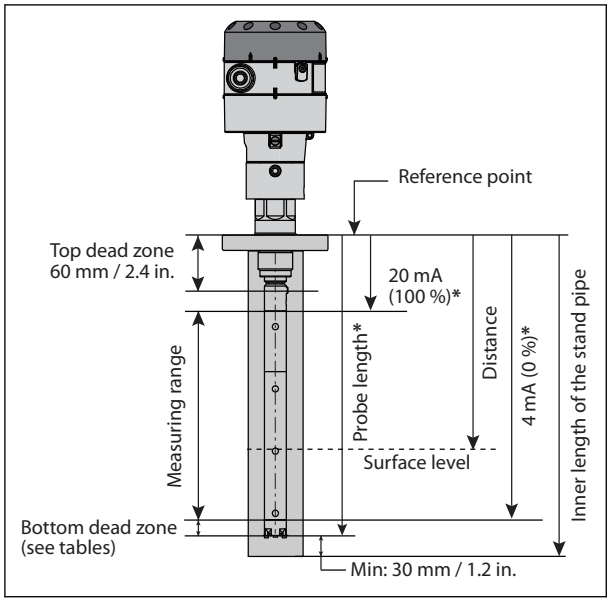

NOTE:
* Values to be entered into HMI Quick Setup menu and recorded on the setting label. Stick the setting label onto the Signal Converter either inside or outside.

AKS 4100

Table 25: Factory setting

Refrigerant	Probe length		Bottom Dead Zone	Bottom Dead Zone
	[mm]	[in.]	[mm]	[in.]
Ammonia	280	11	48	1.9

Table 26: Improved Bottom dead zone values after the adjustment of dielectric constant

Refrigerant	Probe length		Bottom Dead Zone	Bottom Dead Zone
	[mm]	[in.]	[mm]	[in.]
Ammonia	280	11	40	1.6

AKS 4100U

Table 27: Factory setting

Refrigerant	Probe Length	Bottom Dead Zone	Bottom Dead Zone
	[in.]	[in.]	[mm]
Ammonia	11	1.9	48

Table 28: Improved Bottom dead zone values after the adjustment of dielectric constant

Refrigerant	Probe Length	Bottom Dead Zone	Bottom Dead Zone
	[in.]	[in.]	[mm]
Ammonia	11	1.6	40

Connections

Mechanical connection
Cable version / Coaxial version:

- AKS 4100
  - G1 in. pipe thread
  - Aluminium gasket included
- AKS 4100U
  - ¾ in. NPT

Dimensions and weights

CABLE version

Table 29: CABLE version

Weight: approx. 2.3 kg / 5.1 lbs
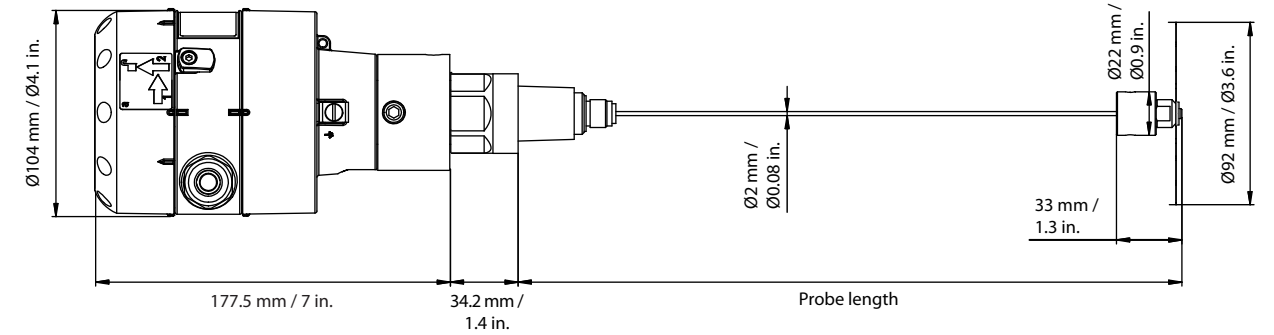

COAXIAL D14 version

Table 30: Coaxial D14 version

Weight: approx. 3.8 kg / 8.4 lbs
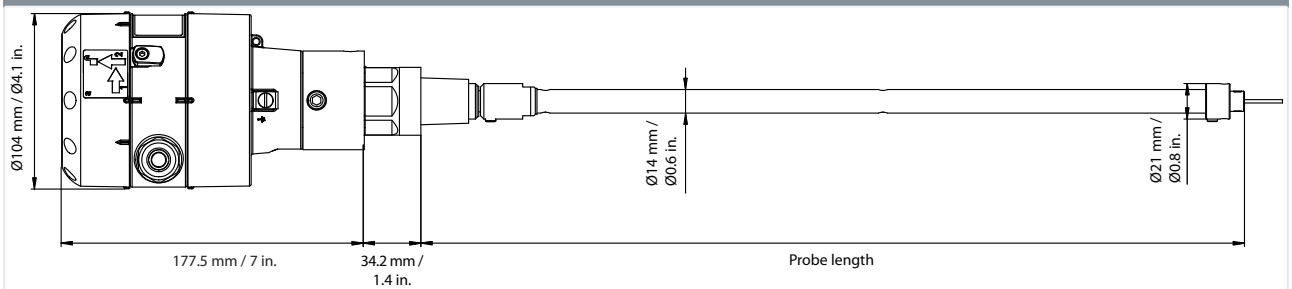

COAXIAL D22 version

Table 31: Coaxial D22 version

Weight: 2.4 kg / 5.3 lbs
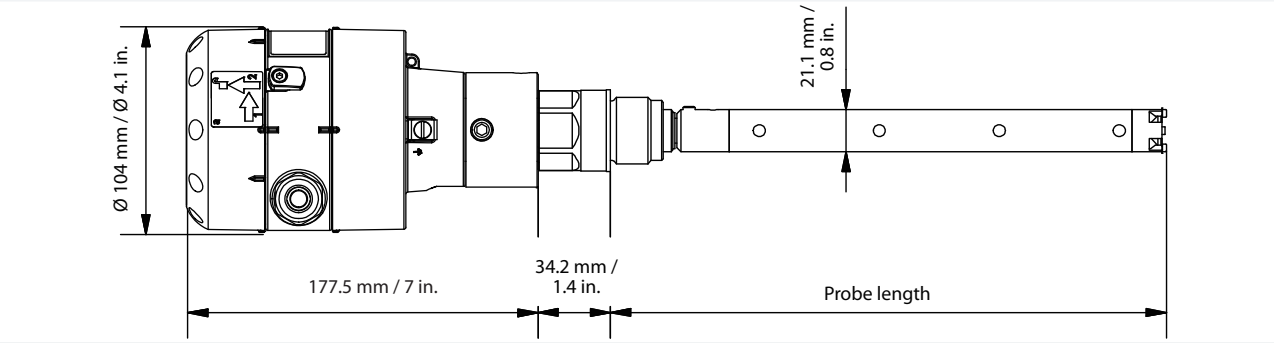

Ordering

Cable version

Figure 12: Cable version

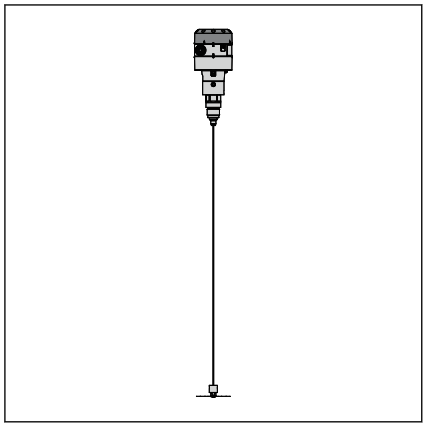

Table 32: Cable version

Description	Refrigerant	Code number with HMI English (default) German French Spanish	Code number with HMI English (default) Japanese Chinese Russian	Code number Without HMI*
AKS 4100 with 5 m / 197 in., Ø2 mm / Ø0.08 in. stainless cable and counterweight	Ammonia, R134A, R404A, R410A, R22	084H4501	084H4550	084H4500
AKS 4100U with 5 m / 197 in., Ø2 mm / Ø0.08 in. stainless cable and counterweight	Ammonia, R134A, R404A, R410A, R22	084H4521	084H4571	084H4520

Coaxial version (available in predefined lengths, with or without HMI)

Figure 13: Coaxial version D14

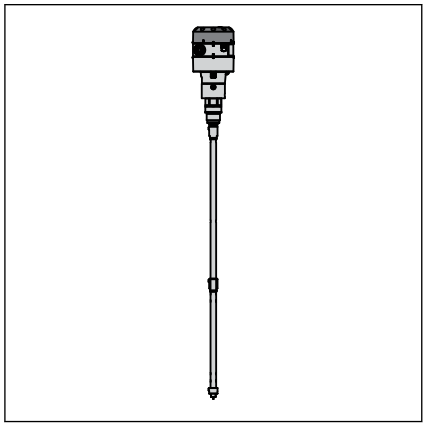

Figure 14: Coaxial version D22

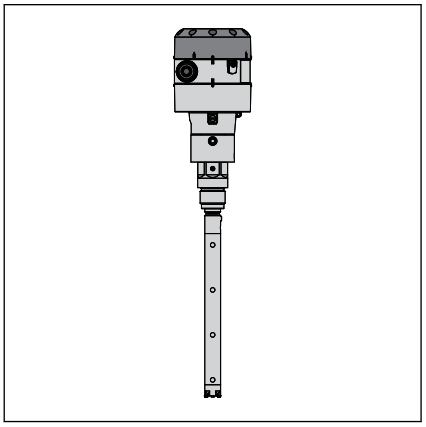

Table 33: Coaxial version - D14

Description	Probe length		Refrigerant	Code number with HMI English (default) German French Spanish	Code number with HMI English (default) Japanese Chinese Russian	Code number Without HMI*
	mm	in.				
AKS 4100 - Coaxial D14	500		Ammonia, CO_2, R134A, R404A, R410A, R22	084H4510	084H4560	084H4503
AKS 4100 - Coaxial D14	800		Ammonia, CO_2, R134A, R404A, R410A, R22	084H4511	084H4561	084H4504
AKS 4100 - Coaxial D14	1000		Ammonia, CO_2, R134A, R404A, R410A, R22	084H4512	084H4562	084H4505
AKS 4100 - Coaxial D14	1200		Ammonia, CO_2, R134A, R404A, R410A, R22	084H4513	084H4563	084H4506
AKS 4100 - Coaxial D14	1500		Ammonia, CO_2, R134A, R404A, R410A, R22	084H4514	084H4564	084H4507
AKS 4100 - Coaxial D14	1700		Ammonia, CO_2, R134A, R404A, R410A, R22	084H4515	084H4565	084H4508
AKS 4100 - Coaxial D14	2200		Ammonia, CO_2, R134A, R404A, R410A, R22	084H4516	084H4566	084H4509

Description	Probe length		Refrigerant	Code number with HMI English (default) German French Spanish	Code number with HMI English (default) Japanese Chinese Russian	Code number Without HMI*
	mm	in.				
AKS 4100U - Coaxial D14		19.2	Ammonia, CO_2, R134A, R404A, R410A, R22	084H4530	084H4580	084H4524
AKS 4100U - Coaxial D14		30	Ammonia, CO_2, R134A, R404A, R410A, R22	084H4531	084H4581	084H4525
AKS 4100U - Coaxial D14		45	Ammonia, CO_2, R134A, R404A, R410A, R22	084H4532	084H4582	084H4526
AKS 4100U - Coaxial D14		55	Ammonia, CO_2, R134A, R404A, R410A, R22	084H4533	084H4583	084H4527
AKS 4100U - Coaxial D14		65	Ammonia, CO_2, R134A, R404A, R410A, R22	084H4534	084H4584	084H4528
AKS 4100U - Coaxial D14		85	Ammonia, CO_2, R134A, R404A, R410A, R22	084H4535	084H4585	084H4529

Table 34: Coaxial version - D22

Description	Probe length		Refrigerant	Code number with HMI English (default) German French Spanish	Code number with HMI English (default) Japanese Chinese Russian	Code number Without HMI*
	mm	in.				
AKS 4100 - Coaxial D22	280		Ammonia	084H4517	084H4567	084H4518
AKS 4100U - Coaxial D22		11	Ammonia	084H4536	084H4586	084H4537
AKS 4100 - Coaxial D22	280		CO_2, R134A, R404A, R410A, R22	084H4572	084H4573	084H4574
AKS 4100U - Coaxial D22		11	CO_2, R134A, R404A, R410A, R22	084H4575	084H4576	084H4577

HMI display unit

When ordering without HMI please observe:
NOTE: **Each AKS 4100/AKS 4100 must always be programmed via the HMI display unit.**

The HMI display unit can be ordered separately:

- **084H4540 / 084H4590** AKS 4100/4100U HMI display unit with rear cover and mounting bracket. The mounting bracket is very useful when the AKS 4100/4100U have to be programmed. The same AKS 4100/4100U HMI display unit can be used to programme more AKS 4100/4100U and both Cable and Coaxial versions.
- **084H4548 / 084H4598** AKS 4100/4100U HMI display unit (usually spare part).

Accessories

Table 35: Accessories

AKS 4100/4100U excluding cable gland	HMI Service/Display unit
a) 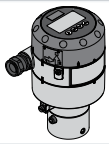	b)  c) 

Table 36: Accessories

Description	Code number with HMI English (default) German French Spanish	Code number with HMI English (default) Japanese Chinese Russian
AKS 4100/4100U HMI Service/Display unit with rear cover and mounting bracket - **c)**	084H4540	084H4590
AKS 4100/4100U HMI Display - **b)**	084H4548	084H4598
AKS 4100/4100U Signal Converter + Metaglass with HMI, excluding cable gland - **a)**	084H4555	084H4556
AKS 4100/4100U converter connecting cable (5 pcs.)	084H4557	

Service kits

Table 37: Service kits

Cable and counterweight - CABLE version	End connector incl screws - COAXIAL D14 version	Process connection, counterweight and cable
a) 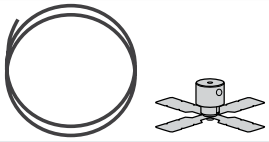	b) 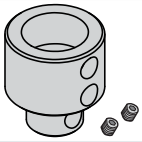	c) 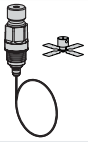

Table 38: Service kits

Description	Content	Code number
Cable and counterweight for AKS 4100/4100U - CABLE version - **a)**	Cable - 5 m / 197 in., Ø2 mm / Ø0.08 in.	084H4542
	Crimp	
	Counterweight	
End connector incl screws for AKS 4100/4100U - COAXIAL D14 version - **b)**	End connector (incl. 3 mm / 0.12 in. set screws)	084H4549
Process connection, counterweight and 5 m / 197 in., Ø2 mm / Ø0.08 in. cable for AKS 4100 - CABLE and COAXIAL D14 version - **c)**	1 in. process connection	084H4545
	Counterweight	
Process connection, counterweight and 5 m / 197 in., Ø2 mm / Ø0.08 in. cable for AKS 4100U - CABLE and COAXIAL D14 version - **c)**	¾ in. NPT process connection	084H4546
	Counterweight	

Other spare parts

Table 39: Other spare parts

Other spare parts			
a)	b) 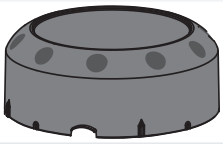	c) 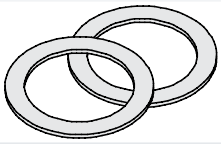	d) 

Table 40: Other spare parts

Description	Code number
AKS 4100/4100U Coaxial tube. Tube length: 680 mm / 26.8 in. - **a)**	084H4543
AKS 4100/4100U blank top cover for signal converter - **b)**	084H4544
AKS 4100/4100U Aluminium gaskets (10 pcs.) for 1 in. process connection - **c)**	084H4547
AKS 4100 1 in. welding connection	027F1010
Process connection AKS 4100 - Coaxial D22 - G1 in. - 280 mm. For Ammonia only - **d)**	084H4551
Process connection AKS 4100U - Coaxial D22 - ¾ in. NPT – 11 in. For Ammonia only - **d)**	084H4552
Process connection AKS 4100 - Coaxial D22 - G1 in. - 280 mm. For CO_2, R134A, R404A, R410A, R22 only - **d)**	084H4558
Process connection AKS 4100 - Coaxial D22 - ¾ in. NPT – 11 in. For CO_2, R134A, R404A, R410A, R22 only - **d)**	084H4559

Quick setup

Table 41: Quick Setup

Quick Setup (all values below are only examples)

- Connect the device to the power supply (see the section "Electrical installation/ connection").
- Press (›) 3 times .

```
AKS 4100
QUICK SETUP ?
YES        NO
```

- Press (›)

```
AKS 4100
PROBE TYPE
SINGLE CABLE
```

- Press (▼) or (▲) to select between SINGLE, COAXIAL D14 and COAXIAL D22.
  Choose **SINGLE** and press (↵) to confirm.

```
AKS 4100
PROBE LENGTH
05000 mm
```

- Press (›) to change the PROBE LENGTH.
  Press (›) to change the position of the cursor.
  Press (▼) to decrease the value or (▲) to increase the value.
  Press (↵) to confirm.

```
AKS 4100
SCALE 4 mA
04946 mm
```

- Press (›) to change of SCALE 4 mA.
  Press (›) to change the cursor position.
  Press (▼) to decrease the value or (▲) to increase the value.
  Press (↵) to confirm.

```
AKS 4100
SCALE 20 mA
00070 mm
```

- Press (›) to change of SCALE 20 mA.
  Press (›) to change the cursor position.
  Press (▼) to decrease the value or (▲) to increase the value.
  Press (↵) to confirm.

```
AKS 4100
QUICK SETUP
COMPLETED IN 8
```

- Wait for QUICK SETUP to complete 8-second timeout

```
AKS 4100
1.0.0
QUICK SETUP
```

- Press (↵) to confirm.

```
AKS 4100
1.0.0
STORE NO
```

- Press (▼) or (▲) to select either STORE NO or STORE YES.
  Press (↵) to confirm.

Default screen appears:

```
AKS 4100
DISTANCE
5000 mm
```

Quick Setup completed

You have the possibility of checking your settings by pressing (›) twice.

```
AKS 4100
SINGLE CABLE        5000 mm
(0%) 4 mA           4877 mm
(100%) 20 mA        120 mm
```

Press (↵) (▲) (↵) to return to default screen.

NOTE:
The signal converter can be programmed with or without mechanical process connector assembled.

When CO2 is used:

Table 42: Quick Setup (all values below are only examples)

Quick Setup (all values below are only examples)		
• Connect the device to the power supply (see the section "Electrical installation/ connection"). • Press (›) 3 times . AKS 4100 QUICK SETUP ? YES NO • Press (›) AKS 4100 PROBE TYPE SINGLE CABLE • Press (▼) or (▲) to select between SINGLE, COAXIAL D14 and COAXIAL D22. Choose **COAXIAL D14** and press (↵) to confirm. AKS 4100 LIQUID CO2 ? YES NO • Press (›) (YES) to confirm AKS 4100 GAS EPS R ? 001.000 • Press (›) to change GAS EPS.R. (Select the correct value from the tables on page 8) Press (›) to change cursor-position. Press (▼) to decrease the value or (▲) to increase the value.	• Press (↵) to confirm. AKS 4100 PROBE LENGTH 05000 mm • Press (›) to change the PROBE LENGTH. Press (›) to change the position of the cursor. Press (▼) to decrease the value or (▲) to increase the value. Press (↵) to confirm. AKS 4100 SCALE 4 mA 04946 mm • Press (›) to change of SCALE 4 mA. Press (›) to change the cursor position. Press (▼) to decrease the value or (▲) to increase the value. Press (↵) to confirm. AKS 4100 SCALE 20 mA 00070 mm • Press (›) to change of SCALE 20 mA. Press (›) to change the cursor position. Press (▼) to decrease the value or (▲) to increase the value. Press (↵) to confirm.	AKS 4100 QUICK SETUP COMPLETED IN 8 • Wait for QUICK SETUP to complete. Count down from 8 sec. AKS 4100 1.0.0 QUICK SETUP • Press (↵) to confirm. AKS 4100 1.0.0 STORE NO • Press (▼) or (▲) to select between STORE NO or STORE YES. Press (↵) to confirm. Default screen appears: AKS 4100 DISTANCE 5000 mm **Quick Setup completed** You have the possibility of checking your settings by pressing (›) twice. AKS 4100 COAXIAL D14 2200 mm (0 %) 4 mA 1900 mm (100 %) 20 mA 70 mm Press (↵) (▲) (↵) to return to default screen.

NOTE:
The signal converter can be programmed with or without mechanical process connector assembled.

For all other refrigerants

Table 43: For all other refrigerants

For all other refrigerants

- Connect the device to the power supply (see the section "Electrical installation/ connection").
- Press (›) 3 times .

```
AKS 4100
QUICK SETUP ?
YES          NO
```

- Press (›)

```
AKS 4100
PROBE TYPE
SINGLE CABLE
```

- Press (▼) or (▲) to select between SINGLE, COAXIAL D14 and COAXIAL D22. Choose **COAXIAL D14** and press (↵) to confirm.

```
AKS 4100
LIQUID CO2 ?
YES          NO
```

- Press (▲) (NO) to confirm

```
AKS 4100
PROBE LENGTH
05000 mm
```

- Press (›) to change the PROBE LENGTH. Press (›) to change the position of the cursor. Press (▼) to decrease the value or (▲) to increase the value. Press (↵) to confirm.

```
AKS 4100
SCALE 4 mA
04946 mm
```

- Press (›) to change of SCALE 4 mA. Press (›) to change the cursor position. Press (▼) to decrease the value or (▲) to increase the value. Press (↵) to confirm.

```
AKS 4100
SCALE 20 mA
00070 mm
```

- Press (›) to change of SCALE 20 mA. Press (›) to change the cursor position. Press (▼) to decrease the value or (▲) to increase the value. Press (↵) to confirm.

```
AKS 4100
QUICK SETUP
COMPLETED IN 8
```

- Wait for QUICK SETUP to complete. Count down from 8 sec.

```
AKS 4100
1.0.0
QUICK SETUP
```

- Press (↵) to confirm.

```
AKS 4100
1.0.0
STORE NO
```

- Press (▼) or (▲) to select between STORE NO or STORE YES. Press (↵) to confirm.

Default screen appears:

```
AKS 4100
DISTANCE
5000 mm
```

Quick Setup completed

NOTE:
Please note that Coaxial D22 version can only be used in R717/NH_3)

CABLE and COAXIAL version

Table 44: CABLE and COAXIAL version

Forcing mA output (all values below are only examples)		
Default screen AKS 4100 DISTANCE 5000 mm • Press ⊕ AKS 4100 1.0.0 QUICK SETUP • Press ⊕ AKS 4100 2.0.0 SUPERVISOR • Press ⊕ AKS 4100 2.0.0 _____ Enter password: ⊕ ⊕ ⊕ ⊕ ⊕ ⊕ AKS 4100 2.1.0 INFORMATION	• Press ⊕ AKS 4100 2.2.0 TESTS • Press ⊕ AKS 4100 2.2.1 SET OUTPUT • Press ⊕ AKS 4100 SET OUTPUT 3.5 mA • Press ⊕ to decrease the value or ⊕ to increase the value. Press ⊕ to confirm. AKS 4100 SET OUTPUT 8 mA	• Press ⊕4 times to return to default screen. Default screen appears: AKS 4100 DISTANCE 5000 mm **Force mA completed and disabled**

Entering refrigerant dielectric gas constant

Optional Procedure

Optional Procedure If the temperature condition in the stand pipe is known, a constant (dielectric constant of the refrigerant gas) can be entered (parameter 2.5.3 GAS EPS.R), in order to obtain lower Top and Bottom Dead Zone values (see Measuring range of AKS 4100/4100U - CABLE version and Measuring range of AKS 4100/4100U - COAXIAL D14 version).

Table 45: Entering refrigerant dielectric gas constant

Entering refrigerant dielectric gas constant (all values below are only examples)

Default screen

```
AKS 4100
DISTANCE
5000 mm
```

- Press ⊙

```
AKS 4100
1.0.0
QUICK SETUP
```

- Press ⊙

```
AKS 4100
2.0.0
SUPERVISOR
```

- Press ⊙

```
AKS 4100
2.0.0
_________
```

Enter password:

⊙ ⊙ ⊙ ⊙ ⊙ ⊙

```
AKS 4100
2.1.0
INFORMATION
```

- Press ⊙ 4 times .

```
AKS 4100
2.5.0
APLICATION
```

- Press ⊙

```
AKS 4100
2.5.1
TRACING VEL.
```

- Press ⊙ 2 times .

```
AKS 4100
2.5.3
GAS EPS. R
```

- Press ⊙ to change GAS EPS.R. (Select the correct value from the tables on page 16)
  Press ⊙ to change cursor-position.
  Press ⊙ to decrease the value or ⊙ to increase the value.

```
AKS 4100
GAS EPS. R
1.066
```

- Press ⊙ to confirm.

```
AKS 4100
2.5.3
GAS EPS. R
```

- Press ⊙ 3 times .

```
AKS 4100
1.0.0
STORE NO
```

- Press ⊙ or ⊙ to select between STORE NO or STORE YES.
  Select STORE YES by pressing ⊙

Default screen appears:

```
AKS 4100
DISTANCE
5000 mm
```

Entering the dielectric constant of refrigerant gas completed

Saturated vapour dielectric constant (default value: 1.066)

Temperature range: -60 / +50 °C (-76 / +122 °F)

Table 46: R717 (NH_3)

Temperature [°C]	Temperature [°F]	Dielectric constant of refrigerant gas Parameter 2.5.3 GAS EPS.R
-60 – -42	-76 – -43	1
-41 – -18	42 – 0	1.01
-17 – -5	1 – 23	1.02
-4 – 4	24 – 39	1.03
5 – 12	40 – 54	1.04
13 – 18	55 – 64	1.05
19 – 24	65 – 75	1.06
25 – 28	76 – 82	1.07
29 – 33	83 – 91	1.08
34 – 37	92 – 99	1.09
38 – 40	100 – 104	1.1
41 – 44	105 – 111	1.11
45 – 47	112 – 117	1.12
48 – 50	118 – 122	1.13

Temperature range: -60 / +48 °C (-76 / +118 °F)

Table 47: R22

Temperature [°C]	Temperature [°F]	Dielectric constant of refrigerant gas Parameter 2.5.3 GAS EPS.R
-60 – -50	-76 – -58	1
-49 – -25	57 – -13	1.01
-24 – -10	-12 – 14	1.02
-9 – 0	15 – 32	1.03
1 – 8	33 – 46	1.04
9 – 15	47 – 59	1.05

Temperature [°C]	Temperature [°F]	Dielectric constant of refrigerant gas Parameter 2.5.3 GAS EPS.R
16 – 21	60 – 70	1.06
22 – 26	71 – 79	1.07
27 – 31	80 – 88	1.08
32 – 35	89 – 95	1.09
36 – 39	96 – 102	1.1
40 – 42	103 – 108	1.11
43 – 45	109 – 113	1.12
46 – 48	114 – 118	1.13

Temperature range: -65 / +15 °C (-85 / +59 °F)

Table 48: R410A

Temperature [°C]	Temperature [°F]	Dielectric constant of refrigerant gas Parameter 2.5.3 GAS EPS.R
-65 – -47	-85 – -52	1.01
-46 – -35	-51 – -31	1.02
-34 – -26	-30 – -14	1.03
-25 – -19	-13 – -2	1.04
-18 – -13	-1 – 9	1.05
-12 – -8	10 – 18	1.06
-7 – -4	19 – 25	1.07
-3 – 0	26 – 32	1.08
1 – 4	33 – 40	1.09
5 – 7	41 – 45	1.1
8 – 10	46 – 50	1.11
11 – 12	51 – 54	1.12
13 – 15	55 – 59	1.13

Temperature range: -60 / +15 °C (-76 / +59 °F)

Table 49: R507

Temperature [°C]	Temperature [°F]	Dielectric constant of refrigerant gas Parameter 2.5.3 GAS EPS.R
-60 – -48	-76 – -54	1.01
-47 – -36	-53 – -32	1.02
-35 – -28	-31 – -18	1.03
-27 – -21	-17 – -6	1.04
-20 – -15	-17 – -5	1.05
-14 – -10	-4 – 14	1.06
-9 – -6	13 – 22	1.07
-5 – -2	23 – 29	1.08
-1 – 2	30 – 36	1.09
3 – 5	37 – 41	1.1
6 – 8	42 – 47	1.11
9 – 11	48 – 52	1.12
12 – 13	53 – 56	1.13
14 – 15	57 – 59	1.14

Temperature range: -56 / +15 °C (-69 / +59 °F)

Table 50: R744 (CO_2)

Temperature [°C]	Temperature [°F]	Dielectric constant of refrigerant gas Parameter 2.5.3 GAS EPS.R
-56.0 – -42.0	-69 – -43	1.01
-41.0 – -28.0	-42 – -18	1.02
-27.0 – -17.0	-17 – 2	1.03
-16.0 – -9.0	3 – 16	1.04
-8.0 – -3.0	17 – 27	1.05
-2.0 – 2	28 – 36	1.06
3 – 7	37 – 45	1.07

Temperature [°C]	Temperature [°F]	Dielectric constant of refrigerant gas Parameter 2.5.3 GAS EPS.R
8 – 11	46 – 52	1.08
12 – 14	53 – 58	1.09
15	59	1.1

Temperature range: -60 / +50 °C (-76 / + 122 °F)

Table 51: R134a

Temperature [°C]	Temperature [°F]	Dielectric constant of refrigerant gas Parameter 2.5.3 GAS EPS.R
-60 – -42	-76 – -43	1
-41 – -18	-42 – -0	1.01
-17 – -4	1 – 25	1.02
-3 – 5	26 – 41	1.03
6 – 13	42 – 56	1.04
14 – 20	57 – 68	1.05
21 – 25	69 – 77	1.06
26 – 30	78 – 86	1.07
31 – 34	87 – 94	1.08
35 – 38	95 – 100	1.09
39 – 42	101 – 108	1.1
43 – 45	109 – 113	1.11
46 – 48	114 – 119	1.12
49 – 50	120 – 122	1.13

Temperature range: -60 / +15 °C (-76 / +59 °F)

Table 52: R404A

Temperature [°C]	Temperature [°F]	Dielectric constant of refrigerant gas Parameter 2.5.3 GAS EPS.R
-60 – -47	-76 – -52	1.01
-46 – -35	-51 – -31	1.02
-34 – -26	-30 – -14	1.03
-25 – -19	-13 – -2	1.04
-18 – -14	-1 – 7	1.05
-13 – -9	8 – 16	1.06
-8 – -4	17 – 25	1.07
-3 – 0	26 – 32	1.08
1 – 3	33 – 38	1.09
4 – 6	39 – 43	1.1
7 – 9	44 – 49	1.11
10 – 12	50 – 54	1.12
13 – 15	55 – 59	1.13

How to change the language setting (Default: English)

Table 53: How to change the language setting

How to change the language setting (Default: English)		
Default screen AKS 4100 DISTANCE 5000 mm • Press ⊕ AKS 4100 1.0.0 QUICK SETUP • Press ⊕ AKS 4100 2.0.0 SUPERVISOR • Press ⊕ AKS 4100 2.0.0 _____	Enter password: ⊕ ⊕ ⊕ ⊕ ⊕ ⊕ AKS 4100 2.1.0 INFORMATION • Press ⊕ 6 times AKS 4100 2.7.0 DISPLAY • Press ⊕ AKS 4100 2.7.1 LANGUAGE • Press ⊕ AKS 4100 LANGUAGE ENGLISH	• Press ⊕ or ⊕ to see the language possibilities Press ⊕ to confirm. AKS 4100 2.7.1 LANGUAGE • Press ⊕ 3 times AKS 4100 2.0.0 STORE NO • Press ⊕ or ⊕ to select between STORE NO or STORE YES. Select STORE YES by pressing ⊕ Default screen appears: AKS 4100 DISTANCE 5000 mm **Language setup completed**

Reset to factory setting

- Go to SUPERVISOR menu (see CABLE and COAXIAL version)
- Go to parameter 2.9.4 Reset Factory
- Select RESET FACTORY YES
- Press ⊕ 3 times to return to default screen
- **Factory reset completed**

Certificates, declarations, and approvals

The list contains all certificates, declarations, and approvals for this product type. Individual code number may have some or all of these approvals, and certain local approvals may not appear on the list.

Some approvals may change over time. You can check the most current status at danfoss.com or contact your local Danfoss representative if you have any questions.

Table 54: Valid approvals

File name	Document type	Document topic	Approval authority
GOST FR.C.29.004.A 51938	Measuring - Performance Certificate		
UA.1O146.D.00075-19	UA Declaration	EMCD/LVD	LLC CDC EURO-TYSK
033F0689.AA	EU Declaration	EMC	Danfoss
MD 033F0686.AH	Manufacturers Declaration	PED	Danfoss
033F0695.AA	Manufacturers Declaration	China RoHS	Danfoss
0F18749.513467890YTN	Pressure - Safety Certificate	CRN	TSSA
0F19272.2	Pressure - Safety Certificate	CRN	TSSA

Table 55: Approvals and certification

CE	This device fufills the statutory requirements of the EMC directives. The manufacturer certifies successful testing of the product by applying the CE mark.
	Valid for AKS 4100 - **Not valid for AKS 4100U:** Pattern Approval Certificate of Measuring Instruments for the Russian Federation
EAC	Valid for AKS 4100 - **Not valid for AKS 4100U:** In compliance with EMC regulations in the Russian Federation
EMC	EMC Directives 2004 / 108 / EC and 93 / 68 / EEC in conjunction with EN 61326-1 (2006) and EN 61326-2-3 (2006). The device conforms to these standards if: - the device has a coaxial probe or - the device has a single probe that is installed in a metallic tank
LVD	Low-Voltage Directives 2006 / 95 / EC and 93 / 68 / EEC in conjunction with EN 61010-1 (2001)
NAMUR	NAMUR NE 21 Electromagnetic Compatibility (EMC) of Industrial Process and Laboratory Control Equipment
	NAMUR NE 43 Standardization of the Signal Level for the Failure Information of Digital Transmitters

ENGINEERING
TOMORROW

Online support

Danfoss offers a wide range of support along with our products, including digital product information, software, mobile apps, and expert guidance. See the possibilities below.

The Danfoss Product Store

The Danfoss Product Store is your one-stop shop for everything product related—no matter where you are in the world or what area of the cooling industry you work in. Get quick access to essential information like product specs, code numbers, technical documentation, certifications, accessories, and more.
Start browsing at store.danfoss.com.

Find technical documentation

Find the technical documentation you need to get your project up and running. Get direct access to our official collection of data sheets, certificates and declarations, manuals and guides, 3D models and drawings, case stories, brochures, and much more.

Start searching now at www.danfoss.com/en/service-and-support/documentation.

Danfoss Learning

Danfoss Learning is a free online learning platform. It features courses and materials specifically designed to help engineers, installers, service technicians, and wholesalers better understand the products, applications, industry topics, and trends that will help you do your job better.

Create your Danfoss Learning account for free at www.danfoss.com/en/service-and-support/learning.

Get local information and support

Local Danfoss websites are the main sources for help and information about our company and products. Find product availability, get the latest regional news, or connect with a nearby expert—all in your own language.

Find your local Danfoss website here: www.danfoss.com/en/choose-region.

Spare Parts

Get access to the Danfoss spare parts and service kit catalog right from your smartphone. The app contains a wide range of components for air conditioning and refrigeration applications, such as valves, strainers, pressure switches, and sensors.

Download the Spare Parts app for free at www.danfoss.com/en/service-and-support/downloads.

Coolselector®2 - find the best components for you HVAC/R system

Coolselector®2 makes it easy for engineers, consultants, and designers to find and order the best components for refrigeration and air conditioning systems. Run calculations based on your operating conditions and then choose the best setup for your system design.

Download Coolselector®2 for free at coolselector.danfoss.com.

Danfoss A/S
Climate Solutions • danfoss.com • +45 7488 2222