At the end of this document you will find links to products related to this catalog. You can go directly to our shop by clicking HERE. HERE

Ferrule - AI 10 -12 IV - 3201068

Please be informed that the data shown in this PDF Document is generated from our Online Catalog. Please find the complete data in the user's documentation. Our General Terms of Use for Downloads are valid
(http://phoenixcontact.com/download)

Ferrule, Sleeve length: 12 mm, Length: 22 mm, Color: ivory

Why buy this product

- The AI 0,25... can also be used to process 0.14 mm² conductors
- The ferrules with plastic sleeve are made from soft tin-plated electrolytic copper
- In terms of dimensions, they correspond to DIN 46228-4: 1990-09

Key Commercial Data

Packing unit	100 STK
Minimum order quantity	100 STK
GTIN	4 017918 094614
Sales Key	05

Technical data

Dimensions

Length (b)	22 mm
Maximum stripping length	15 mm
Sleeve length	12 mm
Inner dimension of the insulating collar (d)	7.5 mm
Ferrule diameter	4.6 mm
Insulating collar thickness	0.3 mm
Sleeve wall thickness	0.2 mm

Ambient conditions

Short-term temperature	120 °C
Max. permanent temperature	105 °C

General

Color	ivory
Components	free from silicone and halogen
Flammability rating according to UL 94	HB
Material	E-CU

Ferrule - AI 10 -12 IV - 3201068

Technical data

General

Coating	tin-plated (galvanic)

Standards and Regulations

Connection in acc. with standard	CSA
Flammability rating according to UL 94	HB

Classifications

eCl@ss

eCl@ss 4.0	27060701
eCl@ss 4.1	27060701
eCl@ss 5.0	27400201
eCl@ss 5.1	27400201
eCl@ss 6.0	27400201
eCl@ss 7.0	27400201
eCl@ss 8.0	27400201

ETIM

ETIM 2.0	EC000005
ETIM 3.0	EC000005
ETIM 4.0	EC000005
ETIM 5.0	EC000005

UNSPSC

UNSPSC 6.01	30212109
UNSPSC 7.0901	27121703
UNSPSC 11	27121703
UNSPSC 12.01	27121703
UNSPSC 13.2	27121703

Approvals

Approvals

Approvals

CSA / CSAus / EAC / EAC / cCSAus

Ex Approvals

Approvals submitted

Ferrule - AI 10 -12 IV - 3201068

Approvals

Approval details

CSA

CSAus

EAC

EAC

cCSAus

Drawings

Dimensional drawing

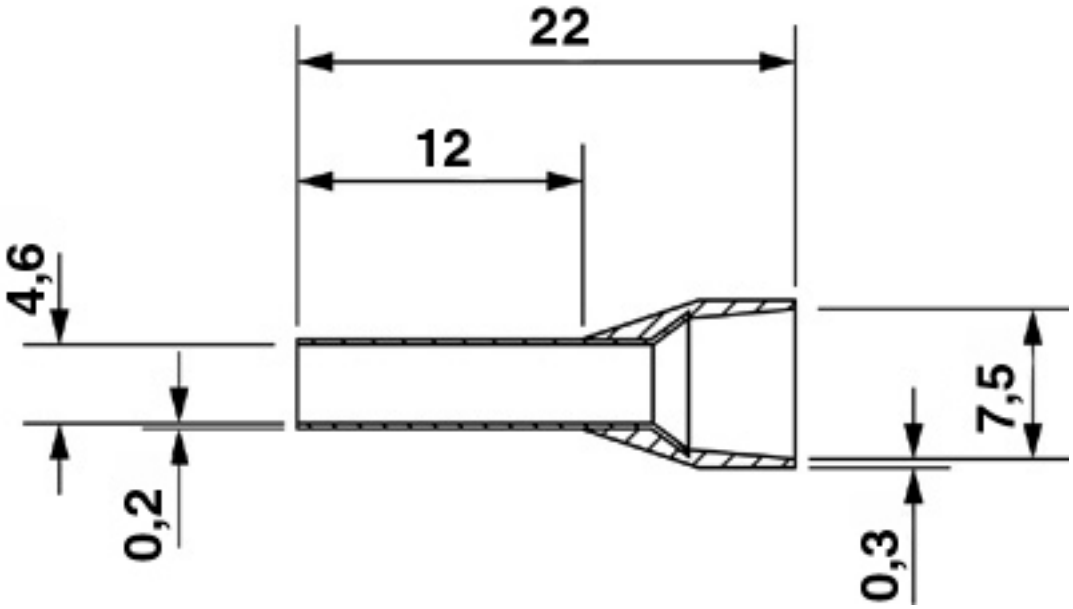

Phoenix Contact 2016 © - all rights reserved
http://www.phoenixcontact.com

PHOENIX CONTACT GmbH & Co. KG
Flachsmarktstr. 8
32825 Blomberg
Germany
Tel. +49 5235 300
Fax +49 5235 3 41200
http://www.phoenixcontact.com

Below is a list of articles with direct links to our shop Electric Automation Network where you can see:

- Quote per purchase volume in real time.
- Online documentation and datasheets of all products.
- Estimated delivery time enquiry in real time.
- Logistics systems for the shipment of materials almost anywhere in the world.
- Purchasing management, order record and tracking of shipments.

To access the product, click on the green button.

Product	Code	Reference	Product link
Ferrule, Sleeve length: 12 mm, Length: 22 mm, Color: ivory	3201068	AI 10 -12 IV	Buy on EAN