At the end of this document you will find links to products related to this catalog. You can go directly to our shop by clicking HERE. HERE

Plug - UP 4/ 1-R BU - 3060092

Please be informed that the data shown in this PDF Document is generated from our Online Catalog. Please find the complete data in the user's documentation. Our General Terms of Use for Downloads are valid
(http://phoenixcontact.com/download)

Illustration shows various versions of the product (left, center and right element) in different color combinations

Plug, Connection method: Screw connection, Number of positions: 1, Cross section: 0.2 mm² - 6 mm², AWG: 24 - 10, Width: 6.2 mm, Height: 41.2 mm, Color: blue

Product Description

Connector element right, left housing with engagement pin, right closed with cover

Why buy this product

- The COMBI plugs for self-assembly provide solutions that users can implement themselves
- The screw plugs can be combined with COMBI terminal blocks with all forms of connection technology and are available in two versions
- The plugs are assembled directly on site by snapping together single-position plug elements
- The plug design enables space-saving potential distribution by using four-conductor terminal blocks with two slots

Key Commercial Data

Packing unit	50 STK
GTIN	4 046356 090216

Technical data

General

Number of levels	1
Number of connections	1
Nominal cross section	4 mm²
Color	blue
Insulating material	PA
Flammability rating according to UL 94	V0
Maximum load current	32 A (with 6 mm² conductor cross section)
Rated surge voltage	8 kV
Degree of pollution	3
Overvoltage category	III
Insulating material group	I
Connection in acc. with standard	IEC 61984

Plug - UP 4/ 1-R BU - 3060092

Technical data

General

Maximum load current	32 A (with 6 mm² conductor cross section)
Nominal current I_N	32 A
Nominal voltage U_N	800 V
Number of positions	1

Dimensions

Width	6.2 mm
Length	21 mm
Height	41.2 mm
	24.80 mm

Connection data

Connection method	Screw connection
Connection in acc. with standard	IEC 61984
Conductor cross section solid min.	0.2 mm²
Conductor cross section solid max.	6 mm²
Conductor cross section AWG min.	24
Conductor cross section AWG max.	10
Conductor cross section flexible min.	0.2 mm²
Conductor cross section flexible max.	6 mm²
Min. AWG conductor cross section, flexible	24
Max. AWG conductor cross section, flexible	10
Conductor cross section flexible, with ferrule without plastic sleeve min.	0.25 mm²
Conductor cross section flexible, with ferrule without plastic sleeve max.	4 mm²
Conductor cross section flexible, with ferrule with plastic sleeve min.	0.25 mm²
Conductor cross section flexible, with ferrule with plastic sleeve max.	4 mm²
2 conductors with same cross section, solid min.	0.2 mm²
2 conductors with same cross section, solid max.	1.5 mm²
2 conductors with same cross section, stranded min.	0.2 mm²
2 conductors with same cross section, stranded max.	1.5 mm²
2 conductors with same cross section, stranded, TWIN ferrules with plastic sleeve, min.	0.5 mm²
2 conductors with same cross section, stranded, TWIN ferrules with plastic sleeve, max.	1.5 mm²
2 conductors with same cross section, stranded, ferrules without plastic sleeve, min.	0.25 mm²
2 conductors with same cross section, stranded, ferrules without plastic sleeve, max.	1.5 mm²
Stripping length	9 mm
Internal cylindrical gage	A4
Screw thread	M3
Tightening torque, min	0.6 Nm
Tightening torque max	0.8 Nm

Plug - UP 4/ 1-R BU - 3060092

Technical data

Standards and Regulations

Connection in acc. with standard	CUL
	IEC 61984
Flammability rating according to UL 94	V0

Classifications

eCl@ss

eCl@ss 4.0	272607xx
eCl@ss 4.1	27260701
eCl@ss 5.0	27260701
eCl@ss 5.1	27260701
eCl@ss 6.0	27141120
eCl@ss 7.0	27141120
eCl@ss 8.0	27141151

ETIM

ETIM 2.0	EC000897
ETIM 3.0	EC000897
ETIM 4.0	EC002021
ETIM 5.0	EC002021

UNSPSC

UNSPSC 6.01	30211802
UNSPSC 7.0901	39121402
UNSPSC 11	39121402
UNSPSC 12.01	39121402
UNSPSC 13.2	39121402

Approvals

Approvals

Approvals

UL Recognized / cUL Recognized / EAC / CSA / KEMA-KEUR / IECEE CB Scheme / cULus Recognized

Ex Approvals

Approvals submitted

Plug - UP 4/ 1-R BU - 3060092

Approvals

Approval details

UL Recognized

	B	C
mm²/AWG/kcmil	26-10	26-10
Nominal current IN	30 A	30 A
Nominal voltage UN	600 V	600 V

cUL Recognized

	B	C
mm²/AWG/kcmil	26-10	26-10
Nominal current IN	30 A	30 A
Nominal voltage UN	600 V	600 V

EAC

CSA

	B	C
mm²/AWG/kcmil	26-10	26-10
Nominal current IN	30 A	30 A
Nominal voltage UN	600 V	600 V

KEMA-KEUR

Nominal current IN	32 A
Nominal voltage UN	800 V

IECEE CB Scheme

Nominal current IN	32 A
Nominal voltage UN	800 V

Plug - UP 4/ 1-R BU - 3060092

Approvals

cULus Recognized

Drawings

Circuit diagram

Diagram

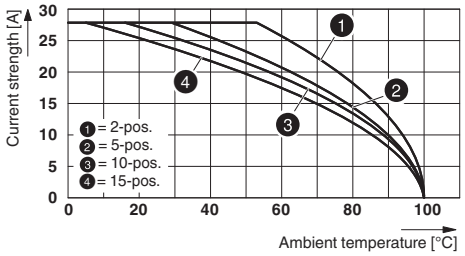

Schematic diagram

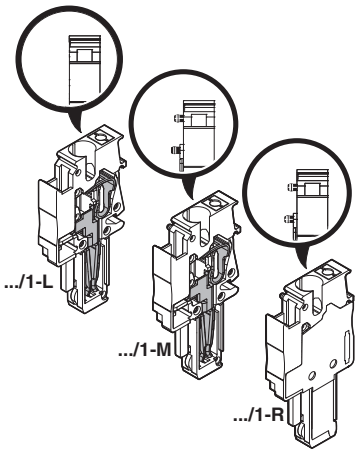

Phoenix Contact 2016 © - all rights reserved
http://www.phoenixcontact.com

PHOENIX CONTACT GmbH & Co. KG
Flachsmarktstr. 8
32825 Blomberg
Germany
Tel. +49 5235 300
Fax +49 5235 3 41200
http://www.phoenixcontact.com

Below is a list of articles with direct links to our shop Electric Automation Network where you can see:

- Quote per purchase volume in real time.
- Online documentation and datasheets of all products.
- Estimated delivery time enquiry in real time.
- Logistics systems for the shipment of materials almost anywhere in the world.
- Purchasing management, order record and tracking of shipments.

To access the product, click on the green button.

Product	Code	Reference	Product link
Plug, Connection method: Screw connection, Number of positions: 1, Cross section: 0.2 mm² - 6 mm², AWG: 24 - 10, Width: 6.2 mm, Height: 41.2 mm, Color: blue	3060092	UP 4/ 1-R BU	Buy on EAN