At the end of this document you will find links to products related to this catalog. You can go directly to our shop by clicking HERE. HERE

Temperature measuring transducer - MCR-T-UI-NC - 2814100

Please be informed that the data shown in this PDF Document is generated from our Online Catalog. Please find the complete data in the user's documentation. Our General Terms of Use for Downloads are valid
(http://phoenixcontact.com/download)

The illustration shows version MCR-T-UI

MCR-T module, programmable temperature measuring transducer, unconfigured, for thermocouple sensors and resistance thermometers, with 2, 3, or 4-wire system

Why buy this product

- Freely programmable via MCR/PI-CONF-WIN
- With transistor switching output
- Inverse output signal ranges as an option
- For resistance thermometers and thermocouples
- Measure differential temperatures

Key Commercial Data

Packing unit	1 STK
GTIN	4 017918 139421

Technical data

Note

Utilization restriction	EMC: class A product, see manufacturer's declaration in the download area

Dimensions

Width	17.5 mm
Height	99 mm
Depth	114.5 mm

Ambient conditions

Ambient temperature (operation)	-20 °C ... 65 °C

Input data

Configurable/programmable	Yes, unconfigured

Temperature measuring transducer - MCR-T-UI-NC - 2814100

Technical data

Input data

Sensor types (RTD) that can be used	Pt, Ni, Cu sensors
Sensor types that can be used (TC)	U, T, L, J, E, K, N, S, R, B, C, W, HK
Linear resistance measuring range	0 Ω ... 8000 Ω (freely adjustable, min. measuring range 100 Ω)
Sensor input current	250 µA (resistance thermometer)
Temperature measuring range	Depending on sensor type used
Connection method	2, 3, 4-wire
Protective circuit	Transient protection
	Surge protection 30 V DC
Connection method	Pluggable screw connection

Output data

Output name	Voltage output / current output
Configurable/programmable	Yes, unconfigured
Voltage output signal	0 V ... 10 V
	0 V ... 5 V
	-5 V ... 5 V
	-10 V ... 10 V
	10 V ... 0 V
	5 V ... 0 V
	10 V ... -10 V
	5 V ... -5 V
	1 V ... 5 V
Current output signal	0 mA ... 0.02 A
	4 mA ... 0.02 A
	20 mA ... 0 A
	20 mA ... 0.004 A
Max. output voltage	± 12 V
Max. output current	24 mA
Output voltage range with wire break	-12 V ... 12 V
Output current range with wire break	0 A ... 0.024 A
Output voltage range with overrange/underrange	-12 V ... 12 V
Output current range with overrange/underrange	0 A ... 0.024 A
Load/output load voltage output	≥ 10 kΩ
Load/output load current output	≤ 500 Ω
Protective circuit	Transient protection
D/A resolution	± 12 bit

Switching output

Output name	Transistor output, pnp
Output description	Can carry a load of 100 mA, switches supply voltage (not protected against short-circuit); locked in case of order-specific configuration, otherwise freely programmable through MCR/PI-CONF-WIN

Temperature measuring transducer - MCR-T-UI-NC - 2814100

Technical data

Switching output

Output voltage range	18 V DC ... 30 V DC (switches supply voltage, not short-circuit resistant)
Continuous load current	100 mA

Power supply

Supply voltage range	18 V DC ... 30 V DC
Max. current consumption	≤ 60 mA
Typical current consumption	40 mA

Connection data

Connection method	Pluggable screw connection
Conductor cross section solid min.	0.2 mm²
Conductor cross section solid max.	2.5 mm²
Conductor cross section AWG min.	24
Conductor cross section AWG max.	14
Conductor cross section flexible min.	0.2 mm²
Conductor cross section flexible max.	2.5 mm²
Stripping length	8 mm
Screw thread	M3

General

Maximum transmission error	≤ 0.1 % (of maximum range, ±6 mV or ±12 µA at output)
Maximum temperature coefficient	≤ 0.01 %/K
Temperature coefficient, typical	0.005 %/K
Cold point error, max.	≤ 3 K
Typical cold point errors	1.5 K
Test voltage input/output	1 kV (50 Hz, 1 min.)
Test voltage input/power supply	1 kV (50 Hz, 1 min.)
Color	green
Housing material	Polyamide PA non-reinforced
Mounting position	any
Conformance	CE-compliant
UL, USA / Canada	Class I, Div. 2, Groups A, B, C, D or Non-Hazardous Locations
GL	Germanischer Lloyd

Standards and Regulations

Connection in acc. with standard	CUL
Conformance	CE-compliant
UL, USA / Canada	Class I, Div. 2, Groups A, B, C, D or Non-Hazardous Locations
GL	Germanischer Lloyd

Temperature measuring transducer - MCR-T-UI-NC - 2814100

Classifications

eCl@ss

eCl@ss 4.0	27200206
eCl@ss 4.1	27200206
eCl@ss 5.0	27200206
eCl@ss 5.1	27200206
eCl@ss 6.0	27200206
eCl@ss 7.0	27200206
eCl@ss 8.0	27371503

ETIM

ETIM 2.0	EC001446
ETIM 3.0	EC001446
ETIM 4.0	EC001446
ETIM 5.0	EC002568

UNSPSC

UNSPSC 6.01	30211506
UNSPSC 7.0901	39121008
UNSPSC 11	39121008
UNSPSC 12.01	39121008
UNSPSC 13.2	39121008

Approvals

Approvals

Approvals

UL Recognized / cUL Recognized / GL / EAC / cULus Recognized

Ex Approvals

Approvals submitted

Approval details

UL Recognized

Temperature measuring transducer - MCR-T-UI-NC - 2814100

Approvals

cUL Recognized

GL

EAC

cULus Recognized

Drawings

Dimensional drawing

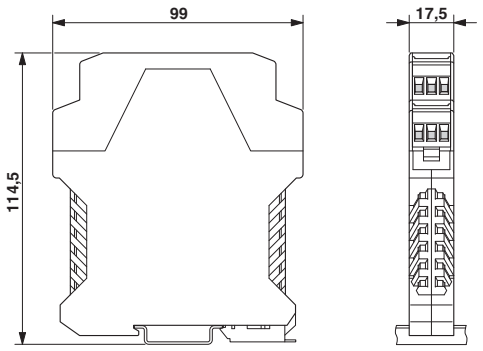

Temperature measuring transducer - MCR-T-UI-NC - 2814100

Circuit diagram

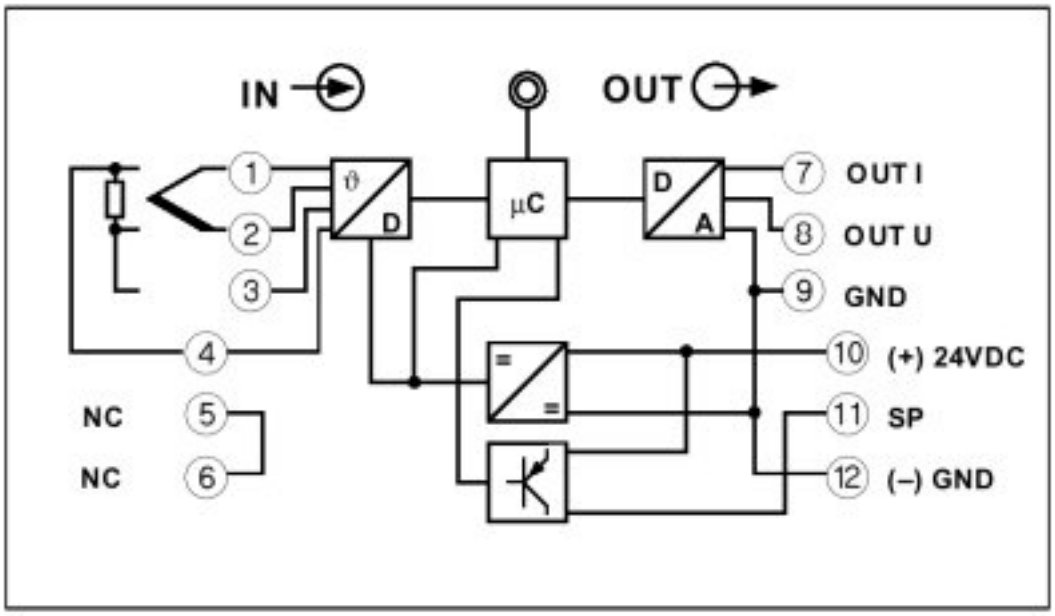

Phoenix Contact 2016 © - all rights reserved
http://www.phoenixcontact.com

PHOENIX CONTACT GmbH & Co. KG
Flachsmarktstr. 8
32825 Blomberg
Germany
Tel. +49 5235 300
Fax +49 5235 3 41200
http://www.phoenixcontact.com

Below is a list of articles with direct links to our shop Electric Automation Network where you can see:

- Quote per purchase volume in real time.
- Online documentation and datasheets of all products.
- Estimated delivery time enquiry in real time.
- Logistics systems for the shipment of materials almost anywhere in the world.
- Purchasing management, order record and tracking of shipments.

To access the product, click on the green button.

Product	Code	Reference	Product link
MCR-T module, programmable temperature measuring transducer, unconfigured, for thermocouple sensors and resistance thermometers, with 2, 3, or 4-wire system	2814100	MCR-T-UI-NC	Buy on EAN