At the end of this document you will find links to products related to this catalog. You can go directly to our shop by clicking HERE. HERE

Printed-circuit board connector - DMC 1,5/ 3-G1-3,5 P20THR - 1786840

Please be informed that the data shown in this PDF Document is generated from our Online Catalog. Please find the complete data in the user's documentation. Our General Terms of Use for Downloads are valid
(http://phoenixcontact.com/download)

Header, Nominal current: 8 A, Rated voltage (III/2): 160 V, Number of positions: 3, Pitch: 3.5 mm, Color: black, Contact surface: Tin, Mounting: THR soldering

The figure shows a 10-pos. version with 20 contacts

Why buy this product

- Taped headers available on request
- Headers with flange can be combined with plugs with screw flange or with Lock & Release levers
- At 8 mm, the distance from the edge of the PCB to the first row of holes is compatible with MC headers
- Extremely small THR double-level headers for SMT and wave soldering processes

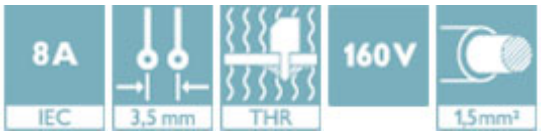

Key Commercial Data

Packing unit	50 STK
GTIN	4 046356 594967

Technical data

Dimensions

Length	11.6 mm
Pitch	3.50 mm
Dimension a	7 mm
Constructional height	10.8 mm
Height	12.8 mm
Length of the solder pin	2 mm
Pin dimensions	0,8 x 0,8 mm
Pin spacing	2.50 mm
Hole diameter	1.4 mm

General

Range of articles	DMC 1,5/..-G1-THR

Printed-circuit board connector - DMC 1,5/ 3-G1-3,5 P20THR - 1786840

Technical data

General

Insulating material group	IIIa
Rated surge voltage (III/3)	2.5 kV
Rated surge voltage (III/2)	2.5 kV
Rated surge voltage (II/2)	2.5 kV
Rated voltage (III/3)	160 V
Rated voltage (III/2)	160 V
Rated voltage (II/2)	250 V
Connection in acc. with standard	EN-VDE
Nominal current I_N	8 A
Maximum load current	8 A
Insulating material	LCP
Flammability rating according to UL 94	V0
Color	black
Number of positions	3

Standards and Regulations

Connection in acc. with standard	EN-VDE
	CUL
Flammability rating according to UL 94	V0

Classifications

eCl@ss

eCl@ss 4.0	272607xx
eCl@ss 4.1	27260701
eCl@ss 5.0	27260701
eCl@ss 5.1	27260701
eCl@ss 6.0	27260704
eCl@ss 7.0	27440402
eCl@ss 8.0	27440402
eCl@ss 9.0	27440402

ETIM

ETIM 4.0	EC002637
ETIM 5.0	EC002637

UNSPSC

UNSPSC 6.01	30211810
UNSPSC 7.0901	39121409
UNSPSC 11	39121409
UNSPSC 12.01	39121409
UNSPSC 13.2	39121409

Printed-circuit board connector - DMC 1,5/ 3-G1-3,5 P20THR - 1786840

Approvals

Approvals

Approvals

VDE Gutachten mit Fertigungsüberwachung / IECEE CB Scheme / cULus Recognized

Ex Approvals

Approvals submitted

Approval details

VDE Gutachten mit Fertigungsüberwachung

Nominal current IN	8 A
Nominal voltage UN	160 V

IECEE CB Scheme

Nominal current IN	8 A
Nominal voltage UN	160 V

cULus Recognized

	B	C
Nominal current IN	8 A	8 A
Nominal voltage UN	150 V	50 V

Drawings

Printed-circuit board connector - DMC 1,5/ 3-G1-3,5 P20THR - 1786840

Schematic diagram

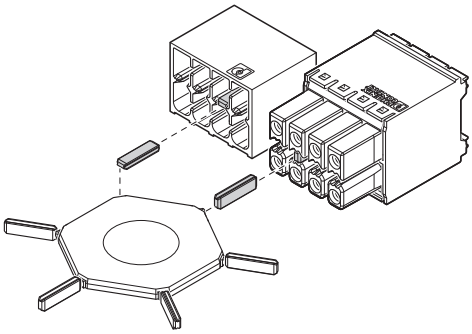

Drilling diagram

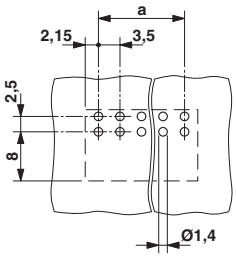

Use of the CP-DMC... coding profile

Diagram

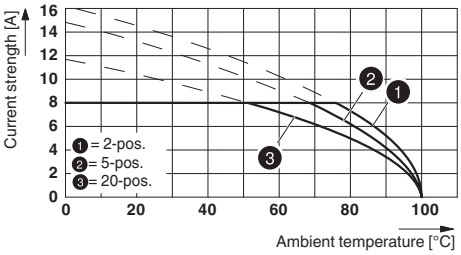

Dimensional drawing

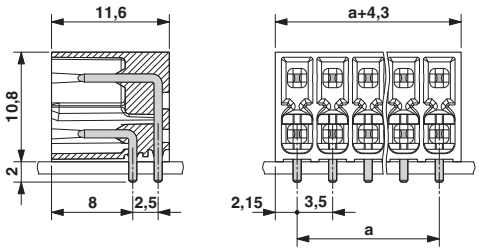

Phoenix Contact 2016 © - all rights reserved
http://www.phoenixcontact.com

PHOENIX CONTACT GmbH & Co. KG
Flachsmarktstr. 8
32825 Blomberg
Germany
Tel. +49 5235 300
Fax +49 5235 3 41200
http://www.phoenixcontact.com

Below is a list of articles with direct links to our shop Electric Automation Network where you can see:

- Quote per purchase volume in real time.
- Online documentation and datasheets of all products.
- Estimated delivery time enquiry in real time.
- Logistics systems for the shipment of materials almost anywhere in the world.
- Purchasing management, order record and tracking of shipments.

To access the product, click on the green button.

Product	Code	Reference	Product link
Header, Nominal current: 8 A, Rated voltage (III/2): 160 V, Number of positions: 3, Pitch: 3.5 mm, Color: black, Contact surface: Tin, Mounting: SMD/THT/THR	1786840	DMC 1,5/ 3-G1-3,5 P20THR	Buy on EAN