At the end of this document you will find links to products related to this catalog. You can go directly to our shop by clicking HERE. HERE

Sensor/actuator box - SACB-8Q/4P- 5,0PUR - 1683701

Please be informed that the data shown in this PDF Document is generated from our Online Catalog. Please find the complete data in the user's documentation. Our General Terms of Use for Downloads are valid (http://phoenixcontact.com/download)

Sensor/actuator box, Application: Standard, Connection method: QUICKON, 0.34 mm² ... 0.75 mm², Number of slots: 8, Number of positions: 4, Slot assignment: single, Status indication: No, Universal; Master cable connection: Fixed connection 180°, PUR/PVC, Cable length: 5 m, Shielding: No

Why buy this product

- Safety in the field, thanks to molded housing and high degree of protection
- Flexible, distributed bundling of signals in one master cable
- Innovative and time-saving assembly with insulation displacement connection

Key Commercial Data

Packing unit	1 STK
GTIN	4 017918 171063
Sales Key	02

Technical data

General

Rated voltage	120 V
Max. operating voltage U_{max}	135 V
Current carrying capacity per I/O signal	4 A
Current carrying capacity per slot	4 A
Total rated current	12 A
Number of positions	4
Number of slots	8
Flammability rating according to UL 94	V0
Sensor/actuator connection system	QUICKON

Ambient conditions

Degree of protection	IP65
	IP67
Ambient temperature (operation)	-25 °C ... 60 °C
	-40 °C ... 90 °C (for fixed installation)
	-5 °C ... 80 °C (for flexible installation)

Master cable connection data

Sensor/actuator box - SACB-8Q/4P- 5,0PUR - 1683701

Technical data

Master cable connection data

Connection method	Fixed connection
Length of cable	5 m

Conductor data

Structure of individual litz in acc. with VDE 0295 / smallest wire diameter	Class 2-6 // 0.34 mm²: 0.1 mm; 0.5 - 0.75 mm²: 0.15 mm
Wire insulation material	PVC/PE
Wire diameter including insulation	≤ 2.5 mm
Minimum external conductor diameter	4 mm
Maximum external conductor diameter	7.5 mm
Tightening torque, union nut	2.5 Nm
Wrench size, union nut	22 mm
Note on the frequency of connections	if the conductor is connected more than once, seal and cap may need to be replaced.
Conductor cross section flexible min.	0.34 mm²
Conductor cross section flexible max.	0.75 mm²
Conductor cross section AWG min.	22
Conductor cross section AWG max.	18

Insulation material

Housing material	PA
Material of the moulding mass	PUR
Contact material	Steel/copper
Contact surface material	Sn

Pin assignment

Slot/position = Wire color or connection	1 / 4 (A) = WH
	2 / 4 (A) = GN
	3 / 4 (A) = YE
	4 / 4 (A) = GY
	5 / 4 (A) = PK
	6 / 4 (A) = RD
	7 / 4 (A) = BK
	8 / 4 (A) = VT
	1-8 / 1 (+ 120 V) = BN
	1-8 / 3 (0 V) = BU
	1-8 / 5 (PE) = GN/YE

Standards and Regulations

Connection in acc. with standard	CUL
Flammability rating according to UL 94	V0

Cable

Cable type	PUR/PVC black
Cable type (abbreviation)	PUR

Sensor/actuator box - SACB-8Q/4P- 5,0PUR - 1683701

Technical data

Cable

Cable abbreviation	LiYY11Y-HF
UL AWM style	20549 (80°C/300 V)
Conductor cross section	8x 0.34 mm² (Signal line)
	3x 0.75 mm² (power line)
AWG signal line	22
AWG power supply	18
Conductor structure signal line	19x 0.15 mm
Conductor structure, voltage supply	42x 0.15 mm
Core diameter including insulation	1.3 mm ±0.1 mm (Signal line)
	1.8 mm ±0.1 mm (power line)
Overall twist	Wires twisted in layers
External sheath, color	black RAL 9005
Inner sheath thickness	≥ 0.15 mm
Outer sheath thickness	≥ 0.38 mm
External cable diameter D	8.5 mm ±0.2 mm
Minimum bending radius, fixed installation	7.5 x D
Minimum bending radius, flexible installation	10 x D
Number of bending cycles	1500000
Minimum bending radius, drag chain applications	10 x D
Traversing path	2 m
Traversing rate	2 m/s
Cable weight	107.4 kg/km
Outer sheath, material	PUR
Material, inner sheath	PVC
Material conductor insulation	PVC
Conductor material	Bare Cu litz wires
Nominal voltage, cable	300 V
Test voltage, cable	2000 V
Special properties	Silicone-free
Flame resistance	DIN EN 50265
Resistance to oil	As per VDE 0472 Part 803
Other resistance	Highly resistant to acids, alkaline solutions and solvents
Ambient temperature (operation)	-40 °C ... 90 °C (cable, fixed installation)
	-5 °C ... 80 °C (cable, flexible installation)

Classifications

eCl@ss

eCl@ss 4.0	27140815
eCl@ss 4.1	27140815

Sensor/actuator box - SACB-8Q/4P- 5,0PUR - 1683701

Classifications

eCl@ss

eCl@ss 5.0	27143423
eCl@ss 5.1	27143423
eCl@ss 6.0	27143423
eCl@ss 7.0	27449001
eCl@ss 8.0	27279219

ETIM

ETIM 2.0	EC000200
ETIM 3.0	EC001856
ETIM 4.0	EC002585
ETIM 5.0	EC002585

UNSPSC

UNSPSC 6.01	31261501
UNSPSC 7.0901	31261501
UNSPSC 11	31261501
UNSPSC 12.01	31261501
UNSPSC 13.2	31261501

Approvals

Approvals

Approvals

UL Recognized / cUL Recognized / EAC / cULus Recognized

Ex Approvals

Approvals submitted

Approval details

UL Recognized

mm²/AWG/kcmil	22-16
Nominal voltage UN	120 V

Sensor/actuator box - SACB-8Q/4P- 5,0PUR - 1683701

Approvals

cUL Recognized

mm²/AWG/kcmil	22-16
Nominal voltage UN	120 V

EAC

cULus Recognized

Drawings

Schematic diagram

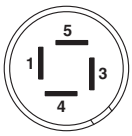

QUICKON connection, 4-pos.

Cable cross section

PUR/PVC black [PUR]

Circuit diagram

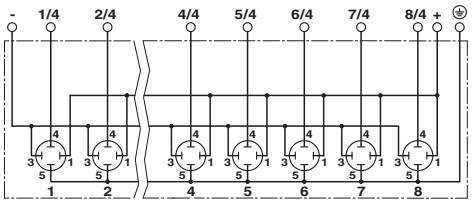

Sensor/actuator box - SACB-8Q/4P- 5,0PUR - 1683701

Dimensional drawing

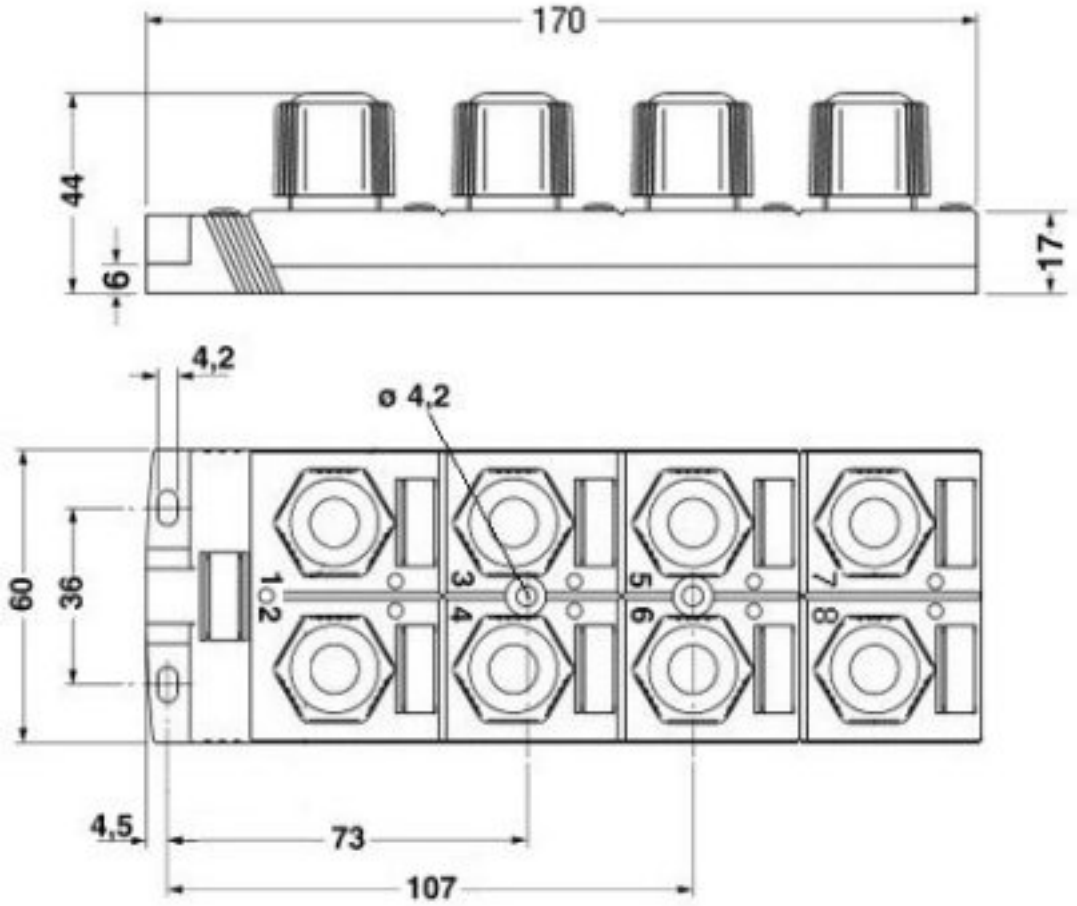

Phoenix Contact 2016 © - all rights reserved
http://www.phoenixcontact.com

PHOENIX CONTACT GmbH & Co. KG
Flachsmarktstr. 8
32825 Blomberg
Germany
Tel. +49 5235 300
Fax +49 5235 3 41200
http://www.phoenixcontact.com

Below is a list of articles with direct links to our shop Electric Automation Network where you can see:

- Quote per purchase volume in real time.
- Online documentation and datasheets of all products.
- Estimated delivery time enquiry in real time.
- Logistics systems for the shipment of materials almost anywhere in the world.
- Purchasing management, order record and tracking of shipments.

To access the product, click on the green button.

Product	Code	Reference	Product link
Sensor/actuator box, Application: Standard, Connection method: QUICKON, 0.34 mm² ... 0.75 mm², Number of slots: 8, Number of positions: 4, Slot assignment: single, Status indication: No, Universal; Master cable connection: Fixed connection 180°, PUR/PVC, Cable length: 5 m, Shielding: No	1683701	SACB-8Q/4P-5,0PUR	Buy on EAN