At the end of this document you will find links to products related to this catalog. You can go directly to our shop by clicking HERE. HERE

Connector - SACC-MINMS-5CON-PG13/2,5 - 1456213

Please be informed that the data shown in this PDF Document is generated from our Online Catalog. Please find the complete data in the user's documentation. Our General Terms of Use for Downloads are valid
(http://phoenixcontact.com/download)

Connector, 5-position, Plug straight 7/8"-16UNF, Screw connection, Knurl material: Zinc die-cast, nickel-plated, Cable gland Pg13,5, External cable diameter 10 mm ... 12 mm, Contact 3 capacitive

Why buy this product

- Safe use in the field, thanks to a high degree of protection
- Flexible: connectors for on-site assembly
- Screw connection: proven connection technology for a large selection of different conductors

Key Commercial Data

Packing unit	1 STK
GTIN	4 046356 616843

Technical data

Dimensions

External cable diameter	10 mm ... 12 mm
Stripping length of the sheath	30 mm
Stripping length of the individual wire	7 mm

Ambient conditions

Ambient temperature (operation)	-25 °C ... 85 °C (Plug / socket)
Degree of protection	IP67

General

Rated current at 40°C	9 A
Rated voltage	300 V
Number of positions	5
Insulation resistance	≥ 100 MΩ
Coding	A - standard
Status display	No
Overvoltage category	II
Degree of pollution	3
Connection method	Screw connection
Conductor cross section	0.34 mm² ... 2.5 mm²

Connector - SACC-MINMS-5CON-PG13/2,5 - 1456213

Technical data

General

Conductor cross section AWG	22 ... 14
Insertion/withdrawal cycles	≥ 100
Torque	0.8 Nm (7/8" connectors)
	0.4 Nm (Screw terminal blocks)
	1 Nm ... 1.4 Nm (Pressure screw)
Tightening torque	Screw plug insert with sleeve housing as far it will go
Assembly instructions	The wires can be connected both with ferrules and without ferrules

Material

Flammability rating according to UL 94	HB
Contact material	CuZn
Contact surface material	Au
Contact carrier material	PUR / PA66
Material of grip body	PBT
Material, knurls	Zinc die-cast, nickel-plated

Standards and Regulations

Connection in acc. with standard	CUL
Flammability rating according to UL 94	HB

Classifications

eCl@ss

eCl@ss 4.0	27250313
eCl@ss 4.1	27250313
eCl@ss 5.0	27143423
eCl@ss 5.1	27143423
eCl@ss 6.0	27143423
eCl@ss 7.0	27449001
eCl@ss 8.0	27440104
eCl@ss 9.0	27440102

ETIM

ETIM 4.0	EC002062
ETIM 5.0	EC002062

UNSPSC

UNSPSC 6.01	31251501
UNSPSC 7.0901	31251501
UNSPSC 11	31251501
UNSPSC 12.01	31251501
UNSPSC 13.2	31251501

Connector - SACC-MINMS-5CON-PG13/2,5 - 1456213

Approvals

Approvals

Approvals

UL Recognized / cUL Recognized / EAC / cULus Recognized

Ex Approvals

Approvals submitted

Approval details

UL Recognized

cUL Recognized

EAC

cULus Recognized

Drawings

Schematic diagram

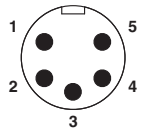

Pin assignment, plug, 7/8"-16UNF, 5-pos., view of male side

Functional drawing

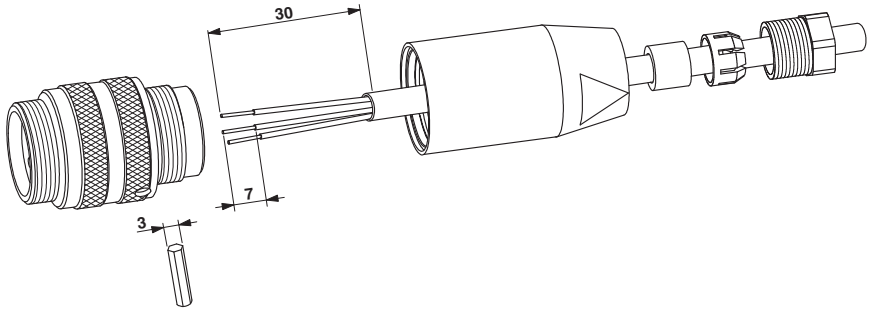

Connector - SACC-MINMS-5CON-PG13/2,5 - 1456213

Dimensional drawing

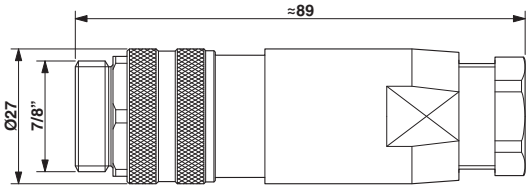

Phoenix Contact 2016 © - all rights reserved
http://www.phoenixcontact.com

PHOENIX CONTACT GmbH & Co. KG
Flachsmarktstr. 8
32825 Blomberg
Germany
Tel. +49 5235 300
Fax +49 5235 3 41200
http://www.phoenixcontact.com

Below is a list of articles with direct links to our shop Electric Automation Network where you can see:

- Quote per purchase volume in real time.
- Online documentation and datasheets of all products.
- Estimated delivery time enquiry in real time.
- Logistics systems for the shipment of materials almost anywhere in the world.
- Purchasing management, order record and tracking of shipments.

To access the product, click on the green button.

Product	Code	Reference	Product link
Connector, 5-position, Plug straight 7/8"-16UNF, Screw connection, Knurl material: Zinc die-cast, nickel-plated, Cable gland Pg13,5, External cable diameter 10 mm ... 12 mm, Contact 3 capacitive	1456213	SACC-MINMS-5CON-PG13/2,5	Buy on EAN