At the end of this document you will find links to products related to this catalog. You can go directly to our shop by clicking HERE. HERE

OMRON

Machine Automation Controller

NJ-series

CPU Unit Hardware

User's Manual

NJ501-1□□□
NJ301-1□□□
NJ-P□3001
CJ1W-ID□□□/IA□□□
CJ1W-INT01
CJ1W-IDP01
CJ1W-OC□□□/OD□□□/OA□□□
CJ1W-MD□□□
CJ1W-B7A□□

CPU Unit
Power Supply Unit
Basic I/O Units

SYSMAC
always in control

W500-E1-09

© **OMRON, 2011**

All rights reserved. No part of this publication may be reproduced, stored in a retrieval system, or transmitted, in any form, or by any means, mechanical, electronic, photocopying, recording, or otherwise, without the prior written permission of OMRON.

No patent liability is assumed with respect to the use of the information contained herein. Moreover, because OMRON is constantly striving to improve its high-quality products, the information contained in this manual is subject to change without notice. Every precaution has been taken in the preparation of this manual. Nevertheless, OMRON assumes no responsibility for errors or omissions. Neither is any liability assumed for damages resulting from the use of the information contained in this publication.

Trademarks

- Sysmac and SYSMAC are trademarks or registered trademarks of OMRON Corporation in Japan and other countries for OMRON factory automation products.
- Windows, Windows XP, Windows Vista, Windows 7, and Windows 8 are registered trademarks of Microsoft Corporation in the USA and other countries.
- EtherCAT® is registered trademark and patented technology, licensed by Beckhoff Automation GmbH, Germany.
- ODVA, CIP, CompoNet, DeviceNet, and EtherNet/IP are trademarks of ODVA.
- The SD and SDHC logos are trademarks of SD-3C, LLC.

Other company names and product names in this document are the trademarks or registered trademarks of their respective companies.

Introduction

Thank you for purchasing an NJ-series CPU Unit.
This manual contains information that is necessary to use the NJ-series CPU Unit. Please read this manual and make sure you understand the functionality and performance of the NJ-series CPU Unit before you attempt to use it in a control system.
Keep this manual in a safe place where it will be available for reference during operation.

Intended Audience

This manual is intended for the following personnel, who must also have knowledge of electrical systems (an electrical engineer or the equivalent).

- Personnel in charge of introducing FA systems.
- Personnel in charge of designing FA systems.
- Personnel in charge of installing and maintaining FA systems.
- Personnel in charge of managing FA systems and facilities.

For programming, this manual is intended for personnel who understand the programming language specifications in international standard IEC 61131-3 or Japanese standard JIS B 3503.

Applicable Products

This manual covers the following products.

- NJ-series CPU Units
  - NJ501-15□□
  - NJ501-14□□
  - NJ501-13□□
  - NJ301-12□□
  - NJ301-11□□

Part of the specifications and restrictions for the CPU Units are given in other manuals. Refer to *Relevant Manuals* on page 2 and *Related Manuals* on page 32.

Relevant Manuals

The following table provides the relevant manuals for the NJ-series CPU Units.
Read all of the manuals that are relevant to your system configuration and application before you use the NJ-series CPU Unit.

Most operations are performed from the Sysmac Studio Automation Software. Refer to the *Sysmac Studio Version 1 Operation Manual* (Cat. No. W504) for information on the Sysmac Studio.

Purpose of use	Manual								
	Basic information								
	NJ-series CPU Unit Hardware User's Manual	NJ-series CPU Unit Software User's Manual	NJ-series Instructions Reference Manual	NJ-series CPU Unit Motion Control User's Manual	NJ-series Motion Control Instructions Reference Manual	NJ-series CPU Unit Built-in EtherCAT Port User's Manual	NJ-series CPU Unit Built-in EtherNet/IP Port User's Manual	NJ-series Database Connection CPU Unit User's Manual	NJ-series Troubleshooting Manual
Introduction to NJ-series Controllers	●								
Setting devices and hardware									
Using motion control				●					
Using EtherCAT	●					●			
Using EtherNet/IP							●		
Using the database connection service								●	
Software settings									
Using motion control				●					
Using EtherCAT		●				●			
Using EtherNet/IP							●		
Using the database connection service								●	
Writing the user program									
Using motion control				●	●				
Using EtherCAT		●	●			●			
Using EtherNet/IP							●		
Using the database connection service								●	
Programming error processing									●
Testing operation and debugging									
Using motion control		●		●					
Using EtherCAT						●			
Using EtherNet/IP							●		
Using the database connection service								●	
Learning about error management and corrections*1	▲	▲		▲		▲	▲	▲	●
Maintenance									
Using motion control	●			●					
Using EtherCAT						●			
Using EtherNet/IP							●		

*1 Refer to the *NJ-series Troubleshooting Manual* (Cat. No. W503) for the error management concepts and an overview of the error items. Refer to the manuals that are indicated with triangles for details on errors for the corresponding Units.

Manual Structure

Page Structure

The following page structure is used in this manual.

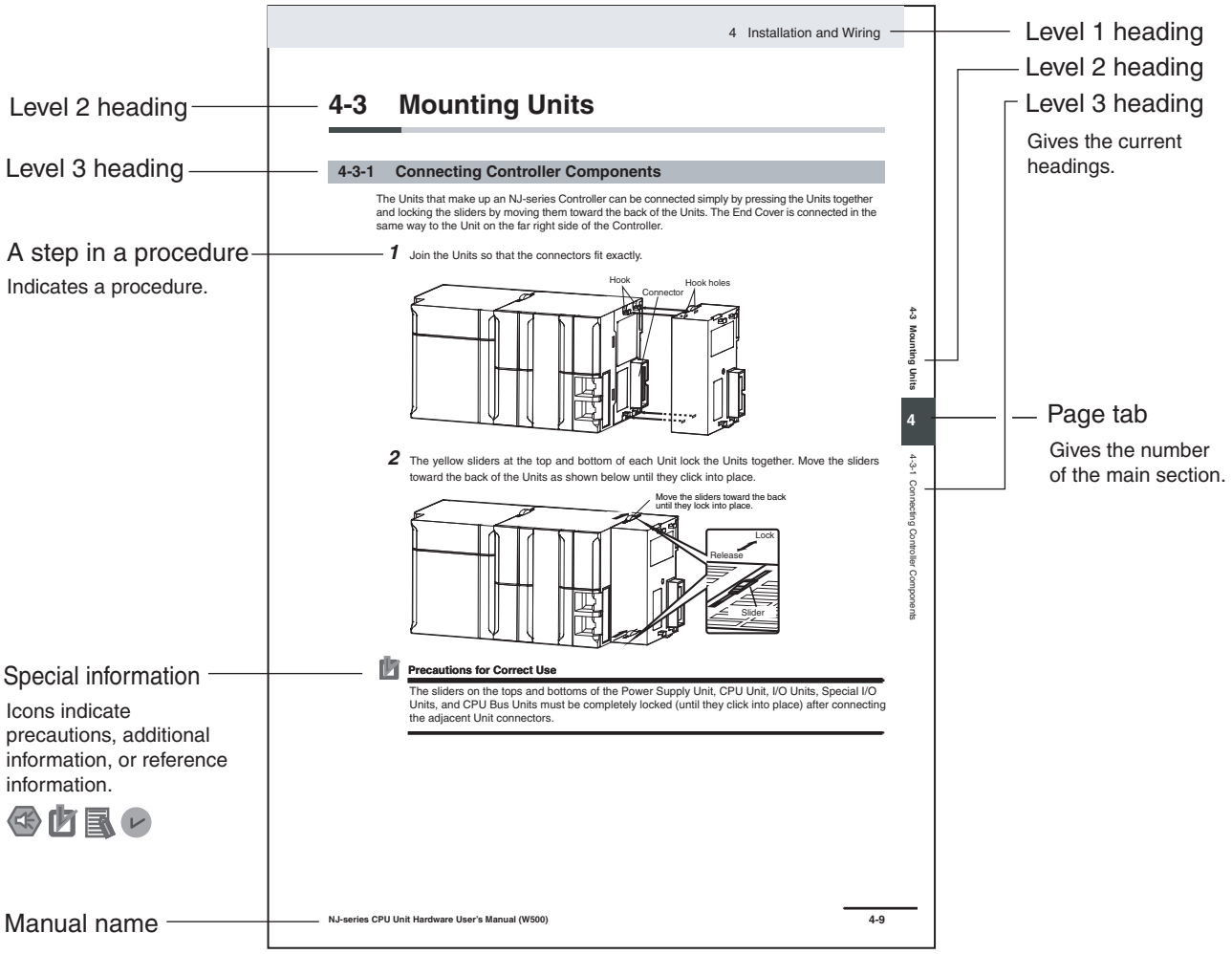

This illustration is provided only as a sample. It may not literally appear in this manual.

Special Information

Special information in this manual is classified as follows:

Precautions for Safe Use

Precautions on what to do and what not to do to ensure safe usage of the product.

Precautions for Correct Use

Precautions on what to do and what not to do to ensure proper operation and performance.

Additional Information

Additional information to read as required.
This information is provided to increase understanding or make operation easier.

Version Information

Information on differences in specifications and functionality for CPU Units with different unit versions and for different versions of the Sysmac Studio is given.

Note References are provided to more detailed or related information.

Precaution on Terminology

In this manual, “download” refers to transferring data from the Sysmac Studio to the physical Controller and “upload” refers to transferring data from the physical Controller to the Sysmac Studio.

For the Sysmac Studio, synchronization is used to both upload and download data. Here, “synchronize” means to automatically compare the data for the Sysmac Studio on the computer with the data in the physical Controller and transfer the data in the direction that is specified by the user.

Sections in this Manual

1 Introduction to NJ-series Controllers
2 System Configuration
3 Configuration Units
4 Installation and Wiring
5 Troubleshooting
6 Inspection and Maintenance
A Appendices
I Index

CONTENTS

Introduction 1
Relevant Manuals 2
Manual Structure 3
Sections in this Manual 5
Terms and Conditions Agreement 11
Safety Precautions 13
Precautions for Safe Use 18
Precautions for Correct Use 24
Regulations and Standards 27
Unit Versions 29
Related Manuals 32
Terminology 34
Revision History 38

Section 1 Introduction to NJ-series Controllers

1-1 The NJ-series Controllers 1-2
1-1-1 Features 1-2
1-1-2 Introduction to the System Configurations 1-4
1-2 Specifications 1-7
1-3 Overall Operating Procedure for the NJ-series Controller 1-10
1-3-1 Overall Procedure 1-10
1-3-2 Procedure Details 1-11

Section 2 System Configuration

2-1 Basic System Configuration 2-2
2-1-1 EtherCAT Network Configuration 2-4
2-1-2 CJ-series Unit Configuration 2-5
2-2 Connecting to the Sysmac Studio 2-18
2-3 Network Configuration 2-19

Section 3 Configuration Units

3-1 CPU Units 3-2
3-1-1 Models and Specifications 3-2
3-1-2 Components and Functions 3-2
3-2 SD Memory Cards 3-9

3-2-1 Models and Specifications 3-9
3-2-2 Purpose 3-9
3-2-3 Installing and Removing 3-9

3-3 Power Supply Units 3-12
3-3-1 Models and Specifications 3-12
3-3-2 Components and Functions 3-14
3-3-3 Selecting a Power Supply Unit 3-15

3-4 CJ-series Basic I/O Units 3-20
3-4-1 Models and Specifications 3-20
3-4-2 Part Names and Functions 3-21

3-5 B7A Interface Ports 3-24
3-5-1 Overview 3-24
3-5-2 System Configuration 3-24
3-5-3 Models 3-24
3-5-4 B7A Communications Specifications 3-25
3-5-5 Common Specifications 3-26
3-5-6 B7A Interface Port I/O Types 3-26
3-5-7 Parts and Names 3-27
3-5-8 Transmission Error Processing 3-29

3-6 CJ-series I/O Control Units and I/O Interface Units 3-30
3-6-1 Models and Specifications 3-30
3-6-2 Component and Functions 3-30

3-7 Sysmac Studio 3-31
3-7-1 Model Numbers 3-31
3-7-2 Connection 3-32

Section 4 Installation and Wiring

4-1 Processing at Power ON and Power OFF 4-2
4-1-1 Power ON Operation 4-2
4-1-2 Power OFF Operation 4-3
4-1-3 Resetting the Controller from the Sysmac Studio 4-5

4-2 Fail-safe Circuits 4-6
4-2-1 Order of Powering Up the Controller and Controlled System 4-7

4-3 Mounting Units 4-9
4-3-1 Installation in a Control Panel 4-9
4-3-2 Connecting Controller Components 4-14
4-3-3 DIN Track Installation 4-16
4-3-4 Connecting CJ-series Expansion Racks 4-19
4-3-5 Assembled Appearance and Dimensions 4-21

4-4 Wiring 4-26
4-4-1 Power Supply Wiring 4-26
4-4-2 Wiring the Built-in EtherCAT Port 4-31
4-4-3 Wiring CJ-series Basic I/O Units with Terminal Blocks 4-31
4-4-4 Wiring CJ-series Basic I/O Units with Connectors 4-33
4-4-5 Connecting to Connector-Terminal Block Conversion Units or I/O Relay Terminals 4-38
4-4-6 Connecting I/O Devices 4-39
4-4-7 Wiring the Built-in EtherCAT Port 4-42
4-4-8 Wiring B7A Interface Units 4-43

4-5 Control Panel Installation 4-49
4-5-1 Temperature 4-49
4-5-2 Humidity 4-51
4-5-3 Vibration and Shock 4-51
4-5-4 Atmosphere 4-51
4-5-5 Electrical Environment 4-52
4-5-6 Grounding 4-56

Section 5 Troubleshooting

5-1 Operation after an Error 5-2
5-1-1 Overview of NJ-series Status 5-2
5-1-2 Fatal Errors in the CPU Unit 5-3
5-1-3 Non-fatal error in CPU Unit 5-4

5-2 Troubleshooting 5-11
5-2-1 Checking to See If the CPU Unit Is Operating 5-11
5-2-2 Troubleshooting Flowchart for Non-fatal Errors 5-12
5-2-3 Error Table 5-13
5-2-4 Error Descriptions 5-23
5-2-5 Troubleshooting Errors That Are Not in the CPU Unit 5-66

Section 6 Inspection and Maintenance

6-1 Periodic Maintenance and Inspection 6-2
6-1-1 Periodic Inspection 6-2
6-1-2 Unit Replacement Precautions 6-3

6-2 Replacing the Battery 6-4
6-2-1 Battery Replacement 6-4
6-2-2 Operation without a Battery 6-7

Appendices

A-1 Specifications A-3

A-2 Specifications of Basic I/O Units A-4
A-2-1 Overview of Units A-4
A-2-2 Basic I/O Units A-6
A-2-3 Precautions on Contact Output Units A-53
A-2-4 Connecting Connector-Terminal Block Conversion Units and I/O Relay Terminals A-55

A-3 Dimensions A-90
A-3-1 NJ-series CPU Units A-90
A-3-2 NJ-series Power Supply Units A-91
A-3-3 CJ-series Basic I/O Units A-92
A-3-4 B7A Interface Unit A-95
A-3-5 CJ-series I/O Control Unit and I/O Interface Unit A-95
A-3-6 SD Memory Card A-95

A-4 Load Short-circuit Protection and Line Disconnection Detection for CJ-series Basic I/O Units A-96
A-4-1 Load Short-circuit Protection and Line Disconnection Detection for CJ1W-OD202 ..... A-96
A-4-2 Load Short-circuit Protection for CJ1W-OD204/OD212/OD232/MD232 ..... A-99

A-5 EMC Directive Measures for Relay Outputs A-101

A-6 System-defined Variables Related to Hardware A-103
A-6-1 System-defined Variables for the Overall NJ-series Controller (No Category) A-103
A-6-2 PLC Function Module, Category Name: _PLC A-109
A-6-3 PLC Function Module, Category Name: _CJB A-109
A-6-4 Meanings of Error Status Bits A-111

A-7 Specifications for Individual System-defined Variables A-112
A-7-1 System-defined Variables for the Overall NJ-series Controller (No Category) A-112
A-7-2 PLC Function Module, Category Name: _PLC A-119
A-7-3 PLC Function Module, Category Name: _CJB A-120

A-8 Version Information A-124
A-8-1 Relationship between Unit Versions of CPU Units and Sysmac Studio Versions A-124
A-8-2 Functions That Were Added or Changed for Each Unit Version A-126
A-8-3 Performance Improvements for Unit Version Upgrades A-128

Index

Terms and Conditions Agreement

Warranty, Limitations of Liability

Warranties

Exclusive Warranty

Omron's exclusive warranty is that the Products will be free from defects in materials and workmanship for a period of twelve months from the date of sale by Omron (or such other period expressed in writing by Omron). Omron disclaims all other warranties, express or implied.

Limitations

OMRON MAKES NO WARRANTY OR REPRESENTATION, EXPRESS OR IMPLIED, ABOUT NON-INFRINGEMENT, MERCHANTABILITY OR FITNESS FOR A PARTICULAR PURPOSE OF THE PRODUCTS. BUYER ACKNOWLEDGES THAT IT ALONE HAS DETERMINED THAT THE PRODUCTS WILL SUITABLY MEET THE REQUIREMENTS OF THEIR INTENDED USE.

Omron further disclaims all warranties and responsibility of any type for claims or expenses based on infringement by the Products or otherwise of any intellectual property right.

Buyer Remedy

Omron's sole obligation hereunder shall be, at Omron's election, to (i) replace (in the form originally shipped with Buyer responsible for labor charges for removal or replacement thereof) the non-complying Product, (ii) repair the non-complying Product, or (iii) repay or credit Buyer an amount equal to the purchase price of the non-complying Product; provided that in no event shall Omron be responsible for warranty, repair, indemnity or any other claims or expenses regarding the Products unless Omron's analysis confirms that the Products were properly handled, stored, installed and maintained and not subject to contamination, abuse, misuse or inappropriate modification. Return of any Products by Buyer must be approved in writing by Omron before shipment. Omron Companies shall not be liable for the suitability or unsuitability or the results from the use of Products in combination with any electrical or electronic components, circuits, system assemblies or any other materials or substances or environments. Any advice, recommendations or information given orally or in writing, are not to be construed as an amendment or addition to the above warranty.

See http://www.omron.com/global/ or contact your Omron representative for published information.

Limitation on Liability; Etc

OMRON COMPANIES SHALL NOT BE LIABLE FOR SPECIAL, INDIRECT, INCIDENTAL, OR CONSEQUENTIAL DAMAGES, LOSS OF PROFITS OR PRODUCTION OR COMMERCIAL LOSS IN ANY WAY CONNECTED WITH THE PRODUCTS, WHETHER SUCH CLAIM IS BASED IN CONTRACT, WARRANTY, NEGLIGENCE OR STRICT LIABILITY.

Further, in no event shall liability of Omron Companies exceed the individual price of the Product on which liability is asserted.

Application Considerations

Suitability of Use

Omron Companies shall not be responsible for conformity with any standards, codes or regulations which apply to the combination of the Product in the Buyer's application or use of the Product. At Buyer's request, Omron will provide applicable third party certification documents identifying ratings and limitations of use which apply to the Product. This information by itself is not sufficient for a complete determination of the suitability of the Product in combination with the end product, machine, system, or other application or use. Buyer shall be solely responsible for determining appropriateness of the particular Product with respect to Buyer's application, product or system. Buyer shall take application responsibility in all cases.

NEVER USE THE PRODUCT FOR AN APPLICATION INVOLVING SERIOUS RISK TO LIFE OR PROPERTY WITHOUT ENSURING THAT THE SYSTEM AS A WHOLE HAS BEEN DESIGNED TO ADDRESS THE RISKS, AND THAT THE OMRON PRODUCT(S) IS PROPERLY RATED AND INSTALLED FOR THE INTENDED USE WITHIN THE OVERALL EQUIPMENT OR SYSTEM.

Programmable Products

Omron Companies shall not be responsible for the user's programming of a programmable Product, or any consequence thereof.

Disclaimers

Performance Data

Data presented in Omron Company websites, catalogs and other materials is provided as a guide for the user in determining suitability and does not constitute a warranty. It may represent the result of Omron's test conditions, and the user must correlate it to actual application requirements. Actual performance is subject to the Omron's Warranty and Limitations of Liability.

Change in Specifications

Product specifications and accessories may be changed at any time based on improvements and other reasons. It is our practice to change part numbers when published ratings or features are changed, or when significant construction changes are made. However, some specifications of the Product may be changed without any notice. When in doubt, special part numbers may be assigned to fix or establish key specifications for your application. Please consult with your Omron's representative at any time to confirm actual specifications of purchased Product.

Errors and Omissions

Information presented by Omron Companies has been checked and is believed to be accurate; however, no responsibility is assumed for clerical, typographical or proofreading errors or omissions.

Safety Precautions

Definition of Precautionary Information

The following notation is used in this manual to provide precautions required to ensure safe usage of an NJ-series Controller. The safety precautions that are provided are extremely important to safety. Always read and heed the information provided in all safety precautions.
The following notation is used.

WARNING	Indicates a potentially hazardous situation which, if not avoided, could result in death or serious injury. Additionally, there may be severe property damage.
Caution	Indicates a potentially hazardous situation which, if not avoided, may result in minor or moderate injury, or property damage.

Precautions for Safe Use
Indicates precautions on what to do and what not to do to ensure safe usage of the product.

Precautions for Correct Use
Indicates precautions on what to do and what not to do to ensure proper operation and performance.

Symbols

The circle and slash symbol indicates operations that you must not do.
The specific operation is shown in the circle and explained in text.
This example indicates prohibiting disassembly.

The triangle symbol indicates precautions (including warnings).
The specific operation is shown in the triangle and explained in text.
This example indicates a precaution for electric shock.

The triangle symbol indicates precautions (including warnings).
The specific operation is shown in the triangle and explained in text.
This example indicates a general precaution.

The filled circle symbol indicates operations that you must do.
The specific operation is shown in the circle and explained in text.
This example shows a general precaution for something that you must do.

The triangle symbol indicates precautions (including warnings).
The specific operation is shown in the triangle and explained in text.
This example indicates a precaution for high temperatures.

Warnings

⚠ WARNING

During Power Supply

Do not touch any of the terminals or terminal blocks while the power is being supplied. Doing so may result in electric shock.

Do not attempt to take any Unit apart. In particular, high-voltage parts are present in the Power Supply Unit while power is supplied or immediately after power is turned OFF. Touching any of these parts may result in electric shock. There are sharp parts inside the Unit that may cause injury.

Fail-safe Measures

Provide safety measures in external circuits to ensure safety in the system if an abnormality occurs due to malfunction of the CPU Unit, slaves, or Units or due to other external factors affecting operation. Not doing so may result in serious accidents due to incorrect operation.

Emergency stop circuits, interlock circuits, limit circuits, and similar safety measures must be provided in external control circuits.

The Controller outputs may remain ON or OFF due to deposition or burning of the output relays or destruction of the output transistors. As a countermeasure for such problems, external safety measures must be provided to ensure safe operation of the system.

The CPU Unit will turn OFF all outputs from Basic Output Units in the following cases. The slaves will operate according to the settings in the slaves.

- If an error occurs in the power supply
- If the power supply connection becomes faulty
- If a CPU watchdog timer error or CPU reset occurs
- If a major fault level Controller error occurs
- While the CPU Unit is on standby until RUN mode is entered after the power is turned ON

External safety measures must be provided to ensure safe operation of the system in such cases.

If external power supplies for slaves or other devices are overloaded or short-circuited, the voltage will drop, outputs will turn OFF, and the system may be unable to read inputs. Provide external safety measures in controls with monitoring of external power supply voltage as required so that the system operates safely in such a case.

Unintended outputs may occur when an error occurs in variable memory or in memory used for CJ-series Units. As a countermeasure for such problems, external safety measures must be provided to ensure safe operation of the system.

Provide measures in the communications system and user program to ensure safety in the overall system even if errors or malfunctions occur in data link communications or remote I/O communications.

If there is interference in remote I/O communications or if a major fault level error occurs, output status will depend on the products that are used. Confirm the operation that will occur when there is interference in communications or a major fault level error, and implement safety measures. Correctly set all of the settings in the slaves and Units.

The NJ-series Controller continues normal operation for a certain period of time when a momentary power interruption occurs. This means that the NJ-series Controller may receive incorrect signals from external devices that are also affected by the power interruption. Accordingly, take suitable actions, such as external fail-safe measures and interlock conditions, to monitor the power supply voltage of the external device as required.

You must take fail-safe measures to ensure safety in the event of incorrect, missing, or abnormal signals caused by broken signal lines, momentary power interruptions, or other causes. Not doing so may result in serious accidents due to incorrect operation.

Voltage and Current Inputs

Make sure that the voltages and currents that are input to the slaves and Units are within the specified ranges.
Inputting voltages or currents that are outside of the specified ranges may cause accidents or fire.

Downloading

Always confirm safety at the destination before you transfer a user program, configuration data, setup data, device variables, or values in memory used for CJ-series Units from the Sysmac Studio. The devices or machines may perform unexpected operation regardless of the operating mode of the CPU Unit.

Actual Operation

Check the user program, data, and parameter settings for proper execution before you use them for actual operation.

Cautions

⚠ Caution

Application

Do not touch any Unit when power is being supplied or immediately after the power supply is turned OFF. Doing so may result in burn injury.

Wiring

Be sure that all terminal screws and cable connector screws are tightened to the torque specified in the relevant manuals. The loose screws may result in fire or malfunction.

Online Editing

Execute online editing only after confirming that no adverse effects will be caused by deviations in the timing of I/O. If you perform online editing, the task execution time may exceed the task period, I/O may not be refreshed with external devices, input signals may not be read, and output timing may change.

Precaution on Error Message That Says an Instruction May Cause Unintended Operation

Instructions may results in unexpected operation and affect the system if you clear the selection of the *Detect an error when an in-out variable is passed to specific instruction argument* Check Box in the Program Check Area. Always confirm that the conditions for use that are given in the *NJ-series Instructions Reference Manual* (Cat. No. W502) are met before you clear the selection of this check box.

Version Information

This error message is displayed by and the above option setting is available on Sysmac Studio version 1.02.

Precautions for Safe Use

Disassembly and Dropping

- Do not attempt to disassemble, repair, or modify any Units. Doing so may result in malfunction or fire.
- Do not drop any Unit or subject it to abnormal vibration or shock. Doing so may result in Unit malfunction or burning.

Mounting

- The sliders on the tops and bottoms of the Power Supply Unit, CPU Unit, I/O Units, and other Units must be completely locked (until they click into place) after connecting the adjacent Unit connectors.

Installation

- Always connect to a ground of 100 Ω or less when installing the Units. A ground of 100 Ω or less must be installed when shorting the GR and LG terminals on the Power Supply Unit.

Wiring

- Follow the instructions in this manual to correctly perform wiring.
  Double-check all wiring and switch settings before turning ON the power supply.
- Use crimp terminals for wiring.
  Do not connect bare stranded wires directly to terminals.
- Do not pull on the cables or bend the cables beyond their natural limit.
  Do not place heavy objects on top of the cables or other wiring lines. Doing so may break the cables.
- Mount terminal blocks and connectors only after checking the mounting location carefully.
  Be sure that the terminal blocks, expansion cables, and other items with locking devices are properly locked into place.
- Always remove any dustproof labels that are on the top of the Units when they are shipped before you turn ON the power supply. If the labels are not removed, heat will accumulate and malfunctions may occur.
- Before you connect a computer to the CPU Unit, disconnect the power supply plug of the computer from the AC outlet. Also, if the computer has an FG terminal, make the connections so that the FG terminal has the same electrical potential as the GR terminal on the Power Supply Unit. A difference in electrical potential between the computer and Controller may cause failure or malfunction.
- If the external power supply to an Output Unit or slave has polarity, connect it with the correct polarity. If the polarity is reversed, current may flow in the reverse direction and damage the connected devices regardless of the operation of the Controller.

Power Supply Design

- Do not exceed the rated supply capacity of the Power Supply Units in the NJ-series Controller. The rated supply capacities are given in the *NJ-series CPU Unit Hardware User's Manual* (Cat. No. W500).
  If the capacity is exceeded, operation may stop, malfunctions may occur, or data may not be backed up normally for power interruptions.
  Use NJ-series Power Supply Units for both the NJ-series CPU Rack and Expansion Racks.
  Operation is not possible if a CJ-series Power Supply Unit is used with an NJ-series CPU Unit or an NJ-series Power Supply Unit is used with a CJ-series CPU Unit.

- Do not apply voltages or connect loads to the Output Units or slaves in excess of the maximum ratings.
- Surge current occurs when the power supply is turned ON. When selecting fuses or breakers for external circuits, consider the above precaution and allow sufficient margin in shut-off performance. Refer to the relevant manuals for surge current specifications. Refer to the *NJ-series CPU Unit Hardware User's Manual* (Cat. No. W500) for surge current specifications.
- If the full dielectric strength voltage is applied or turned OFF using the switch on the tester, the generated impulse voltage may damage the Power Supply Unit. Use the adjustment on the tester to gradually increase and decrease the voltage.
- Apply the voltage between the Power Supply Unit's L1 or L2 terminal and the GR terminal when testing insulation and dielectric strength.
- Do not supply AC power from an inverter or other device with a square-wave output. Internal temperature rise may result in smoking or burning. Always input a sinusoidal wave with the frequency that is given in the *NJ-series CPU Unit Hardware User's Manual* (Cat. No. W500).
- Install external breakers and take other safety measures against short-circuiting in external wiring.

Turning ON the Power Supply

- It takes up to approximately 10 to 20 s to enter RUN mode after the power is turned ON. The outputs during this time behave according to the slave or Unit specifications. Use the RUN output on the Power Supply Unit, for example, to implement fail-safe circuits so that external devices do not operate incorrectly.
- Configure the external circuits so that the power supply to the control system turns ON only after the power supply to the Controller has turned ON. If the power supply to the Controller is turned ON after the control power supply, temporary errors may result in incorrect control system signals because the output terminals on Output Units may momentarily turn ON when power supply is turned ON to the Controller.
- If you transfer data from a backup file on an SD Memory Card to the Controller when the power supply is turned ON, properly select the data groups to transfer. If the data for an unintended data group is transferred to the Controller, it may cause the equipment to operate unpredictably.
- Never turn OFF the power supply to the Controller until RUN mode is entered after the power is turned ON. If the power supply is turned OFF, a Battery-backup Memory Check Error may occur at next time you start operation. If a Battery-backup Memory Check Error occurs, the variables retained are set to their initial values and the Holding, DM and EM Areas in memory used for CJ-series Units are cleared to all zeros. If you want to resume the operation, reload the correct data for the variables retained and CJ-series Unit memory, as required.

Turning OFF the Power Supply

- Never turn OFF the power supply to the Controller when the BUSY indicator is flashing. While the BUSY indicator is lit, the user program and settings in the CPU Unit are being backed up in the built-in non-volatile memory. This data will not be backed up correctly if the power supply is turned OFF. Also, a major fault level Controller error will occur the next time you start operation, and operation will stop.
- Do not turn OFF the power supply or remove the SD Memory Card while SD Memory Card access is in progress (i.e., while the SD BUSY indicator flashes). Data may become corrupted, and the Controller will not operate correctly if it uses corrupted data. To remove the SD Memory Card from the CPU Unit while the power supply is ON, press the SD Memory Card power supply switch and wait for the SD BUSY indicator to turn OFF before you remove the SD Memory Card.
- Do not disconnect the cable or turn OFF the power supply to the Controller when downloading data or the user program from Support Software.
- Always turn OFF the power supply to the Controller before you attempt any of the following.
  - Mounting or removing I/O Units or the CPU Unit
  - Assembling the Units

- Setting DIP switches or rotary switches
- Connecting cables or wiring the system
- Connecting or disconnecting the connectors

The Power Supply Unit may continue to supply power to the rest of the Controller for a few seconds after the power supply turns OFF. The PWR indicator is lit during this time. Confirm that the PWR indicator is not lit before you perform any of the above.

Operation

- Confirm that no adverse effect will occur in the system before you attempt any of the following.
  - Changing the operating mode of the CPU Unit (including changing the setting of the Startup Mode)
  - Changing the user program or settings
  - Changing set values or present values
  - Forced refreshing
- After you change any slave or Unit settings, carefully check the safety of the controlled system before you restart the Unit.
- If two different function modules are used together, such as when you use CJ-series Basic Units and EtherCAT slaves, take suitable measures in the user program and external controls to ensure that safety is maintained in the controlled system if one of the function modules stops. The relevant outputs will behave according to the slave or Unit specifications if a partial fault level error occurs in one of the function modules.
- Always confirm safety at the connected equipment before you reset Controller errors with an event level of partial fault or higher for the EtherCAT Master Function Module.
  When the error is reset, all slaves that were in any state other than Operational state due to a Controller error with an event level of partial fault or higher (in which outputs are disabled) will go to Operational state and the outputs will be enabled.
  Before you reset all errors or restart a slave, confirm that no Controller errors with an event level of partial fault have occurred for the EtherCAT Master Function Module.
- Always confirm safety at the connected equipment before you reset Controller errors for a CJ-series Special Unit. When a Controller error is reset, the Unit where the Controller error with an event level of observation or higher will be restarted.
  Before you reset all errors, confirm that no Controller errors with an event level of observation or higher have occurred for the CJ-series Special Unit. Observation level events do not appear on the Controller Error Tab Page, so it is possible that you may restart the CJ-series Special Unit without intending to do so.
  You can check the status of the *_CJB_UnitErrSta[0,0]* to *_CJB_UnitErrSta[3,9]* error status variables on a Watch Tab Page to see if an observation level Controller error has occurred.

Battery Backup

- The user program and initial values for the variables are stored in non-volatile memory in the CPU Unit. The present values of variables with the Retain attribute and the values of the Holding, DM, and EM Areas in the memory used for CJ-series Units are backed up by a Battery. If the Battery is not connected or the Battery is exhausted, the CPU Unit detects a Battery-backup Memory Check Error. If that error is detected, variables with a Retain attribute are set to their initial values and the Holding, DM, and EM Areas in memory used for CJ-series Units are cleared to all zeros. Perform thorough verifications and provide sufficient measures to ensure that the devices perform safe operation for the initial values of the variables with Retain attributes and the resulting operation.
- The absolute encoder home offsets are backed up by a Battery. If the CPU Unit detects a low battery voltage or the absence of a mounted battery when the power supply to the Controller is turned ON, the absolute encoder home offsets are cleared to zeros and an Encoder Home Offset Read Error occurs. Reset the error and perform homing to define home. If you do not define home, unintended operation of the controlled system may occur.

Debugging

- Forced refreshing ignores the results of user program execution and refreshes I/O with the specified values. If forced refreshing is used for inputs for which I/O refreshing is not supported, the inputs will first take the specified values, but they will then be overwritten by the user program. This operation differs from the force-set/reset functionality of the CJ-series PLCs.
- You cannot upload or download information for forced refreshing with the Sysmac Studio.
  After downloading data that contains forced refreshing, change to RUN mode and then use the Sysmac Studio to perform the operation for forced refreshing.
  Depending on the difference in the forced status, the control system may operate unexpectedly.
- Do not specify the same address for the AT specification for more than one variable.
  Doing so would allow the same entity to be accessed with different variable names, which would make the user program more difficult to understand and possibly cause programming mistakes.

General Communications

- When you use data link communications, check the error information that is given in *_ErrSta* (Controller Error Status) to make sure that no error has occurred in the source device. Create a user program that uses reception data only when there is no error in the source device. If there is an error in the source device, the data for the data link may contain incorrect values.
- Unexpected operation may result if inappropriate data link tables are set. Even if appropriate data link tables have been set, confirm that the controlled system will not be adversely affected before you transfer the data link tables. The data links start automatically after the data link tables are transferred.
- All CPU Bus Units are restarted when routing tables are transferred from Support Software to the CPU Unit. Confirm that the system will not be adversely affected by restarting before you transfer the routing tables.
- Tag data links will stop between related nodes while tag data link parameters are transferred during Controller operation. Confirm that the system will not be adversely affected before you transfer the tag data link parameters.

EtherNet/IP Communications

- All related EtherNet/IP nodes are reset when you transfer settings for the built-in EtherNet/IP port (including IP addresses and tag data links settings). Confirm that the system will not be adversely affected by resetting nodes before you transfer the settings.
- If EtherNet/IP tag data links (cyclic communications) are used with a repeating hub, the communications load on the network will increase. This will increase collisions and may prevent stable communications. Do not use repeating hubs on networks where tag data links are used. Use an Ethernet switch instead.

EtherCAT Communications

- Make sure that the communications distance, number of nodes connected, and method of connection for EtherCAT are within specifications.
  Do not connect EtherCAT communications to EtherNet/IP, a standard in-house LAN, or other networks. An overload may cause the network to fail or malfunction.
- Malfunctions or unexpected operation may occur for some combinations of EtherCAT revisions of the master and slaves. If you disable the revision check in the network settings, use the Sysmac Studio to check the slave revision settings in the master and the actual slave revisions, and then make sure that functionality is compatible in the slave manuals or other references. You can check the actual slave revisions from the Sysmac Studio or on slave nameplates.

- After you transfer the user program, the CPU Unit is restarted and communications with the EtherCAT slaves are cut off. During that period, the slave outputs behave according to the slave specifications. The time that communications are cut off depends on the EtherCAT network configuration.
  Before you transfer the user program, confirm that the system will not be adversely affected.
- If the Fail-soft Operation parameter is set to stop operation, process data communications will stop for all slaves when an EtherCAT communications error is detected in a slave. At that time, the Servo Drive will operate according to the Servo Drive specifications. For this reason, if Servo Drives are connected, the Servos for all axes will be turned OFF. Make sure that the Fail-soft Operation parameter setting results in safe operation when a device error occurs.
- EtherCAT communications are not always established immediately after the power supply is turned ON. Use the system-defined variables in the user program to confirm that communications are established before attempting control operations.
- If noise occurs or an EtherCAT slave is disconnected from the network, any current communications frames may be lost. If frames are lost, slave I/O data is not communicated, and unintended operation may occur. The slave outputs will behave according to the slave specifications. If a noise countermeasure or slave replacement is required, perform the following processing.
  - Program the *_EC_InDataInvalid* (Input Data Disable) system-defined variable as an interlock condition in the user program.
  - Set the PDO communications timeout detection count setting in the EtherCAT master to at least 2. Refer to the *NJ-series CPU Unit Built-in EtherCAT Port User's Manual* (Cat. No. W505) for details.
- When an EtherCAT slave is disconnected or disabled, communications will stop and control of the outputs will be lost not only for the disconnected slave, but for all slaves connected after it. Confirm that the system will not be adversely affected before you disconnect or disable a slave.
- NX bus communications are not always established immediately after the power supply is turned ON. Use the system-defined variables and the EtherCAT Coupler Unit device variables in the user program to confirm that communications are established before attempting control operations.
- You cannot use standard Ethernet hubs or repeater hubs with EtherCAT communications. If you use one of these, a major fault level error or other error may occur.

Motion Control

- Confirm the axis number carefully before you perform an MC Test Run.
- The motor is stopped if communications are interrupted between the Sysmac Studio and the CPU Unit during an MC Test Run. Connect the communications cable between the computer and CPU Unit securely and confirm that the system will not be adversely affected before you perform an MC Test Run.
- Always execute the Save Cam Table instruction if you change any of the cam data from the user program in the CPU Unit or from the Sysmac Studio. If the cam data is not saved, the previous condition will be restored when the power is turned ON again, possibly causing unexpected machine operation.
- The positive drive prohibit input (POT), negative drive prohibit input (NOT), and home proximity input (DEC) of the Servo Drive are used by the MC Function Module as the positive limit input, negative limit input, and home proximity input. Make sure that the signal widths for all of these input signals are longer than the control period of the MC Function Module. If the input signal widths are shorter than the control period, the MC Function Module may not be able to detect the input signals, resulting in incorrect operation.
- If you make any changes in the Detailed Settings Area of the Axis Basic Settings Display of the Sysmac Studio, make sure that the devices or machines perform the expected operation before you start actual operation.
  If the relationship between the functions of the Motion Control Function Module and the EtherCAT slave process data that is assigned to the axes is not correct, the devices or machines may perform unexpected operation.

Restoring Data

- You cannot back up, restore, or compare some or all of the settings for certain slaves and Units. Also, you cannot back up, restore, or compare data for disabled slaves or Units. After you restore data, sufficiently confirm that operation is correct before you start actual operation.
- The absolute encoder home offsets are backed up with a Battery in the CPU Unit as absolute encoder information. If any of the following conditions is met, clear the absolute encoder home offsets from the list of data items to restore, and then restore the data. Then, define the absolute encoder home again. If you do not define home, unintended operation of the controlled system may occur.
  - The Servomotor or Servo Drive was changed since the data was backed up.
  - The absolute encoder was set up after the data was backed up.
  - The absolute data for the absolute encoder was lost.

Battery Replacement

- The Battery may leak, rupture, heat, or ignite. Never short-circuit, charge, disassemble, heat, or incinerate the Battery or subject it to strong shock.
- Dispose of any Battery that has been dropped on the floor or otherwise subjected to excessive shock. Batteries that have been subjected to shock may leak if they are used.
- UL standards require that only an experienced engineer replace the Battery. Make sure that an experienced engineer is in charge of Battery replacement.
- Apply power for at least five minutes before changing the Battery. Install a new Battery within five minutes (at 25°C) of turning OFF the power supply. If power is not supplied for at least 5 minutes, the saved data may be lost.
- We recommend replacing the Battery with the power turned OFF to prevent the CPU Unit's sensitive internal components from being damaged by static electricity and to prevent malfunctions. The Battery can be replaced without turning OFF the power supply. To do so, always touch a grounded piece of metal to discharge static electricity from your body before you start the procedure.
  After you replace the Battery, connect the Sysmac Studio and clear the Low Battery Voltage error.

Unit Replacement

- Make sure that the required data, including the user program, configurations, settings, variables, and memory used for CJ-series Units, is transferred to a CPU Unit that was replaced and to externally connected devices before restarting operation.
  Be sure to include the tag data link settings, routing tables, and other CPU Bus Unit data, which are stored in the CPU Unit.
- The absolute encoder home offsets are backed up with a Battery in the CPU Unit as absolute encoder information. When you change the combination of the CPU Unit and Servomotor, e.g., when you add or replace a Servomotor, define the absolute encoder home again.

Disposal

- Dispose of the product and Batteries according to local ordinances as they apply.

- The following information must be displayed for all products that contain primary lithium batteries with a perchlorate content of 6 ppb or higher when shipped to or transported through the State of California, USA.
  Perchlorate Material - special handling may apply.
  See www.dtsc.ca.gov/hazardouswaste/perchlorate.
- The CPU Unit contains a primary lithium battery with a perchlorate content of 6 ppb or higher. Place the above information on the individual boxes and shipping boxes when shipping finished products that contain a CPU Unit to the State of California, USA.

Precautions for Correct Use

Storage, Mounting, and Wiring

- Do not operate or store the Controller in the following locations. Operation may stop or malfunctions may occur.
  - Locations subject to direct sunlight
  - Locations subject to temperatures or humidity outside the range specified in the specifications
  - Locations subject to condensation as the result of severe changes in temperature
  - Locations subject to corrosive or flammable gases
  - Locations subject to dust (especially iron dust) or salts
  - Locations subject to exposure to water, oil, or chemicals
  - Locations subject to shock or vibration
- Take appropriate and sufficient countermeasures when installing the Controller in the following locations.
  - Locations subject to strong, high-frequency noise
  - Locations subject to static electricity or other forms of noise
  - Locations subject to strong electromagnetic fields
  - Locations subject to possible exposure to radioactivity
  - Locations close to power lines
- Before touching a Unit, be sure to first touch a grounded metallic object in order to discharge any static build-up.
- Install the Controller away from sources of heat and ensure proper ventilation. Not doing so may result in malfunction, in operation stopping, or in burning.
- An I/O bus check error will occur and the Controller will stop if an I/O Connecting Cable's connector is disconnected from the Rack. Be sure that the connectors are secure.
- Do not allow foreign matter to enter the openings in the Unit. Doing so may result in Unit burning, electric shock, or failure.
- Do not allow wire clippings, shavings, or other foreign material to enter any Unit. Otherwise, Unit burning, failure, or malfunction may occur. Cover the Units or take other suitable countermeasures, especially during wiring work.
- For EtherCAT and EtherNet/IP, use the connection methods and cables that are specified in the *NJ-series CPU Unit Built-in EtherCAT Port User's Manual* (Cat. No. W505) and the *NJ-series CPU Unit Built-in EtherNet/IP Port User's Manual* (Cat. No. W506). Otherwise, communications may be faulty.
- Use the rated power supply voltage for the Power Supply Units. Take appropriate measures to ensure that the specified power with the rated voltage and frequency is supplied in places where the power supply is unstable.
- Make sure that the current capacity of the wire is sufficient. Otherwise, excessive heat may be generated. When cross-wiring terminals, the total current for all the terminals will flow in the wire. When wiring cross-overs, make sure that the current capacity of each of the wires is not exceeded.
- Do not touch the terminals on the Power Supply Unit immediately after turning OFF the power supply. Residual voltage may cause electrical shock.
- If you use reed switches for the input contacts for AC Input Units, use switches with a current capacity of 1 A or greater.
  If the capacity of the reed switches is too low, surge current may fuse the contacts.

Error Processing

- In applications that use the results of instructions that read the error status, consider the affect on the system when errors are detected and program error processing accordingly. For example, even the detection of a minor error, such as Battery replacement during operation, can affect the system depending on how the user program is written.
- If you change the event level of a Controller error, the output status when the error occurs may also change. Confirm safety before you change an event level.

Restoring and Automatically Transferring Data

- When you edit the restore command file or the automatic transfer command file, do not change anything in the file except for the “yes” and “no” specifications for the selectable data groups. If you change anything else in the file, the Controller may perform unexpected operation when you restore or automatically transfer the data.

Replacing Slaves and Units

- If you replace a slave or Unit, refer to the operation manual for the slave or Unit for information on the data required for individual slaves or Units and redo the necessary settings.

Task Settings

- If a Task Period Exceeded error occurs, shorten the programs to fit in the task period or increase the setting of the task period.

Motion Control

- Use the system-defined variable in the user program to confirm that EtherCAT communications are established before you attempt to execute motion control instructions. Motion control instructions are not executed normally if EtherCAT communications are not established.
- Use the system-defined variables to monitor for errors in communications with the slaves that are controlled by the motion control function module. Motion control instructions are not executed normally if an error occur in slave communications.
- Before you start an MC Test Run, make sure that the operation parameters are set correctly.
- Do not download motion control settings during an MC Test Run.

EtherCAT Communications

- If you need to disconnect the cable from an EtherCAT slave during operation, first disconnect the software connection to the EtherCAT slave or disable the EtherCAT slave and all of the EtherCAT slaves that are connected after it.
- Set the Servo Drives to stop operation if an error occurs in EtherCAT communications between the Controller and a Servo Drive.
- Make sure that all of the slaves to be restored are participating in the network before you reset a Network Configuration Verification Error, Process Data Communications Error, or Link OFF Error in the EtherCAT Master Function Module. If any slave is not participating when any of these errors is reset, the EtherCAT Master Function Module may access slave with a different node address than the specified node address or the error may not be reset correctly.
- Always use the specified EtherCAT slave cables. If you use any other cable, the EtherCAT master or the EtherCAT slaves may detect an error and one of the following may occur.
  - Continuous refreshing of process data communications will not be possible.
  - Continuous refreshing of process data communications will not end during the set cycle.

Battery Replacement

- Be sure to install a replacement Battery within two years of the production date shown on the Battery label.
- Turn ON the power after replacing the Battery for a CPU Unit that has been unused for a long time. Leaving the CPU Unit unused again without turning ON the power even once after the Battery is replaced may result in a shorter Battery life.
- When you replace the Battery, use the CJ1W-BAT01 Battery Set.

SD Memory Cards

- Insert the SD Memory Card all the way.
- Do not turn OFF the power supply to the Controller during SD Memory Card access. The files may be corrupted.
  If there is a corrupted file in the SD Memory Card, the file is automatically deleted by the restoration function when the power supply is turned ON.

Online Editing

When performing online editing in combination of a CPU Unit with a unit version of 1.04 or later and Sysmac Studio version 1.05 or higher, the CPU Unit saves a program updated by the online editing to built-in non-volatile memory. Sysmac Studio shows a message that it is in a backup operation. Do not turn OFF the power supply to the Controller while this message is displayed. If the power supply to the Controller is turned OFF, a Controller error will occur when the power supply is turned ON next time.

Regulations and Standards

Conformance to EC Directives

Applicable Directives

- EMC Directives
- Low Voltage Directive

Concepts

● EMC Directive

OMRON devices that comply with EC Directives also conform to the related EMC standards so that they can be more easily built into other devices or the overall machine. The actual products have been checked for conformity to EMC standards.*
Whether the products conform to the standards in the system used by the customer, however, must be checked by the customer. EMC-related performance of the OMRON devices that comply with EC Directives will vary depending on the configuration, wiring, and other conditions of the equipment or control panel on which the OMRON devices are installed. The customer must, therefore, perform the final check to confirm that devices and the overall machine conform to EMC standards.

* Applicable EMC (Electromagnetic Compatibility) standards are as follows:
EMS (Electromagnetic Susceptibility): EN 61131-2 and EN 61000-6-2
EMI (Electromagnetic Interference): EN 61131-2 and EN 61000-6-4 (Radiated emission: 10-m regulations)

● Low Voltage Directive

Always ensure that devices operating at voltages of 50 to 1,000 VAC and 75 to 1,500 VDC meet the required safety standards. The applicable directive is EN 61131-2.

● Conformance to EC Directives

The NJ-series Controllers comply with EC Directives. To ensure that the machine or device in which the NJ-series Controller is used complies with EC Directives, the Controller must be installed as follows:

- The NJ-series Controller must be installed within a control panel.
- You must use reinforced insulation or double insulation for the DC power supplies connected to DC Power Supply Units and I/O Units.
- NJ-series Controllers that comply with EC Directives also conform to the Common Emission Standard (EN 61000-6-4). Radiated emission characteristics (10-m regulations) may vary depending on the configuration of the control panel used, other devices connected to the control panel, wiring, and other conditions.
  You must therefore confirm that the overall machine or equipment complies with EC Directives.

Conformance to KC Standards

Observe the following precaution if you use NX-series Units in Korea.

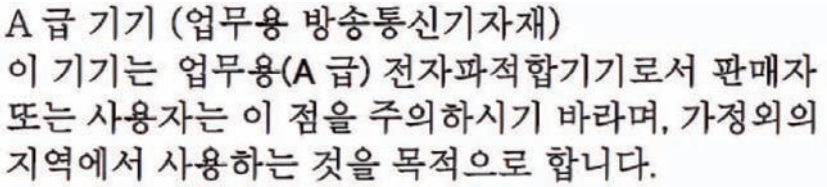

Class A Device (Broadcasting Communications Device for Office Use)

This device obtained EMC registration for office use (Class A), and it is intended to be used in places other than homes.

Sellers and/or users need to take note of this.

Conformance to Shipbuilding Standards

The NJ-series Controllers comply with the following shipbuilding standards. Applicability to the shipbuilding standards is based on certain usage conditions. It may not be possible to use the product in some locations. Contact your OMRON representative before attempting to use a Controller on a ship.

Usage Conditions for NK and LR Shipbuilding Standards

- The NJ-series Controller must be installed within a control panel.
- Gaps in the door to the control panel must be completely filled or covered with gaskets or other material.
- The following noise filter must be connected to the power supply line.

Noise Filter

Manufacturer	Model
Cosel Co., Ltd.	TAH-06-683

Software Licenses and Copyrights

This product incorporates certain third party software. The license and copyright information associated with this software is available at http://www.fa.omron.co.jp/nj_info_e/.

Unit Versions

Unit Versions

A “unit version” has been introduced to manage CPU Units in the NJ Series according to differences in functionality accompanying Unit upgrades.

Notation of Unit Versions on Products

The unit version is given on the ID information label of the products for which unit versions are managed, as shown below.

Example for NJ-series NJ501-□□□□ CPU Unit:

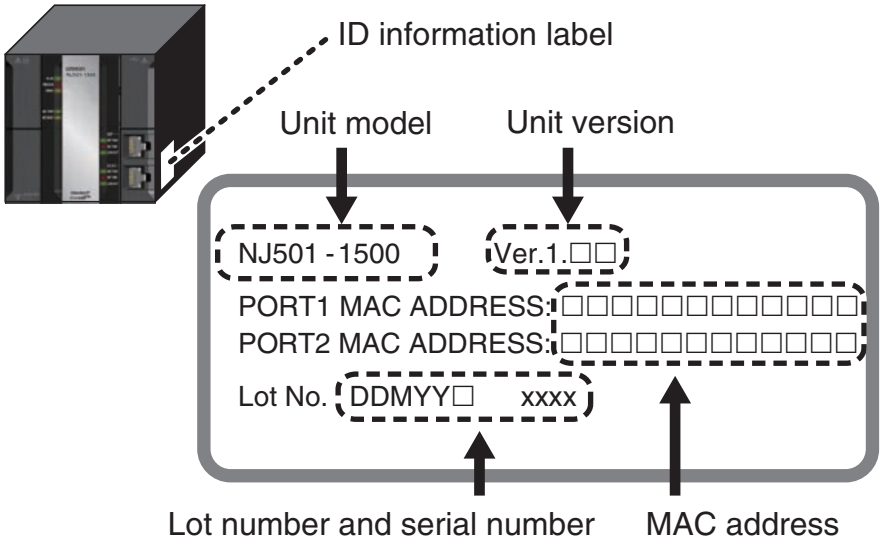

The following information is provided on the ID information label.

Item	Description
Unit model	Gives the model of the Unit.
Unit version	Gives the unit version of the Unit.
Lot number and serial number	Gives the lot number and serial number of the Unit. DDMYY: Lot number, □: For use by OMRON, xxxx: Serial number “M” gives the month (1 to 9: January to September, X: October, Y: November, Z: December)
MAC address	Gives the MAC address of the built-in port on the Unit.

Confirming Unit Versions with Sysmac Studio

You can use the Unit Production Information on the Sysmac Studio to check the unit version of the CPU Unit, CJ-series Special I/O Units, CJ-series CPU Bus Units, and EtherCAT slaves. The unit versions of CJ-series Basic I/O Units cannot be checked from the Sysmac Studio.

● CPU Unit and CJ-series Units

1 Double-click **CPU/Expansion Racks** under **Configurations and Setup** in the Multiview Explorer. Or, right-click **CPU/Expansion Racks** under **Configurations and Setup** and select ***Edit*** from the menu.

The Unit Editor is displayed for the Controller Configurations and Setup layer.

2 Right-click any open space in the Unit Editor and select ***Production Information***.

The Production Information Dialog Box is displayed.

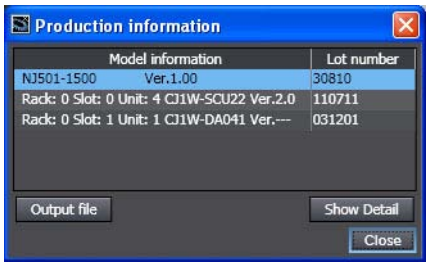

Simple Display

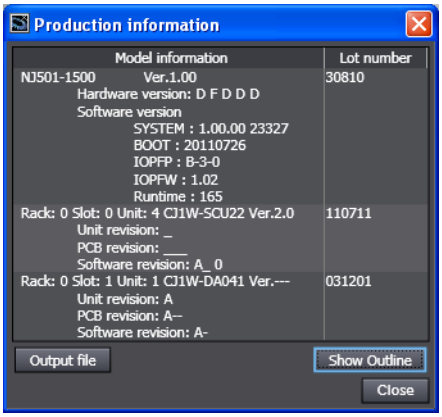

Detailed Display

In this example, “Ver.1.00” is displayed next to the unit model.

The following items are displayed.

CPU Unit	CJ-series Units
Unit model	Unit model
Unit version	Unit version
Lot number	Lot number
	Rack number, slot number, and unit number

● EtherCAT Slaves

1 Double-click **EtherCAT** under **Configurations and Setup** in the Multiview Explorer. Or, right-click **EtherCAT** under **Configurations and Setup** and select ***Edit*** from the menu.

The EtherCAT Tab Page is displayed for the Controller Configurations and Setup layer.

2 Right-click the master in the EtherCAT Tab Page and select ***Display Production Information***.

The Production Information Dialog Box is displayed.

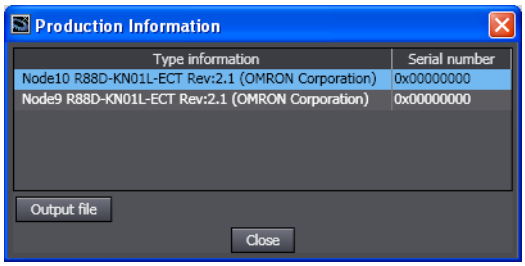

The following items are displayed.
Node address
Type information*
Serial number

* If the model number cannot be determined (such as when there is no ESI file), the vendor ID, product code, and revision number are displayed.

Confirming Unit Versions with System-defined Variable

You can access the *_UnitVersion* (Unit Version) system-defined variable from the user program to check the unit version of the CPU Unit.

_UnitVersion is an USINT array variable with two elements. *_UnitVersion[0]* and *_UnitVersion[1]* correspond to the integer part and the fractional part of the unit version, respectively.

Version Information

A CPU Unit with unit version 1.08 or later and the Sysmac Studio version 1.09 or higher are required to confirm the unit version using the system-defined variable.

Additional Information

Refer to the manual for the specific Unit for the unit versions of the CPU Units, Communications Coupler Units, NX Units, and Safety Control Units to which the database connection service and other functions were added.

Unit Versions and Sysmac Studio Versions

The functions that are supported depend on the unit version of the NJ-series CPU Unit. The version of Sysmac Studio that supports the functions that were added for an upgrade is also required to use those functions. Refer to *A-8 Version Information* for the relationship between the unit versions of the CPU Units and the Sysmac Studio versions, and for the functions that are supported by each unit version.

Unit Version Notation

In this manual, unit versions are specified as shown in the following table.

Product nameplate	Notation in this manual	Remarks
"Ver.1.0" or later to the right of the lot number	Unit version 1.0 or later	Unless unit versions are specified, the information in this manual applies to all unit versions.

Related Manuals

The followings are the manuals related to this manual. Use these manuals for reference.

Manual name	Cat. No.	Model numbers	Application	Description
NJ-series CPU Unit Hardware User's Manual	W500	NJ501-□□□□ NJ301-□□□□	Learning the basic specifications of the NJ-series CPU Units, including introductory information, designing, installation, and maintenance. Mainly hardware information is provided.	An introduction to the entire NJ-series system is provided along with the following information on the CPU Unit. • Features and system configuration • Introduction • Part names and functions • General specifications • Installation and wiring • Maintenance and inspection Use this manual together with the *NJ-series CPU Unit Software User's Manual* (Cat. No. W501).
NJ-series CPU Unit Software User's Manual	W501	NJ501-□□□□ NJ301-□□□□	Learning how to program and set up an NJ-series CPU Unit. Mainly software information is provided.	The following information is provided on a Controller built with an NJ501 CPU Unit. • CPU Unit operation • CPU Unit features • Initial settings • Programming based on IEC 61131-3 language specifications Use this manual together with the *NJ-series CPU Unit Hardware User's Manual* (Cat. No. W500).
NJ-series Instructions Reference Manual	W502	NJ501-□□□□ NJ301-□□□□	Learning detailed specifications on the basic instructions of an NJ-series CPU Unit.	The instructions in the instruction set (IEC 61131-3 specifications) are described. When programming, use this manual together with the *NJ-series CPU Unit Hardware User's Manual* (Cat. No. W500) and *NJ-series CPU Unit Software User's Manual* (Cat. No. W501).
NJ-series CPU Unit Motion Control User's Manual	W507	NJ501-□□□□ NJ301-□□□□	Learning about motion control settings and programming concepts.	The settings and operation of the CPU Unit and programming concepts for motion control are described. Use this manual together with the *NJ-series CPU Unit Hardware User's Manual* (Cat. No. W500) and *NJ-series CPU Unit Software User's Manual* (Cat. No. W501).
NJ-series Motion Control Instructions Reference Manual	W508	NJ501-□□□□ NJ301-□□□□	Learning about the specifications of the motion control instructions that are provided by OMRON.	The motion control instructions are described. When programming, use this manual together with the *NJ-series CPU Unit Hardware User's Manual* (Cat. No. W500), *NJ-series CPU Unit Software User's Manual* (Cat. No. W501) and *NJ-series CPU Unit Motion Control User's Manual* (Cat. No. W507).
NJ-series CPU Unit Built-in EtherCAT® Port User's Manual	W505	NJ501-□□□□ NJ301-□□□□	Using the built-in EtherCAT port on an NJ-series CPU Unit.	Information on the built-in EtherCAT port is provided. This manual provides an introduction and provides information on the configuration, features, and setup. Use this manual together with the *NJ-series CPU Unit Hardware User's Manual* (Cat. No. W500) and *NJ-series CPU Unit Software User's Manual* (Cat. No. W501).
NJ-series CPU Unit Built-in EtherNet/IP™ Port User's Manual	W506	NJ501-□□□□ NJ301-□□□□	Using the built-in EtherNet/IP port on an NJ-series CPU Unit.	Information on the built-in EtherNet/IP port is provided. Information is provided on the basic setup, tag data links, and other features. Use this manual together with the *NJ-series CPU Unit Hardware User's Manual* (Cat. No. W500) and *NJ-series CPU Unit Software User's Manual* (Cat. No. W501).
NJ-series Database Connection CPU Units User's Manual	W527	NJ501-1□20	Using the database connection service with NJ-series Controllers	Describes the database connection service.

Manual name	Cat. No.	Model numbers	Application	Description
NJ-series Troubleshooting Manual	W503	NJ501-□□□□ NJ301-□□□□	Learning about the errors that may be detected in an NJ-series Controller.	Concepts on managing errors that may be detected in an NJ-series Controller and information on individual errors are described. Use this manual together with the *NJ-series CPU Unit Hardware User's Manual* (Cat. No. W500) and *NJ-series CPU Unit Software User's Manual* (Cat. No. W501).
Sysmac Studio Version 1 Operation Manual	W504	SYSMAC-SE2□□□	Learning about the operating procedures and functions of the Sysmac Studio.	Describes the operating procedures of the Sysmac Studio.
NX-series Communications Coupler Unit User's Manual	W519	NX-ECC□□□	Leaning how to use an NX-series Communications Coupler Unit and Slave Terminals	Introduces the system, configuration methods, Unit hardware, setting methods, and functions of Slave Terminals that consist of a Communications Coupler Unit and NX Units.
NS-series Programmable Terminals Programming Manual	V073	NS15-□□□□□ NS12-□□□□□ NS10-□□□□□ NS8-□□□□□ NS5-□□□□□	Learning how to use the NS-series Programmable Terminals.	Describes the setup methods, functions, etc. of the NS-series Programmable Terminals.

Terminology

Term	Description
absolute encoder home offset	This data is used to restore in the CPU Unit the actual position of a Servo Drive with an absolute encoder. The offset is the difference between the command position after homing and the absolute data that is read from the absolute encoder.
array specification	One of the variable specifications. An array variable contains multiple elements of the same data type. The elements in the array are specified by serial numbers called subscripts that start from the beginning of the array.
AT	One of the attributes of a variable. This attribute allows the user to specify what is assigned to a variable. An I/O port or an address in memory used for CJ-series Units can be specified.
axes group	A functional unit that groups together axes within the Motion Control Function Module.
Axes Group Variable	A system-defined variable that is defined as a structure and provides status information and some of the axes parameters for an individual axes group. An Axes Group Variable is used to specify an axes group for motion control instructions and to monitor the command interpolation velocity, error information, and other information for the axes group.
axis	A functional unit within the Motion Control Function Module. An axis is assigned to the drive mechanism in an external Servo Drive or the sensing mechanism in an external Encoder Input Slave Unit.
Axis Variable	A system-defined variable that is defined as a structure and provides status information and some of the axis parameters for an individual axis. An Axis Variable is used to specify an axis for motion control instructions and to monitor the command position, error information, and other information for the axis.
basic data type	Any of the data types that are defined by IEC 61131-3. They include Boolean, bit string, integer, real, duration, date, time of day, date and time, and text string data types. "Basic data type" is used as opposed to derivative data types, which are defined by the user.
cam data variable	A variable that represents the cam data as a structure array. A cam data variable is an array structure that consists of phases and displacements.
CJ-series CPU Unit	Any of the CJ-series Units that can be used with an NJ-series Controller.
Communications Coupler Unit	The generic name of an interface unit for remote I/O communications on a network between NX Units and a host network master. For example, an EtherCAT Coupler Unit is a Communications Coupler Unit for an EtherCAT network.
Constant	One of the attributes of a variable. If you specify the Constant attribute for a variable, the value of the variable cannot be written by any instructions, ST operators, or CIP message communications.
Controller	The range of devices that are directly controlled by the CPU Unit. In the NJ-series System, the Controller includes the CPU Rack, Expansion Racks, and EtherCAT slaves (including general-purpose slaves and Servo Drives).
Controller error	Errors that are defined by the NJ-series System. “Controller error” is a collective term for major fault level, partial fault level, minor fault level, and observation Controller events.
Controller event	One of the events in the NJ-series System. Controller events are errors and information that are defined by the system for user notification. A Controller event occurs when the system detects a factor that is defined as a Controller event.
Controller information	Information that is defined by the NJ-series System that is not an error. It represents an information Controller event.
CPU Unit	The Unit that serves as the center of control for a Machine Automation Controller. The CPU Unit executes tasks, refreshes I/O for other Units and slaves, etc. The NJ-series CPU Units include the NJ501-□□□□ and NJ301-□□□□.
derivative data type	A data type that is defined by the user. Structures, unions, and enumerations are derivative data types.
device variable	A variable that is used to access a specific device through an I/O port.

Term	Description
download	To transfer data from the Sysmac Studio to the Controller with the synchronization operation of the Sysmac Studio.
edge	One of the attributes of a variable. This attribute makes a BOOL variable pass TRUE to a function block when the variable changes from FALSE to TRUE or when it changes from TRUE to FALSE.
enumeration	One of the derivative data types. This data type takes one item from a prepared name list of enumerators as its value.
enumerator	One of the values that an enumeration can take expressed as a character string. The value of an enumeration is one of the enumerators.
EtherCAT Master Function Module	One of the function modules. This function module controls the EtherCAT slaves as the EtherCAT master.
EtherNet/IP Function Module	One of the function modules. This function module controls the built-in EtherNet/IP port.
event log	A function that recognizes and records errors and other events.
Event Setup	Settings that define user-defined errors and user-defined information.
event task	A task that executes a user program only once when the task execution conditions are met.
FB	An acronym for "function block."
forced refreshing	Forcing the refreshing of an input from an external device or an output to an external device, e.g., when the user debugs a program. Addresses that are subject to forced refreshing can still be overwritten from the user program.
FUN	An abbreviation for "function."
function	A POU that is used to create an object that determines a unique output for the same input, such as for data processing.
function block	A POU that is used to create an object that can have a different output for the same input, such as for a timer or counter.
function module	One of the functional units of the software configuration of the CPU Unit.
general-purpose slave	Any of the EtherCAT slaves that cannot be assigned to an axis.
global variable	A variable that can be read or written from all POUs (programs, functions, and function blocks).
I/O map settings	Settings that assign variables to I/O ports. Assignment information between I/O ports and variables.
I/O port	A logical interface that is used by the CPU Unit to exchange data with an external device (slave or Unit).
I/O refreshing	Cyclic data exchange with external devices that is performed with predetermined memory addresses.
information	One of the event levels for Controller events or user-defined events. These are not errors, but appear in the event log to notify the user of specific information.
Initial Value	One of the attributes of a variable. The variable is set to the initial value in the following situations. • When power is turned ON • When the CPU Unit changes to RUN mode • When you specify to initialize the values when the user program is transferred • When a major fault level Controller error occurs
inline ST	ST programming that is included within a ladder diagram program.
instruction	The smallest unit of the processing elements that are provided by OMRON for use in POU algorithms. There are ladder diagram instructions (program inputs and outputs), function instructions, function block instructions, and ST statements.
literal	A constant expression that is used in a user program.
local variable	A variable that can be accessed only from inside the POU in which it is defined. “Local variable” is used as opposed to “global variable.” Local variables include internal variables, input variables, output variables, in-out variables, and external variables.
main memory	The memory inside the CPU Unit that is used by the CPU Unit to execute the OS and user program.

Term	Description
major fault level Controller error	An error for which all NJ-series Controller control operations stop. The CPU Unit immediately stops user program execution and turns OFF the loads for all slaves and Units (including remote I/O).
MC Test Run	A function to check motor operation and wiring from the Sysmac Studio.
memory used for CJ-series units	One type of I/O memory in an NJ-series CPU Unit. It contains addresses that can be directly specified by the user. It can be accessed only with variables with an AT attribute. This memory is used to access CJ-series Units and CJ-series networks.
minor fault level Controller error	An error for which part of the control operations for one of the function modules in the NJ-series Controller stop. An NJ-series CPU Unit continues operation even after a minor fault level Controller error occurs.
Motion Control Function Module	One of the function modules. The MC Function Module performs motion control based on commands from the motion control instructions that are executed in the user program.
motion control instruction	A function block instruction that executes motion control. The Motion Control Function Module supports instructions that are based on function blocks for PLCopen® motion control as well as instructions developed specifically for the Motion Control Function Module.
namespace	A system that is used to group and nest the names of functions, function block definitions, and data types.
Network Publish	One of the attributes of a variable. This attribute allows you to use CIP message communications or tag data links to read/write variables from another Controller or from a host computer.
NX Units	Any of the NX-series Units that perform I/O processing with connected external devices. The Communications Coupler Units are not included with the NX Units.
observation	One of the event levels for Controller events or user-defined events. These are minor errors that do not affect control operations, but appear in the event log to notify the user of specific information.
partial fault level Controller error	An error for which all of the control operations for one of the function modules in the NJ-series Controller stop. An NJ-series CPU Unit continues operation even after a partial fault level Controller error.
PDO communications	An abbreviation for process data communications. Data is exchanged between the master and slaves on a process data communications cycle. (The process data communications cycle is the same as the task period of the primary periodic task.)
periodic task	A tasks for which user program execution and I/O refreshing are performed each period.
PLC Function Module	One of the function modules. This function module executes the user program, sends commands to the Motion Control Function Module, and provides an interface to the USB and SD Memory Card.
POU	An acronym for "program organization unit." A POU is a unit in a program execution model that is defined in IEC 61131-3. A POU contains an algorithm and a local variable table and forms the basic unit used to build a user program. There are three types of POUs: programs, functions, and function blocks.
primary periodic task	The task with the highest priority.
process data communications	One type of EtherCAT communications in which process data objects (PDOs) are used to exchange information cyclically and in realtime. Process data communications are also called PDO communications.
program	Along with functions and function blocks, one of the three types of POUs. Programs are assigned to tasks to execute them.
Range Specification	One of the variable specifications. You can specify a range for a variable in advance. The variable can take only values that are in the specified range.

Term	Description
Retain	One of the attributes of a variable. The values of variables with a Retain attribute are held at the following times. (Variables without a Retain attribute are set to their initial values.) • When power is turned ON after a power interruption • When the CPU Unit changes to RUN mode • When you specify to not initialize the values when the user program is transferred
SDO communications	One type of EtherCAT communications in which service data objects (SDOs) are used to transmit information whenever required.
Servo Drive/encoder input slave	Any of the EtherCAT slaves that is assigned to an axis. In the NJ-series System, it would be a Servo Drive or Encoder Input Slave Unit.
slave	A device that performs remote I/O for a master.
slave and Unit configurations	A generic term for the EtherCAT configuration and Unit configuration.
Slave Terminal	A building-block remote I/O terminal to which a Communications Coupler Unit and NX Units are mounted. A Slave Terminal is one type of slave.
Special Unit Setup	A generic term for the settings for a Special Unit, including the settings in allocated DM Area words.
structure	One of the derivative data types. It consists of multiple data types placed together into a layered structure.
synchronization	A function that automatically compares the information in the NJ-series Controller with the information in the Sysmac Studio, displays any differences and locations in a hierarchical form, and can be used to synchronize the information.
Sysmac Studio	A computer software application for setting, programming, debugging, and trouble-shooting NJ-series Controllers. It also provides operations for motion control and a Simulator.
system common processing	System processing that is performed by the CPU Unit to perform I/O refreshing and the user program execution within a task. Exclusive control of variables between tasks, data trace processing, and other processing is performed.
system service	Processing that is performed by the CPU Unit in unused time between task processing. The system service includes communications processing, SD Memory Card access processing, self-diagnosis processing, and other processing.
system-defined variable	A variable for which all attributes are defined by the system and cannot be changed by the user.
task	An attribute that defines when a program is executed.
task period	The interval at which the primary periodic task or a periodic task is executed.
union	One of the derivative data types. It allows you to handle the same data as different data types.
Unit	A device that mounts to the CPU Rack or an Expansion Rack. In NJ-series manuals, it refers to CJ-series Units.
Unit configuration	The configuration information for the Units that are set on the Sysmac Studio. This information tells what Unit models are connected to the CPU Unit and where they are connected.
upload	To transfer data from the Controller to the Sysmac Studio with the synchronization operation of the Sysmac Studio.
user program	All of the programs in one project.
user-defined event	One of the events in the NJ-series System. These events are defined by the user. “User-defined events” is a generic term for user-defined errors and user-defined information.
user-defined variable	A variable for which all of the attributes are defined by the user and can be changed by the user.
variable	A representation of data, such as a numeric value or character string, that is used in a user program. You can change the value of a variable by assigned the required value. “Variable” is used as opposed to “constant,” for which the value does not change.
variable memory	A memory area that contains the present values of variables that do not have AT specifications. It can be accessed only with variables without an AT attribute.

Revision History

A manual revision code appears as a suffix to the catalog number on the front and back covers of the manual.

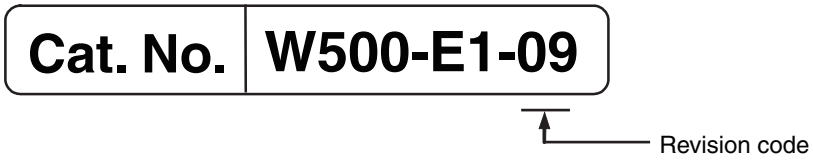

Revision code	Date	Revised content
01	July 2011	Original production
02	March 2012	• Added information on the NJ301-□□□□. • Added information on the functions supported by unit version 1.01 of the CPU Units. • Corrected mistakes.
03	May 2012	• Made changes accompanying release of unit version 1.02 of the CPU Unit.
04	August 2012	• Made changes accompanying release of unit version 1.03 of the CPU Unit.
05	February 2013	• Made changes accompanying release of unit version 1.04 of the CPU Unit.
06	April 2013	• Added information on the NJ501-1□20. • Made changes accompanying release of unit version 1.05 of the CPU Unit.
07	June 2013	• Made changes accompanying release of unit version 1.06 of the CPU Unit.
08	September 2013	• Made changes accompanying release of unit version 1.07 of the CPU Unit.
09	December 2013	• Made changes accompanying release of unit version 1.08 of the CPU Unit.

1

Introduction to NJ-series Controllers

This section describes the features, basic system configuration, specifications, and overall operating procedure of an NJ-series Controller.

1-1 The NJ-series Controllers 1-2
1-1-1 Features 1-2
1-1-2 Introduction to the System Configurations 1-4
1-2 Specifications 1-7
1-3 Overall Operating Procedure for the NJ-series Controller 1-10
1-3-1 Overall Procedure 1-10
1-3-2 Procedure Details 1-11

1-1 The NJ-series Controllers

The SYSMAC NJ-series Controllers are next-generation machine automation controllers that provide the functionality and high-speed performance that are required for machine control. They provide the safety, reliability, and maintainability that are required of industrial controllers.

The NJ-series Controllers provide the functionality of previous OMRON PLCs, and they also provide the functionality that is required for motion control. Synchronized control of I/O devices on high-speed EtherCAT can be applied to safety devices, vision systems, motion equipment, discrete I/O, and more.

OMRON offers the new Sysmac Series of control devices designed with unified communications specifications and user interface specifications. The NJ-series Machine Automation Controllers are part of the Sysmac Series. You can use them together with EtherCAT slaves, other Sysmac products, and the Sysmac Studio Automation Software to achieve optimum functionality and ease of operation. With a system that is created from Sysmac products, you can connect components and commission the system through unified concepts and usability.

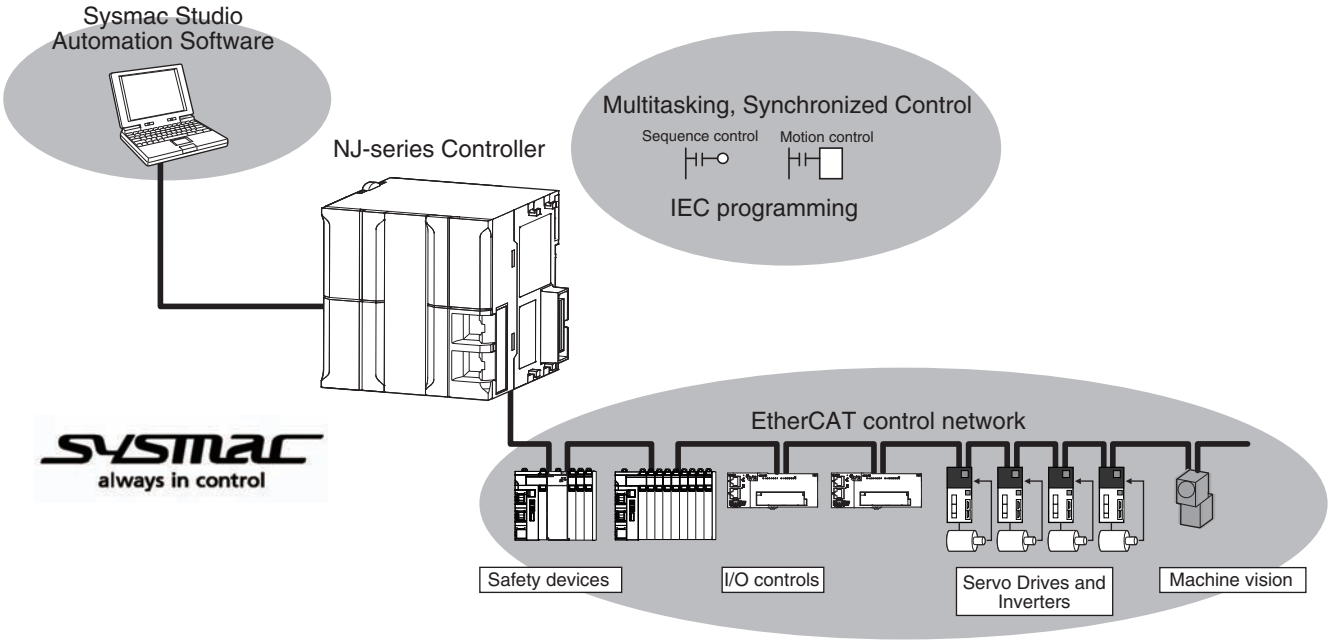

1-1-1 Features

Hardware Features

- **Standard-feature EtherCAT Control Network Support**

  All CPU Units provide an EtherCAT master port for EtherCAT communications. EtherCAT is an advanced industrial network system that achieves faster, more-efficient communications. It is based on Ethernet. Each node achieves a short fixed communications cycle time by transmitting Ethernet frames at high speed. The standard-feature EtherCAT control network allows you to connect all of the devices required for machine control (e.g., I/O systems, Servo Drives, Inverters, and machine vision) to the same network.

- **Achieving a Safety Subsystem on EtherCAT**

  You can use NX-series Safety Control Units to integrate safety controls in a sequence and motion control system as a subsystem on EtherCAT.

● CJ-series Units

In addition to EtherCAT network slaves, you can also mount CJ-series Basic I/O Units and Special Units on the I/O bus.

● Standard-feature EtherNet/IP Communications Port

All CPU Units provide an EtherNet/IP port for EtherNet/IP communications. EtherNet/IP is a multi-vendor industrial network that uses Ethernet. You can use it for networks between Controllers or as a field network. The use of standard Ethernet technology allows you to connect to many different types of general-purpose Ethernet devices.

● Standard-feature USB Port

You can connect the computer that runs the Support Software directly to the CPU Unit.

● Standard-feature SD Memory Card Slot

You can access an SD Memory Card that is mounted in the CPU Unit from the user program.

● Highly Reliable Hardware

The NJ-series Controllers provide the hardware reliability and RAS functions that you expect of a PLC.

Software Features

● Integrated Sequence Control and Motion Control

An NJ-series CPU Unit can perform both sequence control and motion control. You can simultaneously achieve both sequence control and multi-axes synchronized control. Sequence control, motion control, and I/O refreshing are all executed in the same control period. The same control period is also used for the process data communications cycle for EtherCAT. This enables precise sequence and motion control in a fixed period with very little deviation.

● Multitasking

You assign I/O refreshing and programs to tasks and then specify execution conditions and execution order for them to flexibly combine controls that suit the application.

● Programming Languages Based on the IEC 61131-3 International Standard

The NJ-series Controllers support language specifications that are based on IEC 61131-3. To these, OMRON has added our own improvements. Motion control instructions that are based on PLCopen® standards and an instruction set (POUs) that follows IEC rules are provided.

● Programming with Variables to Eliminate Worrying about the Memory Map

You access all data through variables in the same way as for the advanced programming languages that are used on computers. Memory in the CPU Unit is automatically assigned to the variables that you create so that you do not have to remember the physical addresses.

● A Wealth of Security Features

The many security features of the NJ-series Controllers include operation authority settings and restriction of program execution with IDs.

● Complete Controller Monitoring

The CPU Unit monitors events in all parts of the Controller, including mounted Units and EtherCAT slaves. Troubleshooting information for errors is displayed on the Sysmac Studio or on an NS-series PT. Events are also recorded in logs.

● Sysmac Studio Automation Software

The Sysmac Studio provides an integrated development environment that covers not only the Controller, but also covers peripheral devices and devices on EtherCAT. You can use consistent procedures for all devices regardless of the differences in the devices. The Sysmac Studio supports all phases of Controller application, from designing through debugging, simulations, commissioning, and changes during operation.

● A Wealth of Simulation Features

The many simulation features include execution, debugging, and task execution time estimates on a virtual controller.

1-1-2 Introduction to the System Configurations

The NJ Series supports the following system configurations.

● Basic System Configurations

The NJ-series basic configurations include the EtherCAT network configuration, CJ-series Unit configuration, and the Support Software.

EtherCAT Network Configuration

You can use the built-in EtherCAT port to connect to EtherCAT Slave Terminals, to general-purpose slaves for analog and digital I/O, and to Servo Drives and encoder input slaves. An EtherCAT network configuration enables precise sequence and motion control in a fixed cycle with very little deviation.

CJ-series Unit Configuration

In addition to the EtherCAT network, you can mount CJ-series Basic I/O Units and Special Units. CJ-series Units can be mounted both to the CPU Rack where the CPU Unit is mounted and to Expansion Racks.

Support Software

The Support Software is connected to the peripheral USB port on the CPU Unit with a commercially available USB cable. You can also connect it through an Ethernet cable that is connected to the built-in EtherNet/IP port.

Refer to *3-7-2 Connection* for details on the connection configuration of the Support Software.

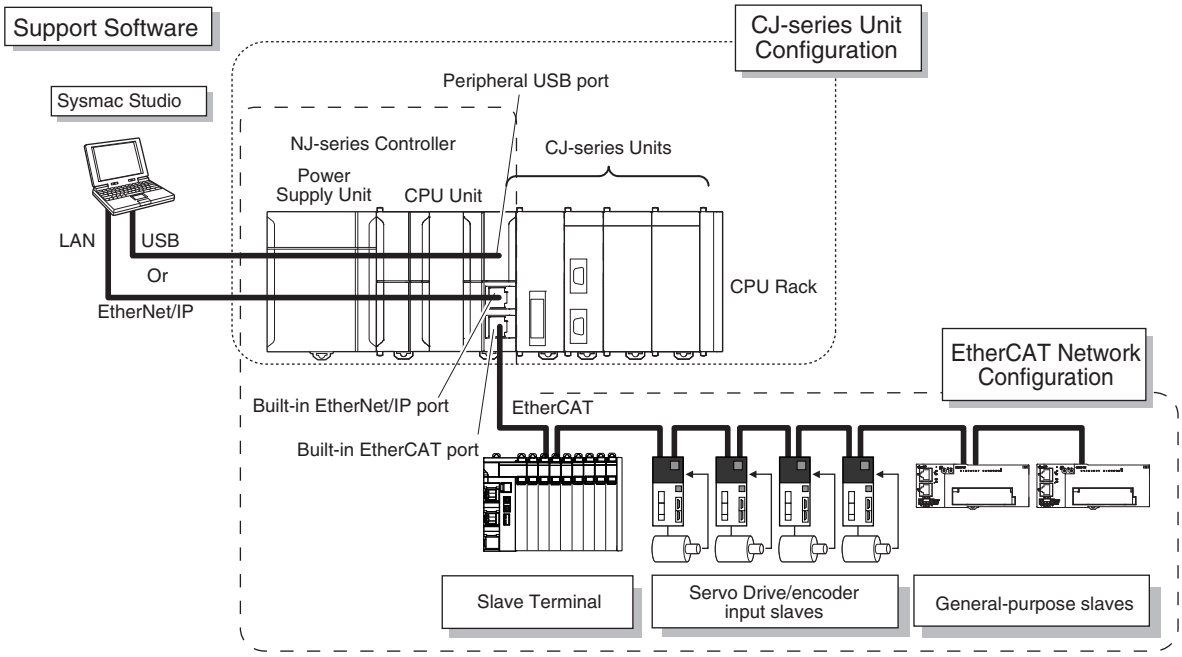

Additional Information

You can connect the Sysmac Studio directly to the Communications Coupler Unit to set up the Slave Terminal. Refer to the *NX-series EtherCAT Coupler Units User's Manual* (Cat. No. W519) for details.

Network Configurations

- Host computers, HMIs, and other NJ-series Controllers are connected to the built-in EtherNet/IP port on the CPU Unit or to a CJ1W-EIP21 EtherNet/IP Unit.
- A DeviceNet network is connected to a DeviceNet Unit. A serial communications network is connected to a Serial Communications Unit.

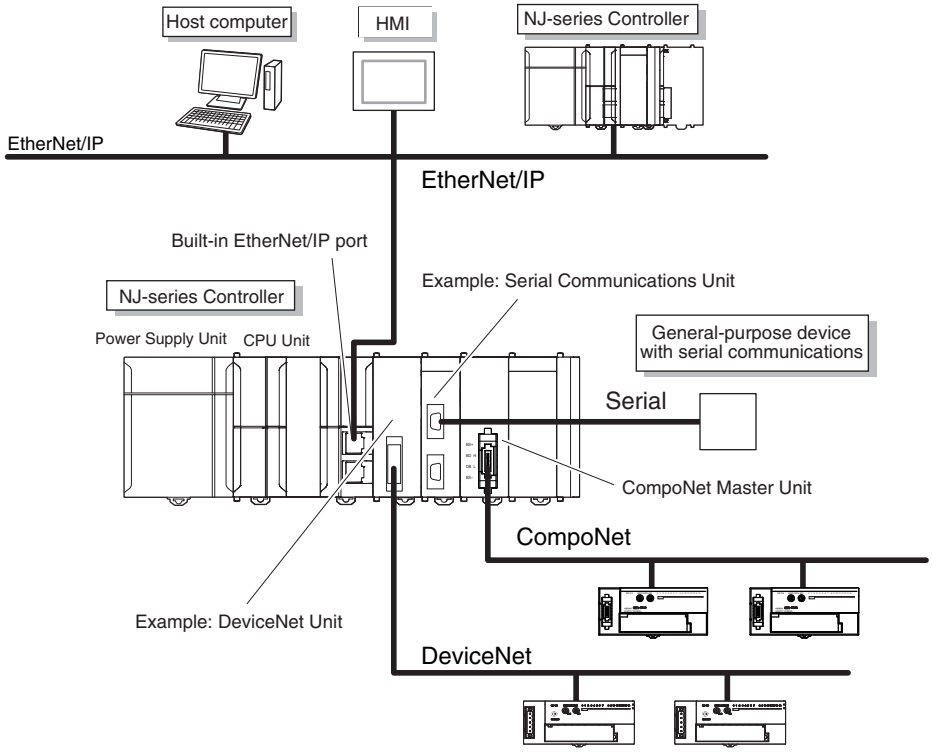

Refer to the *NJ-series CPU Unit Software User's Manual* (Cat. No. W501) for details on the network configuration.

Support Software

You can use the following Support Software to set up, monitor, and debug an NJ-series Controller.

Sysmac Studio

The Sysmac Studio is the main Support Software that you use for an NJ-series Controller. On it, you can set up the Controller configurations, parameters, and programs, and you can debug and simulate operation.

Other Support Software

The following Support Software is also included in the Sysmac Studio Software Package Standard Edition.

Configuration software	Application
Sysmac Studio	The Sysmac Studio is used for sequence control, motion control, and all other operations except those described below.
Network Configurator	The Network Configurator is used for tag data links on EtherNet/IP ports.
CX-Integrator	The CX-Integrator is used for remote I/O communications with a DeviceNet Unit or CompoNet Master Unit.
CX-Protocol	The CX-Protocol is used for protocol macros with Serial Communications Units.
CX-Designer	The CX-Designer is used to create screens for NS-series PTs.

1-2 Specifications

This section gives the main specifications of the NJ-series Controllers.

Item				NJ501-			NJ301-	
				15□□	14□□	13□□	12□□	11□□
Processing time	Instruction execution times	Ladder diagram instructions (LD, AND, OR, and OUT)		1.9 ns or more			3.0 ns or more	
		Math instructions (for long real data)		26 ns or more			42 ns or more	
Programming	Program capacity*1	Size		20 MB			5 MB	
		Quantity	Number of POU definitions	3,000			750	
			Number of POU instances	9,000*			3,000*	
	Memory capacity for variables	Retain attributes*2	Size	2 MB			0.5 MB	
			Number of variables	10,000			5,000*	
		No Retain attributes*3	Size	4 MB			2 MB	
			Number of variables	90,000			22,500	
	Data types	Number of data types		2,000			1,000	
	Memory for CJ-series Units (Can be specified with AT specifications for variables.)	CIO Area		6,144 words (CIO 0 to CIO 6143)				
		Work Area		512 words (W0 to W511)				
		Holding Area		1,536 words (H0 to H1535)				
		DM Area		32,768 words (D0 to D32767)				
		EM Area		32,768 words × 25 banks (E0_00000 to E18_32767) 32,768 words × 4 banks (E0_00000 to E3_32767)				
Unit configuration	Maximum number of connectable Units	Maximum per CPU Rack or Expansion Rack		10				
		Entire controller		40				
	Maximum number of Expansion Racks			3				
	I/O capacity	Maximum number of I/O points on CJ-series Units		2,560				
	Power Supply Unit for CPU Rack and Expansion Racks	Model		NJ-P□3001				
		Power OFF detection time	AC power supply	30 to 45 ms				
			DC power supply	22 to 25 ms				
Motion control	Number of controlled axes	Maximum number of controlled axes*4		64 axes	32 axes	16 axes	15 axes (*)	
		Maximum number of used real axes*5		64 axes	32 axes	16 axes	8 axes	4 axes
		Maximum number of axes for single-axis control		64 axes for single-axis control	32 axes for single-axis control	16 axes for single-axis control	15 axes for single-axis control (*)	
		Maximum number of axes for linear interpolation axis control		4 axes per axes group				
		Number of axes for circular interpolation axis control		2 axes per axes group				
	Maximum number of axes groups			32 axes groups				
	Motion control period			The same control period as that is used for the process data communications cycle for EtherCAT.				
	Cams	Number of cam data points	Maximum points per cam table	65,535 points				
			Maximum points for all cam tables	1,048,560 points			262,140 points	
		Maximum number of cam tables		640 tables			160 tables	
	Position units			Pulse, mm, μm, nm, degree, and inch				
	Override factors			0.00% or 0.01% to 500.00%				
Peripheral USB port	Supported services			Sysmac Studio connection				
	Physical layer			USB 2.0-compliant B-type connector				
	Transmission distance			5 m max.				

Item				NJ501-			NJ301-	
				15□□	14□□	13□□	12□□	11□□
Built-in EtherNet/IP port	Physical layer			10BASE-T/100BASE-TX				
	Media access method			CSMA/CD				
	Modulation			Baseband				
	Topology			Star				
Built-in EtherNet/IP port	Baud rate			100 Mbps (100Base-TX)				
	Transmission media			STP (shielded, twisted-pair) cable of Ethernet category 5, 5e or higher				
	Maximum transmission distance between Ethernet switch and node			100 m				
	Maximum number of cascade connections			There are no restrictions if an Ethernet switch is used.				
Built-in EtherNet/IP port	CIP service: Tag data links (cyclic communications)	Maximum number of connections		32				
		Packet interval*4		Can be set for each connection. 1 to 10,000 ms in 1-ms increments (*)				
		Permissible communications band		3,000 pps*5 (including heartbeat) (*)				
		Maximum number of tag sets		32				
		Tag types		Network variables, CIO, Work, Holding, DM, and EM Areas				
		Number of tags per connection (i.e., per tag set)		8 (7 tags if Controller status is included in the tag set.)				
		Maximum link data size per node (total size for all tags)		19,200 bytes				
		Maximum data size per connection		600 bytes				
		Maximum number of registrable tag sets		32 (1 connection = 1 tag set)				
		Maximum tag set size		600 bytes (Two bytes are used if Controller status is included in the tag set.)				
		Multi-cast packet filter*6		Supported				
	CIP message service: Explicit messages	Class 3 (number of connections)		32 (clients plus server)				
		UCMM (non-connection type)	Maximum number of clients that can communicate at one time	32				
			Maximum number of servers that can communicate at one time	32				
	Number of TCP sockets			30 (*)				
Built-in EtherCAT port	Communications standard			IEC 61158 Type12				
	EtherCAT master specifications			Class B (Feature Pack Motion Control compliant)				
	Physical layer			100BASE-TX				
	Modulation			Baseband				
	Baud rate			100 Mbps (100Base-TX)				
	Duplex mode			Auto				
	Topology			Line, daisy chain, and branching				
	Transmission media			Twisted-pair cable of category 5 or higher (double-shielded straight cable with aluminum tape and braiding)				
	Maximum transmission distance between nodes			100 m				
	Maximum number of slaves			192				
	Maximum process data size			Inputs: 5,736 bytes Outputs: 5,736 bytes However, the maximum number of process data frames is 4.				
	Maximum process data size per slave			Inputs: 1,434 bytes Outputs: 1,434 bytes				
	Communications cycle			500, 1,000, 2,000, or 4,000 μs (*)				
	Sync jitter			1 μs max.				
Internal clock				At ambient temperature of 55°C: −3.5 to +0.5 min error per month At ambient temperature of 25°C: −1.5 to +1.5 min error per month At ambient temperature of 0°C: −3 to +1 min error per month				

*1 Execution objects and variable tables (including variable names)
*2 Does not include Holding, DM, and EM Area memory for CJ-series Units.
*3 Does not include CIO and Work Area memory for CJ-series Units.
*4 This is the total for all axis types.
*5 This is the total number of axes that are set as servo axes or encoder axes and are also set as used axes.
*6 Data will be refreshed at the set interval, regardless of the number of nodes.
*7 “pps” means packets per second, i.e., the number of communications packets that can be sent or received in one second.

*8 As the EtherNet/IP port implements the IGMP client, unnecessary multi-cast packets can be filtered by using an Ethernet switch that supports IGMP Snooping.

Note Items that are marked with asterisks in the table are improvements that were made during version upgrades. Refer to *A-8 Version Information* for information on version upgrades.

1-3 Overall Operating Procedure for the NJ-series Controller

This section gives the overall operating procedure of the NJ-series Controllers and then describes it in more detail.

1-3-1 Overall Procedure

The overall procedure to use an NJ-series Controller is given below.

Step 1. Software Design

Design the overall system configuration, task configuration, programs, and variables.

- Step 1-1 Designing I/O and Processing
- Step 1-2 Designing Tasks
- Step 1-3 Designing Programs

Step 2. Software Setups and Programming

Create the system configurations that you designed in step 1 on the Support Software and assign the variables. Create the tasks and programs, and debug them, e.g., with simulations.

- Step 2-1 Slave and Unit Configurations
- Step 2-2 Controller Setup
- Step 2-3 Programming
- Step 2-4 Offline Debugging

Step 3. Mounting and Setting Hardware

Mount the Units and make the required hardware settings.

Step 4. Wiring

Connect the network cables and wire the I/O.

Step 5. Confirming Operation and Starting Actual System Operation

Connect the Support Software to the physical system and download the project. Check operation on the physical system and then start actual system operation.

1-3-2 Procedure Details

Step 1. Software Design

Step	Description	Reference
Step 1-1 Designing I/O and Processing	• External I/O devices and unit configuration • Refresh periods for external devices • Program contents	*Section 3 Configuration Units* (page 3-1)
Step 1-2 Designing Tasks	• Task configuration • Relationship between tasks and programs • Task periods • Slave and Unit refresh times • Exclusive control methods for variables between tasks	*NJ-series CPU Unit Software User's Manual* (Cat. No. W501)
Step 1-3 Designing Programs		
POU (Program Organization Unit) Design	• Programs • Functions and function blocks • Determining the algorithm languages	*NJ-series CPU Unit Software User's Manual* (Cat. No. W501)
Variable Design	• Defining variables that you can use in more than one POU and variables that you use in only specific POUs • Defining the variables names for the device variables that you use to access slaves and Units • Defining the attributes of variables, such as the Name and Retain attributes • Designing the data types of variables	*NJ-series CPU Unit Software User's Manual* (Cat. No. W501)

Step 2. Software Setups and Programming

Step	Description	Sysmac Studio Operations	Reference
Project Creation	1. Create a project in the Sysmac Studio. 2. Insert a Controller.	**New Project** Button ***Insert*** – ***Controller***	*Sysmac Studio Version 1 Operation Manual* (Cat. No. W504)

The following *Controller Configurations and Setup* and the *Programming and Task Settings* can be performed in either order.

Step 2-1 Slave and Unit Configurations			
1) Creating the Slave and Unit Configurations	1. Creating the slave configuration and Unit configuration either offline or online. (For online configuration, make the online connection that is described in step 5.) 2. Setting up any Slave Terminals that are used.	EtherCAT Slave Setting Editor Unit Editor	*NJ-series CPU Unit Software User's Manual* (Cat. No. W501) *NX-series EtherCAT Coupler Unit User's Manual* (Cat. No. W519)
2) Assigning Device Variables to I/O Ports	Registering device variables in variable tables (Variable names are user defined or automatically created.)	I/O Map	*NJ-series CPU Unit Software User's Manual* (Cat. No. W501)

(The following step is for motion control.)

3) Creating the Axes and Assigning Them to the Servo Drive/Encoder Input Slaves	Creating the axes and setting them as real axes or virtual axes. Creating axes groups to perform interpolated axes control.	**Configurations and Setup** – **Motion Control Setup**	*NJ-series CPU Unit Software User's Manual* (Cat. No. W501)
Step 2-2 Controller Setup	Setting the following parameters from the Sysmac Studio		*NJ-series CPU Unit Software User's Manual* (Cat. No. W501)
	Setting the initial values for the PLC Function Module	**Configurations and Setup** – **Controller Setup** – **Operation Settings**	
	Initial settings for Special Units	**Configurations and Setup** – **CPU/Expansion Racks**	
	(To use motion control) Setting the initial settings for the Motion Control Function Module	**Configurations and Setup** – **Motion Control Setup**	
	Setting the initial values for the EtherCAT Function Module	**Configurations and Setup** – **EtherCAT**	
	Setting the initial values for the EtherNet/IP Function Module	**Configurations and Setup** – **Controller Setup** – **Built-in EtherNet/IP Port Settings**	

Step 2-3 Programming			
1) Registering Variables	• Registering the variables used by more than one POU in the global variable table with Sysmac Studio • Registering the local variable table for each program • Registering the local variable table for each function block and function	Global Variable Table Editor Local Variable Table Editor	*Sysmac Studio Version 1 Operation Manual* (Cat. No. W504) *NJ-series CPU Unit Software User's Manual* (Cat. No. W501)
2) Writing Algorithms for POUs	Writing the algorithms for the POUs (programs, function blocks, and functions) in the required languages	Programming Editor	*NJ-series CPU Unit Software User's Manual* (Cat. No. W501) *NJ-series Instructions Reference Manual* (Cat. No. W502) and *NJ-series Motion Control Instructions Reference Manual* (Cat. No. W508)
3) Setting the Tasks	Making task settings	**Configurations and Setup** – **Task Settings**	*NJ-series CPU Unit Software User's Manual* (Cat. No. W501)
Step 2-4 Offline Debugging	Checking the algorithms and task execution times on the Simulator (virtual controller)		*NJ-series CPU Unit Software User's Manual* (Cat. No. W501)

Step 3. Mounting and Setting Hardware

Step	Description	Reference
1. Mounting	• Connecting adjacent Units • Mounting to DIN Track	*4-3 Mounting Units* (page 4-9)
2. Setting Hardware	• Setting the node addresses of the EtherCAT slaves • Setting unit numbers on the rotary switches on the front of the Special Units	Operation manuals for the EtherCAT slaves and Special Units

Step 4. Wiring

Step	Description	Reference
1. Connecting Ethernet Cable	• Connecting the built-in EtherCAT port • Connecting the built-in EtherNet/IP port	*4-4 Wiring* (page 4-26)
2. Wiring I/O	• Wiring I/O to EtherCAT slaves • Wiring Basic I/O Units and Special Units	Operation manuals for EtherCAT Slave Units and *4-4 Wiring* (page 4-26)
	• Checking wiring	*Sysmac Studio Version 1 Operation Manual* (Cat. No. W504)
3. Connecting the Computer That Runs the Sysmac Studio	• Connecting USB Cable • Connecting the built-in EtherNet/IP port	*Sysmac Studio Version 1 Operation Manual* (Cat. No. W504)

Step 5. Checking Operation and Starting Operation on the Actual System

Step	Description	Sysmac Studio Operations	Reference
1. Online Connection to Sysmac Studio and Project Download	Turn ON the power supply to the Controller and place the Sysmac Studio online. Then, download the project.* (Perform this step before you create the slave configuration or Unit configuration from the mounted Units in step 2-1.)	***Controller** – **Communications Setup*** ***Controller** – **Synchronization***	*NJ-series CPU Unit Software User's Manual* (Cat. No. W501)
2. Operation Check on Controller	1. Check the wiring by using forced refreshing of real I/O from the I/O Map or Watch Tab Page. 2. For motion control, use the MC Test Run operations in PROGRAM mode to check the wiring. Then check the motor rotation directions for jogging, travel distances for relative positioning (e.g., for electronic gear settings), and homing operation. 3. Change the Controller to RUN mode and check the operation of the user program.		*NJ-series CPU Unit Software User's Manual* (Cat. No. W501)
3. Actual Controller Operation	Start actual operation.		*Section 7 Checking Operation and Actual Operation* in *NJ-series CPU Unit Software User's Manual* (Cat. No. W501)

* Use the Synchronize Menu of the Sysmac Studio to download the project.

2

System Configuration

This section describes the basic system configuration and devices used for NJ-series Controllers.

2-1 Basic System Configuration 2-2
2-1-1 EtherCAT Network Configuration 2-4
2-1-2 CJ-series Unit Configuration 2-5
2-2 Connecting to the Sysmac Studio 2-18
2-3 Network Configuration 2-19

2-1 Basic System Configuration

System Configuration

An NJ-series Controller supports the following two types of configurations.

(1) Basic Configurations

The basic configurations include the CPU Unit and the Configuration Units that are controlled directly by the CPU Unit. There are two basic configurations.

- EtherCAT network configuration
- CJ-series Unit configuration

(2) Other Network Configurations

These are the configurations of the systems that are connected to the CPU Unit's built-in EtherNet/IP port and Communications Units.

● EtherCAT Network Configuration

With an NJ-series CPU Unit, you can use an EtherCAT network as a basic system.
With the EtherCAT network system of the NJ-series CPU Unit, the period for sequence processing and motion processing in the CPU Unit is the same as the EtherCAT communications period. This enables high-precision sequence control and motion control with a constant period and little fluctuation.
For information on EtherCAT, refer to the *NJ-series CPU Unit Built-in EtherCAT Port User's Manual* (Cat. No. W505).

● CJ-series Unit Configuration

CPU Rack

The CPU Rack consists of the following items.

- NJ-series CPU Unit
- NJ-series Power Supply Unit
- CJ-series Configuration Units*
  CJ-series Basic I/O Units, Special I/O Units, and CPU Bus Units
- I/O Control Unit
  An I/O Control Unit is required to connect an Expansion Rack.
- End Cover

* Some CJ-series Configuration Units cannot be used with an NJ-series CPU Unit.
Refer to *CJ-series Configuration Units* on page 2-11 for information on the models you can use with an NJ-series CPU Unit.

Expansion Racks

You can connect an Expansion Rack to an NJ-series CPU Rack or to another Expansion Rack. A CPU Unit cannot be mounted to an Expansion Rack. The rest of the configuration is the same as for an NJ-series CPU Rack.

CJ-series Unit Configuration

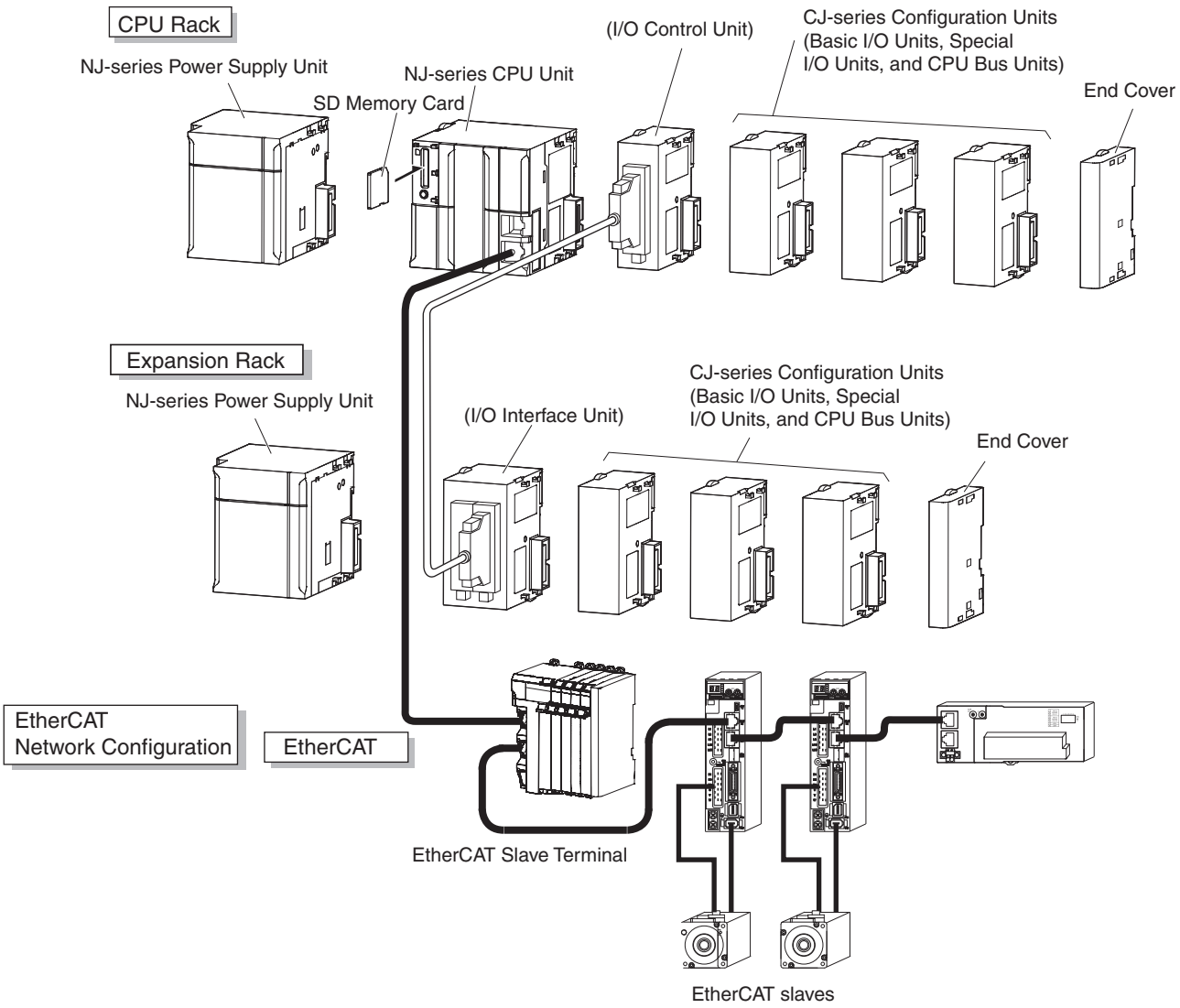

2-1-1 EtherCAT Network Configuration

The EtherCAT network configuration consists of an NJ-series CPU Unit, an NJ-series Power Supply Unit, a CJ-series End Cover, and the EtherCAT slaves.
You use the built-in EtherCAT master port on the NJ-series CPU Unit to connect EtherCAT slaves.
For information on the system configuration of an EtherCAT network, refer to the *NJ-series CPU Unit Built-in EtherCAT Port User's Manual* (Cat. No. W505).

EtherCAT Network Configuration

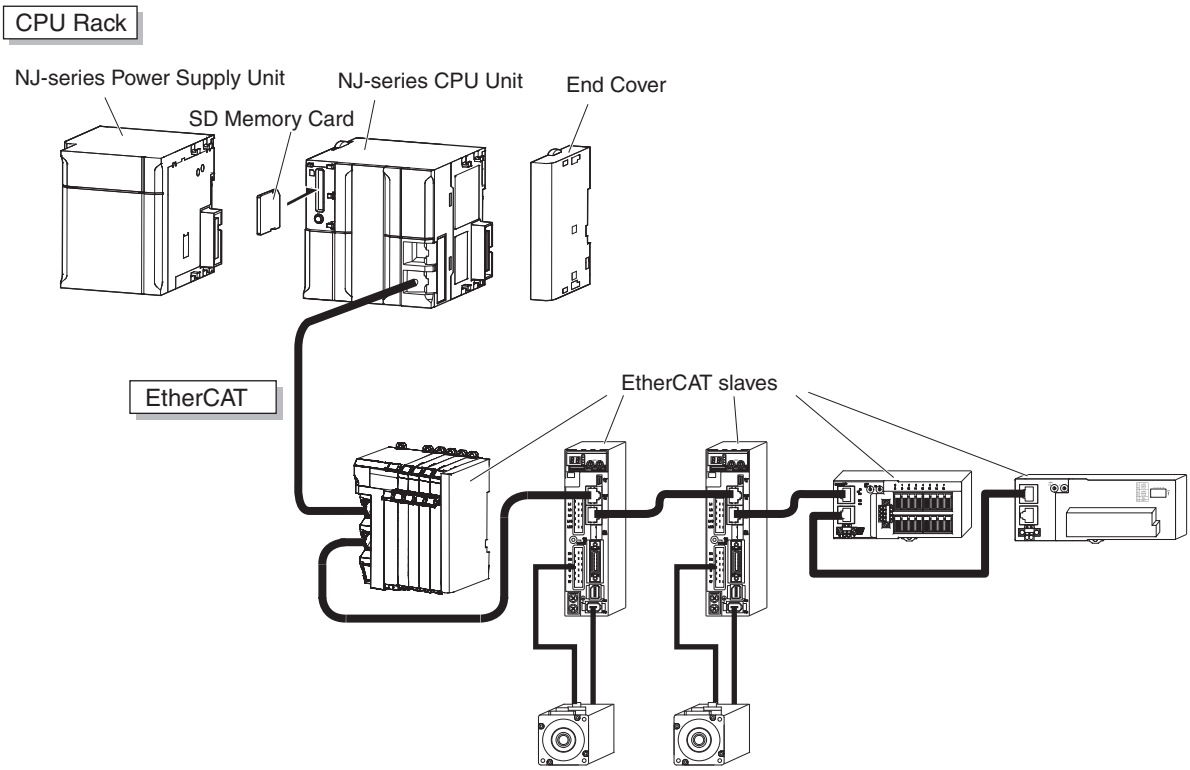

2-1-2 CJ-series Unit Configuration

The CJ-series Unit configuration consists of the CJ-series Units that are connected. It includes the CJ-series Units on the CPU Rack and Expansion Racks.

CPU Rack

The CPU Rack consists of an NJ-series CPU Unit, an NJ-series Power Supply Unit, CJ-series Configuration Units, and a CJ-series End Cover. Up to 10 Configuration Units can be connected.

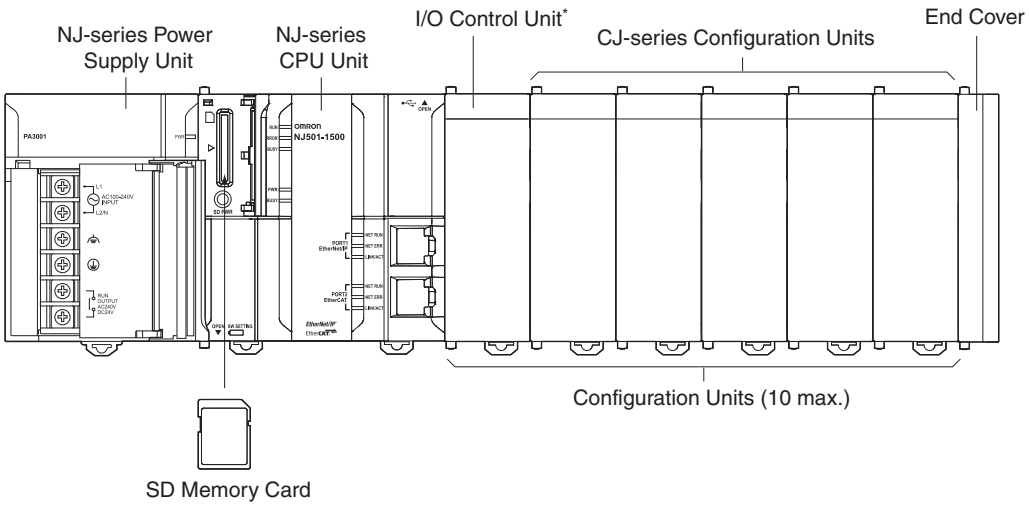

* The I/O Control Unit is required only to connect an Expansion Rack. It must be connected immediately to the right of the CPU Unit.

Even though the NJ-series Controllers do not have Backplanes, the term “slot” is still used to refer to the location of Units. Slot numbers are assigned in order to Units from left to right on the CPU Rack (slot 0, slot 1, slot 2, etc.).

Name	Configuration	Remarks
NJ-series Units	NJ-series CPU Units (One End Cover is provided with each Unit.)	One required for every CPU Rack.
	NJ-series Power Supply Unit	
	SD Memory Card	Install as required.
CJ-series Units	I/O Control Unit	Required to connect an Expansion Rack. Must be connected immediately to the right of the CPU Unit.
	End Cover	Must be connected to the right end of the CPU Rack. One End Cover is provided with the CPU Unit. (A Controller error in the major fault level will occur if the End Cover is not connected to the right end.)
	CJ-series Basic I/O Units	A total of up to 10 Units can be connected to the CPU Rack and to each of the Expansion Racks. (A Controller error in the major fault level will occur if 11 or more Units are connected.)
	CJ-series Special I/O Units	
	CJ-series CPU Bus Units	

● Units

NJ-series CPU Units

Model	I/O capacity/Maximum number of Configuration Units (Maximum number of Expansion Racks)	Program capacity	Memory capacity for variables	Number of motion axes	Database connection service	Current consumption		Weight
						5 VDC	24 VDC	
NJ501-1500	2,560 points/40 Units (3 Expansion Racks)	20 MB	2 MB: Retained during power interruptions. 4 MB: Not retained during power interruptions.	64	Not supported.	1.90 A	---	550 g
NJ501-1400				32				
NJ501-1300				16				
NJ501-1520				64	Supported.			
NJ501-1420				32				
NJ501-1320				16				
NJ301-1200		5 MB	0.5 MB: Retained during power interruptions. 2 MB: Not retained during power interruptions.	8	Not supported.			
NJ301-1100				4				

NJ-series Power Supply Units

Model	Power supply voltage	Output current		Output capacity	RUN output	CPU Rack	Expansion Racks	Weight
		5 VDC	24 VDC					
NJ-PA3001	100 to 240 VAC	6.0 A	1.0 A	30 W	Yes	Yes	Yes	470 g max.
NJ-PD3001	24 VDC	6.0 A	1.0 A	30 W	Yes	Yes	Yes	490 g max.

Note A CJ-series Power Supply Unit cannot be used to supply power to an NJ-system CPU Rack or Expansion Rack.
If you connect a CJ-series Power Supply Unit to a CPU Rack, an Incorrect Power Supply Unit Connected error will occur, and the CPU Unit will not operate. The RUN indicator will flash at a 3-s interval and the ERROR indicator will light.
If you connect the Power Supply Unit to an Expansion Rack, operation is performed without error detection. Normal operation, however, may be unstable due to insufficient supplied power. Also, an Internal NJ-series Bus Check Error (i.e., a Controller error in the major fault level) may occur when the power is interrupted.

Precautions for Safe Use

- Do not use the Power Supply Units in the system beyond the rated supply capacity ranges. Doing so may result in operation stopping, incorrect operation, or failure to correctly back up required data at power interruptions.
- Use only NJ-series Power Supply Units on NJ-series CPU Racks and Expansion Racks. Operation is not possible if you use a CJ-series Power Supply Unit with an NJ-series CPU Unit or an NJ-series Power Supply Unit with a CJ-series CPU Unit.

SD Memory Card

Model	Card type	Capacity	Format	Number of overwrites
HMC-SD291	SD Card	2 GB	FAT16	100,000
HMC-SD491	SDHC Card	4 GB	FAT32	100,000

I/O Control Unit

Model	Specifications	Current consumption		Weight
		5 VDC	24 VDC	
CJ1W-IC101	An I/O Control Unit is required to connect an NJ-series Expansion Rack to an NJ-series CPU Rack. The I/O Control Unit must be connected immediately to the right of the CPU Unit. Connect to the I/O Interface Unit (CJ1W-II101) on the Expansion Rack with a CS/CJ-series I/O Connecting Cable.	0.02 A	---	70 g max.

End Cover

Model	Specifications	Current consumption	Weight
CJ1W-TER01	The End Cover must be connected to the right end of the NJ-series CPU Rack. (A Controller error in the major fault level will occur if the End Cover is not connected to the right end of the Rack.) One End Cover is provided with the CPU Unit and with an I/O Interface Unit.	Included with the CPU Unit or Expansion Unit.	

Others

Name	Model	Specifications
DIN Track	PFP-50N	Track length: 50 cm, height: 7.3 mm
	PFP-100N	Track length: 1 m, height: 7.3 mm
	PFP-100N2	Track length: 1 m, height: 16 mm
	PFP-M	Stopper to prevent Units from moving on the track. Two each are provided with the CPU Unit and with an I/O Interface Unit.
Connecting cable for peripheral USB port (to connect the Sysmac Studio)	Commercially available USB cable	USB 2.0 (or 1.1) cable (A connector - B connector), 5.0 m max.
Battery Set	CJ1W-BAT01	For CJ2 CPU Unit
Sysmac Studio Standard Edition	SYSMAC-SE□□□	The Sysmac Studio is a Support Software package that provides an integrated development environment to design, program, debug, and maintain SYSMAC NJ-series Controllers. The following Support Software is included. • Sysmac Studio • Network Configurator • CX-Integrator • CX-Protocol • CX-Designer

Recommended Communications Cables for EtherCAT and EtherNet/IP

For EtherCAT, use a shielded twisted-pair cable (double shielding with aluminum tape and braiding) of Ethernet category 5 (100Base-TX) or higher, and use straight wiring. For EtherNet/IP, use an STP (shielded twisted-pair) cable of Ethernet category 5 or higher. You can use either a straight or cross cable.

Product			Manufacturer	Cable length*1	Model
Products for EtherCAT	Size and number of pairs: AWG22 × 2P	Cables with Connectors on Both Ends (RJ45/RJ145)	OMRON Corporation	0.3	XS5W-T421-AMD-K
				0.5	XS5W-T421-BMD-K
				1	XS5W-T421-CMD-K
		Cables with Connectors on Both Ends (RJ45/RJ145)	OMRON Corporation	2	XS5W-T421-DMC-K
				5	XS5W-T421-GMC-K
				10	XS5W-T421-JMC-K
Products for EtherCAT or EtherNet/IP	Size and number of pairs: AWG24 × 4P	Cables	Tonichi Kyosan Cable, Ltd.		NETSTAR-C5E SAB 0.5 × 4P
			Kuramo Electric Co.		KETH-SB
			SWCC Showa Cable Systems Co.		FAE-5004
		RJ45 Connectors	Panduit Corporation		MPS588
	Size and number of pairs: AWG22 × 2P	Cables	Kuramo Electric Co.		KETH-PSB-OMR*2
		RJ45 Assembly Connectors	OMRON Corporation		XS6G-T421-1*2
Products for EtherNet/IP	Size and number of pairs: 0.5 mm × 4P	Cable	Fujikura		F-LINK-E 0.5mm × 4P
		RJ45 Connector	Panduit Corporation		MPS588

*1 Cables are available in the following lengths: 0.3, 0.5, 1, 2, 3, 5, 10, and 15 m. Refer to the *XS5/XS6 Industrial Ethernet Connectors Catalog* (Cat. No. G019)

*2 We recommend that you use combinations of the above Cables and Connectors.

Note When making cables, connect the shield to the connectors at both ends for EtherCAT, but connect the shield to the connector at only one end for EtherNet/IP.

Expansion Racks

CJ-series Expansion Racks can be connected to the CPU Rack to expand the number of Units in the System beyond the CPU Rack. Up to 10 I/O Units can be mounted to each Expansion Rack and a total of 3 Expansion Racks can be connected.

Mount an I/O Control Unit immediately to the right of the CPU Unit, and mount the I/O Interface Unit immediately to the right of the Power Supply Unit on the Expansion Rack. Mounting them in other locations may cause malfunctions.

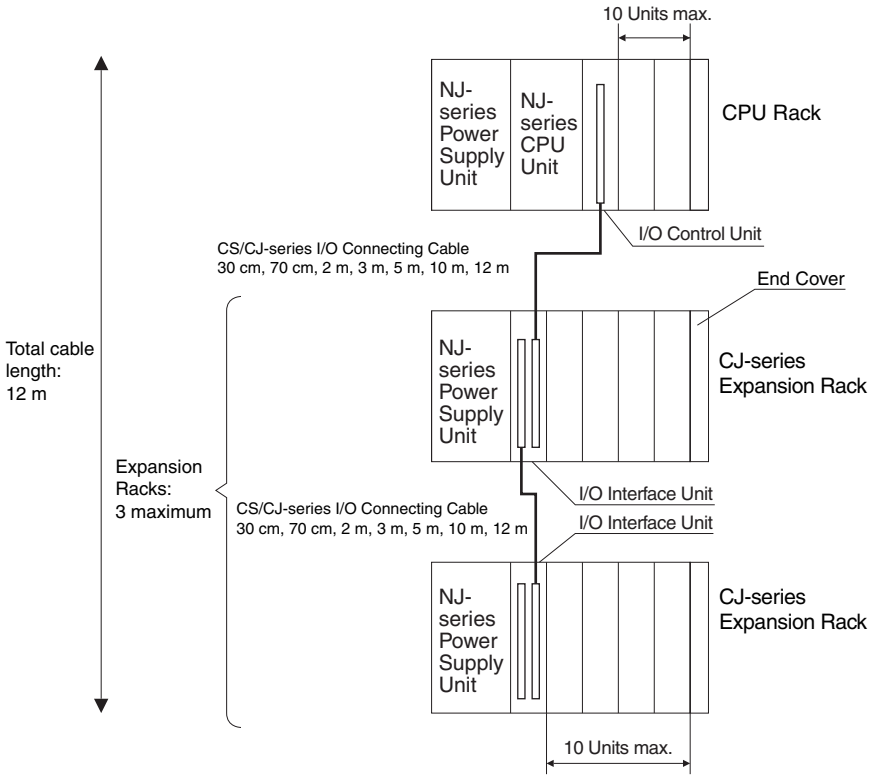

CS/CJ-series I/O Connecting Cables

Cable	Length
CS1W-CN313	0.3 m
CS1W-CN713	0.7 m
CS1W-CN223	2 m
CS1W-CN323	3 m
CS1W-CN523	5 m
CS1W-CN133	10 m
CS1W-CN133B2	12 m

Use an NJ-series Power Supply Unit as the power supply for an Expansion Rack in an NJ-series System.
A CJ-series Power Supply Unit cannot be used to supply power on an NJ-system Expansion Rack.

● Maximum Number of Expansion Racks

Expansion pattern	Maximum number of Racks	Remarks
NJ-series CPU Rack plus CJ-series Expansion Racks	3 Racks	The total length of I/O Connecting Cable between the CPU Rack and an Expansion Rack, and between all Expansion Racks, must be no more than 12 m.

● Units

Units for CJ-series Expansion Racks

Rack	Configuration	Remarks
NJ-series Expansion Racks	NJ-series Power Supply Unit	One required for each Expansion Rack.*
	I/O Interface Unit (one End Cover included.)	
	CJ-series Basic I/O Units	A total of up to 10 Units can be connected to the CPU Rack and to each of the Expansion Racks. (A Controller error in the major fault level will occur if 11 or more Units are connected.)
	CJ-series Special I/O Units	
	CJ-series CPU Bus Units	
	End Cover	Must be connected to the right end of the Expansion Rack. (One End Cover is provided with the I/O Interface Unit. A Controller error in the major fault level will occur if the End Cover is not connected to the right end.)
	CS/CJ-series I/O Connecting Cable	Required to connect the I/O Interface Unit to the I/O Control Unit or previous I/O Interface Unit.

* A CJ-series I/O Control Unit is required on the NJ-series CPU Rack.

NJ-series Power Supply Units

Model	Power supply voltage	Output current		Output capacity	RUN output	CPU Rack	Expansion Racks	Weight
		5 VDC	24 VDC					
NJ-PA3001	100 to 240 VAC	6.0 A	1.0 A	30 W	Yes	Yes	Yes	470 g max.
NJ-PD3001	24 VDC	6.0 A	1.0 A	30 W	Yes	Yes	Yes	490 g max.

Note Use an NJ-series Power Supply Unit as the power supply for an NJ-series Expansion Rack. A CJ-series Power Supply Unit cannot be used for an NJ-series Expansion Rack.

I/O Interface Unit

Model	Specifications	Current consumption		Weight
		5 VDC	24 VDC	
CJ1W-II101	One Interface Unit is required for each CJ-series Expansion Rack. One End Cover is provided with each Unit.	0.13 A	---	130 g max.*

* Includes the weight of the End Cover.

End Cover

Model	Specifications	Current consumption		Weight
		5 VDC	24 VDC	
CJ1W-TER01	The End Cover must be connected to the right end of the CJ-series Expansion Rack. An End Cover Missing error (a Controller error in the major fault level) will occur if the End Cover is not connected to the right end of the Rack. One End Cover is provided with the CPU Unit and with an I/O Interface Unit.	Included with the CPU Unit or Expansion Unit.		

CS/CJ-series I/O Connecting Cables

Model	Specifications	Cable length
CS1W-CN313	An I/O Connecting Cable connects an I/O Control Unit (CJ1W-IC101) to an I/O Interface Unit (CJ1W-II101), or connects an I/O Interface Unit to another I/O Interface Unit.	0.3 m
CS1W-CN713		0.7 m
CS1W-CN223		2 m
CS1W-CN323		3 m
CS1W-CN523		5 m
CS1W-CN133		10 m
CS1W-CN133B2		12 m

CJ-series Configuration Units

● Maximum Number of Units

A maximum of 10 Units can be connected to the CPU Rack for an NJ-series CPU Unit or to an Expansion Rack. There are no restrictions in the number of each model of Unit based on location.

Note If you connect more than the maximum number of Units to a CPU Rack or Expansion Rack, an Incorrect Unit/Expansion Rack Connection error (a major fault level Controller error) will occur, and the CPU Unit will not operate.

Models of Configuration Units

The Configuration Units with which the NJ-series CPU Unit can exchange data are classified into three groups. The number of Units that can be mounted depends on the type of Unit.

Units	Description	Unit identification method	Number of mountable Units
Basic I/O Units	Basic I/O Units are used for discrete inputs and outputs.	Identified by the CPU Unit according to mounting position.	Up to 40 Basic I/O Units can be mounted.
Special I/O Units	Special I/O Units are more advanced than Basic I/O Units. They support functions other than discrete inputs and outputs. Examples: Analog I/O Units and High-speed Counter Units Special I/O Units have a smaller area for exchanging data with the CPU Unit than CPU Bus Units (including Network Communications Units).	Identified by the CPU Unit using unit numbers 0 to 95 set with the rotary switches on the front panel of the Unit.	Up to 40 Special I/O Units can be mounted. (Depending on the model, 1 to 4 unit numbers are used for one Unit.)
CPU Bus Units	CPU Bus Units are advanced Units that exchange data with the CPU Unit via the CPU bus. Examples: Network Communications Units and Serial Communications Units CPU Bus Units have a larger area for exchanging data with the CPU Unit than Special I/O Units.	Identified by the CPU Unit using unit number 0 to F set with the rotary switch on the front panel of the Unit.	Up to 16 CPU Bus Units can be mounted.

● CJ-series Configuration Units

CJ-series Basic I/O Units

Input Units

Name	Specifications	Model	Number of bits allocated	Response time*1		Current consumption (A)		Weight
				ON	OFF	5 VDC	24 VDC	
DC Input Units	Terminal block 12 to 24 VDC, 8 inputs	CJ1W-ID201	8	20 μs max.	400 μs max.	0.08	---	110 g max.
	Terminal block 24 VDC, 16 inputs	CJ1W-ID211	16	20 μs max.	400 μs max.	0.08	---	110 g max.
		CJ1W-ID212	16	15 μs max.	90 μs max.	0.13	---	110 g max.
	Fujitsu connector 24 VDC, 32 inputs	CJ1W-ID231*2	32	20 μs max.	400 μs max.	0.09	---	70 g max.
	MIL connector 24 VDC, 32 inputs	CJ1W-ID232*2	32	20 μs max.	400 μs max.	0.09	---	70 g max.
		CJ1W-ID233*2	32	15 μs max.	90 μs max.	0.20	---	70 g max.
	Fujitsu connector 24 VDC, 64 inputs	CJ1W-ID261*2	64	120 μs max.	400 μs max.	0.09	---	110 g max.
	MIL connector 24 VDC, 64 inputs	CJ1W-ID262*2	64	120 μs max.	400 μs max.	0.09	---	110 g max.
AC Input Units	Terminal block 200 to 240 VAC, 8 inputs	CJ1W-IA201	8	10 μs max.	40 μs max.	0.08	---	130 g max.
	Terminal block 100 to 120 VAC, 16 inputs	CJ1W-IA111	16	10 μs max.	40 μs max.	0.09	---	130 g max.
Interrupt Input Unit	Terminal block 24 VDC, 16 inputs	CJ1W-INT01*3, *4	16	0.05 ms max.	0.5 ms max.	0.08	---	110 g max.
Quick-response Input Unit	Terminal block 24 VDC, 16 inputs	CJ1W-IDP01	16	0.05 ms max.	0.5 ms max.	0.08	---	110 g max.
B7A Interface Units	64 inputs	CJ1W-B7A14	64	---	---	0.07	---	80 g max.

*1 This is the input response time when no filter (i.e., 0 ms) is set. There is no filter setting for the CJ1W-INT01/IDP01. (The time is always 0 ms.)

*2 The cable-side connector is not provided with Units equipped with cables. Purchase the connector separately (Refer to *4-4-4 Wiring CJ-series Basic I/O Units with Connectors*.), or use an OMRON Connector-Terminal Block Conversion Unit or I/O Relay Terminal (Refer to *4-4-5 Connecting to Connector-Terminal Block Conversion Units or I/O Relay Terminals*.).

*3 An Interrupt Input Unit can be connected only in a CPU Rack. These Units must be mounted to slots 0 to 4 on the CPU Rack. An Incorrect Unit/Expansion Rack Connection error (major fault level Controller error) will occur if an Interrupt Input Unit is connected in other slots on the CPU Rack or to any slots on an Expansion Rack. Up to two Interrupt Input Units can be connected.

*4 Interrupt Input Units can be used as normal Basic I/O Units. They cannot be used to start I/O interrupt tasks.

Output Units

Name		Specifications	Model	Number of bits allocated	Current consumption (A)		Weight
					5 VDC	24 VDC	
Relay Output Units		Terminal block, 250 VAC/24 VDC, 2 A; 8 points, independent contacts	CJ1W-OC201	8	0.09	0.048 (0.006 × Number of ON outputs)	140 g max.
		Terminal block, 250 VAC/24 VDC, 2 A; 16 points	CJ1W-OC211	16	0.11	0.096 (0.006 × Number of ON outputs)	170 g max.
Triac Output Unit		Terminal block, 250 VAC, 0.6 A; 8 points	CJ1W-OA201	8	0.22	---	150 g max.
Transistor Output Units	Sinking outputs	Terminal block, 12 to 24 VDC, 2 A; 8 outputs	CJ1W-OD201	8	0.09	---	110 g max.
		Terminal block, 12 to 24 VDC, 0.5 A; 8 outputs	CJ1W-OD203	8	0.10	---	110 g max.
		Terminal block, 12 to 24 VDC, 0.5 A; 16 outputs	CJ1W-OD211*1	16	0.10	---	110 g max.
		Terminal block, 24 VDC, 0.5 A; 16 outputs	CJ1W-OD213*1	16	0.15	---	110 g max.
		Fujitsu connector, 12 to 24 VDC, 0.5 A; 32 outputs	CJ1W-OD231*2	32	0.14	---	70 g max.
		MIL connector, 12 to 24 VDC, 0.5 A; 32 outputs	CJ1W-OD233*1*2	32	0.14	---	70 g max.
		MIL connector, 24 VDC, 0.5 A; 32 outputs	CJ1W-OD234*1*2	32	0.22	---	70 g max.
		Fujitsu connector, 12 to 24 VDC, 0.3 A; 64 outputs	CJ1W-OD261*2	64	0.17	---	110 g max.
		MIL connector, 12 to 24 VDC, 0.3 A; 64 outputs	CJ1W-OD263*2	64	0.17	---	110 g max.
	Sourcing outputs	Terminal block, 24 VDC, 2 A; 8 outputs, load short-circuit protection and disconnected line detection	CJ1W-OD202	8	0.11	---	120 g max.
		Terminal block, 24 VDC, 0.5 A; 8 outputs, load short-circuit protection	CJ1W-OD204	8	0.10	---	120 g max.
		Terminal block, 24 VDC, 0.5 A; 16 outputs, load short-circuit protection	CJ1W-OD212	16	0.10	---	120 g max.
		MIL connector, 24 VDC, 0.5 A; 32 outputs, load short-circuit protection	CJ1W-OD232*2	32	0.15	---	80 g max.
		MIL connector, 12 to 24 VDC, 0.3 A; 64 outputs	CJ1W-OD262*2	64	0.17	---	110 g max.
B7A Interface Units		64 outputs	CJ1W-B7A04	64	0.07	---	80 g max.

*1 The ON/OFF response time for the CJ1W-OD213/CJ1W-OD234 is shorter than for the CJ1W-OD211/CJ1W-OD233, as shown below.

- ON response time: 0.1 ms improved to 0.015 ms
- OFF response time: 0.8 ms improved to 0.08 ms

*2 The cable-side connector is not provided with Units equipped with cables. Purchase the connector separately (Refer to *4-4-4 Wiring CJ-series Basic I/O Units with Connectors*.), or use an OMRON Connector-Terminal Block Conversion Unit or I/O Relay Terminal (Refer to *4-4-5 Connecting to Connector-Terminal Block Conversion Units or I/O Relay Terminals*.).

Mixed I/O Units

Name		Specifications	Model	Number of bits allocated	Current consumption (A)		Weight
					5 VDC	24 VDC	
24-VDC Input/ Transistor Output Units	Sinking	Fujitsu connector Inputs: 24 VDC, 16 inputs Outputs: 12 to 24 VDC, 0.5 A; 16 outputs	CJ1W-MD231*	32	0.13	---	90 g max.
		Fujitsu connector Inputs: 24 VDC, 32 inputs Outputs: 12 to 24 VDC, 0.3 A; 32 outputs	CJ1W-MD261*	64	0.14	---	110 g max.
		MIL connector Inputs: 24 VDC, 16 inputs Outputs: 12 to 24 VDC, 0.5 A; 16 outputs	CJ1W-MD233*	32	0.13	---	90 g max.
		MIL connector Inputs: 24 VDC, 32 inputs Outputs: 12 to 24 VDC, 0.3 A; 32 outputs	CJ1W-MD263*	64	0.14	---	110 g max.
	Sourcing	MIL connector Inputs: 24 VDC, 16 inputs Outputs: 24 VDC, 0.5 A; 16 outputs Load-short circuit protection	CJ1W-MD232*	32	0.13	---	80 g max.
TTL I/O Units		MIL connector Inputs: TTL (5 VDC), 32 inputs Outputs: TTL (5 VDC, 35 mA), 32 outputs	CJ1W-MD563*	64	0.19	---	110 g max.
B7A Interface Units		32 inputs, 32 outputs	CJ1W-B7A22	64	0.07	---	80 g max.

* The cable-side connector is not provided with Units equipped with cables. Purchase the connector separately (Refer to *4-4-4 Wiring CJ-series Basic I/O Units with Connectors*.), or use an OMRON Connector-Terminal Block Conversion Unit or I/O Relay Terminal (Refer to *4-4-5 Connecting to Connector-Terminal Block Conversion Units or I/O Relay Terminals*.).

CJ-series Special I/O Units

Type	Name	Specifications	Model	Unit No.	Number of words allocated	Words allocated in DM Area	Number of mountable Units	Current consumption (A)		Weight
								5 VDC	24 VDC	
Special I/O Units	Analog Input Unit with Universal Inputs	4 inputs, fully universal	CJ1W-AD04U	0 to 95	10 words	100 words	40 Units	0.32	---	150 g max.
	Analog Input Units	8 inputs (4 to 20 mA, 1 to 5 V, etc.)	CJ1W-AD081-V1	0 to 95	10 words	100 words	40 Units	0.42	---	140 g max.
		4 inputs (4 to 20 mA, 1 to 5 V, etc.)	CJ1W-AD041-V1	0 to 95	10 words	100 words	40 Units	0.42	---	140 g max.
		4 inputs (4 to 20 mA, 1 to 5 V, etc.)	CJ1W-AD042	0 to 95	10 words	100 words	40 Units	0.52	---	150 g max.
	Analog Output Units	4 outputs (1 to 5 V, 4 to 20 mA, etc.)	CJ1W-DA041	0 to 95	10 words	100 words	40 Units	0.12	---	150 g max.
		2 outputs (1 to 5 V, 4 to 20 mA, etc.)	CJ1W-DA021	0 to 95	10 words	100 words	40 Units	0.12	---	150 g max.
		8 outputs (1 to 5 V, 0 to 10 V, etc.)	CJ1W-DA08V	0 to 95	10 words	100 words	40 Units	0.14	---	150 g max.
		8 outputs (4 to 20 mA)	CJ1W-DA08C	0 to 95	10 words	100 words	40 Units	0.14	---	150 g max.
		4 outputs (1 to 5 V, 0 to 10 V, etc.)	CJ1W-DA042V	0 to 95	10 words	100 words	40 Units	0.40	---	150 g max.
	Analog I/O Unit	4 inputs (1 to 5 V, 4 to 20 mA, etc.) 2 outputs (1 to 5 V, 4 to 20 mA, etc.)	CJ1W-MAD42	0 to 95	10 words	100 words	40 Units	0.58	---	150 g max.
	Analog Input Unit with Universal Inputs	4 inputs, fully universal Resolution: 1/256,000, 1/64,000, 1/16,000	CJ1W-PH41U	0 to 95	10 words	100 words	40 Units	0.30	---	150 g max.
	Analog Current Input Unit	DC voltage or DC current, 2 inputs	CJ1W-PDC15	0 to 95	10 words	100 words	40 Units	0.18	---	150 g max.
	Temperature Control Units	2 control loops, thermocouple inputs, NPN outputs, heater burnout detection	CJ1W-TC003	0 to 94 (uses words for 2 unit numbers)	20 words	200 words	40 Units	0.25	---	150 g max.
		2 control loops, thermocouple inputs, PNP outputs, heater burnout detection	CJ1W-TC004	0 to 94 (uses words for 2 unit numbers)	20 words	200 words	40 Units	0.25	---	150 g max.
		2 control loops, temperature-resistance thermometer inputs, NPN outputs, heater burnout detection	CJ1W-TC103	0 to 94 (uses words for 2 unit numbers)	20 words	200 words	40 Units	0.25	---	150 g max.
		2 control loops, temperature-resistance thermometer inputs, PNP outputs, heater burnout detection	CJ1W-TC104	0 to 94 (uses words for 2 unit numbers)	20 words	200 words	40 Units	0.25	---	150 g max.
	ID Sensor Units	V680-series single-head type	CJ1W-V680C11	0 to 95	10 words	100 words	40 Units	0.26	0.130	120 g max.
		V680-series two-head type	CJ1W-V680C12	0 to 94 (uses words for 2 unit numbers)	20 words	200 words	40 Units	0.32	0.260	130 g max.
	High-speed Counter Unit	Number of counter channels: 2, Maximum input frequency: 500 kHz, line driver compatible	CJ1W-CT021	0 to 92 (uses words for 4 unit numbers)	40 words	400 words	24 Units	0.28	---	100 g max.

Type	Name	Specifications	Model	Unit No.	Number of words allocated	Words allocated in DM Area	Number of mountable Units	Current consumption (A)		Weight
								5 VDC	24 VDC	
Special I/O Units	CompoNet Master Units	CompoNet remote I/O	CJ1W-CRM21*1	0 to 94 (uses words for 2 unit numbers)	20 words	None	40 Units	0.40	---	130 g max.
		Communications mode 0: 128 inputs and 128 outputs for Word Slaves								
		Communications mode 1: 256 inputs and 256 outputs for Word Slaves		0 to 92 (uses words for 4 unit numbers)	40 words	None	24 Units	0.40	---	
		Communications mode 2: 512 inputs and 512 outputs for Word Slaves		0 to 88 (uses words for 8 unit numbers)	80 words	None	12 Units	0.40	---	
		Communications mode 3: 256 inputs and 256 outputs for Word Slaves, 128 inputs and 128 outputs for Bit Slave Units		0 to 88 (uses words for 8 unit numbers)	80 words	None	12 Units	0.40	---	
		Communications mode 8: 1,024 inputs and 1,024 outputs max. for Word Slaves, 256 inputs and 256 outputs max. for Bit Slave Units		0 to 95 (uses words for 1 unit number)	10 words*2	None*1	40 Units	0.40	---	

*1 A CPU Unit with unit version 1.01 or later and Sysmac Studio version 1.02 or higher are required. Refer to *A-8 Version Information* for information on versions.

*2 In addition, up to 208 other words are allocated depending on the number of Slave Units to which words are allocated and their I/O capacity. Use the CX-Integrator to allocate words.

CJ-series CPU Bus Units

Type	Name	Specifications	Model	Unit No.	Number of words allocated	Maximum number of Units*1	Current consumption (A)		Weight
							5 VDC	24 VDC	
CPU Bus Units	Serial Communications Units	Two RS-232C ports High-speed models	CJ1W-SCU22	0 to F	25 words	16 Units	0.28*1	---	160 g max.
		Two RS-422A/485 ports High-speed models	CJ1W-SCU32				0.40		120 g max.
		One RS-232C port and one RS-422A/485 port High-speed models	CJ1W-SCU42				0.36*1		140 g max.
	DeviceNet Unit	DeviceNet remote I/O, 2,048 points; User-specified allocations are possible without the CX-Integrator.	CJ1W-DRM21	0 to F	25 words	16 Units	0.29	---	118 g max.*2
	EtherNet/IP Unit	Tag data links, CIP message communications, FTP server, etc.	CJ1W-EIP21*3	0 to F	25 words	4 Units	0.41	---	94 g max.

*1 Increases by 0.15 A/Unit when an NT-AL001 RS-232C/RS-422A Link Adapter is used. Increases by 0.04 A/Unit when a CJ1W-CIF11 RS-422A Converter is used.

*2 Includes the weight of accessory connectors.

*3 Use an EtherNet/IP Unit with a unit version of 2.1 or later. Also use a CPU Unit with unit version 1.01 or later and Sysmac Studio version 1.02 or higher. Refer to *A-8 Version Information* for information on version upgrades.

2-2 Connecting to the Sysmac Studio

Connect the NJ-series CPU Unit and the Sysmac Studio through USB or EtherNet/IP.

Refer to *3-7-2 Connection* for information on how to make the connection between the NJ-series CPU Unit and the Sysmac Studio.

2-3 Network Configuration

You can make networks in the following layers with an NJ-series Controller.

For details on communications networks that you can connect to, refer to the *NJ-series CPU Unit Software User's Manual* (Cat. No. W501).

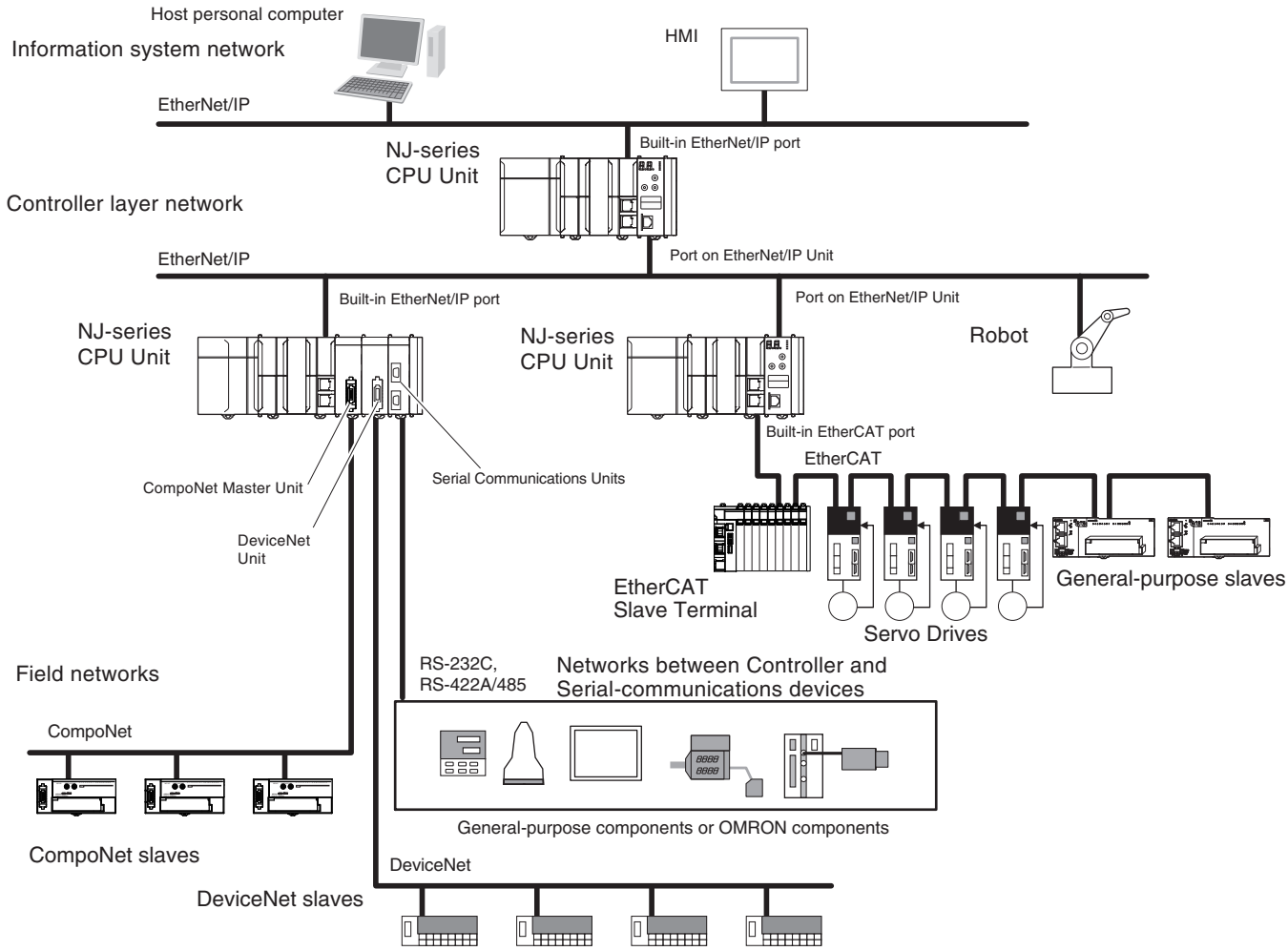

Level	Network type	Protocols	Required devices
Information networks	EtherNet/IP	• CIP message communications • FTP server • Socket service • NTP client	Built-in EtherNet/IP port EtherNet/IP Unit*1
Networks between Controllers	EtherNet/IP	• Tag data link communications • CIP message communications • Socket service	
Networks between Controllers and serial-communications devices	Serial Communications	Protocol Macro, No-protocol, CompoWay/F, Modbus, NT Link, and Host Link*2	Serial Communications Units
Field networks	EtherCAT	EtherCAT protocol	Built-in EtherCAT port
	DeviceNet	DeviceNet protocol	DeviceNet Unit
	CompoNet	CompoNet protocol	CompoNet Master Unit

*1 Use EtherNet/IP Units with unit version 2.1 or later. Also use CPU Units with unit version 1.01 or later and Sysmac Studio version 1.02 or higher. Refer to *A-8 Version Information* for information on version upgrades.

3

Configuration Units

This section describes the configuration devices in the CJ-series Unit configuration.

3-1 CPU Units . . . 3-2
- 3-1-1 Models and Specifications . . . 3-2
- 3-1-2 Components and Functions . . . 3-2

3-2 SD Memory Cards . . . 3-9
- 3-2-1 Models and Specifications . . . 3-9
- 3-2-2 Purpose . . . 3-9
- 3-2-3 Installing and Removing . . . 3-9

3-3 Power Supply Units . . . 3-12
- 3-3-1 Models and Specifications . . . 3-12
- 3-3-2 Components and Functions . . . 3-14
- 3-3-3 Selecting a Power Supply Unit . . . 3-15

3-4 CJ-series Basic I/O Units . . . 3-20
- 3-4-1 Models and Specifications . . . 3-20
- 3-4-2 Part Names and Functions . . . 3-21

3-5 B7A Interface Ports . . . 3-24
- 3-5-1 Overview . . . 3-24
- 3-5-2 System Configuration . . . 3-24
- 3-5-3 Models . . . 3-24
- 3-5-4 B7A Communications Specifications . . . 3-25
- 3-5-5 Common Specifications . . . 3-26
- 3-5-6 B7A Interface Port I/O Types . . . 3-26
- 3-5-7 Parts and Names . . . 3-27
- 3-5-8 Transmission Error Processing . . . 3-29

3-6 CJ-series I/O Control Units and I/O Interface Units . . . 3-30
- 3-6-1 Models and Specifications . . . 3-30
- 3-6-2 Component and Functions . . . 3-30

3-7 Sysmac Studio . . . 3-31
- 3-7-1 Model Numbers . . . 3-31
- 3-7-2 Connection . . . 3-32

3-1 CPU Units

3-1-1 Models and Specifications

Type of Unit	Model	I/O capacity/Maximum number of Configuration Units (Maximum number of Expansion Racks)	Program capacity	Memory capacity for variables	Number of motion axes	Database connection service
NJ501 CPU Units	NJ501-1500	2,560 points/40 Units (3 Expansion Racks)	20 MB	2 MB: Retained during power interruptions 4 MB: Not retained during power interruptions	64	Not supported.
	NJ501-1400				32	
	NJ501-1300				16	
	NJ501-1520				64	Supported.
	NJ501-1420				32	
	NJ501-1320				16	
NJ301 CPU Units	NJ301-1200		5 MB	0.5 MB: Retained during power interruptions. 2 MB: Not retained during power interruptions.	8	Not supported.
	NJ301-1100				4	

3-1-2 Components and Functions

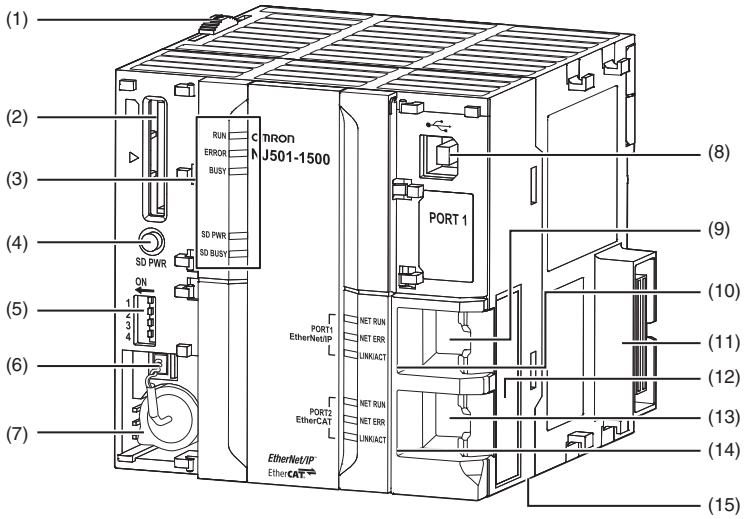

Number	Name	Function
1	Slider	Holds the Units together.
2	SD Memory Card connector	Connects the SD Memory Card to the CPU Unit.
3	CPU Unit operation indicators	Shows the operation status of the CPU Unit. Refer to *CPU Unit Operation Status Indicators* on page 3-4.
4	SD Memory Card power supply switch	Turns OFF the power supply so that you can remove the SD Memory Card. Refer to *3-2 SD Memory Cards*.
5	DIP switch	Used in Safe Mode*1 or when backing up data.*2 Normally, turn OFF all of the pins.
6	Battery connector	Connector to mount the backup battery.
7	Battery	Battery for backup.
8	Peripheral USB port	Connects to the Sysmac Studio via a USB cable.
9	Built-in EtherNet/IP port (port 1)	Connects the built-in EtherNet/IP with an Ethernet cable.
10	Built-in EtherNet/IP port operation indicators	Shows the operation status of the built-in EtherNet/IP. Refer to *Built-in EtherNet/IP Port (Port 1) Indicators* on page 3-6.
11	Unit connector	Connects to another Unit.
12	ID information label	Shows the ID information of the CPU Unit.
13	Built-in EtherCAT port (port 2)	Connects the built-in EtherCAT with an Ethernet cable.
14	Built-in EtherCAT port operation indicators	Shows the operation status of the built-in EtherCAT. Refer to *Built-in EtherCAT Port (Port 2) Indicators* on page 3-7.
15	DIN Track mounting pins	Secures the Unit to a DIN Track.

*1 To use Safe Mode, set the DIP switch as shown below and then turn ON the power supply to the Controller.

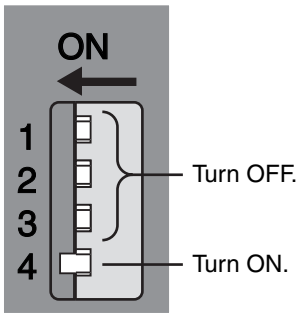

If the power supply to the Controller is turned ON with the CPU Unit in Safe Mode, the CPU Unit will start in PROGRAM mode. Use the Safe Mode if you do not want to execute the user program when the power supply is turned ON or if it is difficult to connect the Sysmac Studio.
Use the Safe Mode when it is difficult to connect the Sysmac Studio. For information on Safe Mode, refer to the *NJ-series Troubleshooting Manual* (Cat. No. W503).

*2 Refer to the *NJ-series CPU Unit Software User's Manual* (Cat. No. W501) for details on backing up data.

CPU Unit Operation Status Indicators

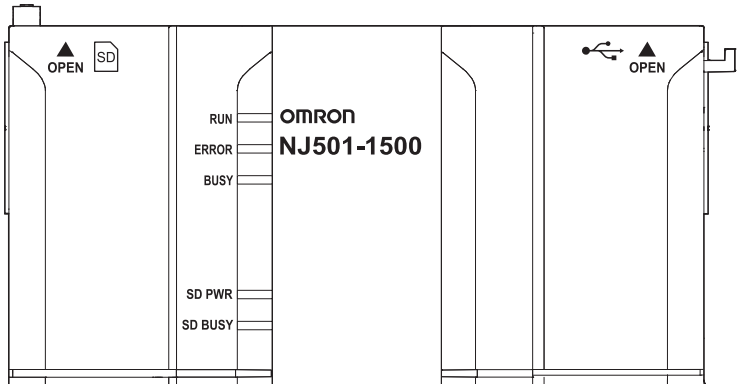

You can check the CPU Unit status with the indicators at the top of the front panel of the CPU Unit. The following table describes these indicators.

Indicator	Color	Status	Meaning
RUN	Green	Lit	The CPU Unit is in normal operation in RUN mode. (The user program is in execution.)
		Flashing (3-s intervals)	An Incorrect Power Supply Unit Connected error occurred. (A CJ-series Power Supply Unit is connected in the CPU Rack.) The CPU Unit will not operate and the ERROR indicator will light.
		Flashing (1-s intervals)	The CPU Unit is starting (entering RUN mode or PROGRAM mode at startup).
		Not lit	Operation is stopped in PROGRAM mode, when a CPU Unit reset is in progress, or when any of the following errors occurs. • Controller error in the major fault level • CPU error (WDT error)
ERROR	Red	Lit	Self-diagnosis found one of the following errors. • Controller error in the major fault level • CPU error (WDT error) The CPU Unit operation will stop, and all outputs will turn OFF.
		Flashing (1-s intervals)	Self-diagnosis found one of the following errors. • Controller error in the partial fault level (an error in which all control of a Function Module is disabled) • Controller error in the minor fault level (an error in which partial control of a Function Module is disabled) CPU Unit operation will continue for either of these errors. Operation will stop for the Function Module in which a Controller error in the partial fault level occurred. Operation will continue for the Function Module in which a Controller error in the minor fault level occurred.
		Not lit	The CPU Unit is in normal operation, a CPU reset is in progress, or monitored information occurred. (CPU Unit operation will continue.)
BUSY	Yellow	Flashing	Built-in non-volatile memory access in progress.
		Not lit	Other than the above.

Indicator	Color	Status	Meaning
SD PWR	Green	Lit	Power is being supplied to the SD Memory Card and the SD Memory Card can be used.
		Flashing	---
		Not lit	The power supply for the SD Memory Card is stopped, an SD Memory Card is not mounted, or the file format of the mounted SD Memory Card is not supported.
SD BUSY	Yellow	Lit	SD Memory Card access in progress.
		Not lit	SD Memory Card access not in progress

Precautions for Safe Use

- Do not turn OFF the power supply to the Controller while the BUSY indicator flashes. While the BUSY indicator is lit, the user program and settings in the CPU Unit are being backed up in the built-in non-volatile memory. The data will not be backed up if the power supply is turned OFF. The next time that the Controller is started, a Controller error in the major fault level will occur and operation will stop.
- Do not turn OFF the power supply or remove the SD Memory Card while SD Memory Card access is in progress (i.e., while the SD BUSY indicator flashes). Data may become corrupted, and the Controller will not operate correctly if it uses corrupted data. To remove an SD Memory Card from the CPU Unit when power is supplied to the CPU Unit, press the SD Memory Card power supply switch and wait for the SD PWR indicator to turn OFF before you remove the SC Memory Card.

You can check the operating status of the CPU Unit with the PWR, RUN, and ERROR indicators on the front panels of the Power Supply Unit and CPU Unit. You can check the operating status of the CPU Unit from the status of front-panel indicators, the status of user program execution, and the ability to connect communications from the Sysmac Studio or NS-series PTs during startup, during normal operation, and when errors occur.

CPU Unit operating status		Power Supply Unit	CPU Unit		User program execution status	Communications with Sysmac Studio or NS-series PT
		PWR (green)	RUN (green)	ERROR (red)		
Startup		Lit	Flashing (1-s intervals)	Not lit	Stopped.	Not possible.
Normal operation	**RUN mode**	Lit	Lit	Not lit	Continues.	Possible.
	PROGRAM mode	Lit	Not lit	Not lit	Stopped.	
Fatal error in CPU Unit	**Power Supply Error*1**	Not lit	Not lit	Not lit	Stopped.	Not possible.
	CPU Unit Reset*1	Lit	Not lit	Not lit	Stopped.	
	Incorrect Power Supply Unit Connected*1	Lit	Flashing (3-s intervals)	Lit	Stopped.	
	CPU Unit Watchdog Timer Error*1	Lit	Not lit	Lit	Stopped.	
Non-fatal error in CPU Unit	**Major fault*2**	Lit	Not lit	Lit	Stopped.	Possible. (Communications can be connected from an NS-series PT if EtherNet/IP is operating normally.)
	Partial fault*2	Lit	Lit	Flashing (1-s intervals)	Continues.*3	
	Minor fault*2	Lit	Lit	Flashing (1-s intervals)	Continues.	
	Observation*2	Lit	Lit	Not lit	Continues.	

*1 Refer to *5-1-2 Fatal Errors in the CPU Unit* for information on individual errors.

*2 Refer to *5-1-3 Non-fatal error in CPU Unit* for information on individual errors.

*3 The function module where the error occurred stops.

Refer to *5-1 Operation after an Error* for information on error status.

Built-in EtherNet/IP Port (Port 1) Indicators

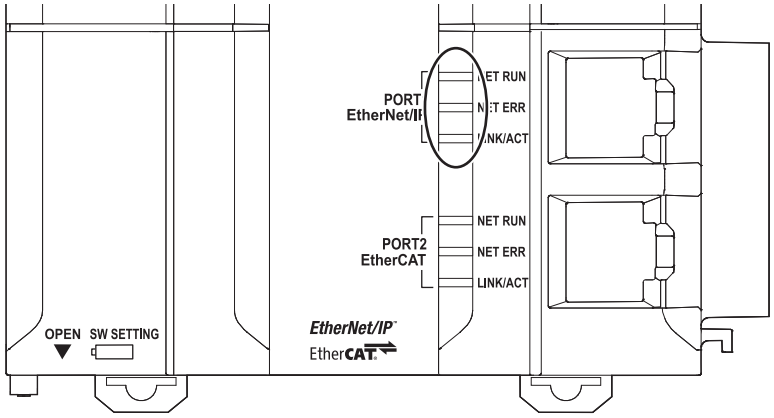

Indicator	Color	Status	Contents
NET RUN	Green	Lit	Normal startup status.
		Flashing	Ethernet communications are in progress. • Tag data link connection establishment in progress. • IP address acquisition with BOOTP in progress.
		Not lit	You cannot perform Ethernet communications. • The power supply is OFF or the CPU Unit was reset. • A MAC address error or communications Controller error occurred.
NET ERR	Red	Lit	An error for which the user cannot recover operation occurred. • A MAC address error or communications Controller error occurred.
		Flashing	An error for which the user can recover operation occurred. • An error occurred in TCP/IP communications or CIP communications. • FTP server setting error, NTP server setting error, etc. • Tag data link setting error, tag data link verification error, etc.
		Not lit	There are no Ethernet communications errors. • The power supply is OFF or the CPU Unit was reset.
LINK/ACT	Yellow	Lit	The link was established.
		Flashing	The link is established, and data communications are in progress.
		Not lit	A link was not established. • The cable is not connected. • The power supply is OFF or the CPU Unit was reset.

Built-in EtherCAT Port (Port 2) Indicators

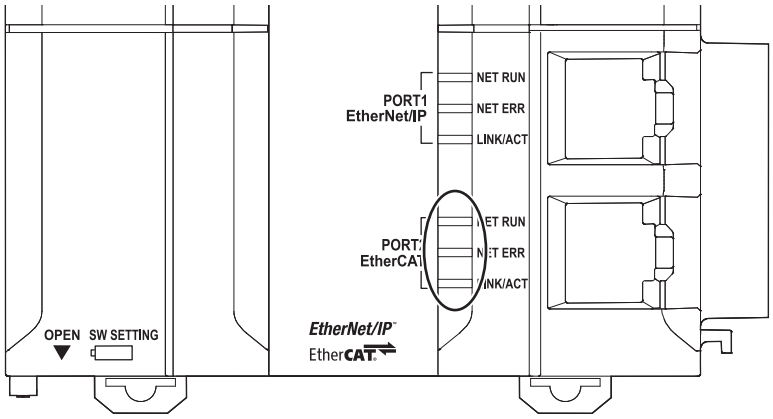

Indicator	Color	Status	Description
NET RUN	Green	Lit	EtherCAT communications are in progress. • Inputs and outputs for I/O data are in operation.
		Flashing	EtherCAT communications are being established. This indicator shows either of the following conditions. • Only message communications are in operation. • Only message communications and I/O data inputs are in operation.
		Not lit	EtherCAT communications are stopped. • The power supply is OFF or the CPU Unit was reset. • A MAC address error, communications Controller error, or other error occurred.
NET ERR	Red	Lit	A hardware error or unrecoverable error occurred, such as for exception processing.
		Flashing	A recoverable error occurred.
		Not lit	There are no errors.
LINK/ACT	Yellow	Lit	A link was established.
		Flashing	Data communications are in progress after establishing link. Flashes every time data is sent or received.
		Not lit	The link was not established.

DIP Switch

Use the CPU Unit with all the DIP switch pins turned OFF.

Additional Information

The DIP switch is not used to write-protect the user program of the NJ-series Controller. Set write-protection in the Startup Write Protection Settings in the CPU Unit Protection Settings from the Sysmac Studio.

Battery

The following Battery is built in as a standard feature.

Model	Appearance	Specifications
CJ1W-BAT01	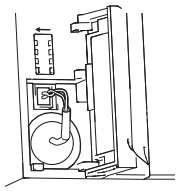	Effective life (i.e., maximum life expectancy): 5 years The following values are retained during power interruptions. • Values of variables with a Retain attribute • Words for CJ-series Units in the Holding, DM, and EM Areas • Clock information • Some system-defined variables • Event logs

ID Information Label

You can check the ID information of the CPU Unit status with the ID information label on the right side of the CPU Unit.

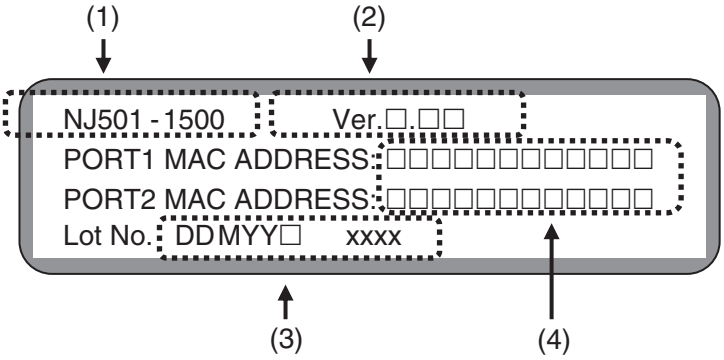

Number	Name	Function
1	Unit model	Shows the model of the CPU Unit.
2	Unit version	Shows the unit version of the CPU Unit.
3	Lot number and serial number	Shows the lot number and the serial number of the CPU Unit. DDMYY: Lot number, □: For use by OMRON, xxxx: Serial number M is 1 to 9 for January to September, X for October, Y for November, and Z for December.
4	MAC addresses	Shows the MAC addresses of the built-in ports on the CPU Unit.

3-2 SD Memory Cards

3-2-1 Models and Specifications

SD cards and SDHC cards are supported, but use one of the following OMRON Cards. OMRON is not responsible for the operation, performance, or write life of any other SD or SDHC card.

Model	Card type	Capacity	Format	Number of overwrites	Weight
HMC-SD291	SD Card	2 GB	FAT16	100,000	2 g max.
HMC-SD491	SDHC Card	4 GB	FAT32	100,000	2 g max.

Additional Information

Write Protection Key
You will not be able to write to the SD Memory Card if the key is set to the LOCK position. (Use this setting to prevent overwriting.)

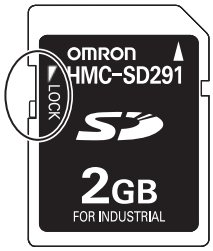

3-2-2 Purpose

You can use the SD Memory Card for the following applications.

- Read and write files in the SD Memory Card with instructions.
- Read and write files in the SD Memory Card from an FTP client on EtherNet/IP.
- Back up, restore, and verify data in the Controller.
- Transfer data from the SD Memory Card to the Controller when the power is turned ON.

Version Information

A CPU Unit with unit version 1.03 or later and Sysmac Studio version 1.04 or higher are required to use the SD Memory Card backup functions and automatic transfer from SD Memory Cards.

3-2-3 Installing and Removing

Before Using an SD Memory Card

- Observe the following precautions while the SD Memory Card is being accessed. The SD Memory Card may become unusable if these precautions are not followed.
  - Make sure that the SD BUSY indicator is OFF (i.e., the SD Memory Card is not being accessed) before you turn OFF the power supply to the Controller. The SD BUSY indicator is lit when the SD Memory Card is accessed from user the programming or from a computer through FTP.

  - Never remove the SD Memory Card while the CPU is accessing the SD Memory Card. Press the SD Memory Card power supply switch and wait for the SD BUSY indicator to go OFF before removing the SD Memory Card.
- Never insert the SD Memory Card facing the wrong way. If the SD Memory Card is inserted forcibly, it may become unusable.
- To format the SD Memory Card (e.g., to delete all of the data), insert the SD Memory Card in the CPU Unit and perform the operation from the Sysmac Studio.
- The SD Memory Card uses flash memory, and so its service life is limited. When the end of the SD Memory Card's service life approaches, the ability to write data is lost, and data is sometimes not retained after writing. The service life depends on the size of the data that is written and on the ambient temperature. For the unlikely event that data is lost, it is recommended to periodically back up data.
- The service life may be extremely short if a non-OMRON SD Memory Card is used. Also, operation may be affected due to deterioration in writing performance.
- If you use an OMRON SD Memory Card, the end of the life of the SD Memory Card can be detected in the following ways.
  - System-defined variable *_Card1Deteriorated* (SD Memory Card Life Warning Flag)
  - SD Memory Card Life Exceeded (Observation) event in the event log

Installing the SD Memory Card

1 Pull the left side of the SD Memory Card cover forward and remove from the Unit.

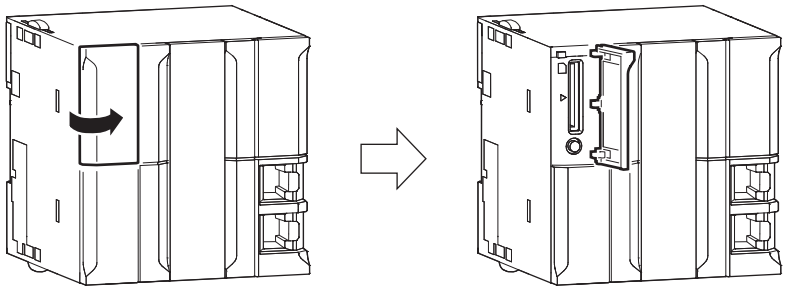

2 Insert the SD Memory Card with the label facing to the left. (Insert the SD Memory Card with the label facing the triangle on the CPU Unit.)

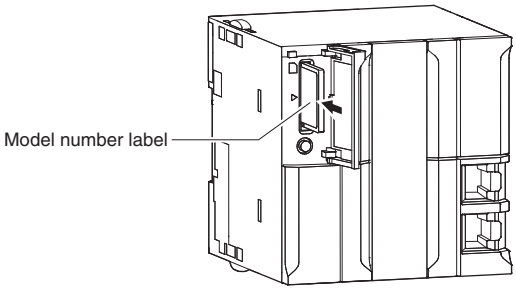

3 Push the SD Memory Card securely into the compartment.

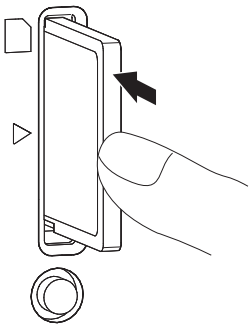

Removing the SD Memory Card

1 Press the SD Memory Card power supply switch (SD PWR).

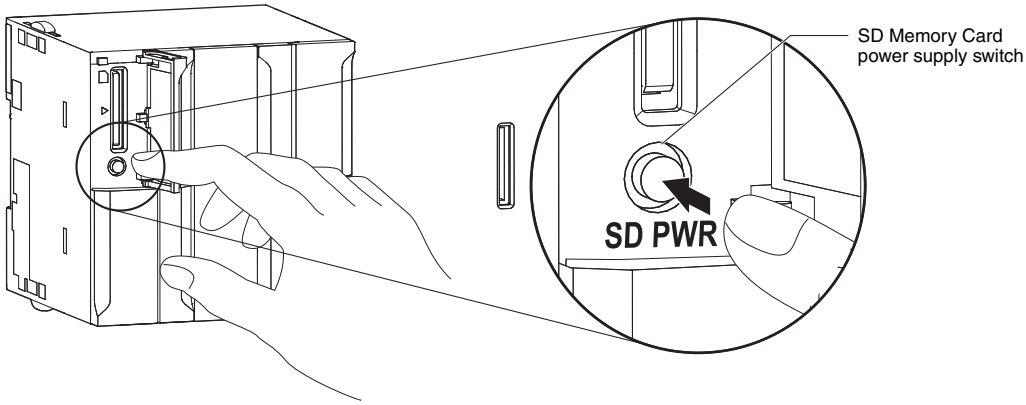

2 Press the SD Memory Card after the SD BUSY indicator is no longer lit.

The SD Memory Card will be ejected from the compartment.

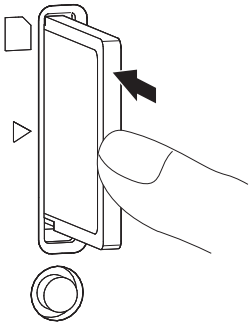

3 Pull out the SD Memory Card.

4 Close the Memory Card cover when an SD Memory Card is not being used.

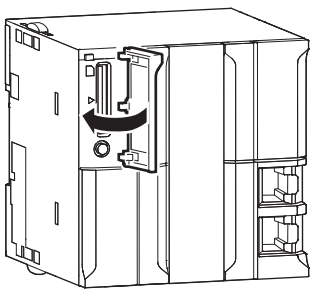

3-3 Power Supply Units

3-3-1 Models and Specifications

NJ-series Power Supply Units

Use an NJ-series Power Supply Unit to supply power to an NJ-series CPU Rack or Expansion Rack.

Precautions for Correct Use

- Do not use the Power Supply Units in the system beyond the rated supply capacity range given in the following specifications. Doing so may result in operation stopping, incorrect operation, or failure to correctly back up required data at power interruptions.
- Use only NJ-series Power Supply Units on NJ-series CPU Racks and Expansion Racks. Operation is not possible if you use a CJ-series Power Supply Unit with an NJ-series CPU Unit or an NJ-series Power Supply Unit with a CJ-series CPU Unit.

Item	Specifications	
Model	NJ-PA3001	NJ-PD3001
Supply voltage	100 to 240 VAC (wide-range), 50/60 Hz	24 VDC
Operating voltage and frequency ranges	85 to 264 VAC, 47 to 63 Hz	19.2 to 28.8 VDC
Power consumption	120 VA max.	60 W max.
Inrush current*1	At 100 VAC: 20 A/8 ms max. for cold start at room temperature At 200 VAC: 40 A/8 ms max. for cold start at room temperature	At 24 VDC: 30 A/20 ms max. for cold start at room temperature
Output capacity*2	5 VDC, 6.0 A (including supply to CPU Unit using CPU Rack) 5 VDC, 6.0 A (using Expansion Rack) 24 VDC, 1.0 A Total: 30 W max.	
Output terminal (service supply)	Not provided	
RUN output*3	Contact configuration: SPST-NO Switch capacity: 250 VAC, 2 A (resistive load) 120 VAC, 0.5 A (inductive load), 24 VDC, 2A (resistive load)	
Replacement notification function	Not provided.	
Insulation resistance*4	20 MΩ min. (at 500 VDC) between AC external and GR terminals	20 MΩ min. (at 500 VDC) between DC external and GR terminals
Dielectric strength*4*5	2,300 VAC 50/60 Hz for 1 min between AC external and GR terminals Leakage current: 10 mA max.	1,000 VAC 50/60 Hz for 1 min between DC external and GR terminals Leakage current: 10 mA max.
Noise immunity	2 kV on power supply line (Conforms to IEC 61000-4-4.)	
Vibration resistance	5 to 8.4 Hz, 3.5-mm amplitude, 8.4 to 150 Hz, acceleration: 9.8 m/s^2 in X, Y, and Z directions for 100 minutes (Time coefficient: 10 minutes × coefficient factor 10 = total time 100 min.) (according to IEC 60068-2-6)	

Item	Specifications
Shock resistance	147 m/s^2 3 times each in X, Y, and Z directions (Relay Output Unit: 100 m/s^2) (according to IEC 60068-2-27)
Ambient operating temperature	0 to 55°C
Ambient operating humidity	10% to 90% (with no condensation)
Atmosphere	Must be free from corrosive gases.
Ambient storage temperature	−20 to 75°C

*1 The AC and DC values above are given for a cold start, and the AC values are at room temperature. The AC inrush control circuit uses a thermistor element with a low-temperature current control characteristic. If the ambient temperature is high or the Controller is hot-started, the thermistor will not be sufficiently cool, and the inrush current given in the table may be exceeded by up to twice the given value. The DC inrush control circuit uses a capacitor-charging delay circuit. If the power is OFF for only a short time for a hot-start, the capacitor will not sufficiently discharge and the inrush current given in the table may be exceeded by up to twice the given value. An inrush current of approximately 4 A may occur and continue for 1 s when the power is turned ON. When selecting fuses, breakers, and external DC power supply devices for external circuits, allow sufficient margin in shut-off performance.

*2 Internal components in the Power Supply Unit will deteriorate or be damaged if the Power Supply Unit is used for an extended period of time exceeding the power supply output capacity or if the outputs are shorted.

*3 Supported only when mounted to CPU Rack.

*4 The tests can also be performed with the LG terminal and GR terminal connected to each other.

*5 Change the applied voltage gradually using the adjuster on the Tester. If the full dielectric strength voltage is applied or turned OFF using the switch on the Tester, the generated impulse voltage may damage the Power Supply Unit.

3-3-2 Components and Functions

NJ-PA3001

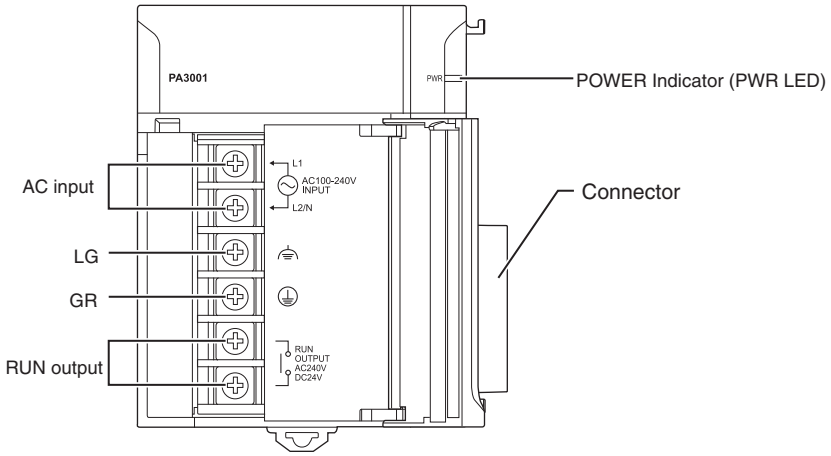

NJ-PD3001

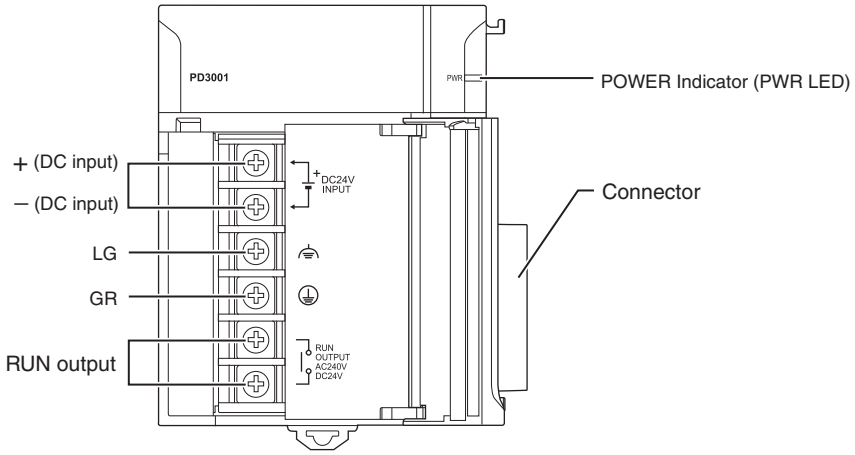

AC Input

Supply 100 to 240 VAC (allowable: 85 to 264 VAC).

The NJ-PA3001 has a wide input range, so it does not have voltage switching terminals.

DC Input

Supply 24 VDC (allowable: 19.2 to 28.8 VDC.)

LG

Ground to a resistance of 100 Ω or less to increase noise resistance and avoid electric shock.

GR

Ground to a resistance of 100 Ω or less to avoid electric shock.

RUN Output (NJ-PA3001/-PD3001)

The internal contacts for the RUN output turn ON when the CPU Unit is in RUN status.

The following operation occurs.

Status	Operation
In operation (RUN mode).	ON
The CPU Unit is starting (until entering the operating status that is specified in the Startup Mode setting).	OFF
Operation stopped (PROGRAM mode).	
Controller error in the major fault level occurred.	

The Power Supply Unit must be on the CPU Rack to use this output.

3-3-3 Selecting a Power Supply Unit

First select the Power Supply Unit according to whether it can be used on the CPU Rack, the power supply voltage, and the need for a RUN output. Then check the following table to make sure that the current consumption and power consumption requirements of each Rack are met.

Model	Power supply voltage	Output current			Output capacity	RUN output	Replacement notification function	CPU Rack	Expansion Racks
		5-VDC CPU Rack*	5-VDC Expansion Rack	24 VDC					
NJ-PA3001	100 to 240 VAC	6.0 A	6.0 A	1.0 A	30 W	Yes	No	Yes	Yes
NJ-PD3001	24 VDC	6.0 A	6.0 A	1.0 A	30 W	Yes	No	Yes	Yes

* Including supply to the CPU Unit.

Refer to *CPU Rack* on page 2-5, *Expansion Racks* on page 2-9, and *CJ-series Configuration Units* on page 2-11 for Unit current consumptions. Refer to *Rack Current Consumption and Width Display* on page 3-17 for the procedure to check the current and power consumptions for each Rack from the Sysmac Studio.

Calculating Unit Current Consumption

The amount of current/power that can be supplied to the Units mounted in a Rack is limited by the capacity of the Rack's Power Supply Unit. Refer to the following tables when designing your system so that the total current consumption of the mounted Units does not exceed the maximum current for each voltage group and the total power consumption does not exceed the maximum power supplied by the Power Supply Unit.

Refer to *CPU Rack* on page 2-5, *Expansion Racks* on page 2-9, and *CJ-series Configuration Units* on page 2-11 for the current consumptions of the Units to use in the Unit current consumption calculations.

● Maximum Current and Power Supplied by Power Supply Units

The following table shows the maximum currents and power that can be supplied by Power Supply Units in CPU Racks and Expansion Racks.

Note 1 When calculating current/power consumption in a CPU Rack, be sure to include the power required by the CPU Unit itself, as well as the I/O Control Unit if one or more Expansion Racks is connected.

2 Be sure to include the power required by the I/O Interface Unit when calculating current/power consumption in an Expansion Rack.

Model	Output current			Output capacity
	5-VDC CPU Rack*	5-VDC Expansion Rack	24 VDC	
NJ-PA3001	6.0 A	6.0 A	1.0 A	30 W
NJ-PD3001	6.0 A	6.0 A	1.0 A	30 W

* Including supply to the CPU Unit.

● Example Calculations

Example 1: In this example, the following Units are mounted to a CPU Rack with an NJ-PA3001 Power Supply Unit.

Unit	Model	Quantity	Voltage group	
			5-V	24-V
CPU Unit	NJ501-1500	1 unit	1.90 A	---
I/O Control Unit	CJ1W-IC101	1 unit	0.02 A	---
Input Units	CJ1W-ID211	2 units	0.08 A	---
	CJ1W-ID231	2 units	0.09 A	---
Output Unit	CJ1W-OC201	2	0.09 A	0.048 A
Special I/O Unit	CJ1W-DA041	1	0.12 A	---
CPU Bus Unit	CJ1W-SCU22	1	0.28 A	---
Current consumption	Calculation		1.9 A + 0.02 A + 0.08 A × 2 + 0.09 A × 2 + 0.09 A × 2 + 0.12 A + 0.28 A	0.048 A × 2
	Result		2.84 A (≤6.0 A)	0.096 A (≤1.0 A)
Power consumption	Calculation		2.84 A × 5 V = 14.2 W	0.096 A × 24 V = 2.3 W
	Result		14.2 W + 2.30 W = 16.5 W (≤30 W)	

Example 2: In this example, the following Units are mounted to a CJ-series Expansion Rack with an NJ-PA3001 Power Supply Unit.

Unit	Model	Quantity	Voltage group	
			5-V	24-V
I/O Interface Unit	CJ1W-II101	1	0.13 A	---
Input Unit	CJ1W-ID211	2	0.08 A	---
Output Unit	CJ1W-OD231	8	0.14 A	---
Current consumption	Calculation		0.13 A + 0.08 A × 2 + 0.14 A × 8	---
	Result		1.41 A (≤6.0 A)	---
Power consumption	Calculation		1.41 A × 5 V = 7.1 W	---
	Result		7.1 W (≤30 W)	

Additional Information

Rack Current Consumption and Width Display

The width, current consumption, and power consumption for each Rack are displayed on the right side of the CPU/Expansion Racks Tab Page in the Controller Configurations and Setup of the Sysmac Studio.

Click ▼ to display the information for the Rack.

If the capacity of a Power Supply Unit is exceeded, the display will turn red.

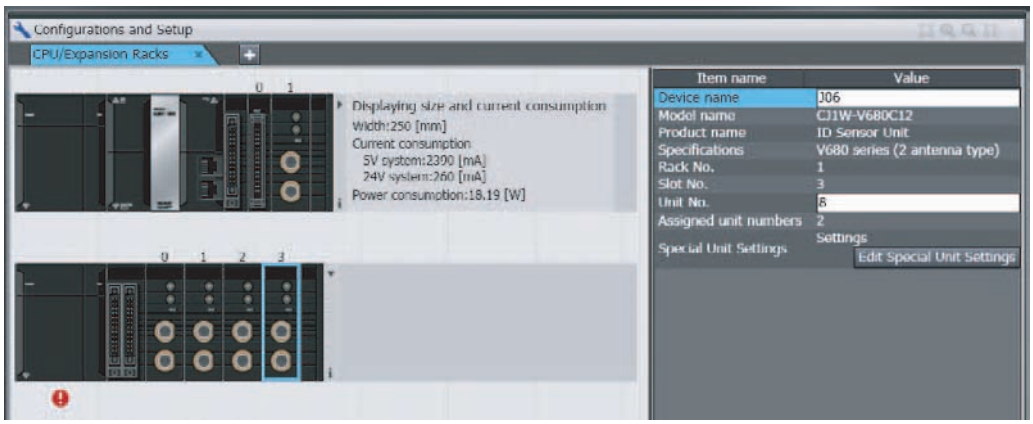

Calculating Power Consumption

The ambient operating temperature at the control panel where an NJ-series Controller is mounted must be no higher than 55°C.

This section describes how to calculate the power consumption of a CPU Rack or Expansion Rack for use in the thermal design of the control panel.

● Calculating Power Consumption

Use the following equation to calculate the average power consumption (W) of an NJ-series CPU Rack.

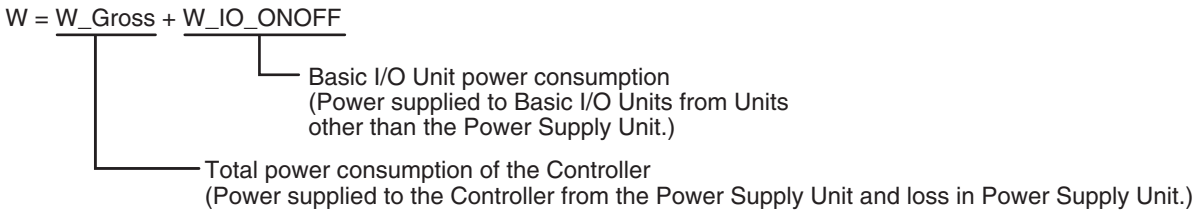

● Total Power Consumption of the Controller (W_Gross)

The Controller power consumption is calculated based on the total power consumption of the Units that are mounted in the CPU Unit and the power conversion rate of the Power Supply Unit.

$W_Gross = W_unit \div \eta$

- W_unit:
  Total power consumption of Units mounted to the CPU Rack. For details on the current consumption and voltage of individual Units, refer to *CJ-series Configuration Units* on page 2-11.
- η:
  Power Supply Unit power conversion rate.
  The rate is 70% for the NJ Series, so use “0.7” in the calculation.

● Basic I/O Unit Power Consumption (W_IO_ONOFF)

The Basic I/O Unit power consumption is the total consumption for the Input Units and the Output Units.

- Input Units

  Rated input voltage × Input current × Number of input points
- Output Units

  Residual voltage × Maximum load current × Number of output points

Note For a CJ-series Basic I/O Unit with transistor outputs, use a residual voltage of 0.1 V in the calculation. For a CJ-series Basic I/O Unit with relay or triac outputs, use a residual voltage of 0 V in the calculation.

Calculation Examples

These examples show how to calculate the power consumption (W) for the following system.

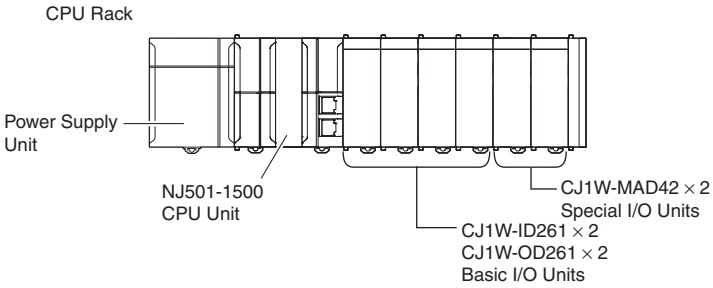

Units	Model	Quantity	5 VDC	Other
CPU Unit	NJ501-1500	1 Unit	1.90 A	---
Input Units	CJ1W-ID261	2 Units	0.09 A	Rated input voltage: 24 V Input current: 4.1 mA Number of input points: 64
Output Unit	CJ1W-OD261	2 Units	0.17 A	Residual voltage: 0.1 V Maximum load current: 6.4 A/Unit
Special I/O Units	CJ1W-MAD42	2 Units	0.58 A	---

* The maximum load current of an Output Unit is the limit for the entire Unit.

● Total Power Consumption of the Controller (W_Gross)

W_Gross = (1.9 + 0.09 × 2 + 0.17 × 2 + 0.58 × 2) A × 5 V ÷ 0.7= 25.6 W

● Basic I/O Unit Power Consumption (W_IO_ONOFF)

W_IO_ONOFF = 24 V × 0.0041 A × 64 points × 2 Units + 0.1 V × 6.4 A × 2 Units = 13.9 W

● Average Power Consumption (W)

W = W_Gross + W_IO_ONOFF = 39.5 W

3-4 CJ-series Basic I/O Units

3-4-1 Models and Specifications

● Basic Input Units

Type of Unit	Name	Specifications		Model	Page
Basic Input Units	DC Input Units	Terminal block, 12 to 24 VDC	8 inputs	CJ1W-ID201	A-6
		Terminal block, 24 VDC	16 inputs	CJ1W-ID211	A-7
				CJ1W-ID212	A-8
		Fujitsu connector, 24 VDC	32 inputs	CJ1W-ID231	A-9
		MIL connector, 24 VDC	32 inputs	CJ1W-ID232	A-10
				CJ1W-ID233	A-11
		Fujitsu connector, 24 VDC	64 inputs	CJ1W-ID261	A-12
		MIL connector, 24 VDC	64 inputs	CJ1W-ID262	A-14
	AC Input Units	Terminal block, 200 to 240 VAC	8 inputs	CJ1W-IA201	A-16
		Terminal block, 100 to 120 VAC	16 inputs	CJ1W-IA111	A-17
	Interrupt Input Unit	Terminal block, 24 VDC	16 inputs	CJ1W-INT01	A-18
	Quick-response Input Unit	Terminal block, 24 VDC	16 inputs	CJ1W-IDP01	A-19

● Basic Output Units

Type of Unit	Name		Specifications		Model	Page
Basic Output Units	Relay Output Units		Terminal block, 250 VAC/24 VDC, 2 A, 8 independent contacts	8 outputs	CJ1W-OC201	A-20
			Terminal block, 250 VAC/24 VDC, 2 A	16 outputs	CJ1W-OC211	A-21
	Triac Output Unit		Terminal block, 250 VAC/24 VDC, 0.6 A	8 outputs	CJ1W-OA201	A-22
	Transistor Output Units	Sinking outputs	Terminal block, 12 to 24 VDC, 2 A	8 outputs	CJ1W-OD201	A-23
			Terminal block, 12 to 24 VDC, 0.5 A	8 outputs	CJ1W-OD203	A-24
			Terminal block, 12 to 24 VDC, 0.5 A	16 outputs	CJ1W-OD211	A-25
			Terminal block, 24 VDC, 0.5 A	16 outputs	CJ1W-OD213	A-26
			Fujitsu connector, 12 to 24 VDC, 0.5 A	32 outputs	CJ1W-OD231	A-27
			MIL connector, 12 to 24 VDC, 0.5 A	32 outputs	CJ1W-OD233	A-28
			MIL connector, 24 VDC, 0.5 A	32 outputs	CJ1W-OD234	A-29
			Fujitsu connector, 12 to 24 VDC, 0.3 A	64 outputs	CJ1W-OD261	A-31
			MIL connector, 12 to 24 VDC, 0.3 A	64 outputs	CJ1W-OD263	A-33
		Sourcing outputs	Terminal block, 24 VDC, 2 A, load short-circuit protection, line disconnection detection	8 outputs	CJ1W-OD202	A-35
			Terminal block, 24 VDC, 0.5 A, load short-circuit protection	8 outputs	CJ1W-OD204	A-37
			Terminal block, 24 VDC, 0.5 A, load short-circuit protection	16 outputs	CJ1W-OD212	A-38
			MIL connector, 24 VDC, 0.5 A, load short-circuit protection	32 outputs	CJ1W-OD232	A-39
			MIL connector, 12 to 24 VDC, 0.3 A	64 outputs	CJ1W-OD262	A-40

● Basic Mixed I/O Units

Type of Unit	Name		Specifications		Model	Page
Mixed I/O Units	24-VDC Inputs/Transistor Output Units	Sinking output	Fujitsu connector Inputs: 24 VDC Outputs: 12 to 24 VDC, 0.5 A	16 inputs 16 outputs	CJ1W-MD231	A-42
			MIL connector Inputs: 24 VDC Outputs: 12 to 24 VDC, 0.5 A		CJ1W-MD233	A-44
			Fujitsu connector Inputs: 24 VDC Outputs: 12 to 24 VDC, 0.3 A	32 inputs 32 outputs	CJ1W-MD261	A-45
			MIL connector Inputs: 24 VDC Outputs: 12 to 24 VDC, 0.3 A		CJ1W-MD263	A-47
		Sourcing output	MIL connector Input: 24 VDC Outputs: 24 VDC, 0.5 A, load short-circuit protection	16 inputs 16 outputs	CJ1W-MD232	A-49
	TTL I/O Units		Inputs: 5 VDC Outputs: 5 VDC, 35 mA	32 inputs 32 outputs	CJ1W-MD563	A-51

3-4-2 Part Names and Functions

● Eight/sixteen-point Units (18-pin Terminal Blocks)

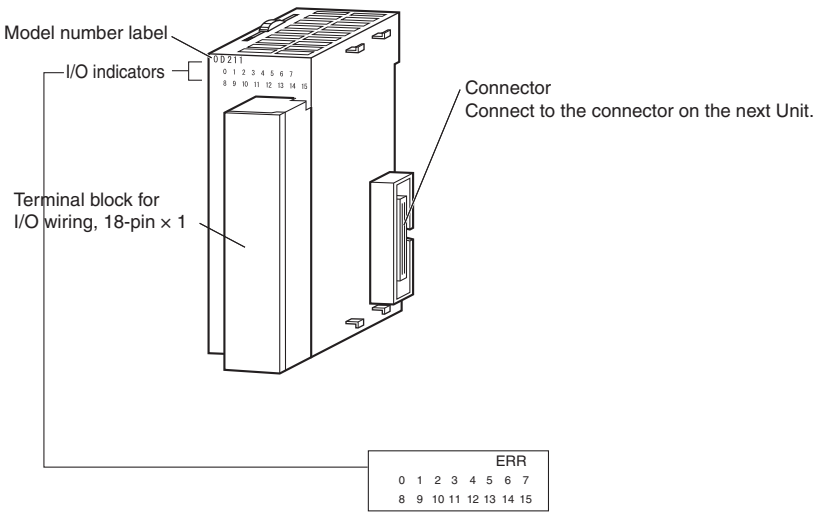

Note The CJ1W-OD202, CJ1W-OD204, and CJ1W-OD212 also have an ERR indicator for the load short-circuit alarm.

● Thirty-two-point Units with 40-pin Fujitsu Connector or MIL Connector

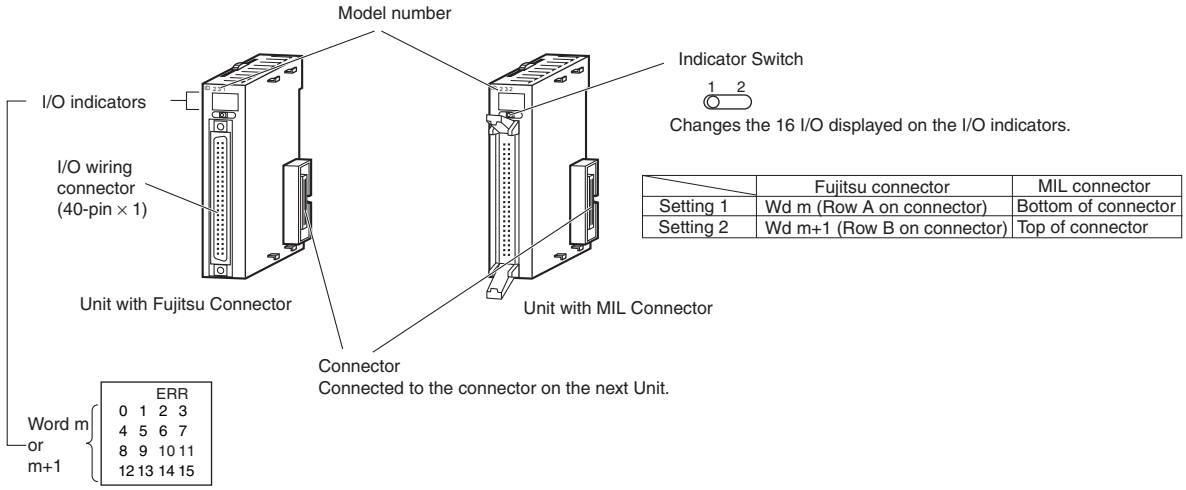

	Fujitsu connector	MIL connector
Setting 1	Wd m (Row A on connector)	Bottom of connector
Setting 2	Wd m+1 (Row B on connector)	Top of connector

Note: Only the CJ1W-OD232 has an ERR indicator for the load short-circuit alarm.

● Thirty-two-point Units with 2 × 24-pin Fujitsu Connectors or 2 × 20-pin MIL Connectors

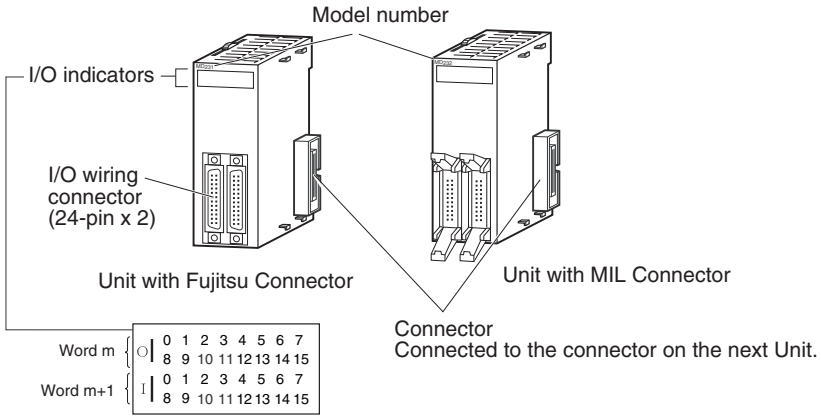

● Sixty-four-point Units with Two 40-pin Fujitsu Connectors or MIL Connectors

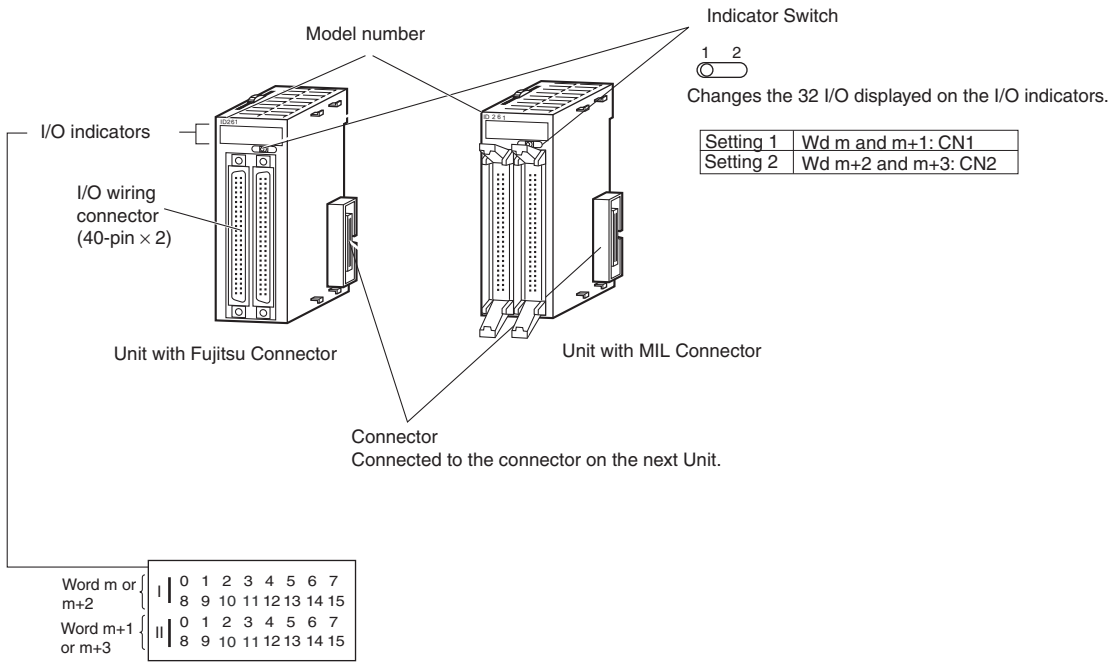

Setting 1	Wd m and m+1: CN1
Setting 2	Wd m+2 and m+3: CN2

Quick-response Inputs

When you want to receive pulses that are shorter than the task period, use the CJ1W-IDP01 Quick-response Input Unit.

The quick-response inputs can receive pulses with a pulse width (ON time) of 0.05 ms for the CJ1W-IDP01 Quick-response Input Unit.

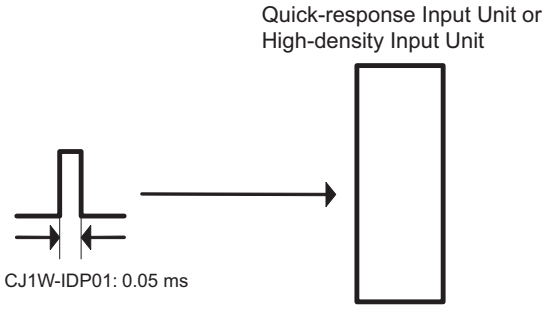

Inputs that are input to internal memory are cleared when the inputs are refreshed.

3-5 B7A Interface Ports

3-5-1 Overview

The B7A is a 1:1 transmission path that does not require a master. A total of 16 signals are transmitted using a two-conductor or three-conductor VCTF cable (maximum length: 500 m). The CJ1W-B7A□□ B7A Interface Unit is a CJ-series Basic I/O Unit that exchanges up to 64 points of I/O data mainly with B7A Link Terminals using a B7A transmission path.

The B7A Interface Unit and B7A Link Terminal can be used in the same way as a standard Basic I/O Unit and I/O Terminal without any need to worry about communications. This characteristic reduces the wiring when using more than one relatively remote sensor or actuator.

3-5-2 System Configuration

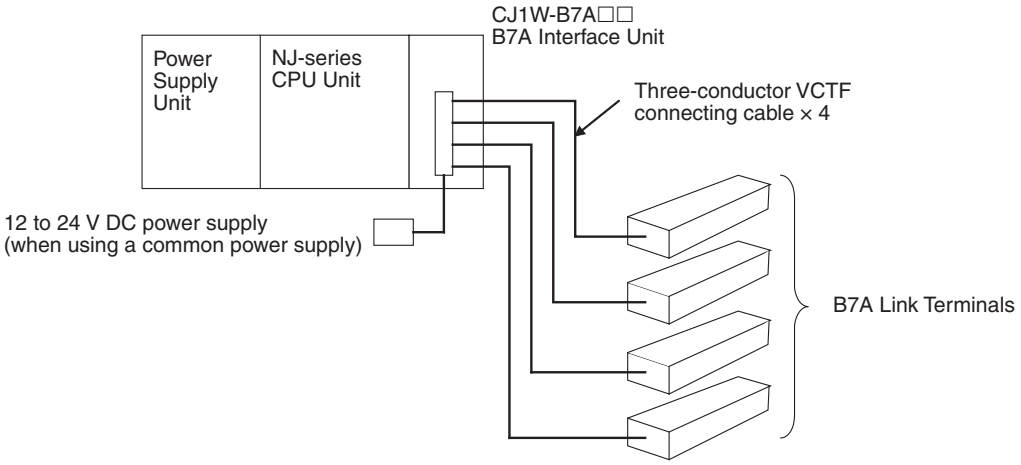

3-5-3 Models

B7A Interface Unit	Specifications	I/O words allocated to Unit	Connectable B7A Link Terminals*
CJ1W-B7A14	64 inputs (four B7A ports)	4 input words	Inputs: Four 16-point Input Terminals, two 32-point Input Terminals, or two 16-point Input Terminals and one 32-point Input Terminal
CJ1W-B7A04	64 outputs (four B7A ports)	4 output words	Outputs: Four 16-point Output Terminals or two 32-point Output Terminals
CJ1W-B7A22	32 inputs, 32 outputs (four B7A ports)	2 input words and 2 output words	Inputs: Two 16-point Input Terminals or one 32-point Input Terminal Outputs: Two 16-point Output Terminals or one 32-point Output Terminal or Two Mixed I/O Terminals (16 inputs/16 outputs)

* A 10-point B7A Link Terminal cannot be connected to a B7A Interface Unit. B7A Interface Units can be connected together.

Additional Information

Wireless transmissions are possible if B7AP Power Couplers are used on a B7A transmission path, reducing the wiring required for moving objects and rotating objects.

3-5-4 B7A Communications Specifications

Item	Specifications		
Transmission method	One-way time-sharing multiplex transmissions		
Transmission delay (communications delay on transmission path)	High-speed	3 ms typical, 5 ms max.	
	Standard	19.2 ms typical, 31 ms max.	
Transmission points	CJ1W-B7A14	64 inputs (4 ports)	
	CJ1W-B7A04	64 outputs (4 ports)	
	CJ1W-B7A22	32 inputs (2 ports), 32 outputs (2 ports)	
External power supply voltage*1	12 to 24 V DC (allowable voltage range: 10.8 to 26.4 V)		
External supply current*2	CJ1W-B7A14	40 mA min.	
	CJ1W-B7A04	150 mA min.	
	CJ1W-B7A22	80 mA min.	
Minimum input time*3	High-speed	16 ms	
	Standard	2.4 ms	
Transmission distance	High-speed	Power supply on one side (common power supply)*4	10 m max.
			50 m max. (with shielded cable)
		Power supply on both sides (separate power supplies)*5	10 m max.
			100 m max. (with shielded cable)
	Standard	Power supply on one side (common power supply)*4	100 m max.
		Power supply on both sides (separate power supplies)*5	500 m max.
Cables	VCTF, 0.75 mm^2, 3 conductors (power supply on one side (common power supply))*4		
	VCTF, 0.75 mm^2, 2 conductors (power supply on both sides (separate power supplies))*5		
	Shielded cable, 0.75 mm^2, 3 conductors (power supply on one side (common power supply))*4		
	Shielded cable, 0.75 mm^2, 2 conductors (power supply on both sides (separate power supplies))*5		

*1 We recommend OMRON S8□□-series Power Supply Units for the external power supplies.

*2 The capacity of the external supply current does not include the capacity required by the B7A Link Terminal.

*3 The minimum input time is the minimum time required by the B7A Interface Unit to read the input signals from the CPU Unit.

*4 When a common power supply is used, the B7A Interface Unit and B7A Link Terminal are supplied by the same external power supply.

*5 When separate power supplies are used, the B7A Interface Unit and B7A Link Terminal are supplied by separate external power supplies.

3-5-5 Common Specifications

Item	Specifications
Applicable Controllers	NJ Series
Unit classification	CJ-series Basic I/O Unit
Transmission delay	Standard (19.2 ms typical) or high-speed (3 ms typical), switchable (Switchable by using the setting switch on the front panel. Settings are read when power is turned ON or Unit is restarted.) Factory setting: Standard (19.2 ms typical) **Note** A transmission error will occur if B7A Link Terminals with different transmission delay times are connected to each other.
Transmission error input bit status processing	HOLD (The bit status from immediately before the transmission error is held.)
Settings	Front panel Setting switch: Standard (19.2 ms typical) or high-speed (3 ms typical), switchable
Indicators	5 LED indicators: RUN (B7A operating status), ERR1 (port 1 communications error), ERR2 (port 2 communications error), ERR3 (port 3 communications error), ERR4 (port 4 communications error)
Front panel connection	Connector with clamps
Current consumption	5 V DC: 70 mA max. (supplied from Power Supply Unit)
Weight	80 g max.

3-5-6 B7A Interface Port I/O Types

The B7A Interface Units are CJ-series Basic I/O Units.

The B7A Interface Ports use the following I/O types.

Access is performed from the user program using variables.

For information on how to allocate variables, refer to the *NJ-series CPU Unit Software User's Manual* (Cat. No. W501).

Port number	I/O type		
	CJ1W-B7A14	CJ1W-B7A04	CJ1W-B7A22
	64-point Input Unit	64-point Output Unit	64-point I/O Unit
1	Inputs	Outputs	Outputs
2	Inputs	Outputs	Outputs
3	Inputs	Outputs	Inputs
4	Inputs	Outputs	Inputs

3-5-7 Parts and Names

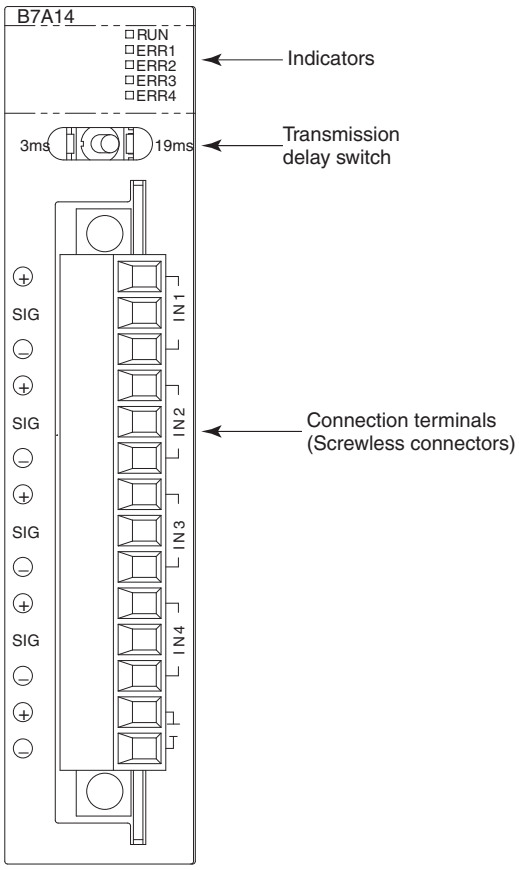

Indicators

● CJ1W-B7A14

Indicator	Name	Color	Status	Condition
RUN	B7A operating status	Green	Lit	The B7A Unit is operating.
			Not lit	The B7A Unit is stopped.
ERR1	Port 1 transmission error	Red	Lit	A transmission error has occurred at port 1 of the B7A Unit.
			Not lit	The Unit is operating normally.
ERR2	Port 2 transmission error	Red	Lit	A transmission error has occurred at port 2 of the B7A Unit.
			Not lit	The Unit is operating normally.

Indicator	Name	Color	Status	Condition
ERR3	Port 3 transmission error	Red	Lit	A transmission error has occurred at port 3 of the B7A Unit.
			Not lit	The Unit is operating normally.
ERR4	Port 4 transmission error	Red	Lit	A transmission error has occurred at port 4 of the B7A Unit.
			Not lit	The Unit is operating normally.

● CJ1W-B7A04

Indicator	Name	Color	Status	Condition
RUN	B7A operating status	Green	Lit	The B7A Unit is operating.
			Not lit	The B7A Unit is stopped.

● CJ1W-B7A22

Indicator	Name	Color	Status	Condition
RUN	B7A operating status	Green	Lit	The B7A Unit is operating.
			Not lit	The B7A Unit is stopped.
ERR1	Port 3 transmission error	Red	Lit	A transmission error has occurred at port 3 of the B7A Unit.
			Not lit	The Unit is operating normally.
ERR2	Port 4 transmission error	Red	Lit	A transmission error has occurred at port 4 of the B7A Unit.
			Not lit	The Unit is operating normally.

Transmission Delay Switch

Name	Function	Factory setting
Transmission delay switch	The same baud rate is set for all ports using this one switch. Right: Standard (19.2 ms typical) Left: High-speed (3 ms typical)	Standard

Note The switch setting is read when the power supply is turned ON. If the switch setting is changed after turning ON the power supply, the new setting is not used.

3-5-8 Transmission Error Processing

B7A Interface Input Ports

The B7A Interface Unit detects transmission errors at the input ports. When a transmission error is detected at an input port, the corresponding indicator and Transmission Error Flag turn ON.

● Indicators

When transmission errors occur at B7A interface input ports, the ERR1 to ERR4 indicators on the front panel will turn ON according to the port where the error occurred.

Port where error occurred	LED error indicators		
	CJ1W-B7A14	CJ1W-B7A04	CJ1W-B7A22
Port 1	ERR1	---	---
Port 2	ERR2	---	---
Port 3	ERR3	---	ERR1
Port 4	ERR4	---	ERR2

● Transmission Error Notification Variables

The following bits in the Basic I/O Unit Information system-defined variables that are allocated to the I/O ports of the Units will change to TRUE when a transmission error occurs.

Example: Rack 0, Slot 0

B7A interface port	CJ1W-B7A14	CJ1W-B7A04	CJ1W-B7A22
Port 1	_CJB_IOUnitInfo[0, 0, 0]	---	---
Port 2	_CJB_IOUnitInfo[0, 0, 1]	---	---
Port 3	_CJB_IOUnitInfo[0, 0, 2]	---	_CJB_IOUnitInfo[0, 0, 0]
Port 4	_CJB_IOUnitInfo[0, 0, 3]	---	_CJB_IOUnitInfo[0, 0, 1]

Example: Rack 0, Slot 1

B7A interface port	CJ1W-B7A14	CJ1W-B7A04	CJ1W-B7A22
Port 1	_CJB_IOUnitInfo[0, 1, 0]	---	---
Port 2	_CJB_IOUnitInfo[0, 1, 1]	---	---
Port 3	_CJB_IOUnitInfo[0, 1, 2]	---	_CJB_IOUnitInfo[0, 0, 0]
Port 4	_CJB_IOUnitInfo[0, 1, 3]	---	_CJB_IOUnitInfo[0, 0, 1]

● Transmission Error Input Status Processing

If a transmission error occurs at an input port, the status of the input bit in the CPU Unit variable from immediately before the transmission error is held. When transmission returns to normal, the signals that have been normally received will be input to the input bit.

B7A Interface Output Ports

The B7A Interface Unit does not detect transmission errors at output ports. Detect output port transmission errors at the B7A Link Terminal that is connected to the B7A Interface Unit.

3-6 CJ-series I/O Control Units and I/O Interface Units

An I/O Control Unit and I/O Interface Units are used to connect Expansion Racks to the NJ-series CPU Rack to expand the system.

3-6-1 Models and Specifications

● I/O Control Unit

Model	Specifications
CJ1W-IC101	The I/O Control Unit is required to connect a CJ-series Expansion Rack to an NJ-series CPU Rack. The I/O Control Unit must be connected immediately to the right of the CPU Unit. Connect to the I/O Interface Unit (CJ1W-II101) on the first Expansion Rack with a CS/CJ-series I/O Connecting Cable.

● I/O Interface Unit

Model	Specifications
CJ1W-II101	One Interface Unit is required for each CJ-series Expansion Rack. One End Cover is provided with each Unit.

3-6-2 Component and Functions

CJ1W-IC101
I/O Control Unit

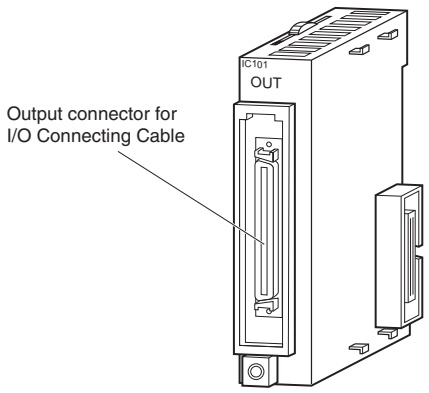

CJ1W-II101
I/O Interface Unit

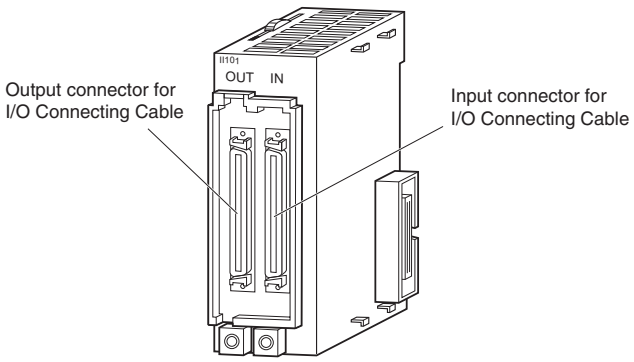

Precautions for Correct Use

Attach the enclosed cover to the I/O Connecting Cable connector on the I/O Interface Unit when it is not being used to protect it from dust.

3-7 Sysmac Studio

The Sysmac Studio is a Support Software package that provides an integrated development environment to design, program, debug, and maintain SYSMAC NJ-series Controllers.

3-7-1 Model Numbers

The model numbers of the Sysmac Studio Standard Edition are given in the following table. The model numbers are different for the media and licenses.

Product	Configuration software	Media	Number of user licenses	Model
Sysmac Studio Standard Edition	• Sysmac Studio The following Support Software is also included. • Network Configurator • CX-Integrator • CX-Protocol • CX-Designer	DVD	---	SYSMAC-SE200D
		Licenses	1	SYSMAC-SE201L
			3	SYSMAC-SE203L
			10	SYSMAC-SE210L

3-7-2 Connection

With an NJ-series CPU Unit, you can connect the Sysmac Studio online in the following ways.

Configuration

● Connecting by USB

- Direct Connection

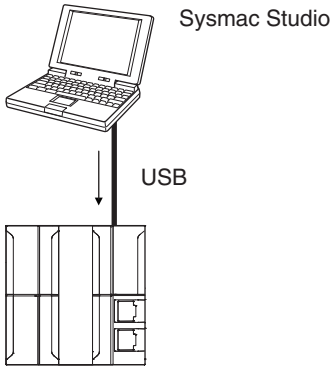

The connection device does not need to be specified.

- Connection to CPU Unit on EtherNet/IP with USB

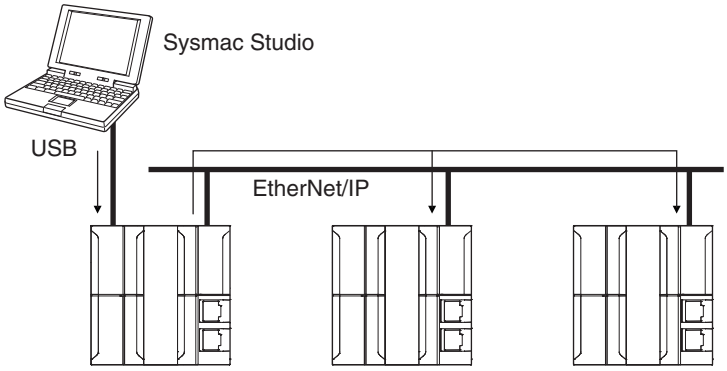

Directly specify the IP address of the remote device or select the remote device from the node list.

● Connection with EtherNet/IP

- 1:1 Connection

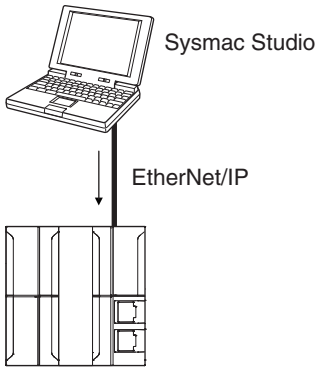

- A direct connection is made from the Sysmac Studio. The IP address and connection device do not need to be specified.
- You can make the connection whether or not a switching hub is used.
- Support for Auto-MDI enables the use of cross cables or straight cables if a direct connection is made.

- 1:N Connection

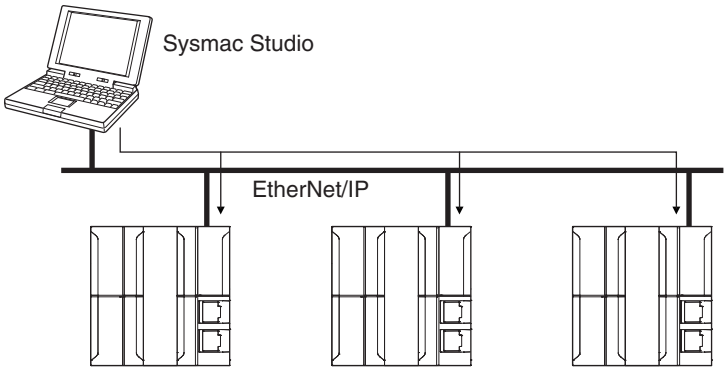

Directly specify the IP address of the remote device or select the remote device from the node list.

Additional Information

The Sysmac Studio cannot connect online to an NJ-series CPU Unit in the following type of configuration.

- If the built-in EtherNet/IP port is not used, you cannot connect to an NJ-series CPU Unit on an EtherNet/IP network.

Example: Connection through an EtherNet/IP Unit

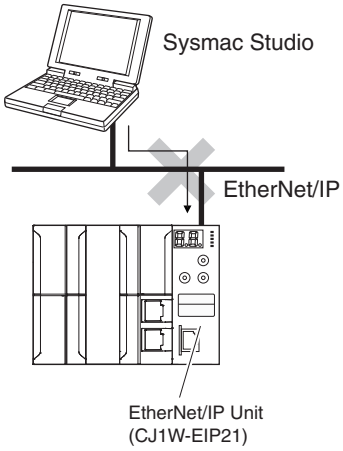

Example: Connection to NJ-series CPU Unit Routing through an EtherNet/IP Unit or Built-in Port

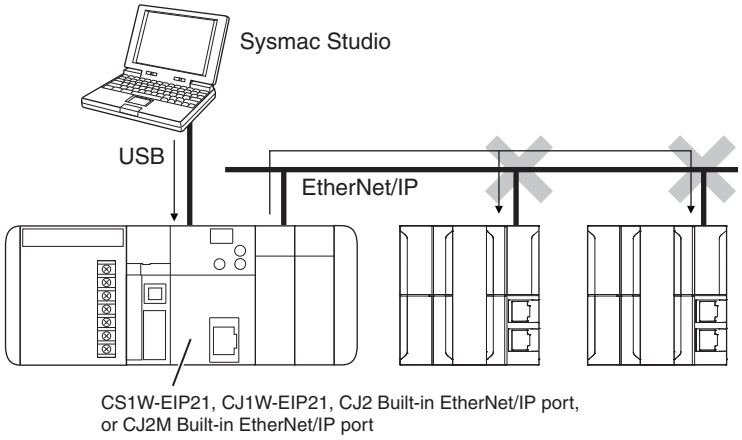

- You cannot route through any networks other than EtherNet/IP networks.

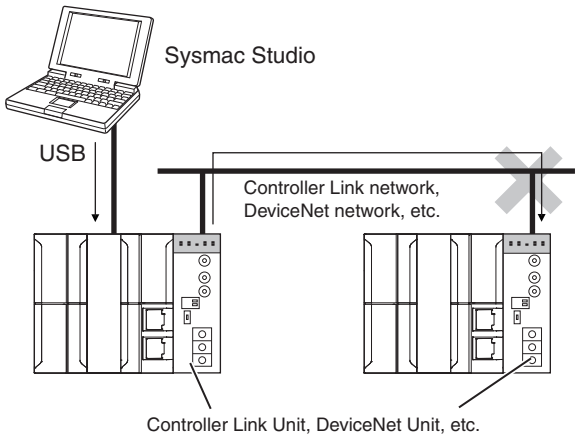

4

Installation and Wiring

This section describes how to install and wire the CPU Unit and Configuration Units.

4-1 Processing at Power ON and Power OFF 4-2
- 4-1-1 Power ON Operation 4-2
- 4-1-2 Power OFF Operation 4-3
- 4-1-3 Resetting the Controller from the Sysmac Studio 4-5

4-2 Fail-safe Circuits 4-6
- 4-2-1 Order of Powering Up the Controller and Controlled System 4-7

4-3 Mounting Units 4-9
- 4-3-1 Installation in a Control Panel 4-9
- 4-3-2 Connecting Controller Components 4-14
- 4-3-3 DIN Track Installation 4-16
- 4-3-4 Connecting CJ-series Expansion Racks 4-19
- 4-3-5 Assembled Appearance and Dimensions 4-21

4-4 Wiring 4-26
- 4-4-1 Power Supply Wiring 4-26
- 4-4-2 Wiring the Built-in EtherCAT Port 4-31
- 4-4-3 Wiring CJ-series Basic I/O Units with Terminal Blocks 4-31
- 4-4-4 Wiring CJ-series Basic I/O Units with Connectors 4-33
- 4-4-5 Connecting to Connector-Terminal Block Conversion Units or I/O Relay Terminals 4-38
- 4-4-6 Connecting I/O Devices 4-39
- 4-4-7 Wiring the Built-in EtherCAT Port 4-42
- 4-4-8 Wiring B7A Interface Units 4-43

4-5 Control Panel Installation 4-49
- 4-5-1 Temperature 4-49
- 4-5-2 Humidity 4-51
- 4-5-3 Vibration and Shock 4-51
- 4-5-4 Atmosphere 4-51
- 4-5-5 Electrical Environment 4-52
- 4-5-6 Grounding 4-56

4-1 Processing at Power ON and Power OFF

WARNING

- Do not touch the terminal section while power is ON. Electrical shock may occur.
- Do not disassemble any of the Units. Particularly the Power Supply Units contain parts with high voltages when power is ON or immediately after power is turned OFF. Electrical shock may occur. There are also sharp internal parts that may cause injury.

4-1-1 Power ON Operation

Precautions for Safe Use

It takes approximately 10 to 20 s to enter RUN mode after the power supply is turned ON. The outputs during this period will behave according to the slave and Unit specifications. Use the RUN output on the Power Supply Unit, for example, to implement fail-safe circuits so that external devices do not operate incorrectly.

Operation until Operation Ready Status

The CPU Unit will enter operation-ready status after the following time elapses once power supply to the Power Supply Unit starts.

The RUN indicator will flash at a 1-s interval until operation-ready status is entered. (During that time, the Controller will be in startup status.)

CPU Unit Startup Time at Power ON

It takes approximately 10 to 20 seconds for the CPU Unit to start up. The startup time depends on the slave/Unit configuration,*1 user program, SD Memory Card usage, SD Memory Card self-diagnosis usage,*2 etc.

*1 Some EtherCAT slaves can set a maximum standby time of 30 to 200 s. For the CPU Unit, however, operation-ready status exists as soon as the EtherCAT Master Function Module is functioning, regardless of the standby time of the EtherCAT Slaves. For the EtherCAT Master Function Module, slaves that do not start within the maximum waiting time are treated as having an error.

*2 This function performs self-diagnosis on the inserted SD Memory Card.
This is executed if the SD Memory Card self-diagnosis setting is set to enable execution of self-diagnosis in the Operation Settings in the Controller Configurations and Setup in the Sysmac Studio.

Additional Information

The CPU Unit internally performs initialization when the power to the Controller is turned ON. The following processing is performed for initialization.

Process	Description
Self diagnosis at startup	Operation is monitored for the following errors: Power Supply Error, CPU Unit Reset, CPU Unit Watchdog Timer Error, and Incorrect Power Supply Unit Connected. *
Data check	The *_RetainFail* (Retention Failure Flag) system-defined variable changes to TRUE at the following time: when the values of variables for which the Retain attribute was set to retain the values and the values in DM, EM, and HR Areas in the memory used for CJ-series Units were not retained after a power interruption.
Detecting CJ-series Units	The CJ-series Units mounted in the Controller are detected.
Recording Power Turned ON and Power Interrupted events	The Power Turned ON and Power Interrupted events are recorded.

* Refer to *5-1-2 Fatal Errors in the CPU Unit* on page 5-3 for information on the following errors: Power Supply Error, CPU Unit Reset, CPU Unit Watchdog Timer Error, and Incorrect Power Supply Unit Connected.

Operating Mode at Startup

The system will immediately enter RUN mode if RUN mode (default) is set as the startup operating mode. The system will immediately enter PROGRAM mode if PROGRAM mode is set as the startup operating mode.

• RUN Mode Set as Startup Mode

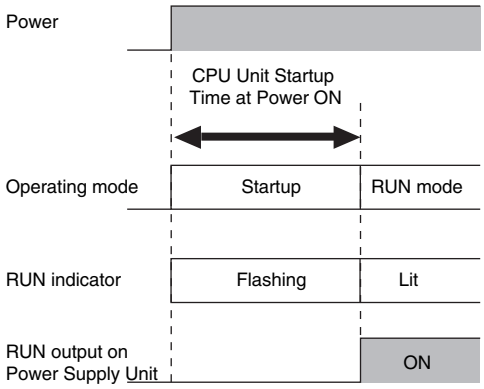

• PROGRAM Mode Set as Startup Mode

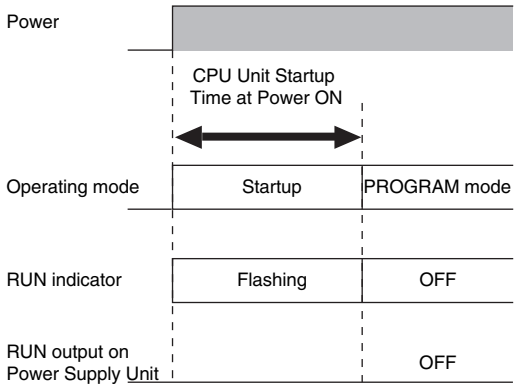

4-1-2 Power OFF Operation

WARNING

The NJ-series Controller continues normal operation for a specific period of time even when a momentary power interruption occurs. The Controller may therefore receive incorrect signals from external devices that are affected by the momentary power interruption.
Take suitable actions, such as external fail-safe measures and interlock conditions, to monitor the power supply voltage of the external devices as required.

Different operations will be performed when the power is turned OFF depending on whether the power interruption time is longer than the power OFF detection time, as described below.

The following table gives the voltage conditions for a power interruption.

Power Supply Unit model	Power supply input	Power interruption voltage
NJ-PA3001	100 to 200 VAC	85 VAC max.
NJ-PD3001	24 VDC	19.2 VDC max.

The setting ranges for the power OFF detection time are given in the following table.

Power supply type	Power OFF detection time
AC power supply	30.5 to 45.5 ms
DC power supply	22.5 to 25.5 ms

Operation at Power OFF Operation

Execution of the user program is ended if a power interruption exceeds the power OFF detection time, as shown below. The processing after power interruption confirmation (described below) is performed, and then the system (i.e., CPU Unit) stops.

Power supply type	Time required for a power interruption
AC power supply	50.5 ms or longer
DC power supply	25.5 ms or longer

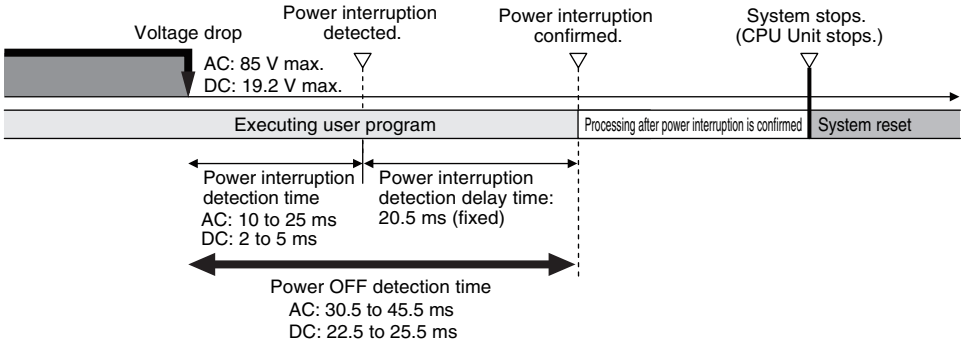

As shown in the following figure, the system (i.e. CPU Unit) will stop even if the voltage recovers after the power interruption detection time.

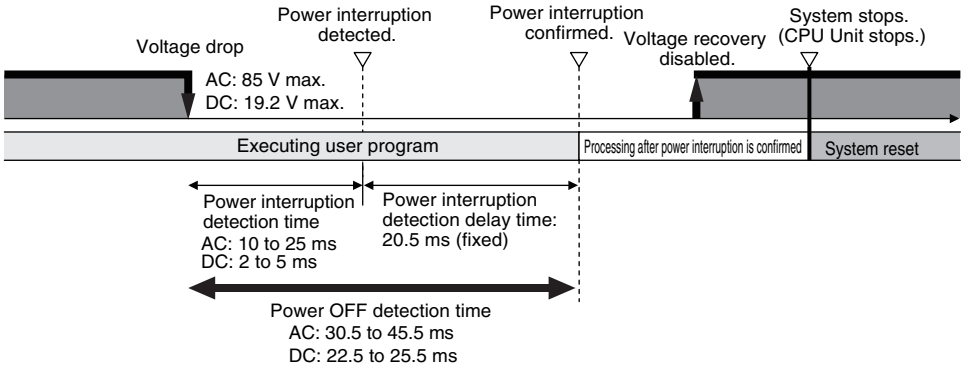

Power interruption detection time: The time from when the input power supply voltage drops until a power interruption is detected. The power interruption is detected by the Power Supply Unit.

Power interruption detection delay time: The standby time from when the Power Supply Unit detects the power interruption until the CPU Unit starts processing after the power interruption is confirmed.

Power OFF detection time: The time from when the power supply voltage drops until the CPU Unit starts processing after the power interruption is confirmed. The CPU Unit continues to operate normally until the power interruption is confirmed.

Momentary Power Interruption with Continued Operation

Execution of the user program will continue if a momentary power interruption is less than the following times.

Power supply type	Momentary power interruption time with continued operation
AC power supply	30.5 ms max.
DC power supply	22.5 ms max.

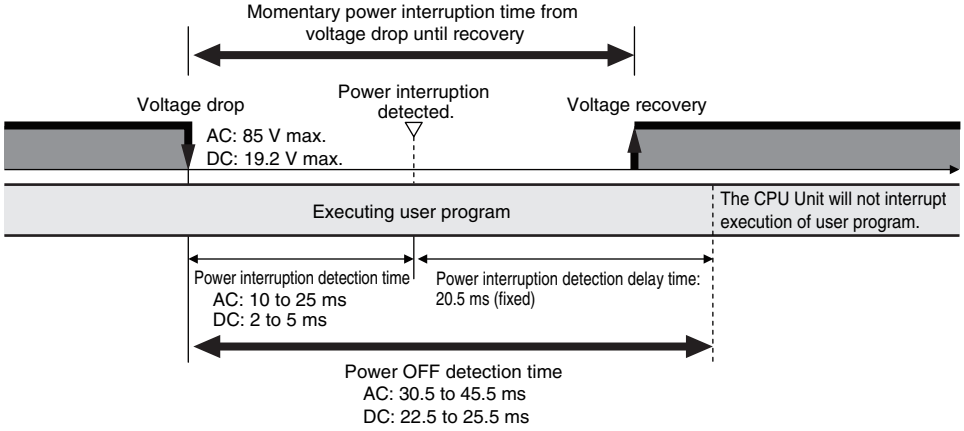

Processing after Power Interruption Is Confirmed

After a power interruption is confirmed, the CPU Unit performs the following processing and then stops.

Item		Description
I/O refresh		Load outputs are turned OFF. Tag data links stop.
Processing	SD Memory Card access in progress	Any writing is interrupted, files are closed, and the Card is unmounted.
	Transferring user program (including online editing)	Interrupted. As a result, an error will occur the next time that the power is turned ON. The Controller will not operate.
	User program execution	User program execution is aborted even during execution of an instruction.
Saving event log		The time that a power interruption occurs and the cause (primary power interruption of Power Supply Unit) of the interruption are recorded.

4-1-3 Resetting the Controller from the Sysmac Studio

You can reset the CPU Unit from the Sysmac Studio.
A reset from the Sysmac Studio performs the same operation as cycling the power supply of the Power Supply Unit. Resetting is possible, however, only when the CPU Unit is in PROGRAM mode.
Confirm the following status before resetting the CPU Unit.

- Check the status of output loads.
- Make sure that SD Memory Card access is not in progress.

4-2 Fail-safe Circuits

WARNING

Provide safety measures in external circuits, including the following items, to ensure safety in the system if an abnormality occurs due to malfunction of the CPU Unit, other Units, or slaves or due to other external factors affecting operation. Not doing so may result in serious accidents due to incorrect operation.

- Emergency stop circuits, interlock circuits, limit circuits, and similar safety measures must be provided in external control circuits.
- The Controller outputs may remain ON or OFF due to deposition or burning of the output relays or destruction of the output transistors. As a countermeasure for such problems, external safety measures must be provided to ensure safe operation of the system.
- The CPU Unit will turn OFF all outputs from Basic Output Units in the following cases. The remote I/O slaves will operate according to the settings in the slaves.
  - If a power supply error occurs.
  - When an Incorrect Power Supply Unit Connected error occurs.
  - When a CPU watchdog timer error or CPU reset occurs
  - When a Controller error in the major fault level occurs.
  - While the CPU Unit is startup status until RUN mode is entered after the power is turned ON.

  External safety measures must be provided to ensure safe operation of the system in such cases.
- If external power supplies for slaves or other devices are overloaded or short-circuited, the voltage will drop, outputs will turn OFF, and the system may be unable to read inputs. Provide external safety measures in control with monitoring of external power supply voltage as required so that the system operates safely in such a case.
- Unintended outputs may be performed when an error occurs in variable memory or memory for CJ-series Units. As a countermeasure for such problems, external safety measures must be provided to ensure safe operation of the system.
- Provide measures in the communications system and in the user program to ensure safety in the overall system even if errors or malfunctions occur in data link communications or remote I/O communications.
- If a communications interference occurs for remote I/O or if a major fault level error occurs, output status will be determined by the specifications of the external output device. Confirm the operating specifications for communications errors and major fault level errors and implement suitable safety measures. Correctly set all of the settings in the slaves and Units.
- You must implement fail-safe circuits to provide sufficient protection in the event that abnormal signals occur as the result of broken signal lines or momentary power interruptions. Not doing so may result in serious accidents due to incorrect operation.

4-2-1 Order of Powering Up the Controller and Controlled System

Outputs from Units, such as DC Output Units, may malfunction momentarily when the power to the Controller is turned ON. This may cause problems in the system if the Controller power supply is turned ON after the controlled system's power supply. To prevent possible malfunctions, add an external circuit that prevents the power supply to the controlled system from going ON before the power supply to the Controller itself.

Precautions for Safe Use

It takes approximately 10 to 20 s to enter RUN mode after the power supply is turned ON. During that time, outputs will be OFF or the values will be according to settings in the Units or slaves. Also, external communications cannot be performed. Use the RUN output on the Power Supply Unit, for example, to implement fail-safe circuits so that external devices do not operate incorrectly.

Output Unit Failure

It is possible for an output to remain ON due to a malfunction in the internal circuitry of the Output Unit, such as a relay or transistor malfunction. Be sure to add any circuits necessary outside of the Controller to ensure the safety of the system in the event that an output fails to go OFF.

Power Supply Wiring and Emergency Stop Circuit

The following emergency stop circuit controls the power supply to the controlled system so that power is supplied to the controlled system only when the Controller is operating and the RUN output is ON. An external relay (CR1) is connected to the RUN output from the Power Supply Unit* as shown in the following diagram.

* A RUN output is provided only on the NJ-PA3001/-PD3001 Power Supply Unit.

● Electrical Diagram

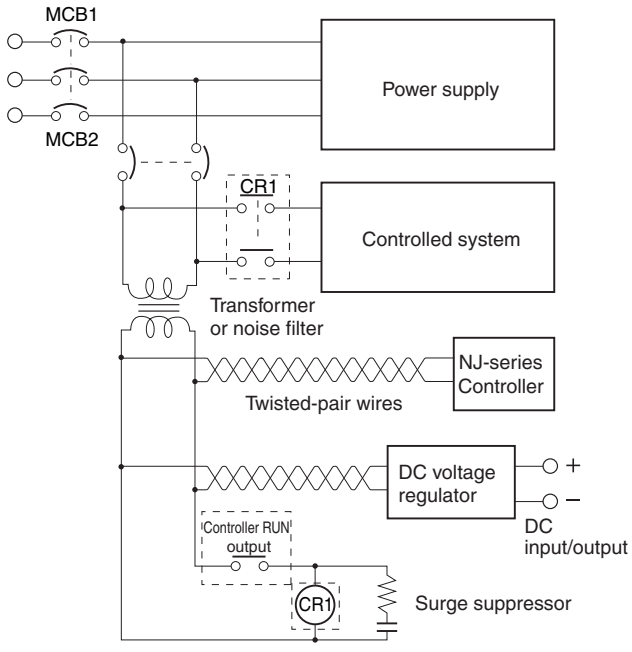

Interlock Circuits

When the Controller controls an operation such as the clockwise and counterclockwise operation of a motor, provide an external interlock such as the one shown in the following example to prevent both the forward and reverse outputs from turning ON at the same time if required by the application.

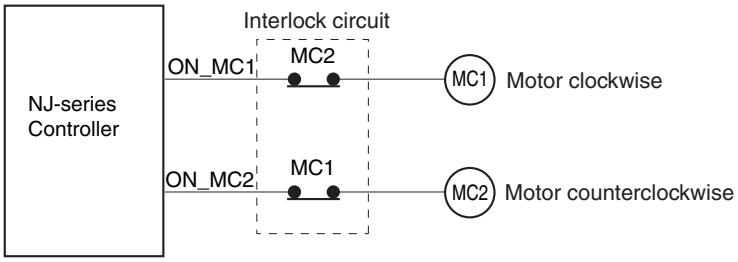

This circuit prevents outputs MC1 and MC2 from both being ON at the same time even if both Controller outputs ON_MC1 and ON_MC2 are ON due to a malfunction.

4-3 Mounting Units

Precautions for Correct Use

- Follow the instructions in this manual to correctly perform installation.
- Do not operate or store the Controller in the following locations. Doing so may cause operation to stop or incorrect operation.
  - Locations subject to direct sunlight.
  - Locations subject to temperatures or humidity outside the range specified in the specifications.
  - Locations subject to condensation as the result of severe changes in temperature.
  - Locations subject to corrosive or flammable gases.
  - Locations subject to dirt, dust, salt, and metal powder.
  - Locations subject to exposure to water, oil, or chemicals.
  - Locations subject to shock or vibration.
- Take appropriate and sufficient countermeasures when installing systems in the following locations:
  - Locations subject to strong, high-frequency noise.
  - Locations subject to static electricity or other forms of noise.
  - Locations subject to strong electromagnetic fields.
  - Locations subject to possible exposure to radioactivity.
  - Locations close to power supplies.

4-3-1 Installation in a Control Panel

Installation in Cabinets or Control Panels

When the Controller is being installed in a cabinet or control panel, be sure to provide proper ambient conditions as well as access for operation and maintenance.

● Temperature Control

The ambient temperature within the enclosure must be within the operating range of 0 to 55°C. When necessary, take the following steps to maintain the proper temperature.

- Provide enough space for good air flow.
- Do not install the Controller directly above equipment that generates a large amount of heat such as heaters, transformers, or high-capacity resistors.
- If the ambient temperature exceeds 55°C, install a cooling fan or air conditioner.

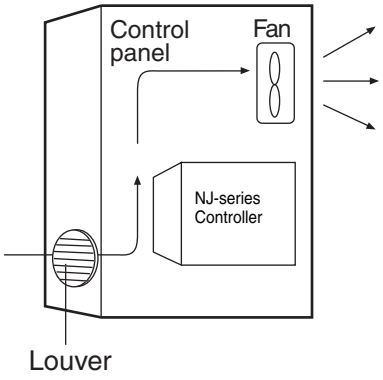

Accessibility for Operation and Maintenance

- To ensure safe access for operation and maintenance, separate the Controller as much as possible from high-voltage equipment and power machinery.
- It will be easy to operate the Controller if it is mounted at a height of 1.0 to 1.6 m above the floor.

Improving Noise Resistance

- Do not mount the Controller in a control panel containing high-voltage equipment.
- Install the Controller at least 200 mm away from power lines.

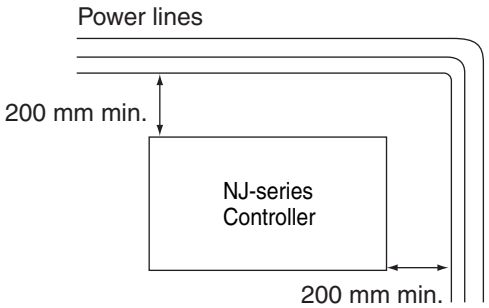

- Ground the mounting plate between the Controller and the mounting surface.
- When I/O Connecting Cables are 10 m or longer, connect the control panels in which Racks are mounted with heavier power wires (3 wires at least 2 mm^2 in cross-sectional area).

Controller Orientation

- Each Rack must be mounted in an upright position to provide proper cooling.

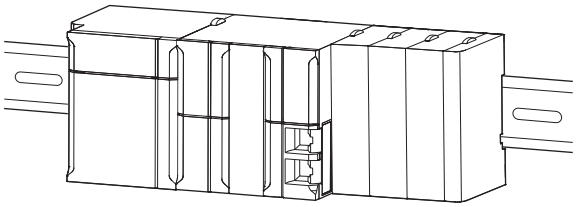

- Do not install a Rack in any of the following positions.

Mounting with the DIN Track on the Bottom

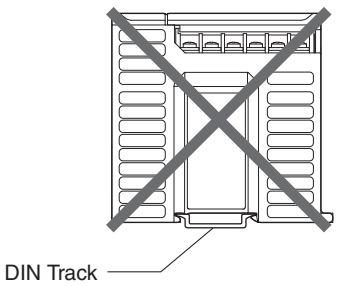

Mounting with the DIN Track on the Top

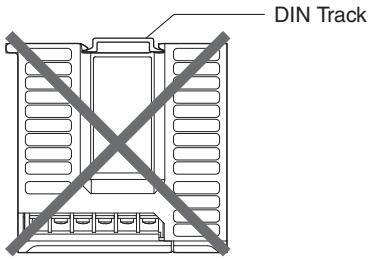

Mounting with the Rack Upside down

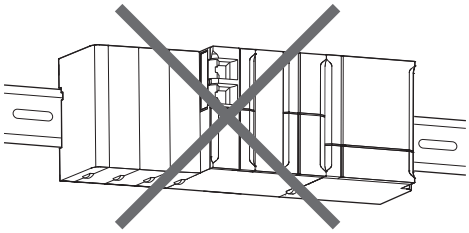

Mounting with the DIN Track Installed Vertically

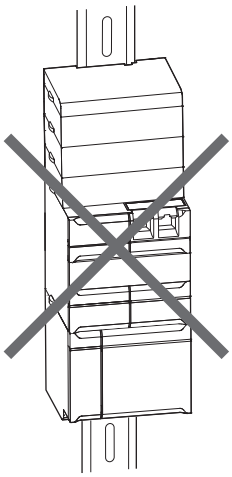

Installation Method in Control Panels

An NJ-series Controller must be mounted inside a control panel on DIN Track. Normally the CPU Rack is installed on top and the Expansion Racks under it.

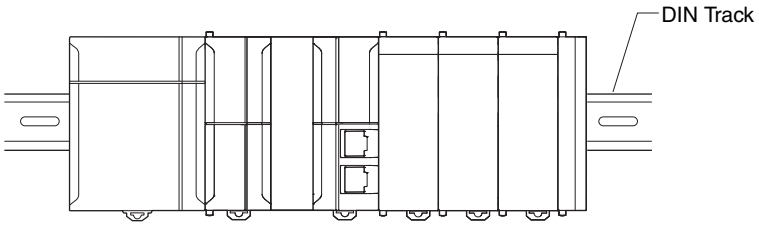

- Consider the width of wiring ducts, wiring, ventilation, and Unit replacement when determining the space between Racks.
- When you install Racks vertically, allow at least 66 mm between any two adjacent Racks.

Additional Information

A Controller must be mounted on DIN Track. It cannot be mounted with screws.

- Wiring Ducts
  Whenever possible, route I/O wiring through wiring ducts or raceways. Install mounting bracket so that it is easy to fish wire from the I/O Units through the duct. It is handy to have the duct at the same height as the Racks.

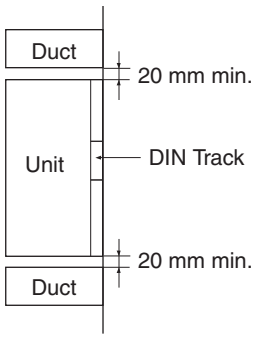

● Wiring Duct Example

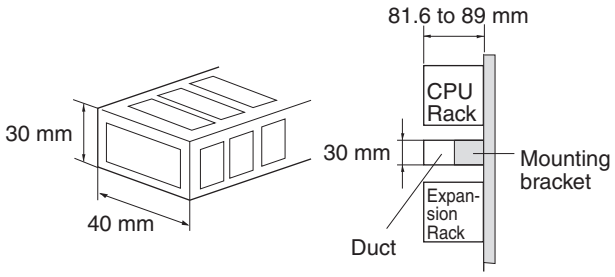

Precautions for Correct Use

Tighten terminal block screws and cable screws to the following torques.

Terminal Screws
M4: 1.2 N·m
M3: 0.5 N·m

Cable Connector Screws
M2.6: 0.2 N·m

Routing Wiring Ducts

Install the wiring ducts at least 20 mm away from the tops of the Racks and any other objects (e.g., ceiling, wiring ducts, structural supports, devices, etc.) to provide enough space for air circulation and replacement of Units.

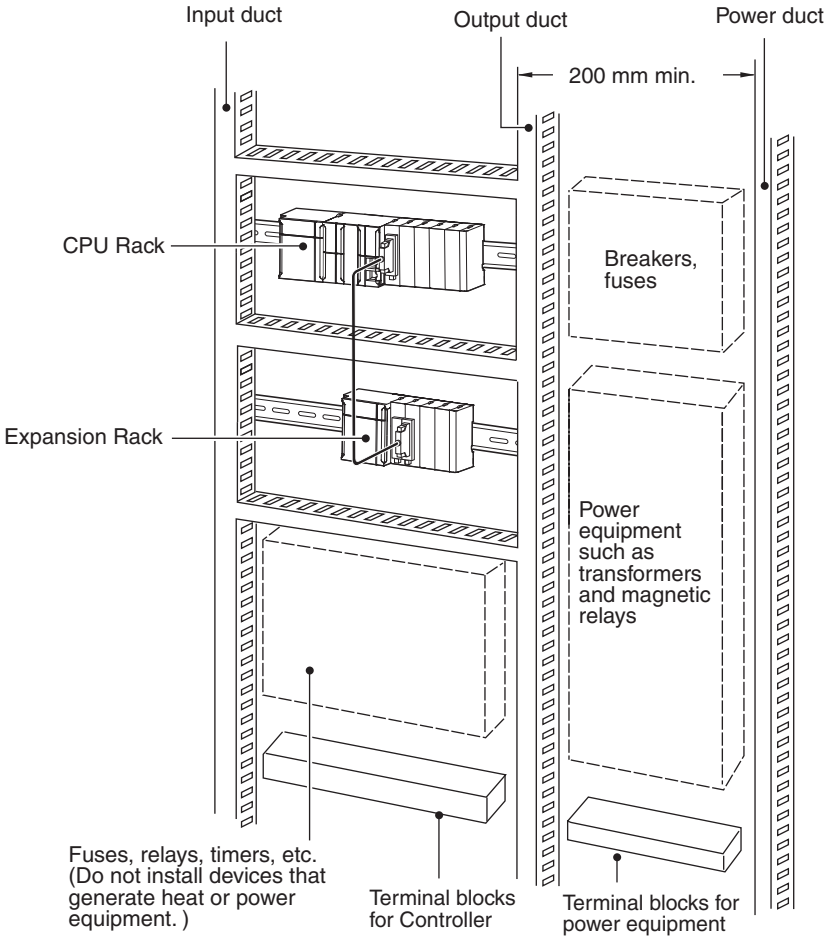

4-3-2 Connecting Controller Components

The Units that make up an NJ-series Controller can be connected simply by pressing the Units together and locking the sliders by moving them toward the back of the Units. The End Cover is connected in the same way to the Unit on the far right side of the Controller.

1 Join the Units so that the connectors fit exactly.

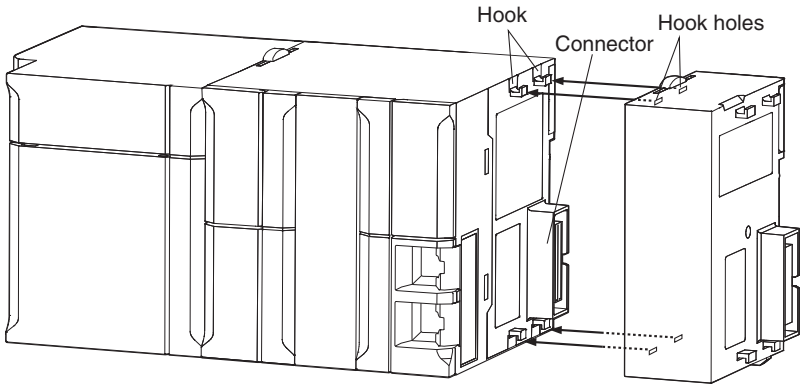

2 The yellow sliders at the top and bottom of each Unit lock the Units together. Move the sliders toward the back of the Units as shown below until they click into place.

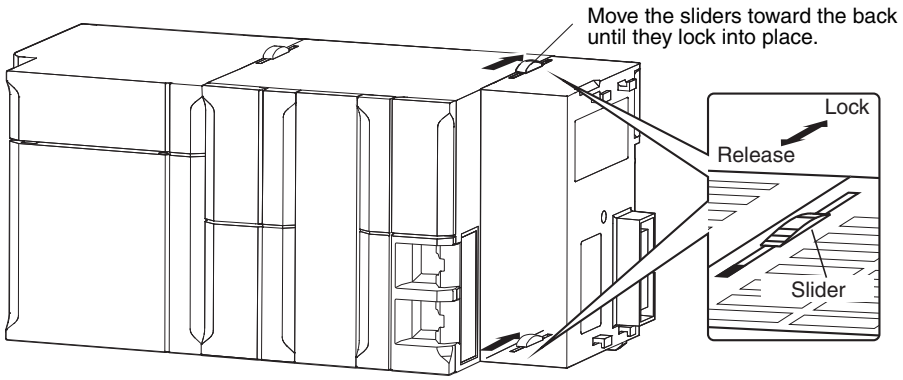

Precautions for Correct Use

The sliders on the tops and bottoms of the Power Supply Unit, CPU Unit, I/O Units, Special I/O Units, and CPU Bus Units must be completely locked (until they click into place) after connecting the adjacent Unit connectors.

3 Attach the End Cover to the Unit on the far right side of the Rack.

CPU Rack

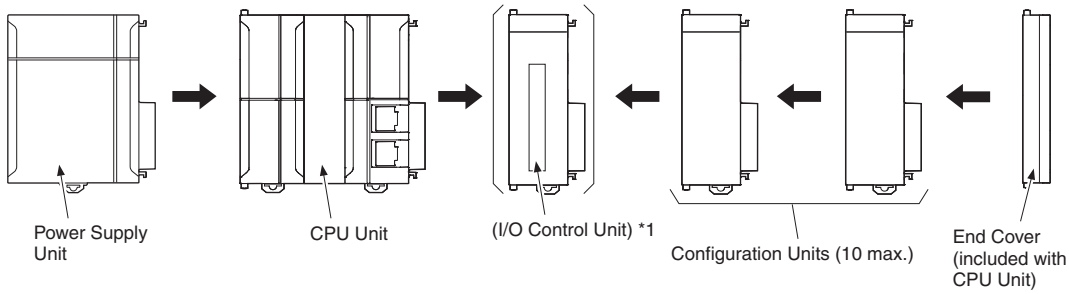

*1: Connect the I/O Control Unit directly to the CPU Unit to enable connecting Expansion Racks.

Expansion Rack

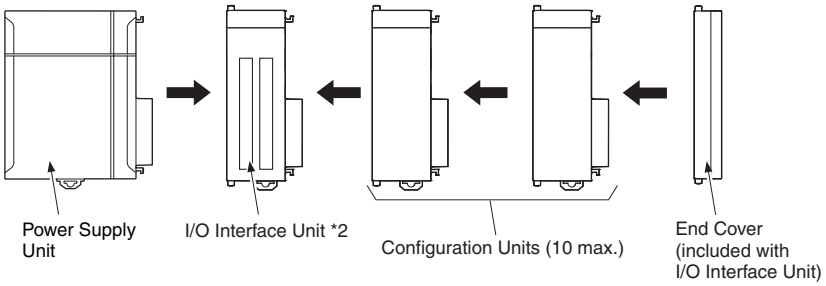

*2: Connect the I/O Interface Unit directly to the Power Supply Unit.

Additional Information

There is no Backplane for the NJ-series. The Controller is constructed by connecting Units together using the connectors on the sides.

Precautions for Correct Use

- Always turn OFF the power supply before connecting Units to each other.
- Always turn OFF the power supply to the entire system before replacing a Unit.
- A maximum of 10 Units can be connected in any one CPU Rack or Expansion Rack. If you connect more than that number, an Incorrect Unit/Expansion Rack Connection error (a major fault level Controller error) will occur, and the NJ-series CPU Unit will not operate.

4-3-3 DIN Track Installation

Use the following procedure to install an NJ-series Controller on DIN Track.

1 Release the pins on the backs of the NJ-series Units.

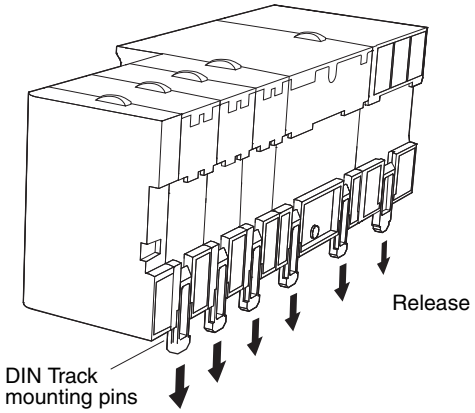

2 Fit the back of the Controller onto the DIN Track by inserting the top of the track and then pressing in at the bottom of the Controller, as shown below.

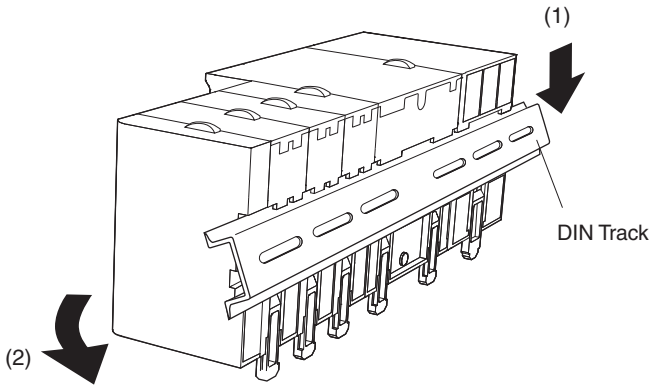

3 Lock the pins.

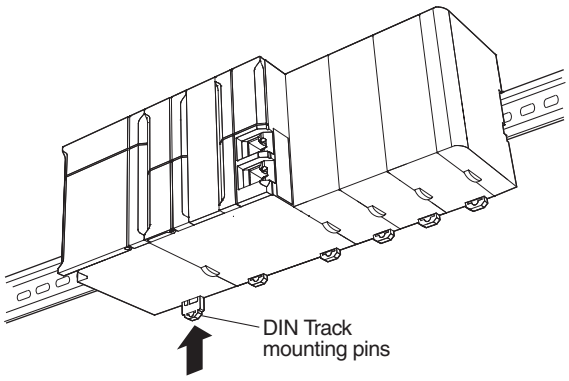

4 Install a DIN Track End Plate on each end of the Controller. To install an End Plate, hook the bottom on the bottom of the track, rotate the Plate to hook the top of the Plate on the top of the track, and then tighten the screw to lock the Plate in place.

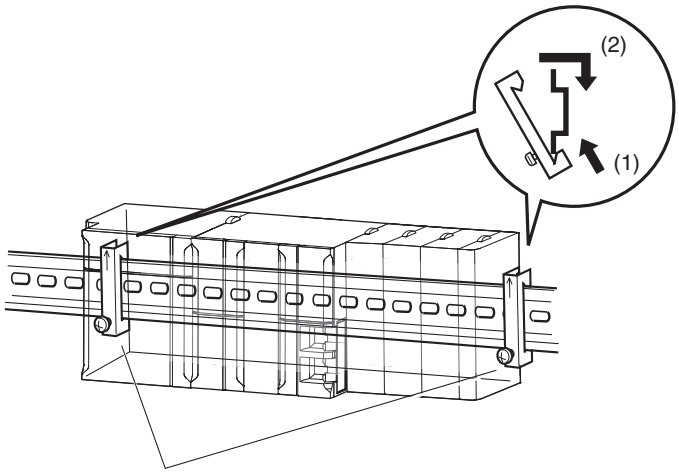

Additional Information

To remove Units, perform the steps above in reverse order.

Precautions for Safe Use

Always turn OFF the power supply to the Controller before attempting any of the following.

- Mounting or removing I/O Units or CPU Units
- Assembling the Units.
- Setting DIP switches or rotary switches.
- Connecting cables or wiring the system.
- Connecting or disconnecting the connectors.

The Power Supply Unit continues to supply power to the Controller for up to several seconds after the power supply is turned OFF. The PWR indicator remains lit as long as power is supplied. Make sure that the PWR indicator is not lit before you perform any of the above operations.

DIN Track and Accessories

Use the DIN Track and DIN Track End Plates shown below. Secure each DIN Track inside a control panel with at least three screws.

- DIN Track
  Model numbers: PFP-50N (50 cm), PFP-100N (100 cm), PFP-100N2 (100 cm)

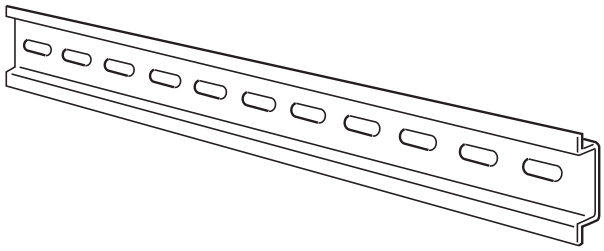

Secure the DIN Track to the control panel using M4 screws separated by 210 mm (6 holes) or less and using at least 3 screws. The tightening torque is 1.2 N·m.

PFP-100N2 DIN Track

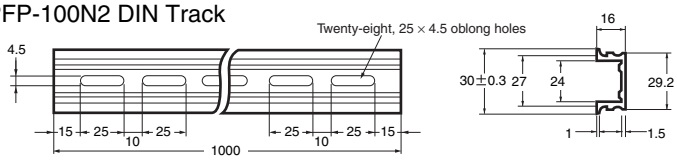

PFP-100N/50N DIN Track

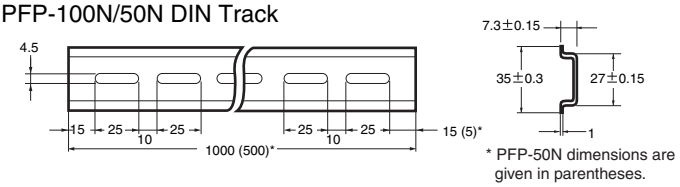

* PFP-50N dimensions are given in parentheses.

- PFP-M DIN Track End Plates (2 required)

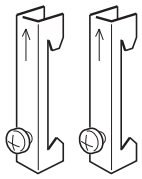

4-3-4 Connecting CJ-series Expansion Racks

CS/CJ-series I/O Connecting Cables are used to connect the NJ-series CPU Rack and CJ-series Expansion Racks.

● CS/CJ-series I/O Connecting Cables

- These connectors are equipped with easy-lock connectors.
- Use them to connect the CPU Rack to an Expansion Rack or to connect two Expansion Racks.

Model number	Cable length
CS1W-CN313	0.3 m
CS1W-CN713	0.7 m
CS1W-CN223	2 m
CS1W-CN323	3 m
CS1W-CN523	5 m
CS1W-CN133	10 m
CS1W-CN133B2	12 m

- The CS/CJ-series I/O Connecting Cables are used to connect the I/O Control Unit on the NJ-series CPU Rack to the I/O Interface Unit on a CJ-series Expansion Rack or to connect the I/O Interface Units on two CJ-series Expansion Racks.
- Install the Racks and select I/O Connecting Cables so that the total length of all I/O Connecting Cables does not exceed 12 m.
- The following diagram shows where each I/O Connecting Cable must be connected on each Rack. The Rack will not operate if the cables aren't connected properly.

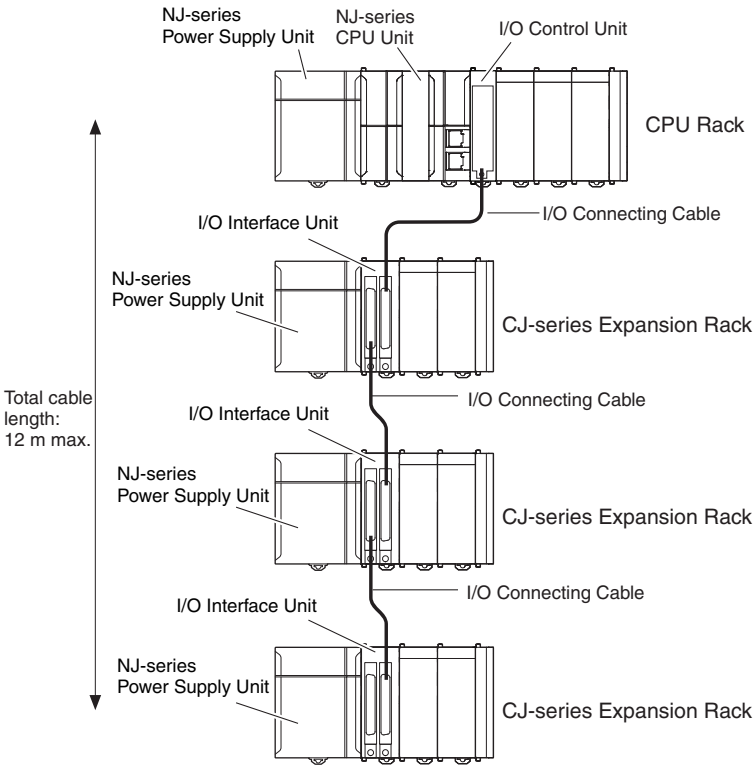

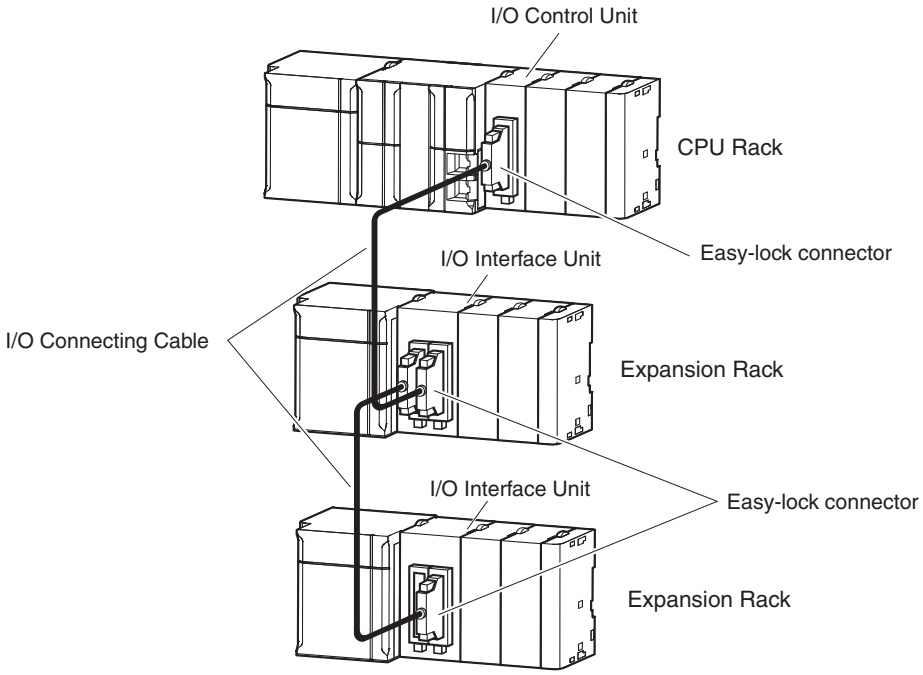

- The top and bottom of the connector are different. Be sure the connector is facing the correct direction before connecting it.

● Connecting the Easy-lock Connectors

Insert the connector until it locks in place. The Controller will not operate properly if the connector is not inserted completely.

To remove the connector, press the tabs and pull on the connector.

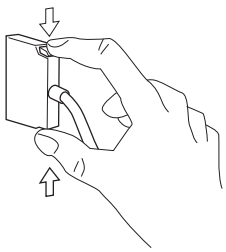

Precautions for Correct Use

- When using an I/O Connecting Cable with a locking connector, be sure that the connector is firmly locked in place before using it.
- Always turn OFF the power supply to the Controller before connecting a cable.
- An I/O bus check error will occur and the Controller will stop if an I/O Connecting Cable's connector is disconnected from the Rack. Be sure that the connectors are secure.
- A 63-mm hole will be required if the I/O Connecting Cable must pass through a hole when connecting an Expansion Rack.
- Do not bend the I/O Connecting cable past its natural bending radius or pull in it with excessive force.
- The cables can withstand a pulling force up to 49 N (11 lbs).
- The minimum bending radius is shown in the following diagram.

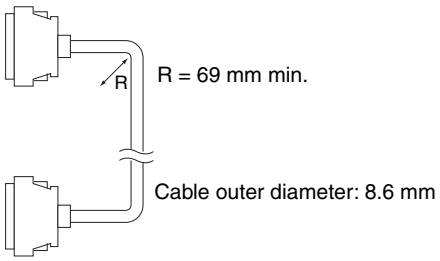

- Always attach the cover to the output connector (left side) on the last I/O Interface Unit on the last Expansion Rack to protect it from dust.

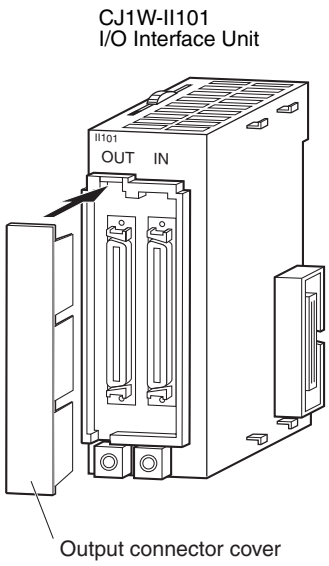

4-3-5 Assembled Appearance and Dimensions

The NJ-series Units, including the Power Supply Unit, the CPU Unit, and I/O Units, are connected to each other. An End Cover is connected to the right end.

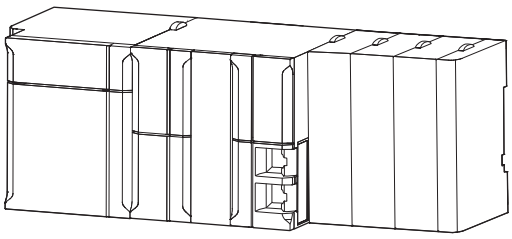

Dimensions

Power Supply Unit

Model	Unit width (mm)
NJ-PA3001	70
NJ-PD3001	70

CPU Unit

Model	Unit width (mm)
NJ501-1500	90
NJ501-1400	
NJ501-1300	
NJ501-1520	
NJ501-1420	
NJ501-1320	
NJ301-1200	
NJ301-1100	

End Cover

Model	Unit width (mm)
CJ1W-TER01	14.7

Other Units come into two widths: 20 mm and 31 mm.

20-mm-wide Units

Name	Model	Unit width (mm)
I/O Control Unit	CJ1W-IC101	20
32-point Basic I/O Units	CJ1W-ID231/ID232/ID233	
	CJ1W-OD231/OD232/OD233/OD234	
B7A Interface Units	CJ1W-B7A22 CJ1W-B7A14 CJ1W-B7A04	

31-mm-wide Units

Name	Model	Unit width (mm)
I/O Interface Unit	CJ1W-II101	31
8-point and 16-point Basic I/O Units	CJ1W-ID201 CJ1W-ID211/212 CJ1W-IA111/201 CJ1W-OD20□ CJ1W-OD211/212/213 CJ1W-OC201/211 CJ1W-OA201	
32-point Basic I/O Units	CJ1W-MD231/232/233	
64-point Basic I/O Units	CJ1W-ID261 CJ1W-OD261 CJ1W-MD261	
	CJ1W-ID262 CJ1W-OD262/263 CJ1W-MD263/563	
Interrupt Input Unit	CJ1W-INT01	
Quick-response Input Unit	CJ1W-IDP01	
Analog I/O Units	CJ1W-AD□□□-V1 CJ1W-AD042 CJ1W-DA□□□ CJ1W-DA042V CJ1W-MAD42	
Process I/O Units	CJ1W-AD04U CJ1W-PH41U CJ1W-PDC15	
Temperature Control Units	CJ1W-TC□□3/□□4	
High-speed Counter Unit	CJ1W-CT021	
ID Sensor Units	CJ1W-V680C11 CJ1W-V680C12	
Controller Link Unit	CJ1W-CLK23	
Serial Communications Units	CJ1W-SCU22/32/42	
EtherNet/IP Unit	CJ1W-EIP21	
DeviceNet Unit	CJ1W-DRM21	
CompoNet Master Unit	CJ1W-CRM21	
PROFINET-IO Unit	CJ1W-PNT21	
PROFIBUS-DP Master Unit	CJ1W-PRM21	
PROFIBUS-DP Slave Unit	CJ1W-PRT21	

● Design Example for Width W

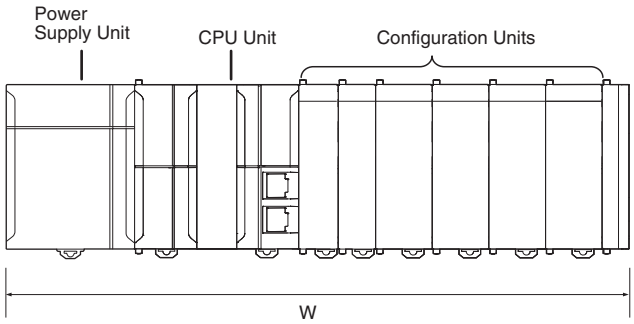

Power Supply Unit: NJ-PA3001 (70 mm)

CPU Unit: NJ501-1500 (90 mm)

Basic I/O Units: CJ1W-ID231 (20 mm) × 2

Special I/O Units: CJ1W-AD081-V1 (31 mm) × 4

CPU Bus Unit: CJ1W-EIP21 (31 mm) × 1

W = 70 + 90 + 20 x 2 + 31 × 4 + 31 × 1 + 14.7 (End Cover) = 369.7 mm

Refer to *Rack Current Consumption and Width Display* on page 3-17 for the procedure to check the width of each Rack from the Sysmac Studio.

Installation Dimensions

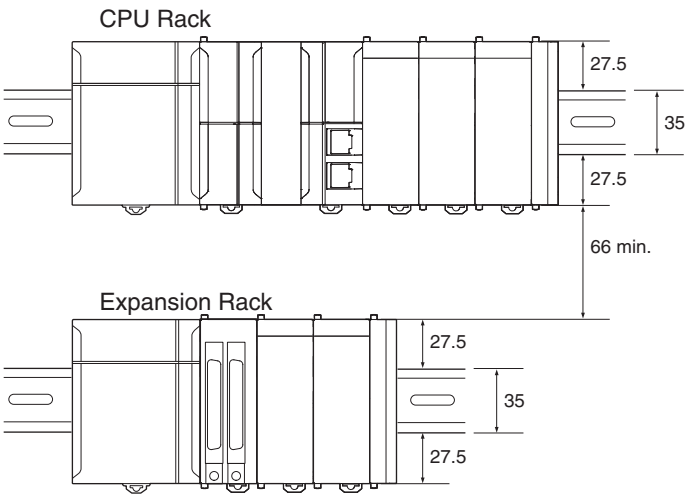

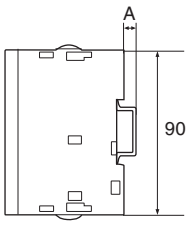

DIN Track	A
PFP-100N2	16 mm
PFP-100N	7.3 mm
PFP-50N	7.3 mm

(Unit: mm)

Installation Height

With a height of 90.0 mm, the CPU Unit is the highest component in an NJ-series CPU Rack. It is also higher than any Units on an Expansion Rack. When a cable is connected (such as a connecting cable to Support Software), however, even greater height is required. Allow sufficient depth in the control panel containing the Controller.

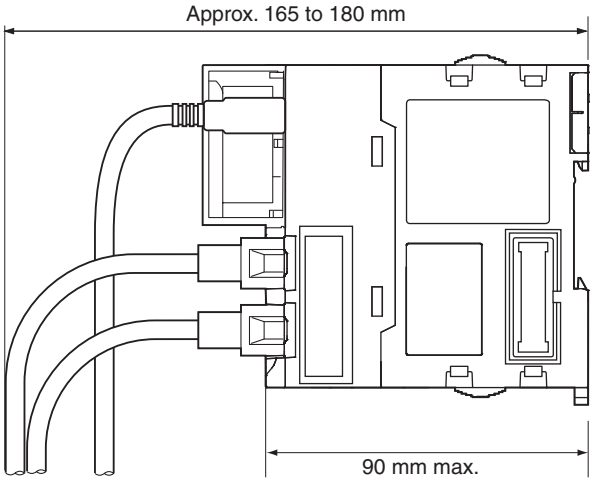

4-4 Wiring

WARNING

- Do not input a voltage or current that exceeds the specified range into a Unit or slave. If a voltage or current that is outside the specified range is input, the Unit or slave may fail or a fire may occur.

CAUTION

- Tighten terminal block screws and cable screws to the torques specified in this manual or in the reference manuals. Loose screws can cause fire or malfunction.
- Do not touch devices while power is supplied or immediately after the power supply is turned OFF. You may be burnt.

4-4-1 Power Supply Wiring

AC Power Supply Units

● NJ-PA3001 Power Supply Unit

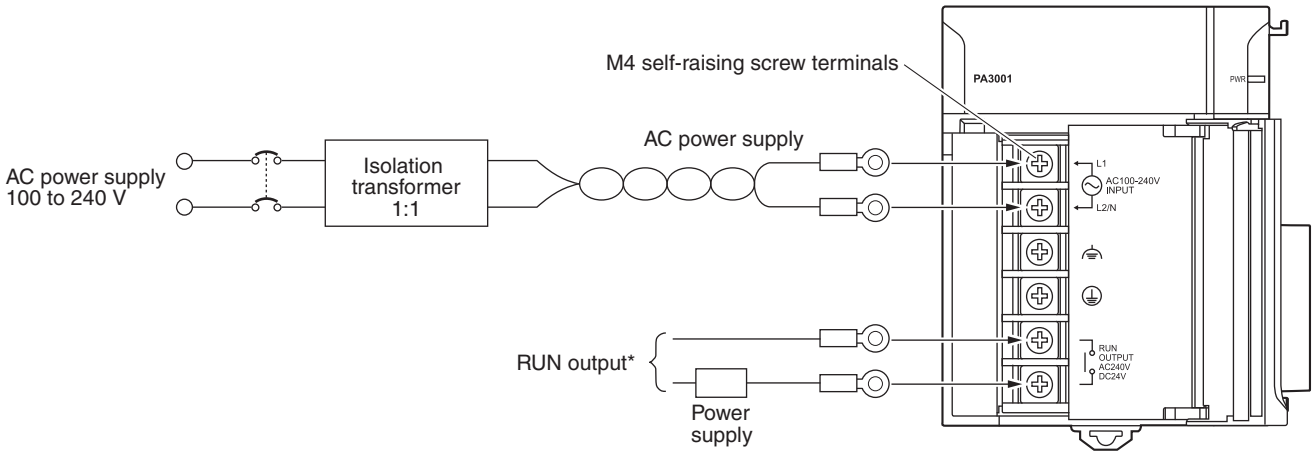

* The RUN output is ON when the CPU Unit is in RUN mode and OFF when the CPU Unit is in PROGRAM mode or a Controller error in the major fault level occurs.

Additional Information

The RUN output function is enabled only when mounted to a CPU Rack.

AC Power Source

- Supply 100 to 240 VAC.
- Keep voltage fluctuations within the specified range:

Supply voltage	Allowable voltage fluctuations
100 to 240 VAC	85 to 264 VAC

- If one power supply phase of the equipment is grounded, connect the grounded phase side to the L2/N terminal.

Isolation Transformer

The Controller's internal noise isolation circuits are sufficient to control typical noise in power supply lines. Noise between the Controller and ground can be significantly reduced by connecting a 1- to-1 isolation transformer. Do not ground the secondary coil of the transformer.

Power Supply Capacity

The power consumption will be 120 VA maximum. per Rack for the NJ-PA3001. When you select the power supply, consider that surge current will flow when the power is turned ON. Refer to *3-3-1 Models and Specifications* for information on surge current specifications.

RUN Output

This output is ON when the CPU Unit is operating; it is OFF when the CPU Unit is in PROGRAM mode or a Controller error in the major fault level occurs.

The RUN output can be used to control external systems, such as in an emergency stop circuit that turns OFF the power supply to external systems when the CPU Unit is not operating. (Refer to *4-2 Fail-safe Circuits* for more information.)

Item	NJ-PA3001	
Contact form	SPST-NO	
Maximum switching capacity	240 VAC:	2 A for resistive loads
	120 VAC:	0.5 A for inductive loads
	24 VDC:	2 A for resistive loads

● Crimp Terminals

The terminals on the Power Supply Unit are M4, self-raising terminals with screws.

Precautions for Safe Use

- Use crimp terminals for wiring.
- Do not connect bare stranded wires directly to terminals.
- Tighten the terminal block screws to a torque of 1.2 N·m.
- Use crimp terminals (M4) having the dimensions shown below.
  - Crimp Terminals for AC Power Supplies

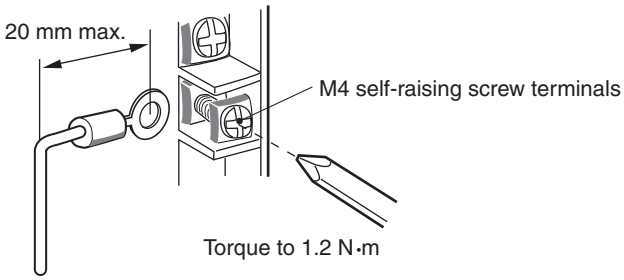

- Always remove any dustproof labels that are on the top of the Units when they are shipped before you turn ON the power supply. If the labels are not removed, heat will accumulate and malfunctions may occur.

Precautions for Correct Use

Do not allow wire clippings, shavings, or other foreign material to enter any Unit. Otherwise, Unit burning, failure, or malfunction may occur. Cover the Units or take other suitable countermeasures, especially during wiring work.

DC Power Supplies

● NJ-PD3001 Power Supply Unit

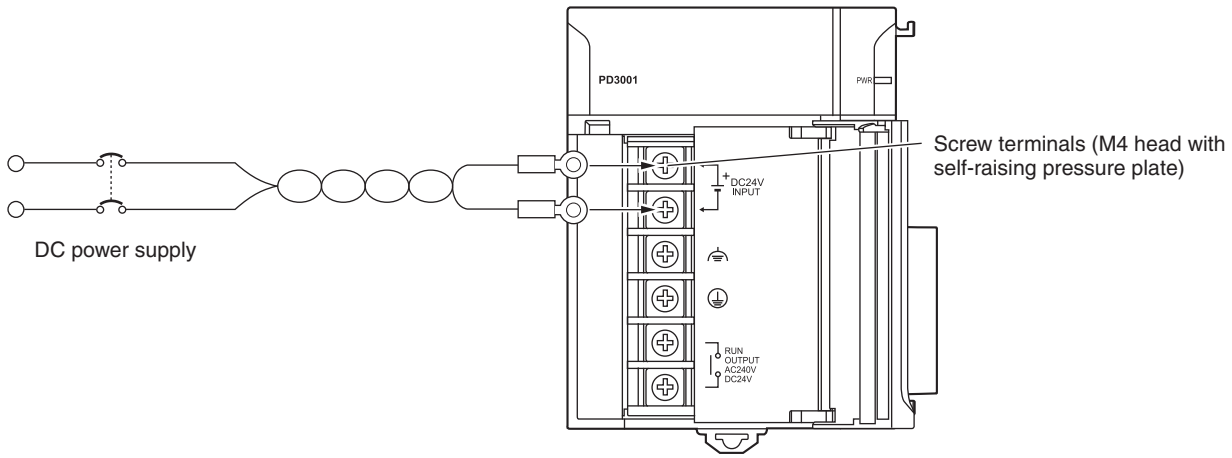

DC Power Source

Supply 24 VDC. Keep voltage fluctuations within the specified range.

Model	Allowable voltage fluctuation range
NJ-PD3001	19.2 to 28.8 VDC (24 VDC ±20%)

Power Supply Capacity

The maximum power consumption is 50 W (NJ-PD3001) per Rack.

When you select the power supply, consider that surge current will flow when the power is turned ON.

Refer to *3-3-1 Models and Specifications* for information on surge current specifications.

RUN Output

This output is ON when the CPU Unit is operating; it is OFF when the CPU Unit is in PROGRAM mode or a Controller error in the major fault level occurs.

The RUN output can be used to control external systems, such as in an emergency stop circuit that turns OFF the power supply to external systems when the CPU Unit is not operating. (Refer to *4-2 Fail-safe Circuits* for more information.)

Item	NJ-PA3001	
Contact form	SPST-NO	
Maximum switching capacity	240 VAC:	2 A for resistive loads
	120 VAC:	0.5 A for inductive loads
	24 VDC:	2 A for resistive loads

Crimp Terminals

The terminals on the Power Supply Unit are M4, self-raising terminals with screws.

Precautions for Safe Use

- Use crimp terminals for wiring.
- Do not connect bare stranded wires directly to terminals.
- Tighten the terminal block screws to the torque of 1.2 N·m.
- Use crimp terminals (M4) having the dimensions shown below.

Crimp Terminals for DC Power Supplies

- Always remove any dustproof labels that are on the top of the Units when they are shipped before you turn ON the power supply. If the labels are not removed, heat will accumulate and malfunctions may occur.

Precautions for Correct Use

Do not allow wire clippings, shavings, or other foreign material to enter any Unit. Otherwise, Unit burning, failure, or malfunction may occur. Cover the Units or take other suitable countermeasures, especially during wiring work.

Grounding

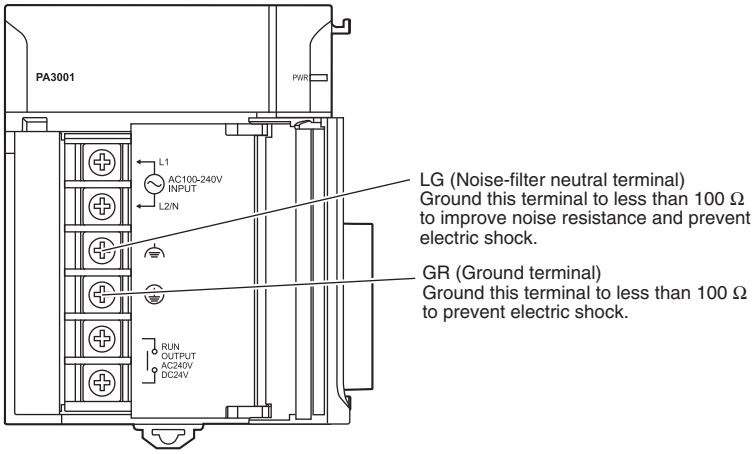

- To help prevent electrical shock, ground the ground terminal (GR: ⏚) with a ground resistance of less than 100 Ω using a 14-gauge wire (minimum cross-sectional area of 2 mm^2).
- The line ground terminal (LG: ⏚) is a noise-filtered neutral terminal. If noise is a significant source of errors or electrical shocks are a problem, connect the line ground terminal to the ground terminal and ground both with a ground resistance of less than 100 Ω.
- If the LG and GR terminals are connected, ground to a resistance of 100 Ω or less to prevent electric shock.
- The ground wire should not be more than 20 m long.
- The NJ-/CJ-series Controllers are designed to be mounted so that they are isolated (separated) from the mounting surface to protect them from the effects of noise in the installation environment (e.g., the control panel).
- Do not share the Controller's ground with other equipment or ground the Controller to the metal structure of a building. Doing so may worsen operation. Whenever possible, use an independent ground (with the ground pole separated by a minimum of 10 m from any other ground pole).
- Ground to 100 Ω or less, and if possible use a separate ground from those of other devices. (Refer to figure (a) in the diagram below.)
- If using an independent ground is not possible, then use a common ground as shown in figure (b). Connect to the ground pole of the other device.

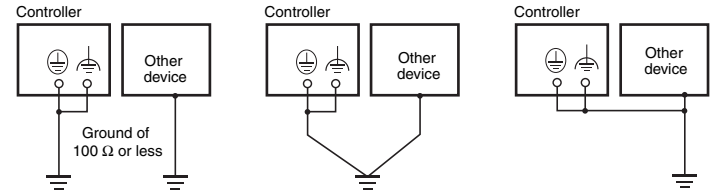

(a) Independent grounds: Best **(b) Common ground: Acceptable** **(c) Common ground: Incorrect**

Grounding Methods

● Crimp Terminals

The terminals on the Power Supply Unit are M4, self-raising terminals with screws.

Precautions for Safe Use

- Use crimp terminals for wiring.
- Do not connect bare stranded wires directly to terminals.
- Tighten the terminal block screws to the torque of 1.2 N·m.
- Use crimp terminals (M4) having the dimensions shown below.

- **Crimp Terminals for DC Power Supply**

- **When wiring an AC Power Supply Unit, if one power supply phase of the equipment is grounded, always connect the grounded phase to the L2/N terminal.**

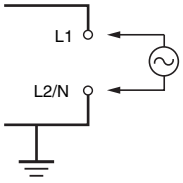

4-4-2 Wiring the Built-in EtherCAT Port

For information on wiring the built-in EtherCAT port, refer to the *NJ-series CPU Unit Built-in EtherCAT Port User's Manual* (Cat. No. W505).

4-4-3 Wiring CJ-series Basic I/O Units with Terminal Blocks

Precautions for Wiring I/O Units

- **I/O Unit Specifications**

Double-check the specifications for the I/O Units. Be particularly careful of the following to prevent failure, damage, and fires.

- Make sure that voltages of the external power supplies are within the ratings of the I/O Units.
- Make sure that load currents are within the ratings of the Output Units.
- Make sure that power supply terminals with polarity are connected correctly.

- **Electric Wires**

- The following wire gauges are recommended.

Terminal Block Connector	Wire Size
18-terminal	AWG 22 to 18 (0.32 to 0.82 mm^2)

- The current capacity of electric wire depends on factors such as the ambient temperature and insulation thickness as well as the gauge of the conductor.

- **Crimp Terminals**

The terminals on the I/O Unit are M3, self-raising terminals with screws.

Precautions for Safe Use

- Use crimp terminals for wiring.
- Do not connect bare stranded wires directly to terminals.
- Tighten the terminal block screws to the torque of 0.5 N·m.
- Use crimp terminals (M3) having the dimensions shown below.

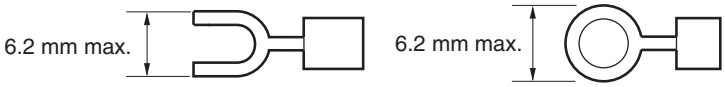

Wiring

- Make sure that all Units are connected properly.
- Do not allow wire clippings, shavings, or other foreign material to enter any Unit during wiring.
- To allow heat to dissipate, always remove any dustproof labels that are on the top of the Units before you turn ON the power supply.

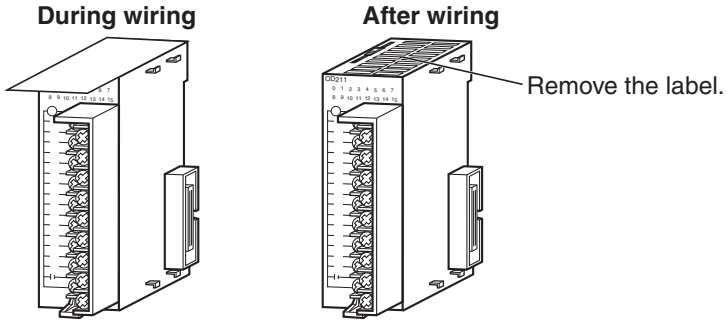

- Wire the Units so that they can be easily replaced.
- Make sure that the I/O indicators are not covered by the wiring.
- Do not place the wiring for I/O Units in the same duct or raceway as power lines. Inductive noise can cause errors in operation.
- Tighten the terminal screws to the torque of 0.5 N·m.

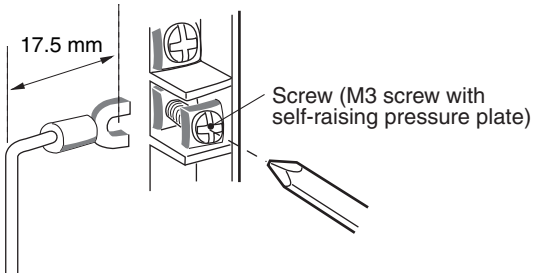

● Terminal Blocks

- The I/O Units are equipped with removable terminal blocks. The lead wires do not have to be removed from the terminal block to remove it from an I/O Unit.
- After you complete wiring, check to see if the terminal block is securely locked.

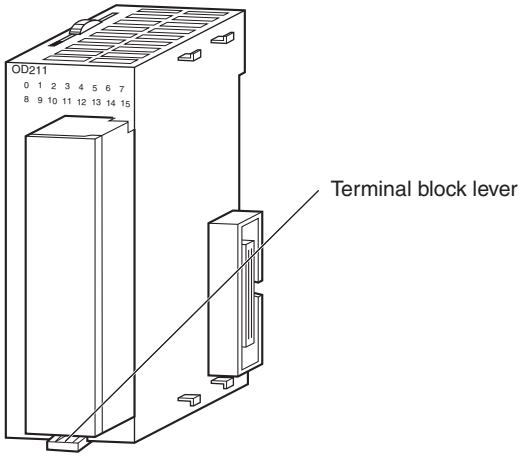

CJ-series Basic I/O Unit

4-4-4 Wiring CJ-series Basic I/O Units with Connectors

This section describes wiring for CJ-series Basic I/O Units with connectors (32- and 64-point Units). Depending on the connector, the following methods are used to connect these Units to external I/O devices.

- Use an OMRON Connecting Cable (equipped with a special connector) to connect to a Terminal Block or Relay Terminal.
- Use a special connector and make your own cable.

Precautions for Safe Use

- Do not apply voltages that exceeds the input voltages for Input Units or the maximum ratings of Output Units.
- When the power supply has positive and negative terminals, be sure to wire them correctly.
- Use reinforced insulation or double insulation on the DC power supply connected to DC I/O Units when required by EC Directives (low voltage).
- When connecting the connector to the I/O Unit, tighten the connector screws to a torque of 0.2 N·m.
- Turn ON the power after checking the connector's wiring.
- Do not pull the cable. Doing so will damage the cable.
- Bending the cable too sharply can damage or break wiring in the cable.

Additional Information

CJ-series Basic I/O Units with 32 or 64 points and Fujitsu connectors have the same connector pin allocations as the C200H High-density I/O Units and CS-series I/O Units with connectors to make them compatible.

Connecting to a Connector-Terminal Block Conversion Unit or I/O Relay Terminal

For details on using OMRON Connecting Cables equipped with special connectors to connect Basic I/O Units with connectors to OMRON Connector-Terminal Block Conversion Units or I/O Relay Terminals, refer to *A-2-4 Connecting Connector-Terminal Block Conversion Units and I/O Relay Terminals*.

Using User-made Cables with Connector

● Available Connectors

Use the following connectors when assembling a connector and cable.

CJ-series 32- and 64-point Basic I/O Units with Fujitsu Connectors

Applicable Units

Model	Specifications	Pins
CJ1W-ID231	Input Unit, 24 VDC, 32 inputs	40
CJ1W-ID261	Input Unit, 24 VDC, 64 inputs	
CJ1W-OD231	Transistor Output Unit with Sinking Outputs, 32 outputs	
CJ1W-OD261	Transistor Output Unit with Sinking Outputs, 64 outputs	
CJ1W-MD261	24-VDC Input/Transistor Output Units, 32 Inputs, 32 Outputs	
CJ1W-MD231	24-VDC Input/Transistor Output Units, 16 Inputs, 16 Outputs	24

Applicable Cable-side Connectors

Connection	Pins	OMRON set	Fujitsu parts
Solder-type	40	C500-CE404	Socket: FCN-361J040-AU Connector cover: FCN-360C040-J2
	24	C500-CE241	Socket: FCN-361J024-AU Connector cover: FCN-360C024-J2
Crimped	40	C500-CE405	Socket: FCN-363J040 Connector cover: FCN-360C040-J2 Contacts: FCN-363J-AU
	24	C500-CE242	Socket: FCN-363J024 Connector cover: FCN-360C024-J2 Contacts: FCN-363J-AU
Pressure-welded	40	C500-CE403	FCN-367J040-AU/F
	24	C500-CE243	FCN-367J024-AU/F

CJ-series 32- and 64-point Basic I/O Units with MIL Connectors

Applicable Units

Model	Specifications	Pins
CJ1W-ID232	Input Unit, 24 VDC, 32 inputs	40
CJ1W-ID233		
CJ1W-ID262	Input Unit, 24 VDC, 64 inputs	
CJ1W-OD232	Transistor Output Unit with sourcing outputs, 32 outputs	
CJ1W-OD262	Transistor Output Unit with sourcing outputs, 64 outputs	
CJ1W-OD233	Transistor Output Unit with sinking outputs, 32 outputs	
CJ1W-OD234		
CJ1W-OD263	Transistor Output Unit with sinking outputs, 64 outputs	
CJ1W-MD263	24-VDC Input/Transistor Output Units, 32 inputs, 32 outputs	
CJ1W-MD563	TTL Input/TTL Output Units, 32 inputs, 32 outputs	
CJ1W-MD232	24-VDC Input/Transistor Output Units, 16 inputs, 16 outputs	20
CJ1W-MD233	24-VDC Input/Transistor Output Units, 16 inputs, 16 outputs	

Applicable Cable-side Connectors

Connection	Pins	OMRON set	DDK parts
Pressure-welded	40	XG4M-4030-T	FRC5-A040-3TOS
	20	XG4M-2030-T	FRC5-A020-3TOS

● Wire Size

We recommend using cable with wire gauges of AWG 24 or AWG 28 (0.2 mm^2 to 0.08 mm^2). Use cable with external wire diameters of 1.61 mm max.

● Wiring Procedure

The following wiring procedure is an example for Fujitsu connectors.

1 Check that each Unit is installed securely.

Precautions for Correct Use

Do not force the cables.

2 Cover the Unit while wiring to prevent wire clippings from entering the Unit. If there is a dustproof label on the top of the Unit, do not remote it before you wire the Unit.

(Remove the label or other covering after wiring has been completed to allow air circulation needed for cooling.)

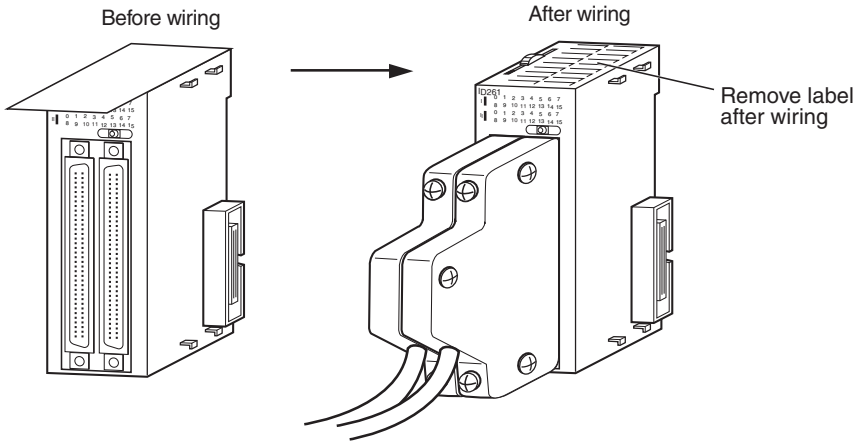

3 When solder-type connectors are being used, be sure not to accidentally short adjacent terminals. Cover the solder joint with heat-shrink tubing.

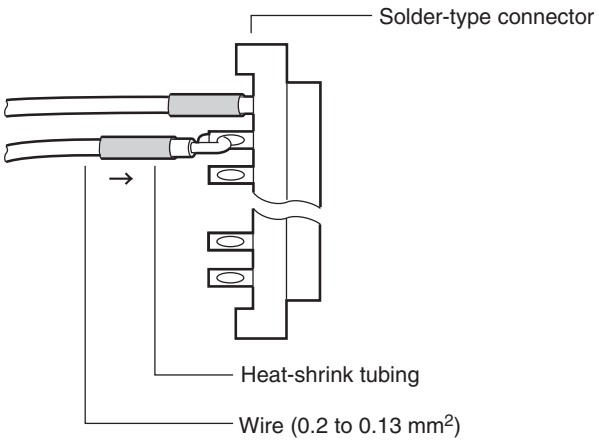

Precautions for Safe Use

If the external power supply to an Output Unit has polarity, connect it with the correct polarity. If the polarity is reversed, current may flow in the reverse direction and damage the connected devices regardless of the operation of the Controller.

4 Assemble the connector (purchased separately).

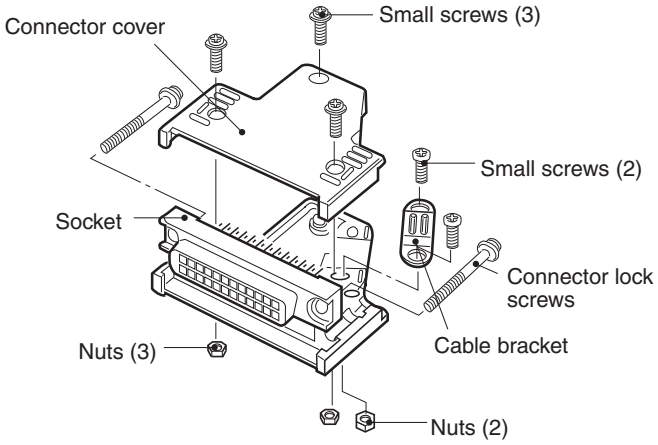

5 Insert the wired connector.

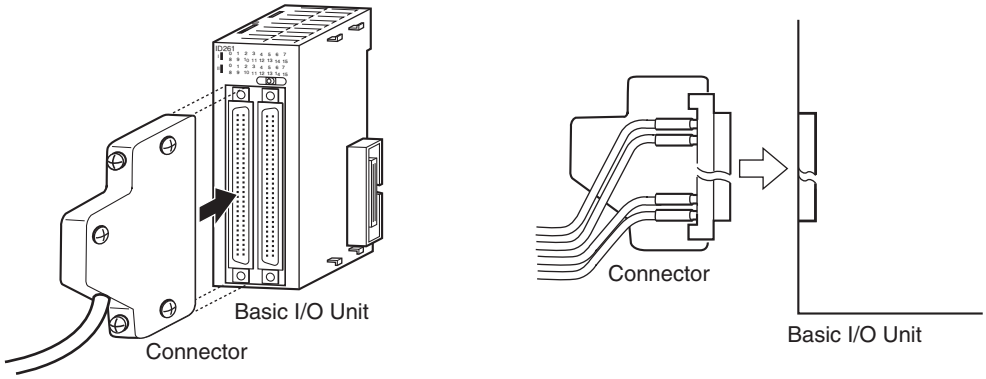

6 (Remove the label or other covering after wiring has been completed to allow air circulation needed for cooling.)

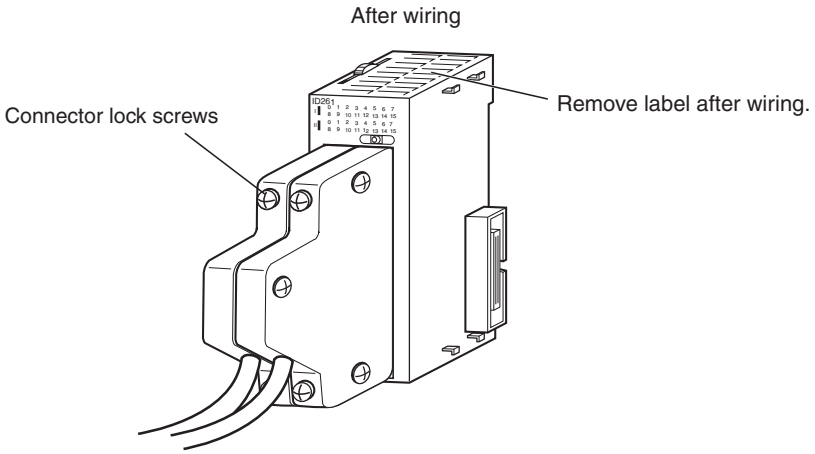

Tighten the connector lock screws to a torque of 0.2 N·m.

4-4-5 Connecting to Connector-Terminal Block Conversion Units or I/O Relay Terminals

OMRON Connecting Cable can be used to connect Basic I/O Units with Connectors to OMRON Connector-Terminal Block Conversion Units or to OMRON I/O Relay Terminals. For details, refer to *A-2-4 Connecting Connector-Terminal Block Conversion Units and I/O Relay Terminals*.

● Connection Examples

Connector-Terminal Block Conversion Unit

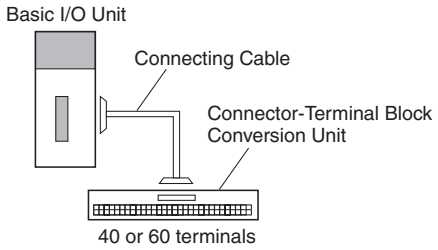

I/O Relay Terminals

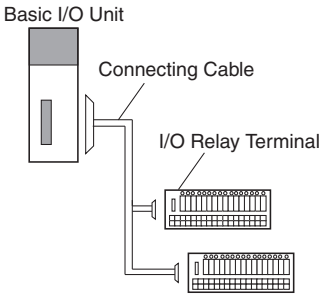

4-4-6 Connecting I/O Devices

Input Devices

Use the following information for reference when selecting or connecting input devices.

● DC Input Units

The following types of DC input devices can be connected.

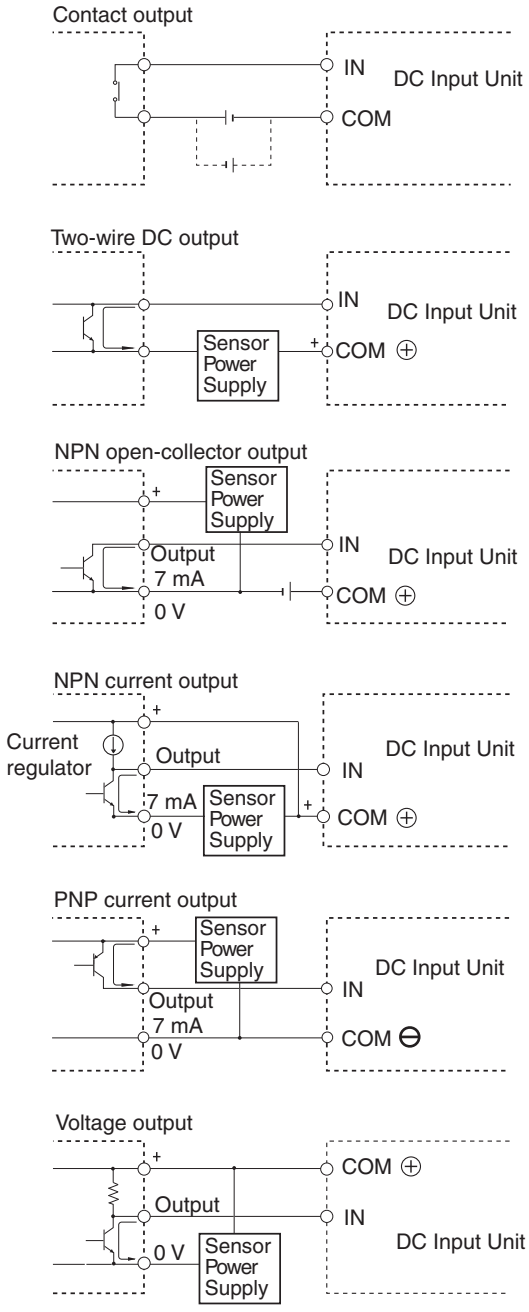

- The circuit below should NOT be used for I/O devices having a voltage output.

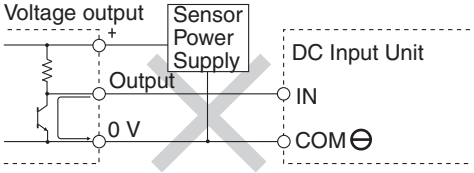

● AC Input Units

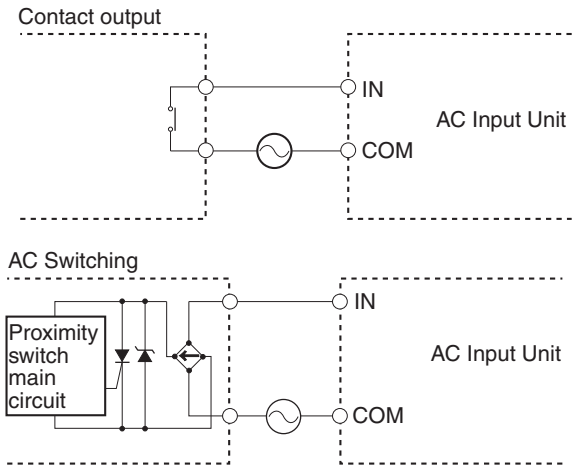

Precautions for Correct Use

When using a reed switch as the input contact for an AC Input Unit, use a switch with an allowable current of 1 A or greater. If reed switches with smaller allowable currents are used, the contacts may fuse due to surge currents.

● Precautions when Connecting a Two-wire DC Sensor

When using a two-wire sensor with a 24-VDC input device, check that the following conditions have been met. Failure to meet these conditions may result in operating errors.

(1) Relation between voltage when the Controller is ON and the sensor residual voltage:

$V_{ON} \leq V_{CC} - V_R$

(2) Relation between voltage when the Controller is ON and sensor control output (load current):

I_{OUT} (min) $\leq I_{ON} \leq I_{OUT}$ (max.)
$I_{ON} = (V_{CC} - V_R - 1.5$ [Controller internal residual voltage]$)/R_{IN}$

When I_{ON} is smaller than I_{OUT} (min), connect a bleeder resistor R. The bleeder resistor constant can be calculated as follows:
$R \leq (V_{CC} - V_R)/(I_{OUT}$ (min.) $- I_{ON})$
Power $W \geq (V_{CC} - V_R)^2/R \times 4$ [allowable margin]
V_{CC}: ON voltage to Input Unit
V_R: Sensor output residual current
I_{ON}: Input Unit ON current
I_{OUT}: Sensor control current (load current)
R_{IN}: Input Unit input impedance

(3) Relation between current when the Controller is OFF and sensor leakage current:

$I_{OFF} \geq I_{leak}$

Connect a bleeder resistor if I_{leak} is greater than I_{OFF}. Use the following equation to calculate the bleeder resistance constant.

$R \leq (R_{IN} \times V_{OFF})/(I_{leak} \times R_{IN} - V_{OFF})$

Power $W \geq (V_{CC} - V_R)^2/R \times 4$ [allowable margin]

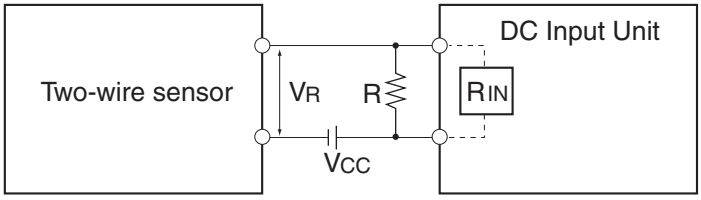

V_{CC}: Power voltage
V_{ON}: Controller ON voltage
V_{OFF}: Controller OFF voltage
I_{ON}: Controller ON current
I_{OFF}: Controller OFF current
R_{IN}: Controller input impedance

V_R: Sensor output residual current
I_{OUT}: Sensor control current (load current)
I_{leak}: Sensor leakage current
R: Bleeder resistance

(4) Precautions on Sensor Surge Current

An incorrect input may occur if a sensor is turned ON after the Controller has started up to the point where inputs are possible. Determine the time required for sensor operation to stabilize after the sensor is turned ON and take appropriate measures, such as inserting a timer delay into the user program after turning ON the sensor.

● Programming Example

In this example, the sensor's power supply voltage is used as the input to *SensorVcc*. A timer delay (100 ms for an OMRON Proximity Sensor) is added to the user program to wait for sensor operation to stabilize. After the timer times out and then the *SensorOK* input changes to TRUE, a sensor input to the *SensorIn* input causes *InData* to change to TRUE.

Variable	Data type	Initial value	Address	Comment
SensorVcc	BOOL	FALSE	IOBus://rack#0/slot#0/Ch1_In/Ch1_In00	Sensor power supply voltage
SensorIn	BOOL	FALSE	IOBus://rack#0/slot#0/Ch1_In/Ch1_In01	Input from sensor
SensorOK	BOOL	FALSE	---	Sensor stable operation flag
InData	BOOL	FALSE	---	Sensor input data valid flag
egPowerDelay	TON	---	---	Sensor input delay timer

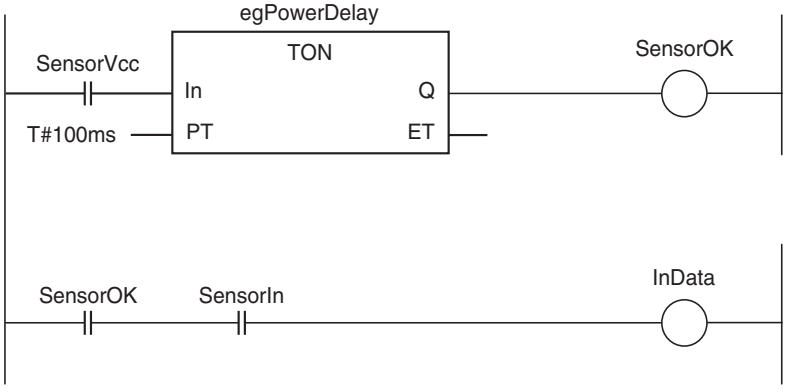

Output Wiring Precautions

Output Short-circuit Protection

If a load connected to the output terminals is short-circuited, output components and the printed circuit boards may be damaged. To guard against this, incorporate a fuse in the external circuit. Use a fuse with a capacity of about twice the rated output.

Transistor Output Residual Voltage

A TTL circuit cannot be connected directly to a transistor output because of the transistor's residual voltage. It is necessary to connect a pull-up resistor and a CMOS IC between the two.

Output Surge Current

When connecting a transistor or triac output to an output device having a high surge current (such as an incandescent lamp), steps must be taken to avoid damage to the transistor or triac. Use either of the following methods to reduce the surge current.

Method 1

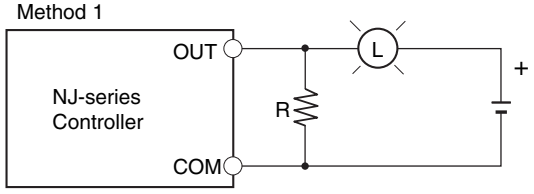

Add a resistor that draws about 1/3 of the dark current consumed by the bulb.

Method 2

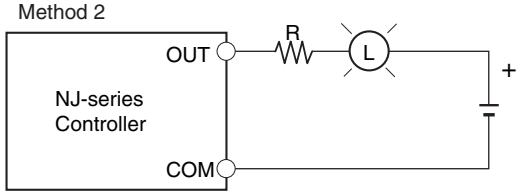

Add a control resistor.

4-4-7 Wiring the Built-in EtherCAT Port

For information on wiring the built-in EtherCAT port, refer to the *NJ-series CPU Unit Built-in EtherNet/IP Port User's Manual* (Cat. No. W506).

4-4-8 Wiring B7A Interface Units

Terminal Arrangement

Terminal	Name	Function	Word	Appearance
1	Port 1 power supply: V1	Connect to the + terminal of the B7A Link Terminal to be connected to port 1 (only when using a common power supply).	n	Connector with clamps 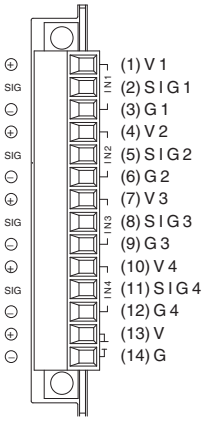
2	Port 1 signal: SIG1	Connect to the SIG terminal of the B7A Link Terminal to be connected to port 1.		
3	Port 1 ground: G1	Connect to the − terminal of the B7A Link Terminal to be connected to port 1.		
4	Port 2 power supply: V2	Connect to the + terminal of the B7A Link Terminal to be connected to port 2 (only when using a common power supply).	n+1	
5	Port 2 signal: SIG2	Connect to the SIG terminal of the B7A Link Terminal to be connected to port 2.		
6	Port 2 ground: G2	Connect to the − terminal of the B7A Link Terminal to be connected to port 2.		
7	Port 3 power supply: V3	Connect to the + terminal of the B7A Link Terminal to be connected to port 3 (only when using a common power supply).	n+2	
8	Port 3 signal: SIG3	Connect to the SIG terminal of the B7A Link Terminal to be connected to port 3.		
9	Port 3 ground: G3	Connect to the − terminal of the B7A Link Terminal to be connected to port 3.		
10	Port 4 power supply: V4	Connect to the + terminal of the B7A Link Terminal to be connected to port 4 (only when using a common power supply).	n+3	
11	Port 4 signal: SIG4	Connect to the SIG terminal of the B7A Link Terminal to be connected to port 4.		
12	Port 4 ground: G4	Connect to the − terminal of the B7A Link Terminal to be connected to port 4.		
13	+ power supply: V	Connect to the + terminal of the external power supply.	---	
14	− power supply: G	Connect to the − terminal of the external power supply.		

Note Terminals V1, V2, V3, V4, and V are connected internally in the Unit, and terminals G1, G2, G3, G4, and G are connected internally in the Unit.

Preparing and Connecting Cables

Use the following procedure to prepare and connect the cables.

Precautions for Correct Use

Always turn OFF the Unit's power supply and communications power supply before attaching or removing connectors.

1 Preparing the Covering

First, use the following procedure to prepare the cable.

(1) Strip approximately 10 mm of the sheath covering the signal lines to match the crimp terminals. Next, twist together the wires of each signal line firmly.

(2) Use vinyl tape or a heat-shrink tube to cover the end of the VCTF cable sheath, as shown in the following diagram.

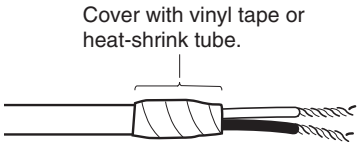

2 Preparing Cable Signal Lines

Attach the crimp terminals to the cable's signal lines.

(1) Attaching Crimp Terminals
Insert the end of the cable into the terminal and crimp.

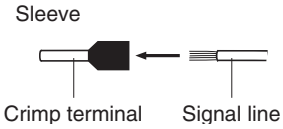

Recommended Crimp Terminals for Cables

Model	Manufacturer
AI-series AI0.75-8GY (Product code: 3200519)	PHOENIX CONTACT
H0.75/14 (Product code: 046290)	Nihon Weidmuller Co., Ltd.
TE-0.75	NICHIFU Co., Ltd.

(2) Insulate the stripped end of each signal line with vinyl tape or heat-shrink tubing.

Precautions for Correct Use

Always use the specified crimp tool to attach the crimp terminals. If a crimp tool is not used, the cable will not be crimped properly, which may cause the cable to become detached from the terminal.

The following crimp tools are available.

Model	Manufacturer
UD6 (Product code: 1204436) or ZA3 Series	PHOENIX CONTACT
Crimper PZ1.5 (Product code: 900599)	Nihon Weidmuller Co., Ltd.
NH77	NICHIFU Co., Ltd.

3 Connecting Cables

Use the following procedure to connect cables to the connection terminals.

(1) Orient the connector properly, and then insert the signal lines fully into the back of each terminal hole in the connector, as shown in the following diagram. (The signal lines are secured in this way, without requiring the use of a tool.) If crimp terminals are not used on the signal lines, use a small flat-blade screwdriver to press down on the orange tab to insert the signal lines.

- Power Supply on One Side (Common Power Supply)

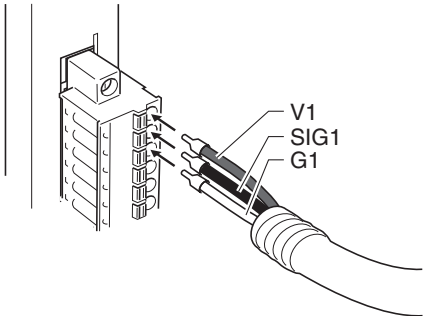

- Power Supply on Both Sides (Separate Power Supplies)

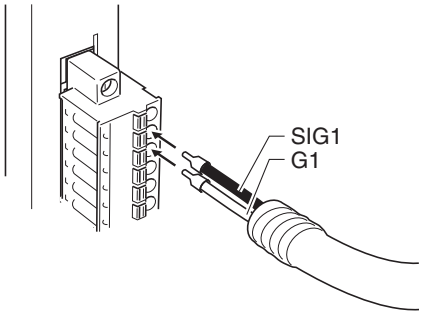

Additional Information

To remove the signal lines from the connector, press down on the orange tab while pulling out the signal line, as shown in the following diagram.

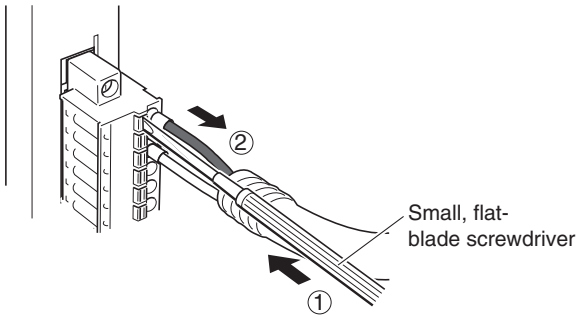

Precautions for Correct Use

To remove the connector from the Unit, fully unscrew the set screws from both sides of the connector, and then remove the connector. Forcibly pulling the connector while the set screws are still attached may damage the connector.

Connection Diagrams

Precautions for Correct Use

- Confirm that terminals are connected correctly. If connections are incorrect, the internal components of the B7A Interface Unit and B7A Link Terminal may be damaged.
- Route the signal lines in separate ducts both inside and outside the control panel to isolate them from power lines.
- Connect cables at a distance that is within the range given in the specifications.
- Always turn OFF the power to the CPU Unit and all other Units before connecting the communications cables.
- Always lay communications cables within ducts.

Standard Mode

- Power Supply on One Side (Common Power Supply)

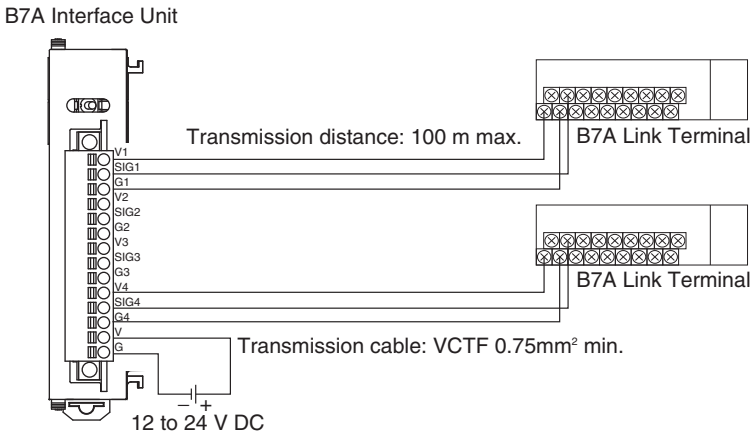

- Power Supply on Both Sides (Separate Power Supplies)

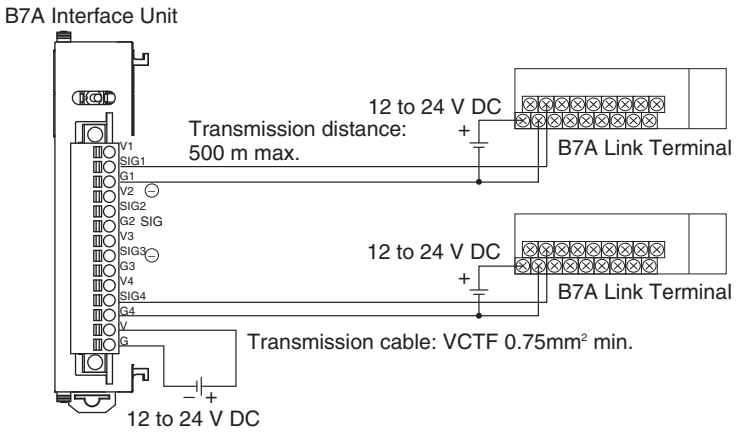

● High-speed Mode

Note If shielded cable is not used, the maximum transmission distance is 10 m regardless of whether a common or separate power supplies are used. (Use VCTF cable of 0.75 mm^2 or higher.)

- Power Supply on One Side (Common Power Supply)

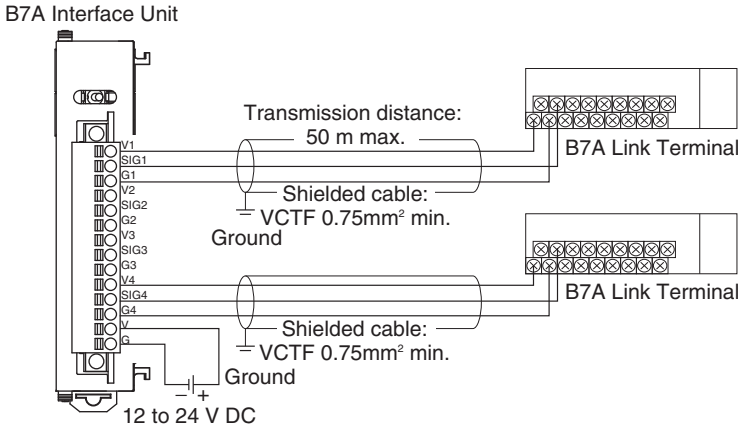

- Power Supply on Both Sides (Separate Power Supplies)

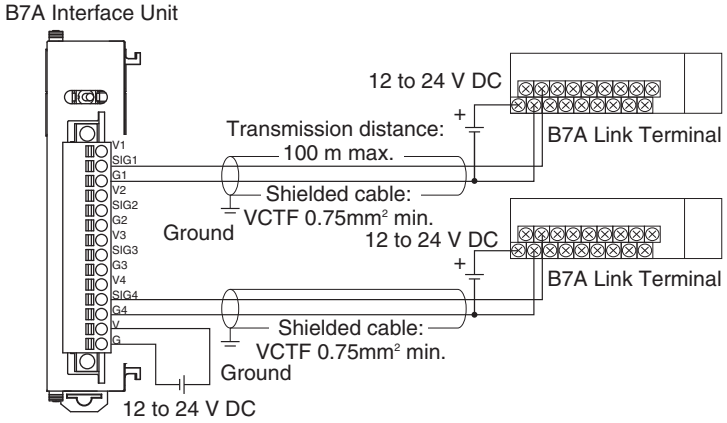

4-5 Control Panel Installation

To ensure system reliability and safety, the system must be designed and configured according to the installation environment (temperature, humidity, vibration, shock, corrosive gases, overcurrent, noise, etc.).

4-5-1 Temperature

Panels have been reduced in size due to space-saving and miniaturization in devices and systems, and the temperature inside the panel may be at least 10 to 15°C higher than outside the panel. Implement the following measures against overheating at the installation site and in the panel, and allow a sufficient margin for the temperature.

High Temperatures

Use the following cooling methods as required, taking into account the ambient temperature and the amount of heating inside the panel.

● Natural Cooling

Natural cooling relies on natural ventilation through slits in the panel, rather than using cooling devices such as fans or coolers. When using this method, observe the following points.

- Do not install the Controller at the top of the panel, where hot air tends to stagnate.
- To provide ventilation space above and below the Controller, leave sufficient distance from other devices, wiring ducts, etc.
- Do not mount the Units in the wrong direction (e.g., vertically or upside down). Doing so may cause abnormal heating in the Controller.
- Do not install the Controller directly above any heat-generating equipment, such as heaters, transformers, and devices with high resistance.
- Do not install the Controller in a location exposed to direct sunlight.

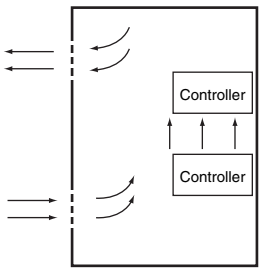

Natural Cooling

● Forced Ventilation (by Fan at Top of Panel)

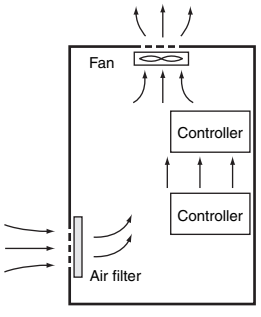

Forced Ventilation Method

● Forced Air Circulation (by Fan in Closed Panel)

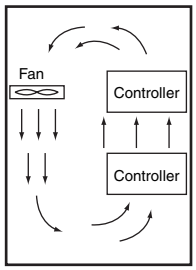

Forced Air Circulation

● Room Cooling (Cooling the Entire Room Where the Control Panel Is Located)

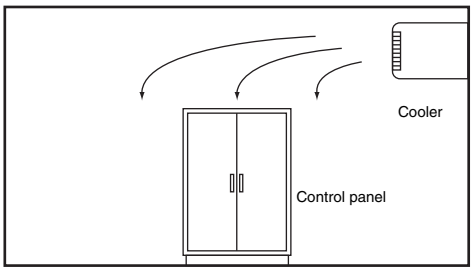

Room Cooling

Low Temperatures

The Controller may not start normally if the temperature is below 0°C when the power is turned ON. Maintain an air temperature of at least approximately 5°C inside the panel, by implementing measures such as installing a low-capacity space heater in the panel. Alternatively, leave the Controller power ON to keep the Controller warm.

4-5-2 Humidity

Rapid temperature changes can cause condensation to occur, resulting in malfunctioning due to short-circuiting. When there is a possibility of this occurring, take measures against condensation, such as leaving the Controller power ON at night or installing a heater in the control panel to keep it warmer.

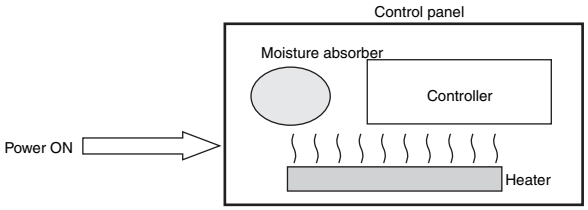

Examples of Measures against Condensation

4-5-3 Vibration and Shock

The Controller is tested for conformity with the sine wave vibration test method (IEC 60068-2-6) and the shock test method (IEC 60068-2-27) of the Environmental Testing for Electrotechnical Products. It is designed so that malfunctioning will not occur within the specifications for vibration and shock. If, however, the Controller is to be used in a location in which it will be directly subjected to regular vibration or shock, then implement the following countermeasures:

- Either separate the control panel from the source of the vibration or shock, or secure the Controller and the panel with rubber padding to prevent vibration.
- Make the building or the floor vibration-resistant.
- To prevent shock when other devices in the panel such as electromagnetic contactors operate, secure either the source of the shock or the Controller with rubber padding.

4-5-4 Atmosphere

Using the Controller in any of the following locations can cause defective contact with connectors and corrosion of components. Implement countermeasures such as purging the air as required.

- In locations exposed to dust, dirt, salt, metal powder, soot, or organic solvents, use a panel with an airtight structure. Be careful of temperature increases inside the panel.
- In locations exposed to corrosive gas, purge the air inside the panel to clear the gas and then pressurize the inside of the panel to prevent gas from entering from outside.
- In locations where flammable gas is present, either use an explosion-protected construction or do not use the Controller.

4-5-5 Electrical Environment

When installing or wiring devices, make sure that there will be no danger to people and that noise will not interfere with electrical signals.

Controller Installation Location

Install the Controller as far away as possible from high-voltage (600 V or higher) and power devices to ensure safe operation and maintenance.

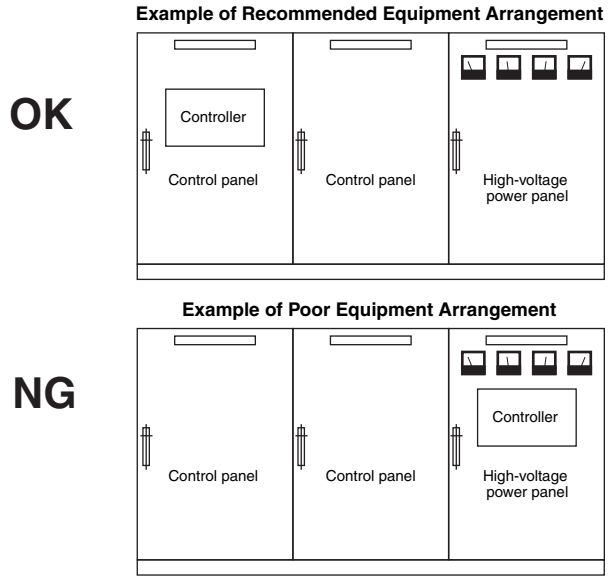

Examples of Equipment Arrangement in Panel with High-voltage Devices

Arrangement of Controller and Units

Observe the following points.

- Place a Unit that does not generate much noise next to the CPU Unit, such as an Input Unit or Communications Unit.
- The coils and contacts in electromagnetic contactors and relays in an external circuit are sources of noise. Do not install them close to the Controller. Locate them at least 100 mm away from the Controller.

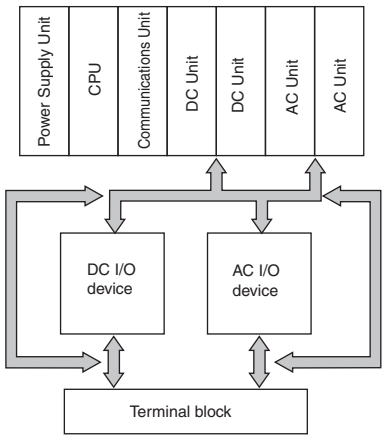

Example of Arrangement in Panel

Wire Layout for the Power Supply System

Observe the following points when wiring the power supply system.

- Separate the Controller power supply from the I/O device power supply and install a noise filter near the Controller power supply feed section.
- Use an isolating transformer to significantly reduce noise between the Controller and the ground. Install the isolating transformer between the Controller power supply and the noise filter, and do not ground the secondary coil of the transformer.
- Keep the wiring between the transformer and the Controller as short as possible, twist the wires well, and keep the wiring separate from high-voltage and power lines.

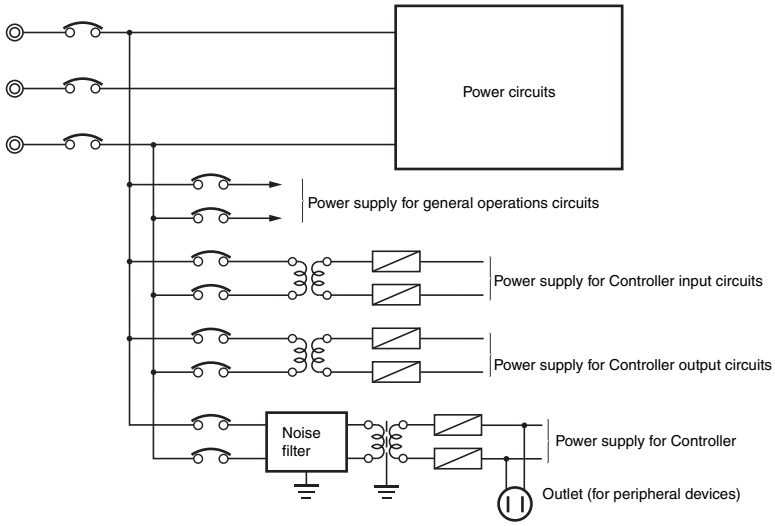

Power Supply System Diagram

Wiring External I/O Signal Lines

Observe the following points when wiring external I/O signal lines.

- To absorb reverse electromotive force when an inductive load is connected to an output signal, connect a surge suppressor near the inductive load in an AC circuit, or connect a diode near the inductive load in a DC circuit.

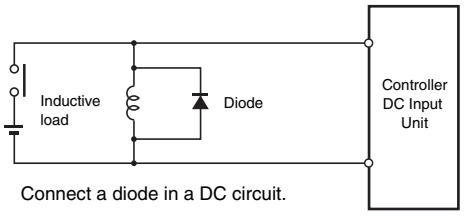

Input Signal Noise Countermeasures

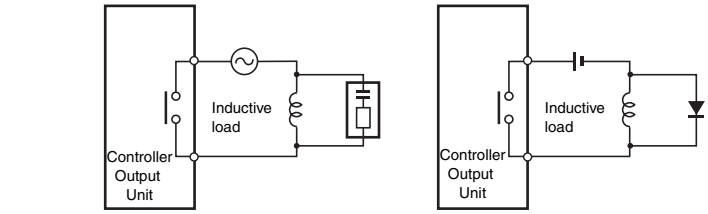

Output Signal Noise Countermeasures

- Never bundle output signal lines with high-voltage or power lines, and do not route them in close proximity or parallel to such lines. If output signal lines must be routed in close proximity to such lines, place them in separate ducts or conduits and be sure to ground the ducts or conduits.

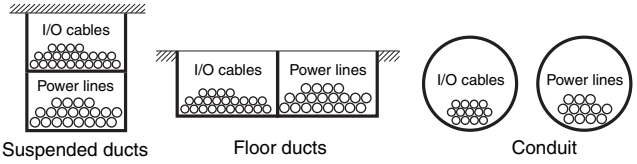

I/O Cable Arrangement

- If the signal lines and power lines cannot be routed in separate ducts, use shielded cable. Connect the shield to the ground terminal at the Controller, and leave it unconnected at the input device.

- Wire the lines so that common impedance does not occur. Such wiring will increase the number of wires, so use common return circuits. Use thick wires with sufficient allowance for the return circuits, and bundle them with lines of the same signal level.
- For long I/O lines, wire the input and output signal lines separately.
- Use twisted-pair wires for pilot lamps (and particularly lamps with filaments).
- Use countermeasures, such as CR surge absorbers and diodes, for input device and output load device noise sources, as required.

External Wiring

Wiring, and noise countermeasures in particular, are based on experience, and it is necessary to closely manage wiring based on experience and information in the manuals.

● Wiring Routes

Each of the following combinations includes different signal types, properties, or levels. They will cause the signal-to-noise ratio to drop due to factors such as electrical induction. As a general rule when wiring, either use separate cables or separate wiring routes for these items. Future maintenance operations and changes to the system will also be made easier by carefully organizing the wiring from the start.

- Power lines and signal lines
- Input signals and output signals
- Analog signals and digital signals
- High-level signals and low-level signals
- Communications lines and power lines
- DC signals and AC signals
- High-frequency devices (such as Inverters) and signal lines (communications)

● Wiring Methods

Observe the following points when wiring power supply and signal cables.

- When routing signal cables with differing characteristics through the same duct, always keep them separated.
- As much as possible, avoid routing multiple power supply lines through the same duct. If it cannot be avoided, then construct a partition between them in the duct and ground the partition.

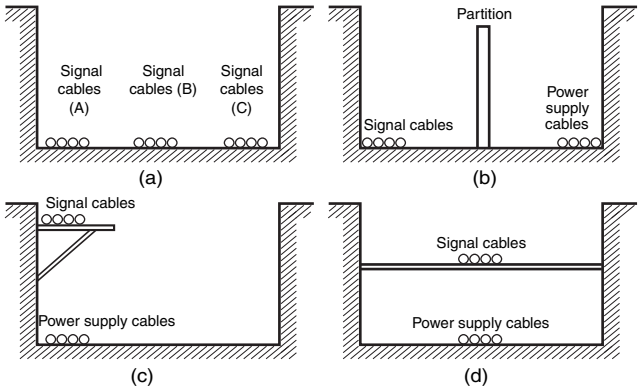

Partitioning Methods for Signal and Power Supply Cables

- To avoid overheating the conduits when using conduits for wiring, do not place wires for a single circuit in separate conduits.

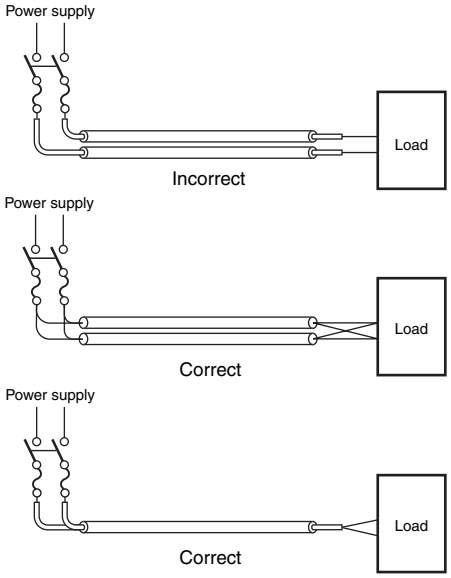

Parallel Wiring (Single Phase)

- Power cables and signal cables adversely affect each other. Do not wire them in parallel.
- Noise induction may occur if the Controller is installed in a panel that includes high-voltage devices. Wire and install them as far apart as possible. (Refer to *Controller Installation Location* on page 4-52.)
- Either install the Controller a minimum of 200 mm away from high-voltage lines or power lines, or place the high-voltage lines or power lines in metal tubing and completely ground the metal tubing to 100 Ω or less.

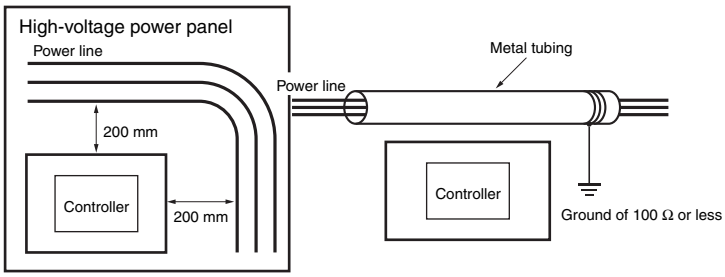

Example: Separating Controller from Power Lines

Other Precautions

- Basic I/O Units have both plus and minus commons, so pay attention to the polarity when wiring.

4-5-6 Grounding

Grounding has the following two purposes.

- Protective Grounding
  Protective grounding is done to ensure safety. It is intended to prevent electrical shock by grounding the electrical potential that is generated by factors such as leakage, induction, or failure.
- Functional Grounding
  Functional grounding is done to protect device and system functions, including prevention of noise from external sources, or prevention of noise from devices or equipment that could have harmful effects on other devices or equipment.

  Grounding requirements sometimes depend on the situation, and they may be found based on experimentation. It is important to sufficiently check the particular circumstances before grounding.

Grounding Methods and Precautions

● Principles of One-point Grounding

For devices to operate properly, the reference potential between the devices must be stabilized. Use one-point grounding so that noise current does not flow to ground lines between the devices.

● Whenever possible, use an independent ground (with the ground pole separated by a minimum of 10 m from any other ground pole).

- Ground to 100 Ω or less, and if possible use a separate ground from those of other devices. (Refer to figure (a) in the diagram below.)
- If using an independent ground is not possible, then use a common ground as shown in figure (b). Connect to the ground pole of the other device.
- Never connect to the same ground as a device that draws a large amount of power, such as a motor or inverter. Ground the devices separately to avoid mutually adverse influences.
- To prevent electrical shock, do not connect to ground poles (or steel frames) to which multiple devices are connected.
- Use a ground pole as close to the Controller as possible and keep the ground line as short as possible.

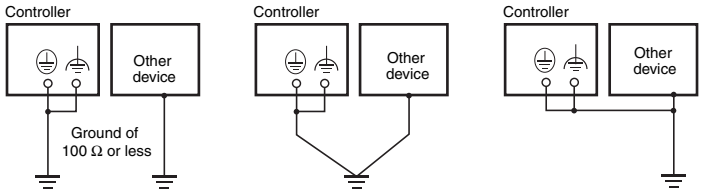

(a) Independent grounds: Best **(b) Common ground: Acceptable** **(c) Common ground: Incorrect**

Grounding Methods

Precautions when Grounding

- If the same ground is used for both the signal lines and the enclosure, isolate the channel base (a grounded metal plate inside a control panel) with an insulating material

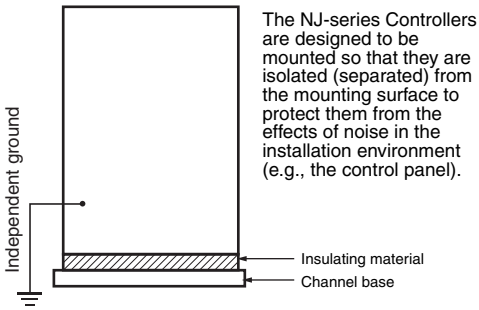

Example: Insulating and Grounding an Enclosure

- To prevent influence from leakage current from other electrical devices, electrically isolate the panel in which the Controller is housed from other devices.
- If high-frequency equipment is present, then ground not only the high-frequency equipment but also the panel itself in which the Controller is housed.
- As shown in the following diagram, when using shielded cable for I/O wiring, connect the shield near the Controller to the enclosure ground terminal. Follow the instructions in the Communications Unit manual for preparing shielded communications cable.

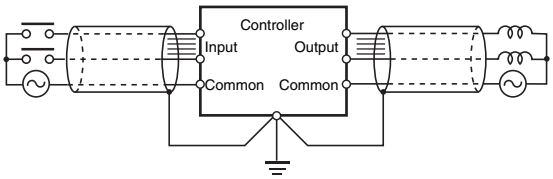

Shielded Cable Ground

Controller Ground Terminals

The Controller has the following two ground terminals.

⏚ Protective ground terminal: Always connected to the Controller chassis to prevent electrical shock.

⏚ Functional ground terminal: Connected to a neutral point in the noise filter to provide a ground when power supply noise causes malfunctioning.

When the functional ground terminal is correctly grounded, it is generally effective in suppressing power supply common noise. Occasionally, however, grounding this terminal will result in picking up more noise, so be careful when using it.

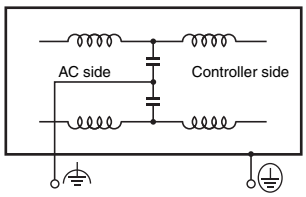

Controller Ground Terminals

Grounding for AC Power Supply Units

When wiring to an AC Power Supply Unit, if one power supply phase of the equipment is grounded, always connect the grounded phase to the L2/N terminal.

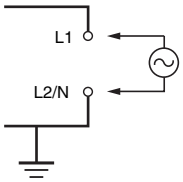

5

Troubleshooting

This section describes the confirmation methods and corrections for errors that occur in the NJ-series Controller and describes hardware-related errors that can occur in the PLC Function Module.

5-1 Operation after an Error 5-2
5-1-1 Overview of NJ-series Status 5-2
5-1-2 Fatal Errors in the CPU Unit 5-3
5-1-3 Non-fatal error in CPU Unit 5-4
5-2 Troubleshooting 5-11
5-2-1 Checking to See If the CPU Unit Is Operating 5-11
5-2-2 Troubleshooting Flowchart for Non-fatal Errors 5-12
5-2-3 Error Table 5-13
5-2-4 Error Descriptions 5-23
5-2-5 Troubleshooting Errors That Are Not in the CPU Unit 5-66

5-1 Operation after an Error

This section describes the error status of the NJ-series Controller and the operation that occurs after an error is detected. Refer to *5-2 Troubleshooting* for details on corrections for specific errors. Refer to the *NJ-series Troubleshooting Manual* (Cat. No. W503) for all of the errors that may occur in an NJ-series Controller.

5-1-1 Overview of NJ-series Status

You can check the operating status of the CPU Unit with the PWR, RUN, and ERROR indicators on the front panels of the Power Supply Unit and CPU Unit.

Power Supply Unit

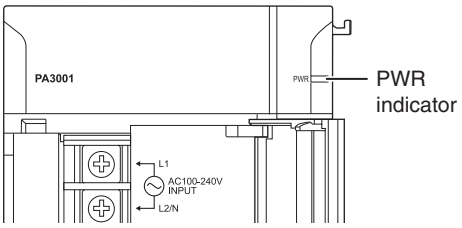

CPU Unit

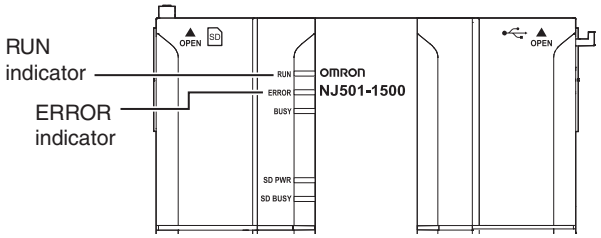

The following table shows the status of front-panel indicators, the status of user program execution, and the ability to connect communications to the Sysmac Studio or NS-series PTs during startup, during normal operation, and when errors occur.

CPU Unit operating status		Front-panel indicators			User program execution status	Communications with Sysmac Studio or NS-series PT
		PWR (green)	RUN (green)	ERROR (red)		
Startup		Lit	Flashing (1-s intervals)	Not lit	Stopped.	Not possible.
Normal operation	**RUN mode**	Lit	Lit	Not lit	Continues.	Possible.
	PROGRAM mode	Lit	Not lit	Not lit	Stopped.	
Fatal error in CPU Unit	**Power Supply Error*1**	Not lit	Not lit	Not lit	Stopped.	Not possible.
	CPU Unit Reset*1	Lit	Not lit	Not lit	Stopped.	
	Incorrect Power Supply Unit Connected*1	Lit	Flashing (3-s intervals)	Lit	Stopped.	
	CPU Unit Watchdog Timer Error*1	Lit	Not lit	Lit	Stopped.	
Non-fatal error in CPU Unit	**Major fault*2**	Lit	Not lit	Lit	Stopped.	Possible. (Communications can be connected from an NS-series PT if EtherNet/IP is operating normally.)
	Partial fault*2	Lit	Lit	Flashing (1-s intervals)	Continues.*3	
	Minor fault*2	Lit	Lit	Flashing (1-s intervals)	Continues.	
	Observation*2	Lit	Lit	Not lit	Continues.	

*1 Refer to *5-1-2 Fatal Errors in the CPU Unit* for information on individual errors.

*2 Refer to *5-1-3 Non-fatal error in CPU Unit* for information on individual errors.

*3 The function module where the error occurred stops.

5-1-2 Fatal Errors in the CPU Unit

Types of Fatal Errors

Some errors are fatal and prevent the CPU Unit from operating. This section describes the errors that cause the operation of the CPU Unit to stop. The Sysmac Studio and NS-series PTs cannot connect communications if a fatal error occurs.

● Power Supply Error

Power is not supplied, the voltage is outside of the allowed range, or the Power Supply Unit is faulty.

● CPU Unit Reset

The CPU Unit stopped operation because of a hardware error. Other than hardware failures, this error also occurs at the following times.

- The power supply to an Expansion Rack is OFF.
- The I/O Connecting Cable is incorrectly installed.
  - The IN and OUT connectors are reversed.
  - The connectors are not mated properly.
- There is more than one I/O Control Unit on the CPU Rack or there is an I/O Control Unit on an Expansion Rack.

● Incorrect Power Supply Unit Connected

There is a CJ-series Power Supply Unit connected to the CPU Rack. The operation of the Controller is stopped.

● CPU Unit Watchdog Timer Error

This error occurs in the CPU Unit. This error occurs when the watchdog timer times out because of a hardware failure or when temporary data corruption causes the CPU Unit to hang.

Checking for Fatal Errors

You can identify fatal errors based on the status of the PWR indicator on the Power Supply Unit and the RUN and ERROR indicators on the CPU Unit, as well as by the ability to connect communications to the Sysmac Studio.

Indicator			Communications with Sysmac Studio	CPU Unit operating status
PWR (green)	RUN (green)	ERROR (red)		
Not lit	Not lit	Not lit	Not possible.*	Power Supply Error
Lit	Not lit	Not lit		CPU Unit Reset
Lit	Flashing (3-s intervals)	Lit		Incorrect Power Supply Unit Connected
Lit	Not lit	Lit		CPU Unit Watchdog Timer Error

* Power Supply Errors and Incorrect Power Supply Unit Connected errors can be differentiated with the indicators. There is no need to check communications with the Sysmac Studio.

5-1-3 Non-fatal error in CPU Unit

Event Levels

Non-fatal errors that occur are managed as Controller events in the NJ-series Controller. Controller events are classified into levels according to the degree of the effect that the events have on control. When an event occurs, the Sysmac Studio or PT will display the level. Refer to the *NJ-series Troubleshooting Manual* (Cat. No. W503) for details on Controller events.

- Major Fault Level
  These errors prevent control operations for the entire Controller. If a major fault level error is detected, user program execution is stopped immediately and the loads for all slaves (including remote I/O) are turned OFF. With EtherCAT slaves and some CJ-series Special Units, you can set the slave settings or Unit settings to select whether outputs will go OFF or retain their previous status. You cannot reset major fault level errors from the user program, the Sysmac Studio, or an NS-series PT. To recover from a major fault level error, remove the cause of the error, and either cycle the power supply to the Controller or reset the Controller from the Sysmac Studio.
- Partial Fault Level
  These errors prevent control operations in a certain function module in the Controller. The NJ-series CPU Unit continues to execute the user program even after a partial fault level error occurs. You can include error processing in the user program to safely stop any devices in operation. After you remove the cause of the error, execute one of the following to return to normal status.
  - Reset the error from the user program, the Sysmac Studio, or an NS-series PT.
  - Cycle the power supply.
  - Reset the Controller from the Sysmac Studio.
- Minor Fault Level
  These errors prevent part of the control operations in a certain function module in the Controller. The troubleshooting for minor fault level errors is the same as the processing for partial fault level errors.
- Observations
  These errors do not affect the control operations of the Controller. Observations serve as warnings to the user so that the error does not develop into an error at a higher level.
- Information
  Events that are classified as information do not indicate errors.

You can change the event level for some events. Refer to *NJ-series CPU Unit Software User's Manual* (Cat. No. W501) for information on changing event levels. Refer to *5-2 Troubleshooting* in this manual to see the events for which you can change the event level.

● Operation for Each Level

The operation that is performed when an error occurs depends on the error level of the Controller event.

Item	Event level				
	Controller errors				Controller information
	Major fault level	Partial fault level	Minor fault level	Observation	Information
Definition	These errors are serious errors that prevent control operations for the entire Controller.	These errors prevent all of the control in a function module other than PLC Function Module.	Errors that prevent a portion of control in one of the function modules.	Errors that do not affect control.	Information level events are not errors, but information provided to the user in the event log.

Item		Event level				
		Controller errors				Controller information
		Major fault level	Partial fault level	Minor fault level	Observation	Information
Event examples (Only a few examples are provided here. Refer to the *NJ-series Troubleshooting Manual* (Cat. No. W503) for a complete list of errors.)		• I/O Bus Check Error (PLC Function Module)	• Motion Control Period Exceeded (Motion Control Function Module) • Communications Controller Error (EtherCAT Master Function Module)	• Positive Limit Input Detected (Motion Control Function Module) • Analog Input Disconnection Detected (CJ-series Unit) • Low Battery Voltage (PLC Function Module)	• Packet Discarded Due to Full Receive Buffer (EtherNet/IP Function Module)	• Power Turned ON • Power Interrupted • Memory All Cleared
Front-panel indicators*1	**PWR (green)**	Lit.	Lit.	Lit.	Lit.	Lit.
	RUN (green)	Not lit.	Lit.	Lit.	Lit.	Lit.
	ERROR (red)	Lit.	Flashes at 1-s intervals.	Flashes at 1-s intervals.	Not lit.	Not lit.
Operation of NJ-series CPU Unit	**RUN output on Power Supply Unit**	OFF	ON	ON	ON	ON
	User program execution status	Stops.	Continues.*2	Continues.	Continues.	Continues.
	Outputs turned OFF	Yes	No	No	No	No
	Error reset	Not possible.	Depends on the nature of the error.	Depends on the nature of the error.	---	---
	Event logs	Recorded. (Some errors are not recorded.)	Recorded.	Recorded.	Recorded.	Recorded.
Outputs from EtherCAT slaves and Basic Output Units		Refer to the *I/O Operation for a Major Fault Level Controller Error* on page 5-6.	• Errors in EtherCAT Master Function Module: Depends on settings in the slave. • Errors in other function modules: Depends on user program.	Depends on the user program.	Depends on the user program.	Depends on the user program.
Sysmac Studio display (while online)		Error messages are automatically displayed. You can display detailed information in the Troubleshooting Dialog Box.			These items are not displayed on the error display.	

*1 If multiple Controller errors have occurred, the indicators show the error with the highest error level.

*2 Operation stops in the function module (Motion Control Function Module, EtherCAT Master Function Module, or EtherNet/IP Function Module) in which the error occurred.

● Operation in the Function Module Where an Error Event Occurred

Function module	Event level			
	Major fault level	Partial fault level	Minor fault level	Observation
PLC Function Module	User program execution stops.	---	Operation continues.	
Motion Control Function Module	All axes stop. (The stop method depends on the error.)	All axes stop. (The stop method depends on the error.)	• The affected axis/axes group stops. (The stop method depends on the settings.) • The motion control instructions that are related to axis operation are not executed.	• Axis operation continues. • The motion control instructions that are not related to axis operation are not executed.
EtherCAT Master Function Module	I/O refreshing for EtherCAT communications stops. (The slaves operate according to the settings in the slaves.)	EtherCAT communications stop. (The slaves operate according to the settings in the slaves.)	I/O refreshing for EtherCAT communications stops or continues according to the fail-soft operation settings in the master. (If I/O refreshing stops, the slaves operate according to the settings in the slaves.)	I/O refreshing for EtherCAT communications continues.
EtherNet/IP Function Module	Part of the EtherNet/IP communications stop. (Online connections to the Sysmac Studio and communications connections with NS-series PTs are possible. (Output (produce) tags in the tag data links operate according to the tag set settings.)	EtherNet/IP communications stop. (The Sysmac Studio and NS-series PT cannot connect communications.)	Part of the EtherNet/IP communications stop. (It is possible to connect communications when the Sysmac Studio or NS-series PT communications connection is not the cause of the error.)	EtherNet/IP communications continue.

● I/O Operation for Major Fault Level Controller Errors

The following table gives the operation of the CPU Unit and the I/O devices for the following errors.

- Unsupported Unit Detected
- I/O Bus Check Error
- End Cover Missing
- Incorrect Unit/Expansion Rack Connection
- Duplicate Unit Number
- Too Many I/O Points
- I/O Setting Check Error

Unit	CPU Unit operation	Unit or slave operation
EtherCAT slave *1	The slave is placed in the Safe-Operational state.	Depends on the slave settings. *2
Servo Drive or NX Unit assigned to an axis	Updating the command values is stopped.	All axes stop immediately.

Unit	CPU Unit operation	Unit or slave operation
CJ-series Basic I/O Unit	Refreshing is stopped.	• All outputs are turned OFF. • All inputs are turned OFF.
CJ-series Special Unit	Refreshing is stopped.	Depends on the Unit operating specifications (the ERH indicator lights).
Devices connected with EtherNet/IP	• For the originators of tag data links, the variables and I/O memory addresses for input (consume) tags are not refreshed. • For the targets of tag data links, operation depends on the settings of the tags sets for the output (produce) tags. *3	Depends on the specifications of the connected devices.

*1 Excluding Servo Drives assigned to an axis.

*2 Settings and setting methods depend on the slave. Refer to the manual for the slave. For a Servo Drive, operation depends on the setting of object 605E hex (Fault Reaction Option Code).

*3 You can set whether to clear output or maintain the data from before the error occurred. Refer to the *NJ-series CPU Unit Built-in EtherNet/IP Port User's Manual* (Cat. No. W506) for details.

The following table gives the operation of the CPU Unit and the I/O devices for the errors that are not listed above.

Unit	CPU Unit operation	Unit or slave operation
EtherCAT slave *1	The slave is placed in the Safe-Operational state.	Depends on the slave settings. *2
Servo Drive or NX Unit assigned to an axis	Updating the command values is stopped.	All axes stop immediately.
CJ-series Basic I/O Unit	• The values of all outputs are cleared to zero. • Input refreshing continues.	• All outputs are turned OFF. • External inputs are refreshed.
CJ-series Special Unit	Refreshing continues.	Depends on the Unit operating specifications.
Devices connected with EtherNet/IP	• For the originators of tag data links, the variables and I/O memory addresses for input (consume) tags are not refreshed. • For the targets of tag data links, operation depends on the settings of the tags sets for the output (produce) tags. *3	Depends on the specifications of the connected devices.

*1 Excluding Servo Drives assigned to an axis.

*2 Settings and setting methods depend on the slave. Refer to the manual for the slave. For a Servo Drive, operation depends on the setting of object 605E hex (Fault Reaction Option Code).

*3 You can set whether to clear output or maintain the data from before the error occurred. Refer to the *NJ-series CPU Unit Built-in EtherNet/IP Port User's Manual* (Cat. No. W506) for details.

Checking for Non-fatal Errors

Use the following methods to check for non-fatal errors.

Checking method	What you can check
Checking the indicators	You can use the indicators to confirm the Controller error level, the error status of the EtherCAT Master Function Module, and the error status of the EtherNet/IP Function Module.
Checking with the troubleshooting function of Sysmac Studio	You can check for current Controller errors, a log of past Controller errors, error sources, error causes, and corrections. You can also check error logs from CJ-series Special Units.*1
Checking with the Troubleshooter of an NS-series PT*2	You can check for current Controller errors, a log of past Controller errors, error sources, error causes, and corrections.
Checking with instructions that read function module error status	You can check the highest-level status and highest-level event code in the current Controller errors.
Checking with system-defined variables	You can check the current Controller error status for each function module.

*1 Detailed information, such as error causes and corrections, is not displayed.

*2 To perform troubleshooting from an NS-series PT, connect the PT to the built-in EtherNet/IP port on the CPU Unit.

This section describes the above checking methods.

Checking the Indicators

● Checking the Level of a Controller Error

You can use the PWR indicator on the Power Supply Unit and the RUN and ERROR indicators on the CPU Unit to determine the event level for an error. The following table shows the relationship between the Controller's indicators and the event level.

Indicator			Event level
PWR (green)	RUN (green)	ERROR (red)	
Lit	Not lit	Lit	Major fault level
Lit	Lit	Flashing (1-s intervals)	Partial fault level
			Minor fault level
Lit	Lit	Not lit	Observation

● Checking Errors in the EtherCAT Master Function Module and EtherNet/IP Function Module

For the EtherCAT Master Function Module and EtherNet/IP Function Module, use the EtherCAT and EtherNet/IP NET ERR indicators to determine whether an error that affects process data communications has occurred and whether a minor fault level error or higher-level error has occurred. The indicator lets you check the status given in the following table.

Indicator	Indicated status
EtherCAT NET ERR	EtherCAT Master Function Module Status • Lit: An error for which normal status cannot be recovered through user actions (i.e., errors for which you must replace the CPU Unit or contact your OMRON representative) has occurred. • Flashing: An error for which normal status can be recovered through user actions has occurred. • Not lit: An error that affects process data communications has not occurred.
EtherNet/IP NET ERR	EtherNet/IP Function Module Status • Lit: An error for which normal status cannot be recovered through user actions (i.e., errors for which you must replace the CPU Unit or contact your OMRON representative) has occurred. • Flashing: An error for which normal status can be recovered through user actions has occurred. • Not lit: There is no minor fault level or higher-level error.

Checking with the Troubleshooting Function of Sysmac Studio

When an error occurs, you can connect the Sysmac Studio online to the Controller to check current Controller errors and the log of past Controller errors.

● Current Errors

Open the Sysmac Studio's Controller Error Tab Page to check the current error's level, source, source details, event name, event code, cause, and correction. Errors are not displayed for observations.

● Log of Past Errors

Open the Sysmac Studio's Controller Log Tab Page to check the time of occurrence, level, source, source details, event name, event code, details, attached information 1 to 4, and corrections for past errors.

Error logs from CJ-series Special Units are displayed on the Controller Event Log Tab Page. Detailed information is not displayed. To check detailed information, use the event codes that are displayed and refer to the error codes that are given in the manual for the relevant Unit. Refer to the *NJ-series Troubleshooting Manual* (Cat. No. W503) for the relationship between error codes and event codes.

Refer to the *NJ-Series Sysmac Studio Version 1 Operation Manual* (Cat. No. W504) for details on troubleshooting with the Sysmac Studio.

Checking with the Troubleshooter of an NS-series PT

If you can connect communications between an NS-series PT and the Controller when an error occurs, you can check for current Controller errors and the log of past Controller errors.

To perform troubleshooting from an NS-series PT, connect the PT to the built-in EtherNet/IP port on the CPU Unit.

● Current Errors

Open the Controller Error Tab Page on the NS-series PT's Troubleshooter to check the current error's event name, event code, level, source, source details, details, and attached information 1 to 4. Observations are not displayed as errors.

However, for some NX Units, you cannot check the event names, event codes, details, and attached information for current errors. Also, observations are not displayed as errors.

● Log of Past Errors

Open the Controller Event Log Tab Page on the NS-series PT's Troubleshooter to check the time of occurrence, level, source, event name, event code, details, and attached information 1 to 4 for past errors.

However, you cannot check the log of previous errors for the Communications Coupler Units, NX Units, EtherCAT slaves, and CJ-series Units.

Refer to the *NJ-Series Sysmac Studio Version 1 Operation Manual* (Cat. No. W504) for details on troubleshooting with the Sysmac Studio.

Checking with Instructions That Read Function Module Error Status

Instructions are provided that allow you to read the error status of each function module from the user program. These instructions get the status and the event code of the error with the highest level.

Applicable function module	Instruction name	Instruction
PLC Function Module	Get PLC Controller Error Status	GetPLCError
	Get I/O Bus Error Status	GetCJBError
Motion Control Function Module	Get Motion Control Error Status	GetMCError
EtherCAT Function Module	Get EtherCAT Error Status	GetECError
EtherNet/IP Function Module	Get EtherNet/IP Error Status	GetEIPError

For details on the instructions that get error status, refer to the *NJ-series Instructions Reference Manual* (Cat. No. W502).

Checking with System-defined Variables

You can check the error status variables in the system-defined variables to determine the status of errors in a Controller. You can read the error status variables from an external device by using communications. Refer to *NJ-series CPU Unit Software User's Manual* (Cat. No. W501) for the system-defined variables.

5-2 Troubleshooting

This section provides basic error identification and troubleshooting flowcharts. Use them when an error occurs in the NJ-series Controller. This section also describes the hardware errors that are related to the PLC Function Module and corrections for those errors.

5-2-1 Checking to See If the CPU Unit Is Operating

When an error occurs in the NJ-series Controller, use the following flowchart to determine whether the error is a fatal error or a non-fatal error.

Whenever possible, set the Sysmac Studio's communications connection in the flowchart to a direct USB connection. If you use Ethernet, there are many reasons that prevent a communications connection for the Sysmac Studio, so time is required to determine if a fatal or non-fatal error has occurred. If a communications connection from the Sysmac Studio is not possible, perform the troubleshooting procedure that is provided in the *NJ-series Troubleshooting Manual* (Cat. No. W503) before you assume that the error is a fatal error.

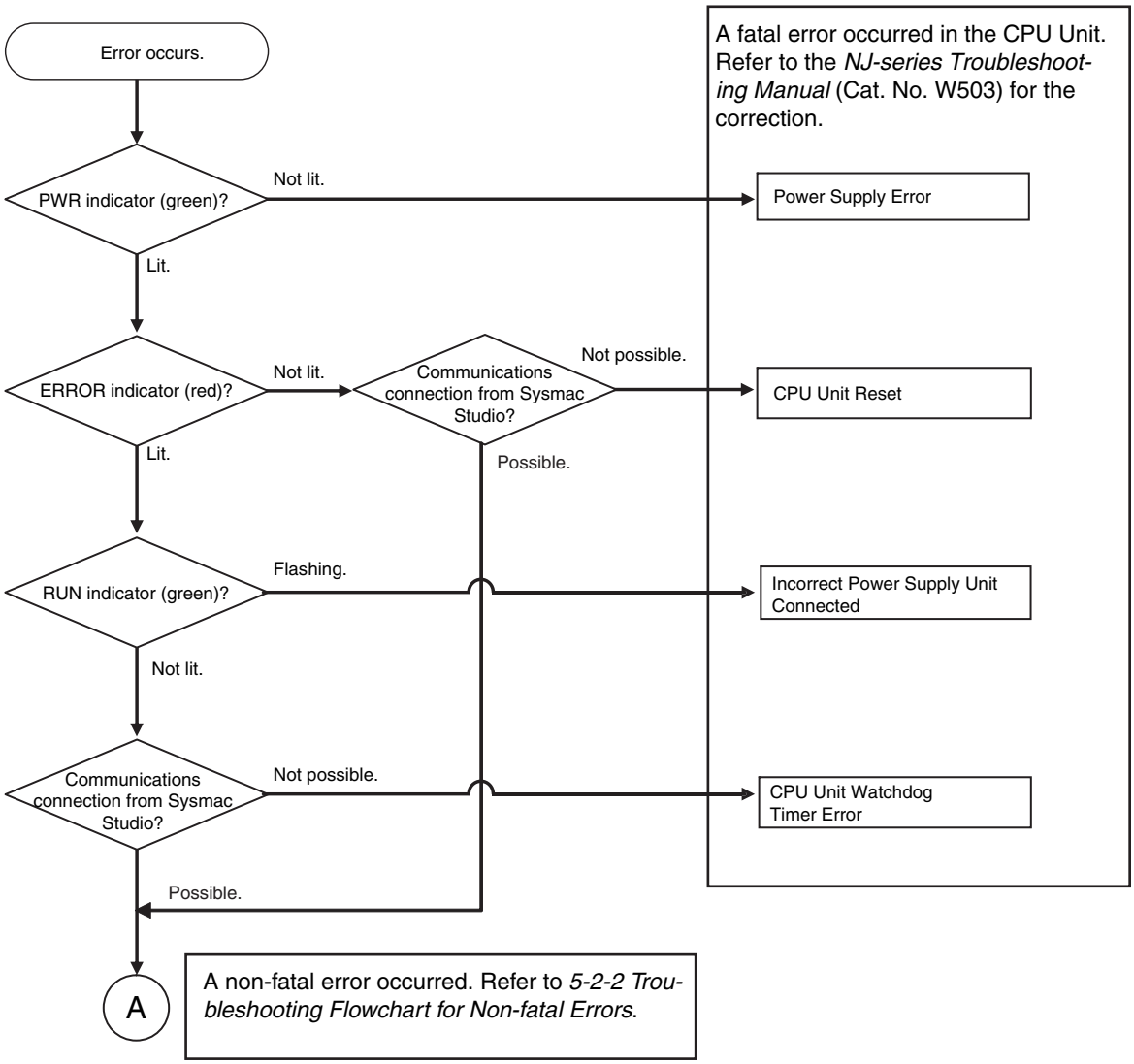

5-2-2 Troubleshooting Flowchart for Non-fatal Errors

For a non-fatal error, use the Sysmac Studio or an NS-series PT to troubleshoot the error with the following flowchart. You can use the indicators to check the following:

- Level
- Whether the error is in the EtherNet/IP Function Module or the EtherCAT Master Function Module
- If the source of the error is the EtherNet/IP Function Module or the EtherCAT Master Function Module, whether you can restore normal status yourself

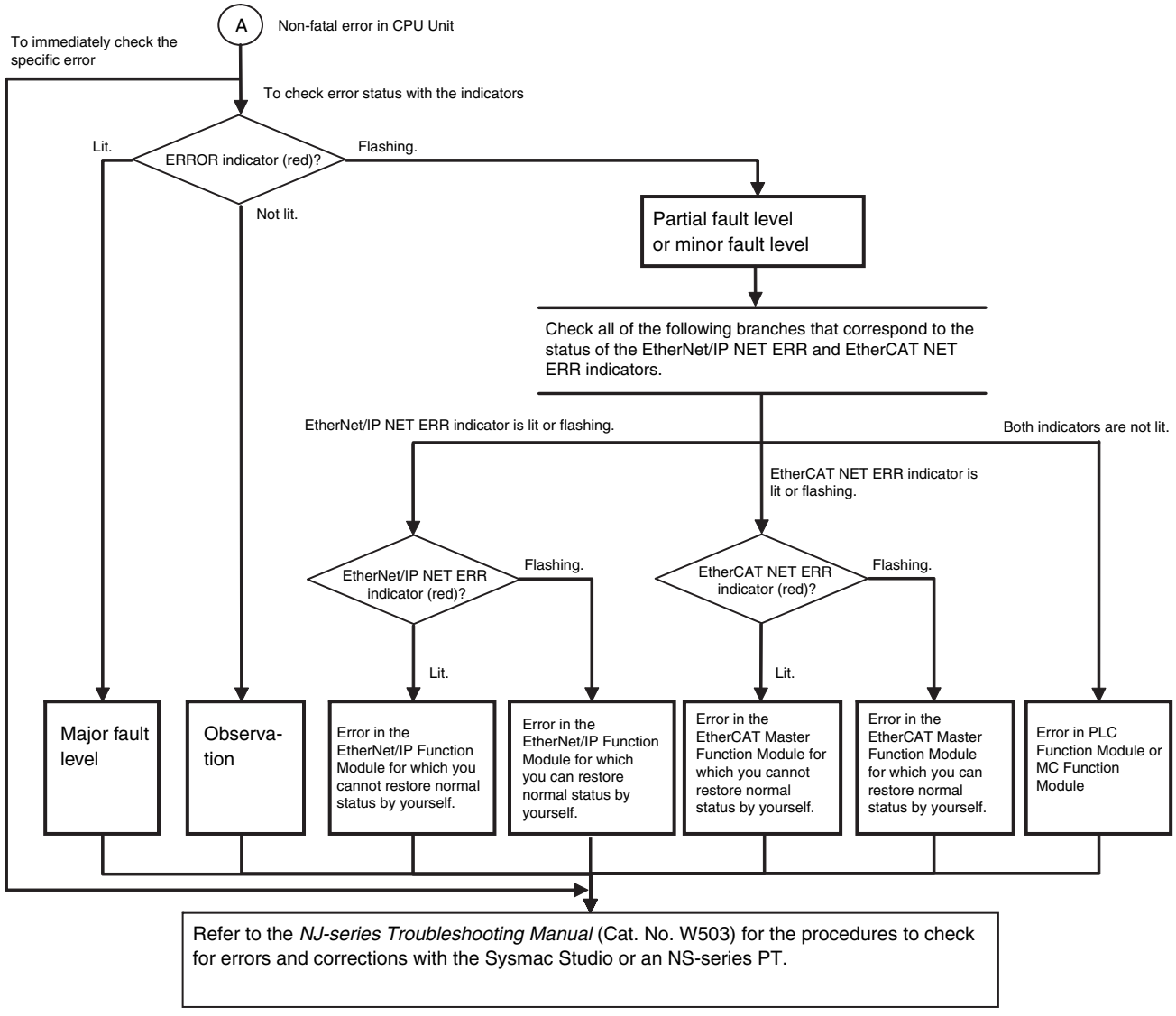

5-2-3 Error Table

The errors (i.e., events) that can occur in the PLC Function Module are given on the following pages. The following abbreviations and symbols are used in the event level column.

Abbreviation	Name
Maj	Major fault level
Prt	Partial fault level
Min	Minor fault level
Obs	Observation
Info	Information

Symbol	Meaning
S	Event levels that are defined by the system.
U	Event levels that can be changed by the user.*

* This symbol appears only for events for which the user can change the event level.

A version in parentheses in the *Event code* column is the unit version of the CPU Unit when the event was added.

Refer to the *NJ-series Troubleshooting Manual* (Cat. No. W503) for all NJ-series event codes.

Errors for Self Diagnosis

Event code	Event name	Meaning	Assumed cause	Level					Reference
				Maj	Prt	Min	Obs	Info	
00090000 hex	DIP Switch Setting Error	An error was detected in the DIP switch setting.	• There is an error in the DIP switch setting.	S					page 5-24
000D0000 hex	Internal NJ-series Bus Check Error	A fatal error was detected on the internal bus.	• Conductive material has gotten inside. • Noise • The CPU Unit has failed.	S					page 5-24
000E0000 hex	Non-volatile Memory Life Exceeded	The specified number of deletions for non-volatile memory was exceeded. Or, the number of bad blocks in memory exceeded the specified value.	• Non-volatile memory life expired.	S					page 5-25
10010000 hex	Non-volatile Memory Restored or Formatted	An error was detected in the non-volatile memory check and file system recovery or formatting was executed. Previous files may have been deleted.	• The Controller power supply was turned OFF while the BUSY indicator was lit. • The power supply to the Controller was interrupted momentarily while the BUSY indicator was lit.	S					page 5-25
10020000 hex	Non-volatile Memory Data Corrupted	A file that must be in non-volatile memory is missing or corrupted.	• The Controller power supply was turned OFF while the BUSY indicator was lit. • The power supply to the Controller was interrupted momentarily while the BUSY indicator was lit. • The CPU Unit has failed.	S					page 5-26

Event code	Event name	Meaning	Assumed cause	Level					Reference
				Maj	Prt	Min	Obs	Info	
10080000 hex	Main Memory Check Error	An error was detected in the memory check of the main memory in the CPU Unit.	• Conductive material has gotten inside. • Noise • There is a software error. • The CPU Unit has failed.	S					page 5-27
100C0000 hex (Ver. 1.03)	Event Level Setting Error	The settings in the event level setting file are not correct.	• The event level settings are not correct because the power supply to the Controller was interrupted or communications with the Sysmac Studio were disconnected during a download of the event level settings. • The event level settings are not correct because the power supply to the Controller was interrupted during a Clear All Memory operation. • Non-volatile memory failed.	S					page 5-28
00070000 hex	Real-Time Clock Stopped	The oscillation of the real-time clock stopped. The real-time clock is set to an illegal time.	• The battery voltage is low. • The battery connector has come loose. • The Battery is missing.			S	U		page 5-28
00080000 hex	Real-Time Clock Failed	The real-time clock in the CPU Unit failed.	• The CPU Unit clock has failed.			S			page 5-29
000B0000 hex	Low Battery Voltage	The voltage of the Battery has dropped.	• The battery voltage is low. • The battery connector has come loose. • The Battery is missing.			S	U		page 5-29
000C0000 hex	CPU Unit Overheat	The temperature inside the CPU Unit exceeded the specified value.	• The ambient operating temperature is too high.			S			page 5-30
10090000 hex	Battery-backup Memory Check Error	An error was detected in the memory check of the battery-backup memory in the CPU Unit.	• The battery voltage is low. • The battery connector has come loose. • The Battery is missing.			S	U		page 5-30
000F0000 hex	SD Memory Card Invalid Type	The current SD Memory Card is not supported.	• An SD Memory Card that is not supported was inserted into the CPU Unit.				S		page 5-31
00100000 hex	SD Memory Card Life Exceeded	The specified number of deletions for the SD Memory Card was exceeded. Or, the number of bad blocks exceeded the specified value.	• The service life of the SD Memory Card was exceeded.			U	S		page 5-31
10030000 hex	SD Memory Card Invalid Format	The file format of the SD Memory Card is not FAT16 or FAT32.	• The file format of the SD Memory Card inserted in the CPU Unit is not FAT16 or FAT32.				S		page 5-32

Event code	Event name	Meaning	Assumed cause	Level					Reference
				Maj	Prt	Min	Obs	Info	
10040000 hex	SD Memory Card Restored or Formatted	An error was detected during the file system check and the file system was restored. Files may have been deleted.	• The Controller power supply was turned OFF while the SD BUSY indicator was lit. • The power supply to the Controller was interrupted momentarily while the SD BUSY indicator was lit. • The SD Memory Card was removed while the SD PWR indicator was lit. • The SD Memory Card is damaged.			U	S		page 5-32
10060000 hex	SD Memory Card Data Corrupted	A file that must be in the SD Memory Card is missing or corrupted.	• The Controller power supply was turned OFF while the SD BUSY indicator was lit. • The power supply to the Controller was interrupted momentarily while the SD BUSY indicator was lit. • The SD Memory Card was removed while the SD PWR indicator was lit. • The SD Memory Card is damaged.			U	S		page 5-33
10070000 hex	SD Memory Card Access Power OFF Error	The power supply to the Controller was interrupted during access to the SD Memory Card.	• The Controller power supply was turned OFF while the SD BUSY indicator was lit. • The power supply to the Controller was interrupted momentarily while the SD BUSY indicator was lit.				S		page 5-33
10310000 hex (Ver. 1.02)	Incorrect SD Memory Card Removal	SD Memory Card removal processing failed.	• The SD Memory Card was removed while the SD PWR indicator was lit.				S		page 5-34

Errors Related to Unit Configuration

Event code	Event name	Meaning	Assumed cause	Level					Reference
				Maj	Prt	Min	Obs	Info	
04010000 hex	I/O Bus Check Error	An error occurred in a bus line transmission between the CPU Unit and the Units in the rack slots. Or, detection of all Special I/O Units and CPU Bus Units was not completed when the power supply to the Controller was turned ON.	• The I/O Connecting Cable is disconnected or wires inside it are broken. • Conductive material has gotten inside. • The connector contact is faulty due to foreign material in the connector. • Noise • A Unit has failed.	S					page 5-35
24010000 hex	Unsupported Unit Detected	An unsupported CJ-series Unit or Power Supply Unit is mounted.	• An unsupported CJ-series Unit or Power Supply Unit was detected.	S					page 5-36

Event code	Event name	Meaning	Assumed cause	Level					Reference
				Maj	Prt	Min	Obs	Info	
24020000 hex	Too Many I/O Points	The total number of I/O points in the connected CJ-series Units exceeds the maximum specified value of the CPU Unit.	• The total number of I/O points in the connected CJ-series Basic I/O Units exceeds 2,560.	S					page 5-36
24030000 hex	End Cover Missing	The End Cover is not connected to right end of the CPU Rack or an Expansion Rack.	• The End Cover is not connected to right end of the CPU Rack or an Expansion Rack. • The End Cover is not connected properly.	S					page 5-37
24040000 hex	Incorrect Unit/Expansion Rack Connection	The number of Units or Expansion Racks exceeds the maximum value specified for the CPU Unit. Or, an Interrupt Input Unit was mounted to a unsupported slot or to an Expansion Rack.	• More than 10 Units are connected to one Rack. • More than three Expansion Racks are connected. • More than two Interrupt Input Units are mounted. • An Interrupt Input Unit was mounted to a unsupported slot or to an Expansion Rack.	S					page 5-37
24050000 hex	Duplicate Unit Number	The same unit number is set for more than one Special I/O Unit or more than one CPU Bus Unit.	• The same unit number is set for more than one Special I/O Unit or more than one CPU Bus Unit. • The same unit number is assigned to a Special I/O Unit that uses more than one unit number and another Special I/O Unit.	S					page 5-38
34010000 hex	I/O Setting Check Error	There is an inconsistency between a Unit model in the Unit Configuration in the CPU Unit and the Unit model that is mounted in the Controller.	• A Unit model or Special Unit unit number in the Unit Configuration in the CPU Unit is different from the Unit model or the Special Unit unit number of the Unit that is mounted in the Controller.	S					page 5-39
64010000 hex	Impossible to Access Special Unit	An error occurred in data exchange between the CPU Unit and a Special Unit.	• The setting of the rotary switches or a DIP switch pin on a Special Unit is not correct. • An error occurred in the Special Unit. • The Unit connection is faulty. • Noise • A Unit has failed.			S			page 5-40

Event code	Event name	Meaning	Assumed cause	Level					Reference
				Maj	Prt	Min	Obs	Info	
102D 0000 hex (Ver. 1.03)	CJ-series Unit Backup Failed	The backup operation for a CJ-series Unit ended in an error.	• An error occurred in the Unit Configuration. • An error occurred for a Special Unit. • A restart is in progress for the Special Unit. • A Unit model or Special Unit unit number in the Unit Configuration in the CPU Unit is different from the Unit model or the Special Unit unit number of the Unit that is mounted in the Controller. • The CPU Unit or CJ-series Unit has failed.				S		page 5-41
102E 0000 hex (Ver. 1.03)	CJ-series Unit Restore Operation Failed	The restore operation for a CJ-series Unit ended in an error.	• An error occurred in the Unit Configuration. • An error occurred for a Special Unit. • The Unit Configuration in the backup file does not agree with the physical Unit configuration. • A restart is in progress for the Special Unit. • The restore conditions that are required by the Special Unit are not met. • The backup files are corrupted. • The CPU Unit or CJ-series Unit has failed.				S		page 5-42
3020 0000 hex (Ver. 1.02)	Unsupported Unit Setting	A setting in the Special Unit is not supported.	• A setting in the Special Unit is not supported by the CPU Unit.				S		page 5-43
8001 0000 hex	Illegal Packet Discarded	An illegal packet was received during message communications. The illegal packet was discarded.	• Noise				S		page 5-43

Errors Related to Controller Operation

Event code	Event name	Meaning	Assumed cause	Level					Reference
				Maj	Prt	Min	Obs	Info	
10200000 hex	User Program/Controller Configurations and Setup Transfer Error	The user program or Controller Configurations and Setup were not transferred correctly.	• The user program or Controller Configurations and Setup are not correct because the power supply to the Controller was interrupted during a download of the user program or the Controller Configurations and Setup. • The user program or Controller Configurations and Setup are not correct because the power supply to the Controller was interrupted during online editing. • The user program or Controller Configurations and Setup are not correct because the power supply to the Controller was interrupted during a Clear All Memory operation. • The user program or Controller Configurations and Setup are not correct because the power supply to the Controller was interrupted during a restore operation. • Non-volatile memory failed.	S					page 5-44
10210000 hex	Illegal User Program Execution ID	The user program execution IDs set in the user program and in the CPU Unit do not match.	• The user program execution IDs set in the user program and in the CPU Unit do not match. • A user program execution ID is set in the CPU Unit but not in the user program.	S					page 5-45
10240000 hex	Illegal User Program	The user program is not correct.	• The limit to the number of nesting levels for functions or function blocks was exceeded.	S					page 5-45
10250000 hex	Illegal User Program/Controller Configurations and Setup	The upper limit of the usable memory was exceeded or the user program or Controller Configurations and Setup is corrupted.	• The upper limit of the data size was exceeded. • The main memory capacity was exceeded. • Non-volatile memory is deteriorating or has failed.	S					page 5-46

Event code	Event name	Meaning	Assumed cause	Level					Reference
				Maj	Prt	Min	Obs	Info	
10270000 hex (Ver. 1.03)	Error in Starting Automatic Transfer	An error was detected in pre-execution checks for automatic transfer.	• An SD Memory Card is not inserted. • The SD Memory Card type is not correct. • The format of the SD Memory Card is not correct. • There is no autoload folder on the SD Memory Card. • There are no backup files in the autoload folder on the SD Memory Card. • Either the backup files in the autoload folder on the SD Memory Card are corrupted or required data is not in the backup files on the SD Memory Card. • The unit version of the CPU Unit to which to transfer the files is older than the unit version of the backup files on the SD Memory Card. • The model of the CPU Unit to which to transfer the files is not the same as the model of the CPU Unit of the backup files on the SD Memory Card. • Recovery was executed for the SD Memory Card. • The CPU Unit is write-protected. • The settings in the automatic transfer command file (AutoloadCommand.ini) are not correct. • Reading the data for automatic transfer failed because the SD Memory Card is faulty or not formatted correctly. • The SD Memory Card is damaged.	S					page 5-47
10280000 hex (Ver. 1.03)	Error in Executing Automatic Transfer	The automatic transfer ended in an error.	• It was not possible to read the data for automatic transfer. • The SD Memory Card was removed during an automatic transfer. • There are no backup files in the autoload folder on the SD Memory Card. • The backup files in the autoload folder on the SD Memory Card are corrupted. • The SD Memory Card is damaged.	S					page 5-49
40160000 hex	Safe Mode	The Controller started in Safe Mode.	• The power supply was turned ON to the Controller when Safe Mode was set on the DIP switch on the CPU Unit.	S					page 5-50
10230000 hex	Event Log Restoration Error	Restoring the event log failed.	• A low battery voltage prevented retention of memory during a power interruption.				S		page 5-50

Event code	Event name	Meaning	Assumed cause	Level					Reference
				Maj	Prt	Min	Obs	Info	
10260000 hex	Trace Setting Transfer Failure	The power supply was interrupted while transferring the trace settings.	• The power supply was interrupted while transferring the trace settings.				S		page 5-51
10290000 hex (Ver. 1.03)	Backup Failed to Start	An error was detected in pre-execution checks for a backup operation.	• An SD Memory Card is not inserted. • The SD Memory Card type is not correct. • The format of the SD Memory Card is not correct. • The SD Memory Card is write protected. • The *Prohibiting backing up data to the SD Memory Card* parameter is set to prohibit backing up data to an SD Memory Card. • Another backup operation is in progress. • Synchronization, online editing, or the Clear All Memory operation is in progress. • The backup was canceled by the user. • The online connection with the Sysmac Studio was disconnected. • The SD Memory Card is damaged.				S		page 5-51
102A0000 hex (Ver. 1.03)	Backup Failed	The backup operation ended in an error.	• The capacity of the SD Memory Card is insufficient. • It was not possible to save the data that was specified for backup. • The SD Memory Card was removed during a backup operation. • Failed to back up Unit or slave. • The backup was canceled by the user. • Execution of the Save Cam Table instruction or changing the CPU Unit name is in progress. • The online connection with the Sysmac Studio was disconnected. • It was not possible to save the data that was specified for backup to the computer. • The SD Memory Card is damaged.				S		page 5-53

Event code	Event name	Meaning	Assumed cause	Level					Reference
				Maj	Prt	Min	Obs	Info	
102B0000 hex (Ver. 1.03)	Restore Operation Failed to Start	An error was detected in pre-execution checks for a restore operation.	• An SD Memory Card is not inserted. • The SD Memory Card type is not correct. • The format of the SD Memory Card is not correct. • There are no backup files on the SD Memory Card. • Either the backup files on the SD Memory Card are corrupted or required data is not in the backup files on the SD Memory Card. • The unit version of the CPU Unit to which to restore the files is older than the unit version of the backup files on the SD Memory Card. • The model of the CPU Unit to which to restore the files is not the same as the model of the CPU Unit of the backup files on the SD Memory Card. • Recovery was executed for the SD Memory Card. • The CPU Unit is write-protected. • The settings in the restore command file (RestoreCommand.ini) are not correct. • A backup operation is in progress. • Synchronization, online editing, or the Clear All Memory operation is in progress. • The online connection with the Sysmac Studio was disconnected. • Reading the data for restoration failed because the SD Memory Card is faulty or not formatted correctly. • The SD Memory Card is damaged.				S		page 5-54
102C0000 hex (Ver. 1.03)	Restore Operation Failed	The restore operation ended in an error.	• It was not possible to read the data to restore. • The SD Memory Card was removed during a restore operation. • Failed to restore Unit or slave. • The SD Memory Card is damaged.				S		page 5-56
40170000 hex (Ver. 1.03)	Safe Mode	The Controller started in Safe Mode.	• The power supply was turned ON to the Controller when Safe Mode was set on the DIP switch on the CPU Unit.				S		page 5-57
80230000 hex (Ver. 1.05)	NX Message Communications Error	An error has occurred in message communications.	• The communications cable is broken. • The communications cable connector is disconnected. • The NX message communications load is high.				S		page 5-57

Event code	Event name	Meaning	Assumed cause	Level					Reference
				Maj	Prt	Min	Obs	Info	
90010000 hex	Clock Changed	The clock time was changed.	• The clock time was changed.					S	page 5-58
90020000 hex	Time Zone Changed	The time zone was changed.	• The time zone was changed.					S	page 5-58
90080000 hex	Variable Changed to TRUE with Forced Refreshing	Changing a variable to TRUE with forced refreshing was specified.	• Changing a variable to TRUE with forced refreshing was specified by the user.					S	page 5-58
90090000 hex	Variable Changed to FALSE with Forced Refreshing	Changing a variable to FALSE with forced refreshing was specified.	• Changing a variable to FALSE with forced refreshing was specified by the user.					S	page 5-59
900A0000 hex	All Forced Refreshing Cleared	Clearing all forced refreshing values was specified.	• Clearing all forced refreshing values was specified by the user.					S	page 5-59
900B0000 hex	Memory All Cleared	All memory was cleared.	• A user with Administrator rights cleared all of the memory.					S	page 5-59
900C0000 hex	Event Log Cleared	The event log was cleared.	• The event log was cleared by the user.					S	page 5-60
900F0000 hex (Ver. 1.03)	Automatic Transfer Completed	The automatic transfer was completed.	• The automatic transfer was completed.					S	page 5-60
90110000 hex	Power Turned ON	The power supply was turned ON.	• The power supply was turned ON.					S	page 5-60
90120000 hex	Power Interrupted	The power supply was interrupted.	• The power supply was interrupted.					S	page 5-61
90130000 hex	Operation Started	Operation was started.	• A command to start operation was received.					S	page 5-61
90140000 hex	Operation Stopped	Operation was stopped.	• A command to stop operation was received.					S	page 5-61
90150000 hex	Reset Executed	A reset was executed.	• A reset command was received.					S	page 5-62
90160000 hex	User Program Execution ID Write	The user program execution ID was set or changed in the CPU Unit.	• A user with Administrator rights changed the user program execution ID that is set in the CPU Unit.					S	page 5-62
90180000 hex	All Controller Errors Cleared	All current errors were cleared.	• All current errors were changed by the user.					S	page 5-62
90190000 hex	Forced Refreshing Cleared	Clearing a forced refreshing value was specified.	• Clearing a forced refreshing value was specified by the user.					S	page 5-63
901A0000 hex (Ver. 1.03)	Backup Started	A backup operation was started.	• A backup operation was started.					S	page 5-63
901B0000 hex (Ver. 1.03)	Backup Completed	The backup operation ended normally.	• The backup operation ended normally.					S	page 5-64
901C0000 hex (Ver. 1.03)	Restore Operation Started	A restore operation started.	• A restore operation started.					S	page 5-64
901D0000 hex (Ver. 1.03)	Restore Operation Completed	The restore operation ended normally.	• The restore operation ended normally.					S	page 5-65

5-2-4 Error Descriptions

This section describes the information that is given for individual errors.

Controller Error Descriptions

The items that are used to describe individual errors (events) are described in the following copy of an error table.

Event name	Gives the name of the error.			Event code	Gives the code of the error.	
Meaning	Gives a short description of the error.					
Source	Gives the source of the error.		Source details	Gives details on the source of the error.	Detection timing	Tells when the error is detected.
Error attributes	Level	Tells the level of influence on control.*1	Recovery	Gives the recovery method.*2	Log category	Tells which log the error is saved in.*3
Effects	User program	Tells what will happen to execution of the user program.*4	Operation	Provides special information on the operation that results from the error.		
Indicators	Gives the status of the built-in EtherNet/IP port and built-in EtherCAT port indicators. Indicator status is given only for errors in the EtherCAT Master Function Module and the EtherNet/IP Function Module.					
System-defined variables	Variable		Data type		Name	
	Lists the variable names, data types, and meanings for system-defined variables that provide direct error notification, that are directly affected by the error, or that contain settings that cause the error.					
Cause and correction	Assumed cause		Correction		Prevention	
	Lists the possible causes, corrections, and preventive measures for the error.					
Attached information	This is the attached information that is displayed by the Sysmac Studio or an NS-series PT.					
Precautions/ Remarks	Provides precautions, restrictions, and supplemental information. If the user can set the event level, the event levels that can be set, the recovery method, operational information, and other information is also provided.					

*1 One of the following:
Major fault: Major fault level
Partial fault: Partial fault level
Minor fault: Minor fault level
Observation
Information

*2 One of the following:
Automatic recovery: Normal status is restored automatically when the cause of the error is removed.
Error reset: Normal status is restored when the error is reset after the cause of the error is removed.
Cycle the power supply: Normal status is restored when the power supply to the Controller is turned OFF and then back ON after the cause of the error is removed.
Controller reset: Normal status is restored when the Controller is reset after the cause of the error is removed.
Depends on cause: The recovery method depends on the cause of the error.

*3 One of the following:
System: System event log
Access: Access event log

*4 One of the following:
Continues: Execution of the user program will continue.
Stops: Execution of the user program stops.
Starts: Execution of the user program starts.

Errors for Self Diagnosis

Event name	DIP Switch Setting Error			Event code	00090000 hex	
Meaning	An error was detected in the DIP switch setting.					
Source	PLC Function Module		Source details	None	Detection timing	At power ON or Controller reset
Error attributes	Level	Major fault	Recovery	Cycle the power supply.	Log category	System
Effects	User program	Stops.	Operation	Stops.*		
System-defined variables	Variable		Data type		Name	
	None		---		---	
Cause and correction	Assumed cause		Correction		Prevention	
	There is an error in the DIP switch setting.		Turn OFF all pins on the DIP switch.		Make sure that the DIP switch settings are correct.	
Attached information	Attached information 1: DIP switch readout value (00000000 hex to 0000000F hex)					
Precautions/ Remarks	None					

* For details, refer to *I/O Operation for Major Fault Level Controller Errors* on page 5-6.

Event name	Internal NJ-series Bus Check Error			Event code	000D0000 hex	
Meaning	A fatal error was detected on the internal bus.					
Source	PLC Function Module		Source details	None	Detection timing	Continuously
Error attributes	Level	Major fault	Recovery	Cycle the power supply.	Log category	System
Effects	User program	Stops.	Operation	Stops.* A connection to the Sysmac Studio may not be possible.		
System-defined variables	Variable		Data type		Name	
	None		---		---	
Cause and correction	Assumed cause		Correction		Prevention	
	Conductive material has gotten inside.		If there is conductive material nearby, blow out the CPU Unit with air.		Do not do any metal working in the vicinity of the control panel. Also, make sure that the operating environment is free of dirt and dust. Close the control panel.	
	Noise • There is data corruption in bus signals. • There is malfunctioning in bus interface circuits.		If the error occurs even after making the above correction, check the FG, and power supply lines, and other noise entry paths, and implement noise countermeasures as required.		Implement noise countermeasures.	
	The CPU Unit has failed. • The internal bus is disconnected.		If this error persists even after you make the above two corrections, replace the CPU Unit.		None	
Attached information	Attached information 1: Controller information					
Precautions/ Remarks	When this error occurs, the CPU Unit stops and the error is recorded in the event log. If cycling the power to the Controller clears the error, you will be able to see whether this error occurred by checking the event log. However, a restart is sometimes not possible depending on the error location.					

* For details, refer to *I/O Operation for Major Fault Level Controller Errors* on page 5-6.

Event name	Non-volatile Memory Life Exceeded		Event code	000E0000 hex	
Meaning	The specified number of deletions for non-volatile memory was exceeded. Or, the number of bad blocks in memory exceeded the specified value.				
Source	PLC Function Module	Source details	None	Detection timing	Continuously
Error attributes	Level: Major fault	Recovery	Cycle the power supply.	Log category	System
Effects	User program: Stops.	Operation	Stops.*		
System-defined variables	Variable	Data type	Name		
	None	---	---		
Cause and correction	Assumed cause	Correction	Prevention		
	Non-volatile memory life expired.	Replace the CPU Unit.	---		
Attached information	None				
Precautions/ Remarks	None				

* For details, refer to *I/O Operation for Major Fault Level Controller Errors* on page 5-6.

Event name	Non-volatile Memory Restored or Formatted		Event code	10010000 hex	
Meaning	An error was detected in the non-volatile memory check and file system recovery or formatting was executed. Previous files may have been deleted.				
Source	PLC Function Module	Source details	None	Detection timing	At power ON or Controller reset
Error attributes	Level: Major fault	Recovery	Cycle the power supply or reset the Controller.	Log category	System
Effects	User program: Stops.	Operation	Stops.*		
System-defined variables	Variable	Data type	Name		
	None	---	---		
Cause and correction	Assumed cause	Correction	Prevention		
	The Controller power supply was turned OFF while the BUSY indicator was lit.	Compare the project with the project on the Sysmac Studio. If they match, cycle the power supply to the Controller or reset the Controller to see if that clears the error. If the error is cleared, check that the device operates correctly. If the comparison shows a mismatch, if the error is not cleared, or if the device does not operate correctly, clear all of memory and then download the project from the Sysmac Studio again. If cycling the power supply to the Controller or resetting the Controller does not clear the error, the memory is corrupted. Replace the CPU Unit. Unexpected operation may occur and can be very dangerous if the power to the Controller is cycled or the Controller is reset before you download the project again.	Do not turn OFF the power supply while the BUSY indicator is lit.		
	The power supply to the Controller was interrupted momentarily while the BUSY indicator was lit.		Take appropriate measures to ensure that the specified power with the rated voltage and frequency is supplied in places where the power supply is unstable.		
Attached information	Attached information 1: Recovered content (00000000 hex: File system recovery successful, 00000001 hex: Formatted)				
Precautions/ Remarks	Make sure that the projects match and that the device operates correctly, or transfer the project again. If you cycle the power to the Controller or reset the Controller before you do this, unexpected operation may occur and can be very dangerous.				

* For details, refer to *I/O Operation for Major Fault Level Controller Errors* on page 5-6.

Event name	Non-volatile Memory Data Corrupted		Event code	10020000 hex	
Meaning	A file that must be in non-volatile memory is missing or corrupted.				
Source	PLC Function Module	Source details	None	Detection timing	At power ON or Controller reset
Error attributes	Level	Major fault	Recovery	Cycle the power supply or reset the Controller.	Log category	System
Effects	User program	Stops.	Operation	Stops.*	
System-defined variables	Variable	Data type	Name		
	None	---	---		
Cause and correction	Assumed cause	Correction	Prevention		
	The Controller power supply was turned OFF while the BUSY indicator was lit.	Clear all of memory and then download the project from the Sysmac Studio.	Do not turn OFF the power supply while the BUSY indicator is lit.		
	The power supply to the Controller was interrupted momentarily while the BUSY indicator was lit.		Take appropriate measures to ensure that the specified power with the rated voltage and frequency is supplied in places where the power supply is unstable.		
	The CPU Unit has failed.	If this error remains even after making the above corrections, replace the CPU Unit.	None		
Attached information	None				
Precautions/ Remarks	None				

* For details, refer to *I/O Operation for Major Fault Level Controller Errors* on page 5-6.

Event name	Main Memory Check Error			Event code	10080000 hex	
Meaning	An error was detected in the memory check of the main memory in the CPU Unit.					
Source	PLC Function Module		Source details	None	Detection timing	Continuously
Error attributes	Level	Major fault	Recovery	Cycle the power supply.	Log category	System
Effects	User program	Stops.	Operation	Stops.*		
System-defined variables	Variable		Data type		Name	
	None		---		---	
Cause and correction	Assumed cause		Correction		Prevention	
	Conductive material has gotten inside.		If there is conductive material nearby, blow out the CPU Unit with air.		Do not do any metal working in the vicinity of the control panel. Use the control panel only when it is closed.	
	Noise • Data corruption in memory • Microcomputer malfunctioning • Memory write circuit malfunctioning		If the error did not result from the above causes, cycle the power to the Controller and see if that clears the error. If the error occurs frequently, check the FG, power supply lines, and other noise entry paths, and implement noise countermeasures as required.		Implement noise countermeasures.	
	There is a software error. • Data corruption was caused by cosmic rays or radiation.		If the error did not result from the above causes, and cycling the power to the Controller or resetting the Controller does not clear the error, replace the CPU Unit.		None	
	The CPU Unit has failed. • Memory element failure • Memory peripheral circuit failure				Perform regular inspections.	
Attached information	Attached information 1: Controller information					
Precautions/ Remarks	None					

* For details, refer to *I/O Operation for Major Fault Level Controller Errors* on page 5-6.

Event name	Event Level Setting Error			Event code	100C0000 hex*1	
Meaning	The settings in the event level setting file are not correct.					
Source	PLC Function Module		Source details	None	Detection timing	At power ON or Controller reset
Error attributes	Level	Major fault	Recovery	Cycle the power supply or reset the Controller.	Log category	System
Effects	User program	Stops.	Operation	Stops.*2		
System-defined variables	Variable		Data type		Name	
	None		---		---	
Cause and correction	Assumed cause		Correction		Prevention	
	The event level settings are not correct because the power supply to the Controller was interrupted or communications with the Sysmac Studio were disconnected during a download of the event level settings.		Perform a Memory All Clear operation and then transfer the event level setting file again.		Do not interrupt the power supply to the Controller or disconnect communications with the Sysmac Studio during a download of the event level settings.	
	The event level settings are not correct because the power supply to the Controller was interrupted during a Clear All Memory operation.				Do not interrupt the power supply to the Controller during a Clear All Memory operation.	
	Non-volatile memory failed.		If the error persists even after you make the above correction, replace the CPU Unit.		None	
Attached information	None					
Precautions/ Remarks	None					

*1 This event code was added for unit version 1.03 of the CPU Unit.

*2 For details, refer to *I/O Operation for Major Fault Level Controller Errors* on page 5-6.

Event name	Real-Time Clock Stopped			Event code	00070000 hex	
Meaning	The oscillation of the real-time clock stopped. The real-time clock is set to an illegal time.					
Source	PLC Function Module		Source details	None	Detection timing	At power ON or Controller reset
Error attributes	Level	Minor fault	Recovery	Error reset	Log category	System
Effects	User program	Continues.	Operation	The System Time is not defined. The clock information recorded by CJ-series Units is also not defined.		
System-defined variables	Variable		Data type		Name	
	_CurrentTime		DATE_AND_TIME		System Time	
Cause and correction	Assumed cause		Correction		Prevention	
	The battery voltage is low.		Replace the Battery. Then adjust the real-time clock time.		Regularly replace the Battery.	
	The battery connector has come loose.		Reconnect the connector and make sure it is mated correctly. Then adjust the real-time clock time.		Check for vibration and shock.	
	The Battery is missing.		Install a Battery. Then adjust the real-time clock time.		Install a Battery.	
Attached information	None					
Precautions/ Remarks	This error is checked only when the power is turned ON. You can change the event level to the observation level. If you change the level to the observation level, recovery procedures are not required.					

Event name	Real-Time Clock Failed			Event code	00080000 hex	
Meaning	The real-time clock in the CPU Unit failed.					
Source	PLC Function Module		Source details	None	Detection timing	At power ON or Controller reset
Error attributes	Level	Minor fault	Recovery	Cycle the power supply.	Log category	System
Effects	User program	Continues.	Operation	The System Time is not defined. The clock information recorded by CJ-series Units is also not defined.		
System-defined variables	Variable		Data type		Name	
	_CurrentTime		DATE_AND_TIME		System Time	
Cause and correction	Assumed cause		Correction		Prevention	
	The CPU Unit clock has failed.		Replace the CPU Unit.		None	
Attached information	None					
Precautions/ Remarks	None					

Event name	Low Battery Voltage			Event code	000B0000 hex	
Meaning	The voltage of the Battery has dropped.					
Source	PLC Function Module		Source details	None	Detection timing	Continuously
Error attributes	Level	Minor fault	Recovery	Error reset	Log category	System
Effects	User program	Continues.	Operation	No affected		
System-defined variables	Variable		Data type		Name	
	None		---		---	
Cause and correction	Assumed cause		Correction		Prevention	
	The battery voltage is low.		Replace the Battery.		Regularly replace the Battery.	
	The battery connector has come loose.		Reconnect the connector and make sure it is mated correctly.		Check for vibration and shock.	
	The Battery is missing.		Install a Battery.		Install a Battery.	
Attached information	None					
Precautions/ Remarks	You may loose the user data the next time that the power supply is interrupted. You can change the event level to the observation level. If you change the level to the observation level, recovery procedures are not required.					

Event name	CPU Unit Overheat		Event code	000C0000 hex	
Meaning	The temperature inside the CPU Unit exceeded the specified value.				
Source	PLC Function Module	Source details	None	Detection timing	Continuously
Error attributes	Level	Minor fault*	Recovery	Cycle the power supply or reset the Controller.	Log category	System
Effects	User program	Continues.	Operation	Not affected.	
System-defined variables	Variable		Data type	Name	
	None		---	---	
Cause and correction	Assumed cause		Correction	Prevention	
	The ambient operating temperature is too high.		Make sure that the ambient operating temperature stays between 0 and 55°C. • If the dustproof label is still on top of the Unit, remove it before you use the Unit. • Provide enough space for good air flow. • Do not install the Controller above equipment that generates a large amount of heat, such as heaters, transformers, or high-capacity resistors. • If the ambient temperature exceeds 55°C, install a cooling fan or air conditioner.	Make sure that the ambient temperature stays between 0 and 55°C.	
Attached information	None				
Precautions/ Remarks	None				

* The level was changed from the observation level to the minor fault level for unit version 1.03.

Event name	Battery-backup Memory Check Error		Event code	10090000 hex	
Meaning	An error was detected in the memory check of the battery-backup memory in the CPU Unit.				
Source	PLC Function Module or Motion Control Function Module	Source details	PLC Function Module: None Motion Control Function Module: MC Common	Detection timing	At power ON or Controller reset
Error attributes	Level	Minor fault	Recovery	Error reset	Log category	System
Effects	User program	Continues.	Operation	The variables with a Retain attribute and memory for CJ-series Units in the DM, EM, and Holding Areas were corrupted. Normal user program execution or normal Unit operation may not be possible.	
System-defined variables	Variable		Data type	Name	
	_RetainFail		BOOL	Power OFF Retention Failure Flag	
Cause and correction	Assumed cause		Correction	Prevention	
	The battery voltage is low.		Replace the Battery.	Regularly replace the Battery.	
	The battery connector has come loose.		Reconnect the connector and make sure it is mated correctly.	Check for vibration and shock.	
	The Battery is missing.		Install a Battery.	Install a Battery.	
Attached information	None				
Precautions/ Remarks	After you implement the above countermeasures, set the correct data for the variables with a Retain attribute and memory for CJ-series Units in the DM, EM, and Holding Areas. You can change the event level to the observation level. If you change the level to the observation level, recovery procedures are not required.				

Event name	SD Memory Card Invalid Type			Event code	000F0000 hex	
Meaning	The current SD Memory Card is not supported.					
Source	PLC Function Module		Source details	None	Detection timing	At power ON, at Controller reset, or when SD Memory Card is inserted
Error attributes	Level	Observation	Recovery	---	Log category	System
Effects	User program	Continues.	Operation	SD PWR indicator is not lit. Power supply to SD Memory Card is stopped.		
System-defined variables	Variable		Data type		Name	
	_Card1Ready		BOOL		SD Memory Card Ready Flag	
Cause and correction	Assumed cause		Correction		Prevention	
	An SD Memory Card that is not supported was inserted into the CPU Unit.		Replace the SD Memory Card with an SD/SDHC card with a capacity of 32 GB or less.		Use an SD/SDHC card with a capacity of 32 GB or less for the SD Memory Card.	
Attached information	None					
Precautions/ Remarks	None					

Event name	SD Memory Card Life Exceeded			Event code	00100000 hex	
Meaning	The specified number of deletions for the SD Memory Card was exceeded. Or, the number of bad blocks exceeded the specified value.					
Source	PLC Function Module		Source details	None	Detection timing	At power ON, at Controller reset, or periodically
Error attributes	Level	Observation	Recovery	---	Log category	System
Effects	User program	Continues.	Operation	Not affected.		
System-defined variables	Variable		Data type		Name	
	_Card1Deteriorated		BOOL		SD Memory Card Life Warning Flag	
Cause and correction	Assumed cause		Correction		Prevention	
	The service life of the SD Memory Card was exceeded.		Back up necessary files in the SD Memory Card. Or replace the SD Memory Card.		Regularly replace the SD Memory Card.	
Attached information	None					
Precautions/ Remarks	The data on the SD Memory Card may be corrupted. Normal user program operation may not be possible. You can change the event level to the minor fault level. If you change the level to the minor fault level, the Recovery column above will be changed to “Error reset.”					

Event name	SD Memory Card Invalid Format			Event code	10030000 hex	
Meaning	The file format of the SD Memory Card is not FAT16 or FAT32.					
Source	PLC Function Module		Source details	None	Detection timing	At power ON, at Controller reset, or when SD Memory Card is inserted
Error attributes	Level	Observation	Recovery	---	Log category	System
Effects	User program	Continues.	Operation	SD PWR indicator is not lit. You can format the SD Memory Card from the Sysmac Studio.		
System-defined variables	Variable		Data type		Name	
	_Card1Ready		BOOL		SD Memory Card Ready Flag	
Cause and correction	Assumed cause		Correction		Prevention	
	The file format of the SD Memory Card inserted in the CPU Unit is not FAT16 or FAT32.		Make sure that the correct SD Memory Card is inserted in the CPU Unit. If an incorrect SD Memory Card is inserted, replace it with the correct one. If the correct SD Memory Card is inserted, format it correctly before you use it.		Use an OMRON SD Memory Card. Do not format the SD Memory Card on a computer.	
Attached information	None					
Precautions/ Remarks	None					

Event name	SD Memory Card Restored or Formatted			Event code	10040000 hex	
Meaning	An error was detected during the file system check and the file system was restored. Files may have been deleted.					
Source	PLC Function Module		Source details	None	Detection timing	At power ON or Controller reset
Error attributes	Level	Observation	Recovery	---	Log category	System
Effects	User program	Continues.	Operation	If the file is deleted, normal user program operation may not be possible.		
System-defined variables	Variable		Data type		Name	
	None		---		---	
Cause and correction	Assumed cause		Correction		Prevention	
	The Controller power supply was turned OFF while the SD BUSY indicator was lit.		Check that the correct file is on the SD Memory Card, or that the device operates correctly. If the correct file is not on the SD Memory Card, or if the device does not operate correctly, download the correct file to the SD Memory Card. Cycle the power supply to the Controller or reset the Controller and confirm that the system operates correctly.		Do not turn OFF the power supply while the SD BUSY indicator is lit.	
	The power supply to the Controller was interrupted momentarily while the SD BUSY indicator was lit.				Take appropriate measures to ensure that the specified power with the rated voltage and frequency is supplied in places where the power supply is unstable.	
	The SD Memory Card was removed while the SD PWR indicator was lit.				Do not remove the SD Memory Card while the SD PWR indicator is lit.	
	The SD Memory Card is damaged.		If this error occurs even though the above problem does not exist, replace the SD Memory Card and download the correct files to it.		None	
Attached information	None					
Precautions/ Remarks	The error is detected at power ON or at a Controller reset only when SD Memory Card diagnosis at startup is enabled. You can change the event level to the minor fault level. If you change the level to the minor fault level, the Recovery column above will be changed to “Error reset.”					

Event name	SD Memory Card Data Corrupted			Event code	10060000 hex	
Meaning	A file that must be in the SD Memory Card is missing or corrupted.					
Source	PLC Function Module		Source details	None	Detection timing	At power ON or Controller reset
Error attributes	Level	Observation	Recovery	---	Log category	System
Effects	User program	Continues.	Operation	SD PWR indicator is not lit. You can format the SD Memory Card from the Sysmac Studio. Normal user program operation may not be possible.		
System-defined variables	Variable		Data type		Name	
	_Card1Ready		BOOL		SD Memory Card Ready Flag	
Cause and correction	Assumed cause		Correction		Prevention	
	The Controller power supply was turned OFF while the SD BUSY indicator was lit.		Format the SD Memory Card and download the correct file.		Do not turn OFF the power supply while the SD BUSY indicator is lit.	
	The power supply to the Controller was interrupted momentarily while the SD BUSY indicator was lit.				Take appropriate measures to ensure that the specified power with the rated voltage and frequency is supplied in places where the power supply is unstable.	
	The SD Memory Card was removed while the SD PWR indicator was lit.				Do not remove the SD Memory Card while the SD PWR indicator is lit.	
	The SD Memory Card is damaged.		If the error cannot be cleared with the above corrections, replace the SD Memory Card with one that operates normally.		None	
Attached information	None					
Precautions/ Remarks	The error is detected at power ON or at a Controller reset only when SD Memory Card diagnosis at startup is enabled. You can change the event level to the minor fault level. If you change the level to the minor fault level, the Recovery column above will be changed to “Error reset.”					

Event name	SD Memory Card Access Power OFF Error			Event code	10070000 hex	
Meaning	The power supply to the Controller was interrupted during access to the SD Memory Card.					
Source	PLC Function Module		Source details	None	Detection timing	At power ON or Controller reset
Error attributes	Level	Observation	Recovery	---	Log category	System
Effects	User program	Continues.	Operation	Operation is controlled by the user program when the file is corrupted.		
System-defined variables	Variable		Data type		Name	
	_Card1PowerFail		BOOL		SD Memory Card Access Power Interruption Flag	
Cause and correction	Assumed cause		Correction		Prevention	
	The Controller power supply was turned OFF while the SD BUSY indicator was lit.		Check that the correct file is on the SD Memory Card, or that the device operates correctly. If the correct file is not on the SD Memory Card, or if the device does not operate correctly, download the correct file to the SD Memory Card. Cycle the power supply to the Controller or reset the Controller and confirm that the system operates correctly. When you have finished the corrections, set the SD Memory Card Access Power Interruption Flag (_Card1PowerFail) to FALSE.		Do not turn OFF the power supply while the SD BUSY indicator is lit.	
	The power supply to the Controller was interrupted momentarily while the SD BUSY indicator was lit.				Take appropriate measures to ensure that the specified power with the rated voltage and frequency is supplied in places where the power supply is unstable.	
Attached information	None					
Precautions/ Remarks	When the measure is completed, change the SD Memory Card Access Power Interruption Flag to FALSE.					

Event name	Incorrect SD Memory Card Removal		Event code	10310000 hex*	
Meaning	SD Memory Card removal processing failed.				
Source	PLC Function Module	Source details	None	Detection timing	At SD Memory Card removal
Error attributes	Level	Observation	Recovery	---	Log category	System
Effects	User program	Continues.	Operation	Not affected.	
System-defined variables	Variable		Data type	Name	
	None		---	---	
Cause and correction	Assumed cause		Correction	Prevention	
	The SD Memory Card was removed while the SD PWR indicator was lit.		Check the files on the SD Memory Card to see if they are correct. If the files on the SD Memory Card are not correct, download the correct files to the SD Memory Card.	Press the SD Memory Card power supply switch and confirm that the SD PWR indicator goes out before you remove the SD Memory Card.	
Attached information	None				
Precautions/ Remarks	None				

* This event code was added for unit version 1.02 of the CPU Unit.

Errors Related to Unit Configuration

Event name	I/O Bus Check Error			Event code	0401 0000 hex	
Meaning	An error occurred in a bus line transmission between the CPU Unit and the Units in the rack slots. Or, detection of all Special I/O Units and CPU Bus Units was not completed when the power supply to the Controller was turned ON.					
Source	PLC Function Module		Source details	I/O bus master	Detection timing	Continuously
Error attributes	Level	Major fault	Recovery	Cycle the power supply.	Log category	System
Effects	User program	Stops.	Operation	Stops.*		
System-defined variables	Variable		Data type		Name	
	None		---		---	
Cause and correction	Assumed cause		Correction		Prevention	
	The I/O Connecting Cable is disconnected or wires inside it are broken.		Make sure that the I/O cable connector is mated properly and then reconnect the connector. If the I/O cable is broken, replace it.		Make sure the cable is mated properly during operation. Check for vibration and shock.	
	Conductive material has gotten inside.		If there is conductive material nearby, blow out the Units with air.		Do not do any metal working in the vicinity of the control panel. Use the control panel only when it is closed.	
	The connector contact is faulty due to foreign material in the connector.		If foreign material is stuck to the connector, take off the connector and remove the foreign material.		Make sure that the operating environment is free of dirt and dust.	
	Noise • There is data corruption in bus signals. • There is malfunctioning in bus interface circuits.		If the error did not result from the above causes, cycle the power to the Controller and see if that clears the error. If the error occurs frequently, check the FG, power supply lines, I/O Connecting Cables, and other noise entry paths, and implement noise countermeasures as required.		Implement noise countermeasures.	
	A Unit has failed. • CPU Unit • Special I/O Unit • CPU Bus Unit • I/O Connecting Cable		If the error did not result from the above causes, and cycling the power to the Controller or resetting the Controller does not clear the error, replace the attached Unit or the CPU Unit.		Perform regular inspections.	
Attached information	None					
Precautions/ Remarks	None					

* For details, refer to *I/O Operation for Major Fault Level Controller Errors* on page 5-6.

Event name	Unsupported Unit Detected			Event code	24010000 hex	
Meaning	An unsupported CJ-series Unit or Power Supply Unit is mounted.					
Source	PLC Function Module		Source details	I/O bus master	Detection timing	At power ON or Controller reset
Error attributes	Level	Major fault	Recovery	Cycle the power supply.	Log category	System
Effects	User program	Stops.	Operation	Stops.*		
System-defined variables	Variable		Data type		Name	
	None		---		---	
Cause and correction	Assumed cause		Correction		Prevention	
	An unsupported CJ-series Unit or Power Supply Unit was detected.		Remove the unsupported CJ-series CPU Unit or Power Supply Unit and replace it with a supported one.		Use a Unit that is supported by this CPU Unit.	
Attached information	Attached information 1: Rack number where error was detected, 0 to 3 Attached information 2: Slot number where error was detected, 0 to 9 Attached information 3: Profile code that gives the Unit type					
Precautions/ Remarks	This error will not occur for unsupported Power Supply Units that are mounted on Expansion Rack. Make sure that the Power Supply Units connected to the Expansion Racks are supported before using them.					

* For details, refer to *I/O Operation for Major Fault Level Controller Errors* on page 5-6.

Event name	Too Many I/O Points			Event code	24020000 hex	
Meaning	The total number of I/O points in the connected CJ-series Units exceeds the maximum specified value of the CPU Unit.					
Source	PLC Function Module		Source details	I/O bus master	Detection timing	At power ON or Controller reset
Error attributes	Level	Major fault	Recovery	Cycle the power supply.	Log category	System
Effects	User program	Stops.	Operation	Stops.*		
System-defined variables	Variable		Data type		Name	
	None		---		---	
Cause and correction	Assumed cause		Correction		Prevention	
	The total number of I/O points in the connected CJ-series Basic I/O Units exceeds 2,560.		Set the total number of I/O points in the CJ-series Basic I/O Units to 2,560 or less.		Set the total number of I/O points in the CJ-series Basic I/O Units to 2,560 or less.	
Attached information	Attached information 1: Total number of I/O points in the CJ-series Basic I/O Units					
Precautions/ Remarks	None					

* For details, refer to *I/O Operation for Major Fault Level Controller Errors* on page 5-6.

Event name	End Cover Missing			Event code	24030000 hex	
Meaning	The End Cover is not connected to right end of the CPU Rack or an Expansion Rack.					
Source	PLC Function Module		Source details	I/O bus master	Detection timing	Continuously
Error attributes	Level	Major fault	Recovery	Cycle the power supply.	Log category	System
Effects	User program	Stops.	Operation	Stops.*		
System-defined variables	Variable		Data type		Name	
	None		---		---	
Cause and correction	Assumed cause		Correction		Prevention	
	The End Cover is not connected to right end of the CPU Rack or an Expansion Rack.		Check that the End Cover is correctly connected and firmly attached. If it is not, connect it properly.		Design a unit configuration that includes the End Cover.	
	The End Cover is not connected properly.				Confirm that End Cover is connected correctly when you assemble the Controller.	
Attached information	None					
Precautions/ Remarks	None					

* For details, refer to *I/O Operation for Major Fault Level Controller Errors* on page 5-6.

Event name	Incorrect Unit/Expansion Rack Connection			Event code	24040000 hex	
Meaning	The number of Units or Expansion Racks exceeds the maximum value specified for the CPU Unit. Or, an Interrupt Input Unit was mounted to a unsupported slot or to an Expansion Rack.					
Source	PLC Function Module		Source details	I/O bus master	Detection timing	At power ON or Controller reset
Error attributes	Level	Major fault	Recovery	Cycle the power supply.	Log category	System
Effects	User program	Stops.	Operation	Stops.*		
System-defined variables	Variable		Data type		Name	
	None		---		---	
Cause and correction	Assumed cause		Correction		Prevention	
	More than 10 Units are connected to one Rack.		Reduce the number of Units connected to the Rack to 10 or fewer.		Check the maximum number of connections allowed and design a configuration that fits within those ranges.	
	More than three Expansion Racks are connected.		Reduce the number of Expansion Racks to three or fewer.			
	More than two Interrupt Input Units are mounted.		Reduce the number of Interrupt Input Units to two or fewer.			
	An Interrupt Input Unit was mounted to a unsupported slot or to an Expansion Rack.		Mount the Interrupt Input Units to slots 0 to 4 on the CPU Rack (i.e., as one of the five Units to the right of the CPU Unit).			
Attached information	None					
Precautions/ Remarks	None					

* For details, refer to *I/O Operation for Major Fault Level Controller Errors* on page 5-6.

<table>
<tr><td>Event name</td><td colspan="3">Duplicate Unit Number</td><td>Event code</td><td colspan="2">24050000 hex</td></tr>
<tr><td>Meaning</td><td colspan="6">The same unit number is set for more than one Special I/O Unit or more than one CPU Bus Unit.</td></tr>
<tr><td>Source</td><td colspan="2">PLC Function Module</td><td>Source details</td><td>I/O bus master</td><td>Detection timing</td><td>At power ON or Controller reset</td></tr>
<tr><td>Error attributes</td><td>Level</td><td>Major fault</td><td>Recovery</td><td>Cycle the power supply.</td><td>Log category</td><td>System</td></tr>
<tr><td>Effects</td><td>User program</td><td>Stops.</td><td>Operation</td><td colspan="3">Stops.*</td></tr>
<tr><td rowspan="2">System-defined variables</td><td colspan="2">Variable</td><td colspan="2">Data type</td><td colspan="2">Name</td></tr>
<tr><td colspan="2">None</td><td colspan="2">---</td><td colspan="2">---</td></tr>
<tr><td rowspan="3">Cause and correction</td><td colspan="2">Assumed cause</td><td colspan="2">Correction</td><td colspan="2">Prevention</td></tr>
<tr><td colspan="2">The same unit number is set for more than one Special I/O Unit or more than one CPU Bus Unit.</td><td colspan="2">Check that the same unit number is not used for more than one Special I/O Unit or CPU Bus Unit by checking the rotary switches. If the same unit number is used more than once for the same Unit configuration, change the unit number.</td><td colspan="2" rowspan="2">Make sure that the same unit number is not used for more than one Special I/O Unit. Also, make sure that the same unit number is not used for more than one CPU Bus Unit.</td></tr>
<tr><td colspan="2">The same unit number is assigned to a Special I/O Unit that uses more than one unit number and another Special I/O Unit.</td><td colspan="2">Check whether a Special I/O Unit or CPU Bus Unit that uses more than one unit number is included in the configuration. If there is, check to see if one of the unit numbers assigned to it is used by another Special I/O Unit or CPU Bus Unit. If it is, change the unit number.</td></tr>
<tr><td>Attached information</td><td colspan="6">Attached information 1: Rack number where error was detected, 0 to 3
Attached information 2: Slot number where error was detected, 0 to 9
Attached information 3: Special I/O Unit: Duplicated unit number + 20 hex
CPU But Unit: Duplicated unit number + 10 hex</td></tr>
<tr><td>Precautions/ Remarks</td><td colspan="6">Check the model of the Special I/O Unit. Some Special I/O Units use up to four unit numbers.</td></tr>
</table>

* For details, refer to *I/O Operation for Major Fault Level Controller Errors* on page 5-6.

Event name	I/O Setting Check Error			Event code	3401 0000 hex	
Meaning	There is an inconsistency between a Unit model in the Unit Configuration in the CPU Unit and the Unit model that is mounted in the Controller.					
Source	PLC Function Module		Source details	I/O bus master	Detection timing	At power ON, Controller reset, or Unit Configuration and Setup transfer
Error attributes	Level	Major fault	Recovery	Cycle the power supply or reset the Controller.	Log category	System
Effects	User program	Stops.	Operation	Stops.*		
System-defined variables	Variable		Data type		Name	
	None		---		---	
Cause and correction	Assumed cause		Correction		Prevention	
	A Unit model or Special Unit unit number in the Unit Configuration in the CPU Unit is different from the Unit model or the Special Unit unit number of the Unit that is mounted in the Controller.		Correct the Unit Configuration in the CPU Unit or the physical Unit configuration so that there are no inconsistencies.		Make sure that the Unit Configuration in the CPU Unit and the physical Unit configuration are consistent.	
Attached information	Attached information 1: The lowest slot number where an error was detected on the CPU Rack: 0 to 9, When the CPU Rack is normal: 10 Attached information 2: The lowest slot number where an error was detected on Expansion Rack 1: 0 to 9, When Expansion Rack 1 is normal: 10 Attached information 3: The lowest slot number where an error was detected on Expansion Rack 2: 0 to 9, When Expansion Rack 2 is normal: 10 Attached information 4: The lowest slot number where an error was detected on Expansion Rack 3: 0 to 9, When Expansion Rack 3 is normal: 10					
Precautions/ Remarks	None					

* For details, refer to *I/O Operation for Major Fault Level Controller Errors* on page 5-6.

Event name	Impossible to Access Special Unit			Event code	64010000 hex	
Meaning	An error occurred in data exchange between the CPU Unit and a Special Unit.					
Source	PLC Function Module		Source details	CJ-series Unit	Detection timing	Continuously
Error attributes	Level	Minor fault	Recovery	Reset error, cycle power supply, or reset Controller.	Log category	System
Effects	User program	Continues.	Operation	The Special Unit stops.		
System-defined variables	Variable		Data type		Name	
	None		---		---	
Cause and correction	Assumed cause		Correction		Prevention	
	The setting of the rotary switches or a DIP switch pin on a Special Unit is not correct. • The node address is not correct. • The communications mode is not correct. • The baud rate is not correct.		Correct the setting of the rotary switches or DIP switch pin on the Special Unit. You can check the setting error on the seven-segment display on the Special Unit.		Set the rotary switches and DIP switch pins on the Special Units correctly.	
	An error occurred in the Special Unit.		Refer to the relevant manual to troubleshoot the error.		Refer to the Unit manual and use the Unit correctly.	
	The Unit connection is faulty.		Connect the Unit so that the connectors mate correctly and slide the yellow sliders on the top and on the bottom toward the back to lock them into place.		Make sure that the Units are connected correctly. Check for vibration and shock.	
	Noise • There is data corruption in bus signals.		If the error did not result from the above causes, cycle the power to the Controller and see if that clears the error. If the error occurs frequently, check the FG, power supply lines, and other noise entry paths, and implement noise countermeasures as required.		Implement noise countermeasures.	
	A Unit has failed.		If the error did not result from the above causes, and cycling the power to the Controller or resetting the Controller does not clear the error, replace the Special Unit.		Perform regular inspections.	
Attached information	Attached information 1: Special I/O Unit: Error unit number + 20 hex CPU But Unit: Error unit number + 10 hex Attached information 2: Controller information					
Precautions/ Remarks	None					

Event name	CJ-series Unit Backup Failed			Event code	102D0000 hex*	
Meaning	The backup operation for a CJ-series Unit ended in an error.					
Source	PLC Function Module		Source details	I/O bus master	Detection timing	During backup operation
Error attributes	Level	Observation	Recovery	---	Log category	System
Effects	User program	Continues.	Operation	Not affected.		
System-defined variables	Variable		Data type		Name	
	None		---		---	
Cause and correction	Assumed cause		Correction		Prevention	
	An error occurred in the Unit Configuration. (when 4 is given for attached information 1 (Error Details)).		Eliminate the error in the Unit Configuration.		Back up the data when there are no errors in the Unit Configuration.	
	An error occurred for a Special Unit. (when 2 is given for attached information 1 (Error Details))		Eliminate the error for the Special Unit.		Back up the data when there are no errors for the Special Unit.	
	A restart is in progress for the Special Unit. (when 2 is given for attached information 1 (Error Details))		Back up the data when there is no restart command for the Special Unit.		Do not restart the Special Unit when a backup operation is in progress. Do not attempt to back up data during a restart.	
	A Unit model or Special Unit unit number in the Unit Configuration in the CPU Unit is different from the Unit model or the Special Unit unit number of the Unit that is mounted in the Controller (when 5 is given for attached information 1 (Error Details)).		Correct the Unit Configuration in the CPU Unit or the physical Unit configuration so that there are no inconsistencies.		Make sure that the Unit Configuration in the CPU Unit and the physical Unit configuration are consistent when you back up the data.	
	The CPU Unit or CJ-series Unit has failed. (when 1 is given for attached information 1 (Error Details))		If none of the above causes applies, replace the CPU Unit or the CJ-series Unit.		None	
Attached information	Attached Information 1: Error Details 1: It was not possible to create the backup file. 2: Communications with a Special Unit failed. 4: The CJ-series Unit could not be detected. 5: The Unit Configuration in the CPU Unit and the physical Unit configuration are not consistent. Attached information 2: Rack number where error was detected, 0 to 3 (when 2 is given for Error Details) Attached information 3: Slot number where error was detected, 0 to 9 (when 2 is given for Error Details) Attached information 4: System Information (when 2 is given for Error Details)					
Precautions/ Remarks	None					

* This event code was added for unit version 1.03 of the CPU Unit.

Event name	CJ-series Unit Restore Operation Failed			Event code	102E0000 hex*	
Meaning	The restore operation for a CJ-series Unit ended in an error.					
Source	PLC Function Module		Source details	I/O bus master	Detection timing	During restore operation
Error attributes	Level	Observation	Recovery	---	Log category	System
Effects	User program	---	Operation	Not affected.		
System-defined variables	Variable		Data type		Name	
	None		---		---	
Cause and correction	Assumed cause		Correction		Prevention	
	An error occurred in the Unit Configuration. (when 4 is given for attached information 1 (Error Details))		Eliminate the error in the Unit Configuration.		Restore the data when there are no errors in the Unit Configuration.	
	An error occurred for a Special Unit. (when 2 is given for attached information 1 (Error Details))		Eliminate the error for the Special Unit.		Restore the data when there are no errors for the Special Unit.	
	The Unit Configuration in the backup file does not agree with the physical Unit configuration. (when 5 is given for attached information 1 (Error Details))		Make sure that the Unit Configuration in the backup file agrees with the physical Unit configuration.		Make sure that the Unit Configuration in the backup file agrees with the physical Unit configuration before you attempt to restore the data.	
	A restart is in progress for the Special Unit. (when 2 is given for attached information 1 (Error Details))		Restore the data when there is no restart command for the Special Unit.		Do not restart the Special Unit when a restore operation is in progress. Do not attempt to restore data during a restart.	
	The restore conditions that are required by the Special Unit are not met. (when 3 is given for attached information 1 (Error Details))		Check the restore conditions in the manual for the Special Unit and make sure that they are met.		Check the restore conditions in the manual for the Special Unit and make sure that they are met.	
	The backup files are corrupted. (when 3 is given for attached information 1 (Error Details))		Format the SD Memory Card with the Sysmac Studio and then place the backup file on it.		Do not remove the SD Memory Card or turn OFF the power supply while the SD BUSY indicator is lit. Replace the SD Memory Card periodically according to the write life of the SD Memory Card.	
	The CPU Unit or CJ-series Unit has failed. (when 1 is given for attached information 1 (Error Details))		If none of the above causes applies, replace the CPU Unit or the CJ-series Unit.		None	
Attached information	Attached Information 1: Error Details 1: It was not possible to read the backup file. 2: Communications with a Special Unit failed. 3: The restore operation for a Special Unit failed. 4: The CJ-series Unit could not be detected. 5: The Unit Configuration in the backup file does not agree with the physical Unit configuration. Attached information 2: Rack number where error was detected, 0 to 3 (when 2 or 3 is given for Error Details) Attached information 3: Slot number where error was detected, 0 to 9 (when 2 or 3 is given for Error Details) Attached information 4: System Information (when 2 is given for Error Details)					
Precautions/ Remarks	None					

* This event code was added for unit version 1.03 of the CPU Unit.

Event name	Unsupported Unit Setting			Event code	30200000 hex*	
Meaning	A setting in the Special Unit is not supported.					
Source	PLC Function Module		Source details	I/O bus master	Detection timing	Continuously
Error attributes	Level	Observation	Recovery	---	Log category	System
Effects	User program	Continues.	Operation	Not affected.		
System-defined variables	Variable		Data type		Name	
	None		---		---	
Cause and correction	Assumed cause		Correction		Prevention	
	A setting in the Special Unit is not supported by the CPU Unit.		Change the setting of the Special Unit where the error occurred so that all Special Unit settings are supported by the CPU Unit.		Refer to the manual for the CPU Unit and use only Special Unit settings that are supported.	
Attached information	None					
Precautions/ Remarks	None					

* This event code was added for unit version 1.02 of the CPU Unit.

Event name	Illegal Packet Discarded			Event code	80010000 hex	
Meaning	An illegal packet was received during message communications. The illegal packet was discarded.					
Source	PLC Function Module		Source details	I/O bus master	Detection timing	Continuously
Error attributes	Level	Observation	Recovery	---	Log category	System
Effects	User program	Continues.	Operation	Not affected.		
System-defined variables	Variable		Data type		Name	
	None		---		---	
Cause and correction	Assumed cause		Correction		Prevention	
	Noise • There is data corruption in bus signals.		Cycle the power to the Controller and see if this clears the error. If the error occurs frequently, check the FG, power supply lines, and other noise entry paths, and implement noise countermeasures as required.		Implement noise countermeasures.	
Attached information	None					
Precautions/ Remarks	None					

Errors Related to Controller Operation

Event name	User Program/Controller Configurations and Setup Transfer Error			Event code	10200000 hex	
Meaning	The user program or Controller Configurations and Setup were not transferred correctly.					
Source	PLC Function Module		Source details	None or I/O bus master	Detection timing	At power ON or Controller reset
Error attributes	Level	Major fault	Recovery	Cycle the power supply or reset the Controller.	Log category	System
Effects	User program	Stops.	Operation	Stops.*		
System-defined variables	Variable		Data type		Name	
	None		---		---	
Cause and correction	Assumed cause		Correction		Prevention	
	The user program or Controller Configurations and Setup are not correct because the power supply to the Controller was interrupted during a download of the user program or the Controller Configurations and Setup.		Clear all of memory and then download the project from the Sysmac Studio. If attached information is registered, cycle the power supply to the Controller and then implement the above correction.		Do not turn OFF the power supply to the Controller during a download of the user program or the Controller Configurations and Setup.	
	The user program or Controller Configurations and Setup are not correct because the power supply to the Controller was interrupted during online editing.				Do not interrupt the power supply to the Controller during online editing.	
	The user program or Controller Configurations and Setup are not correct because the power supply to the Controller was interrupted during a Clear All Memory operation.				Do not interrupt the power supply to the Controller during a Clear All Memory operation.	
	The user program or Controller Configurations and Setup are not correct because the power supply to the Controller was interrupted during a restore operation.				Do not interrupt the power supply to the Controller during a restore operation.	
	Non-volatile memory failed.		If the error persists even after you make the above correction, replace the CPU Unit.		None	
Attached information	Attached Information 1: Cause Details None: Power was interrupted during a download, during online editing, or during restoration. Downloading/Predownloading: For other causes, the timing of error occurrence (during download or during download preparations) is given.					
Precautions/ Remarks	None					

* For details, refer to *I/O Operation for Major Fault Level Controller Errors* on page 5-6.

Event name	Illegal User Program Execution ID			Event code	10210000 hex	
Meaning	The user program execution IDs set in the user program and in the CPU Unit do not match.					
Source	PLC Function Module		Source details	None	Detection timing	At user program download, power ON, or Controller reset
Error attributes	Level	Major fault	Recovery	Cycle the power supply or reset the Controller.	Log category	System
Effects	User program	Stops.	Operation	Stops.*		
System-defined variables	Variable		Data type		Name	
	None		---		---	
Cause and correction	Assumed cause		Correction		Prevention	
	The user program execution IDs set in the user program and in the CPU Unit do not match.		Set the same user program execution ID in the user program and CPU Unit.		Set the same user program execution ID in the user program and CPU Unit. Keep a record of the user program execution IDs set in the user program and in the CPU Unit. They are not displayed.	
	A user program execution ID is set in the CPU Unit but not in the user program.		If user program execution ID is not set in the user program, clear the user program execution ID set in the CPU Unit by clearing all memory in the CPU Unit.			
Attached information	None					
Precautions/ Remarks	None					

* For details, refer to *I/O Operation for Major Fault Level Controller Errors* on page 5-6.

Event name	Illegal User Program			Event code	10240000 hex	
Meaning	The user program is not correct.					
Source	PLC Function Module		Source details	None	Detection timing	At download, power ON, or Controller reset
Error attributes	Level	Major fault	Recovery	Cycle the power supply or reset the Controller.	Log category	System
Effects	User program	Stops.	Operation	Stops.*		
System-defined variables	Variable		Data type		Name	
	None		---		---	
Cause and correction	Assumed cause		Correction		Prevention	
	The limit to the number of nesting levels for functions or function blocks was exceeded.		Find the location in the user program that exceeds the limit to the number of nesting levels for functions or function blocks and reduce the number of nesting levels to within the limit. Then, download the user program again.		Write the user program so that the limit to the number of nesting levels for functions or function blocks is not exceeded. Use the program check on the Sysmac Studio to confirm that the limit to the number of nesting levels is not exceeded.	
Attached information	None					
Precautions/ Remarks	None					

* For details, refer to *I/O Operation for Major Fault Level Controller Errors* on page 5-6.

<table>
<tr><td>Event name</td><td colspan="3">Illegal User Program/Controller Configurations and Setup</td><td>Event code</td><td colspan="2">10250000 hex</td></tr>
<tr><td>Meaning</td><td colspan="6">The upper limit of the usable memory was exceeded or the user program or Controller Configurations and Setup is corrupted.</td></tr>
<tr><td>Source</td><td colspan="2">PLC Function Module</td><td>Source details</td><td>None</td><td>Detection timing</td><td>At download, power ON, or Controller reset</td></tr>
<tr><td>Error attributes</td><td>Level</td><td>Major fault</td><td>Recovery</td><td>Cycle the power supply or reset the Controller.</td><td>Log category</td><td>System</td></tr>
<tr><td>Effects</td><td>User program</td><td>Stops.</td><td>Operation</td><td colspan="3">Stops.*</td></tr>
<tr><td rowspan="2">System-defined variables</td><td colspan="2">Variable</td><td colspan="2">Data type</td><td colspan="2">Name</td></tr>
<tr><td colspan="2">None</td><td colspan="2">---</td><td colspan="2">---</td></tr>
<tr><td rowspan="4">Cause and correction</td><td colspan="2">Assumed cause</td><td colspan="2">Correction</td><td colspan="2">Prevention</td></tr>
<tr><td colspan="2">The upper limit of the data size was exceeded.</td><td colspan="2">If an event on restrictions on the number of items used occurred at the same time as this event, correct the user program and settings so that the number of items used is not exceeded and then download the data again.</td><td colspan="2" rowspan="3">None</td></tr>
<tr><td colspan="2">The main memory capacity was exceeded.</td><td colspan="2">If an event on restrictions on the number of items used did not occur at the same time as this event, perform the Clear All Memory operation, cycle the power supply, and then confirm that this event was cleared. If it was cleared, reduce the size of the project, e.g., by sharing programming, and then download the project again.</td></tr>
<tr><td colspan="2">Non-volatile memory is deteriorating or has failed.</td><td colspan="2">If this error persists even after you implement the above two corrections, replace the CPU Unit.</td></tr>
<tr><td>Attached information</td><td colspan="6">None</td></tr>
<tr><td>Precautions/ Remarks</td><td colspan="6">None</td></tr>
</table>

* For details, refer to *I/O Operation for Major Fault Level Controller Errors* on page 5-6.

Event name	Error in Starting Automatic Transfer			Event code	10270000 hex*1	
Meaning	An error was detected in pre-execution checks for automatic transfer.					
Source	PLC Function Module		Source details	None	Detection timing	At power ON
Error attributes	Level	Major fault	Recovery	Cycle the power supply or reset the Controller.	Log category	System
Effects	User program	Stops.	Operation	Stops.*2		
System-defined variables	Variable		Data type		Name	
	None		---		---	
Cause and correction	Assumed cause		Correction		Prevention	
	An SD Memory Card is not inserted.		Insert an SD Memory Card.		Insert an SD Memory Card.	
	The SD Memory Card type is not correct.		Replace the SD Memory Card with an SD or SDHC card.		Use an SD or SDHC card.	
	The format of the SD Memory Card is not correct.		Format the SD Memory Card with the Sysmac Studio and then create an autoload folder and place the backup files in it.		Use a formatted SD Memory Card, create an autoload folder on the SD Memory Card, and place the backup files in it. Also, do not remove the SD Memory Card or turn OFF the power supply while the SD BUSY indicator is lit.	
	There is no autoload folder on the SD Memory Card.		Create an autoload folder on the SD Memory Card and place the backup files in it.			
	There are no backup files in the autoload folder on the SD Memory Card.		Place the backup files in the autoload folder on the SD Memory Card.			
	Either the backup files in the autoload folder on the SD Memory Card are corrupted or required data is not in the backup files on the SD Memory Card.		Replace the backup files in the autoload folder on the SD Memory Card. If this error occurs again even after replacing the files, create the backup files again and place them in the autoload folder.			
	The unit version of the CPU Unit to which to transfer the files is older than the unit version of the backup files on the SD Memory Card.		Replace the CPU Unit with a CPU Unit that has a unit version that is the same as or newer than the unit version of the CPU that was used to create the backup files. Or, place the backup files with the correct unit version for the CPU Unit in the autoload folder.		Make sure that the unit version of the CPU Unit and the unit version of the backup files are compatible.	

Cause and correction	The model of the CPU Unit to which to transfer the files is not the same as the model of the CPU Unit of the backup files on the SD Memory Card.	Replace the CPU Unit with a CPU Unit that has the same model as the CPU Unit that was used to create the backup files. Or, place the backup files with the same model of CPU Unit in the autoload folder.	Make sure that the model of the CPU Unit is the same as the model of the CPU Unit that was used to create the backup files.
	Recovery was executed for the SD Memory Card.	If there are no backup files or no automatic transfer command file in the autoload folder, place the files in the folder again.	None
	The CPU Unit is write-protected.	If you use automatic transfers, select the *Do not use* Option for the *Write protection at startup* setting of the CPU Unit.	If you use automatic transfers, select the *Do not use* Option for the *Write protection at startup* setting of the CPU Unit.
	The settings in the automatic transfer command file (AutoloadCommand.ini) are not correct.	Make sure that the required files are set to “Yes” in the automatic transfer command file.	Make sure that the required files are set to “Yes” in the automatic transfer command file.
	Reading the data for automatic transfer failed because the SD Memory Card is faulty or not formatted correctly.	Perform the same corrective measures as for when the format of the SD Memory Card is not correct or the SD Memory Card is damaged.	Perform the same preventive measures as for the following events: SD Memory Card Invalid Format or Faulty SD Memory Card.
	The SD Memory Card is damaged.	If none of the above causes applies, replace the SD Memory Card.	Do not remove the SD Memory Card or turn OFF the power supply while the SD BUSY indicator is lit. Or, replace the SD Memory Card periodically according to the write life of the SD Memory Card.
Attached information	Attached Information 1: Error Details 0001 hex: An SD Memory Card is not inserted. 0002 hex: The SD Memory Card is faulty, the format of the SD Memory Card is not correct, or the SD Memory Card is not the correct type of card. 0004 hex: Recovery was executed for the SD Memory Card. 0101 hex: There is no autoload folder on the SD Memory Card. 0102 hex: There are no backup files in the autoload folder on the SD Memory Card. 0103 hex: The backup files are corrupted. 0104 hex: The contents of the automatic transfer command file are not correct. 0105 hex: The required transfer data is not in the backup file. 0201 hex: The unit version of the CPU Unit is old. 0202 hex: The model numbers of the CPU Unit are not the same. 0203 hex: The CPU Unit is write-protected. 0301 hex: Reading data for automatic transfer failed or the SD Memory Card is faulty.		
Precautions/ Remarks	None		

*1 This event code was added for unit version 1.03 of the CPU Unit.

*2 For details, refer to *I/O Operation for Major Fault Level Controller Errors* on page 5-6.

Event name	Error in Executing Automatic Transfer			Event code	10280000 hex*1	
Meaning	The automatic transfer ended in an error.					
Source	PLC Function Module		Source details	None	Detection timing	At power ON
Error attributes	Level	Major fault	Recovery	Cycle the power supply or reset the Controller.	Log category	System
Effects	User program	Stops.	Operation	Stops.*2		
System-defined variables	Variable		Data type		Name	
	None		---		---	
Cause and correction	Assumed cause		Correction		Prevention	
	It was not possible to read the data for automatic transfer.		Format the SD Memory Card with the Sysmac Studio and then create an autoload folder and place the backup files in it.		Do not remove the SD Memory Card or turn OFF the power supply while the SD BUSY indicator is lit. Replace the SD Memory Card periodically according to the write life of the SD Memory Card.	
	The SD Memory Card was removed during an automatic transfer.		Insert an SD Memory Card that contains the backup files in an autoload folder, and then cycle the power supply to execute the automatic transfer again.		Do not remove the SD Memory Card during the automatic transfer.	
	There are no backup files in the autoload folder on the SD Memory Card.		Create an autoload folder in the SD Memory Card and store the backup files in it.		Use a formatted SD Memory Card, create an autoload folder in the SD Memory Card, and store the backup files in the folder. Do not turn OFF the power supply or remove the SD Memory Card while the SD BUSY indicator is lit.	
	The backup files in the autoload folder on the SD Memory Card are corrupted.		Store the backup files in the autoload folder again. If this error occurs again even after replacing the files, create the backup files again and place them in the autoload folder.			
	The SD Memory Card is damaged.		If none of the above causes applies, replace the SD Memory Card.		Do not remove the SD Memory Card or turn OFF the power supply while the SD BUSY indicator is lit. Replace the SD Memory Card periodically according to the write life of the SD Memory Card.	
Attached information	Attached Information 1: Error Details 0001 hex: The SD Memory Card was removed. 0102 hex: There are no backup files in the autoload folder on the SD Memory Card. 0103 hex: The backup files are corrupted. 0301 hex: Reading data for automatic transfer failed or the SD Memory Card is damaged.					
Precautions/ Remarks	None					

*1 This event code was added for unit version 1.03 of the CPU Unit.

*2 For details, refer to *I/O Operation for Major Fault Level Controller Errors* on page 5-6.

Event name	Safe Mode			Event code	40160000 hex	
Meaning	The Controller started in Safe Mode.					
Source	PLC Function Module		Source details	None	Detection timing	At power ON or Controller reset
Error attributes	Level	Major fault	Recovery	Cycle the power supply or reset the Controller.	Log category	System
Effects	User program	Stops.	Operation	Stops.*		
System-defined variables	Variable		Data type		Name	
	None		---		---	
Cause and correction	Assumed cause		Correction		Prevention	
	The power supply was turned ON to the Controller when Safe Mode was set on the DIP switch on the CPU Unit.		---		---	
Attached information	None					
Precautions/ Remarks	If the Controller is started when the CPU Unit is in Safe Mode, the user program is not executed even if the startup mode is set to RUN mode.					

* For details, refer to *I/O Operation for Major Fault Level Controller Errors* on page 5-6.

Event name	Event Log Restoration Error			Event code	10230000 hex	
Meaning	Restoring the event log failed.					
Source	PLC Function Module		Source details	None	Detection timing	At power ON or Controller reset
Error attributes	Level	Observation	Recovery	---	Log category	System
Effects	User program	Starts.	Operation	Not affected. However, the past event log cannot be checked.		
System-defined variables	Variable		Data type		Name	
	None		---		---	
Cause and correction	Assumed cause		Correction		Prevention	
	A low battery voltage prevented retention of memory during a power interruption.		Replace the Battery.		Replace the battery periodically.	
Attached information	Attached information 1: Error Details (0: Failure to restore all categories of logs, 1: Failure to restore system event log, 2: Failure to restore access event log, 100: Failure to restore user-defined event log)					
Precautions/ Remarks	None					

Event name	Trace Setting Transfer Failure			Event code	10260000 hex	
Meaning	The power supply was interrupted while transferring the trace settings.					
Source	PLC Function Module		Source details	None	Detection timing	At power ON or Controller reset
Error attributes	Level	Observation	Recovery	Cycle the power supply or reset the Controller.	Log category	System
Effects	User program	Continues.	Operation	Not affected.		
System-defined variables	Variable		Data type		Name	
	None		---		---	
Cause and correction	Assumed cause		Correction		Prevention	
	The power supply was interrupted while transferring the trace settings.		Transfer the trace settings again.		Do not interrupt the power supply while transferring the trace settings.	
Attached information	None					
Precautions/ Remarks	All trace settings are initialized when this error occurs.					

Event name	Backup Failed to Start			Event code	10290000 hex*	
Meaning	An error was detected in pre-execution checks for a backup operation.					
Source	PLC Function Module		Source details	None	Detection timing	When backup is specified by the user
Error attributes	Level	Observation	Recovery	---	Log category	System
Effects	User program	Continues.	Operation	Not affected.		
System-defined variables	Variable		Data type		Name	
	None		---		---	
Cause and correction	Assumed cause		Correction		Prevention	
	An SD Memory Card is not inserted.		Insert an SD Memory Card.		Insert an SD Memory Card.	
	The SD Memory Card type is not correct.		Replace the SD Memory Card with an SD or SDHC card.		Use an SD or SDHC card.	
	The format of the SD Memory Card is not correct.		Format the SD Memory Card with the Sysmac Studio.		Use a formatted SD Memory Card. Also, do not remove the SD Memory Card or turn OFF the power supply while the SD BUSY indicator is lit.	
	The SD Memory Card is write protected.		Remove write protection from the SD Memory Card.		Make sure that the SD Memory Card is not write protected.	
	The *Prohibiting backing up data to the SD Memory Card* parameter is set to prohibit backing up data to an SD Memory Card.		Change the setting of the *Prohibiting backing up data to the SD Memory Card* parameter to enable backing up data to an SD Memory Card.		Set the *Prohibiting backing up data to the SD Memory Card* parameter to enable backing up data to an SD Memory Card.	
	Another backup operation is in progress.		Wait for the other backup operation to end and then perform the backup operation again.		Do not attempt to perform other backup operation during a backup operation.	
	Synchronization, online editing, or the Clear All Memory operation is in progress.		Wait for the synchronization, online editing, or the Clear All Memory operation to end and then perform the backup operation again.		Do not attempt to perform a backup operation during a synchronization, online editing, or the Clear All Memory operation.	
	The backup was canceled by the user.		None		None	
	The online connection with the Sysmac Studio was disconnected.		Check the cable connections. Go offline and then go back online and execute the backup again.		Check the cable to see if it is disconnected or broken. Make sure the cable is connected properly.	

Cause and correction	The SD Memory Card is damaged.	If none of the above causes applies, replace the SD Memory Card.	Do not remove the SD Memory Card or turn OFF the power supply while the SD BUSY indicator is lit. Replace the SD Memory Card periodically according to the write life of the SD Memory Card.
Attached information	Attached information 1: Operation type 0101 hex: Controller to SD Memory Card for switch operation on front of CPU Unit 0102 hex: Controller to SD Memory Card for system variable operation 0103 hex: Controller to SD Memory Card for Sysmac Studio operation 0201 hex: Controller to computer Attached Information 2: Error Details 0001 hex: An SD Memory Card is not inserted. 0002 hex: The SD Memory Card is faulty, the format of the SD Memory Card is not correct, or the SD Memory Card is not the correct type of card. 0003 hex: The SD Memory Card is write protected. 0204 hex: SD Memory Card backup is prohibited. 0205 hex: Another backup operation is in progress. 0206 hex: Synchronization, online editing, or the Clear All Memory operation is in progress. 0207 hex: A prohibited character is used in the directory name that is specified in the system-defined variable. 0401 hex: The backup was canceled by the user. 0501 hex: The online connection with the Sysmac Studio was disconnected.		
Precautions/ Remarks	None		

* This event code was added for unit version 1.03 of the CPU Unit.

Event name	Backup Failed			Event code	102A0000 hex*	
Meaning	The backup operation ended in an error.					
Source	PLC Function Module		Source details	None	Detection timing	During backup operation
Error attributes	Level	Observation	Recovery	---	Log category	System
Effects	User program	Continues.	Operation	Not affected.		
System-defined variables	Variable		Data type		Name	
	None		---		---	
Cause and correction	Assumed cause		Correction		Prevention	
	The capacity of the SD Memory Card is insufficient.		Replace the SD Memory Card for one with sufficient available space.		Use an SD Memory Card that has sufficient available space.	
	It was not possible to save the data that was specified for backup.		Perform the backup operation again when no data write operation to the CPU Unit is in progress.		Do not write to the CPU Unit when a backup operation is in progress.	
	The SD Memory Card was removed during a backup operation.		Insert an SD Memory Card.		Insert an SD Memory Card.	
	Failed to back up Unit or slave.		Refer to the corrections for the following events: CJ-series Unit Backup Failed (102D0000 hex) or EtherCAT Slave Backup Failed (102F0000 hex).		Refer to the prevention information for the following events: CJ-series Unit Backup Failed (102D0000 hex) or EtherCAT Slave Backup Failed (102F0000 hex).	
	The backup was canceled by the user.		None		None	
	Execution of the Save Cam Table instruction or changing the CPU Unit name is in progress.		Perform the operation after execution of the Save Cam Table instruction or changing the CPU Unit name is completed.		Do not perform a backup during execution of the Save Cam Table instruction or while changing the CPU Unit name.	
	The online connection with the Sysmac Studio was disconnected.		Check the cable connections. Go offline and then go back online and execute the backup again.		Check the cable to see if it is disconnected or broken. Make sure the cable is connected properly.	
	It was not possible to save the data that was specified for backup to the computer.		Increase the available space on the hard disk on the computer.		Make sure there is sufficient space available on the hard disk before you perform a backup.	
	The SD Memory Card is damaged.		If none of the above causes applies, replace the SD Memory Card.		Do not remove the SD Memory Card or turn OFF the power supply while the SD BUSY indicator is lit. Replace the SD Memory Card periodically according to the write life of the SD Memory Card.	
Attached information	Attached information 1: Operation type 0101 hex: Controller to SD Memory Card for switch operation on front of CPU Unit 0102 hex: Controller to SD Memory Card for system variable operation 0103 hex: Controller to SD Memory Card for Sysmac Studio operation 0201 hex: Controller to computer Attached Information 2: Error Details 0001 hex: The SD Memory Card was removed. 0005 hex: There is not sufficient space available on the SD Memory Card. 0206 hex: Execution of the Save Cam Table instruction or changing the CPU Unit name is in progress. 0302 hex: Saving the backup data failed or the SD Memory Card is faulty. 0304 hex: The Unit or slave could not be backed up. 0401 hex: The backup was canceled by the user. 0501 hex: The online connection with the Sysmac Studio was disconnected. 0502 hex: It was not possible to save the data that was specified for backup to the computer.					
Precautions/ Remarks	None					

* This event code was added for unit version 1.03 of the CPU Unit.

Event name	Restore Operation Failed to Start		Event code	102B0000 hex*	
Meaning	An error was detected in pre-execution checks for a restore operation.				
Source	PLC Function Module	Source details	None	Detection timing	When restoring data is specified by the user
Error attributes	Level: Observation		Recovery: ---	Log category	System
Effects	User program: ---		Operation: Not affected.		
System-defined variables	Variable		Data type	Name	
	None		---	---	
Cause and correction	Assumed cause		Correction	Prevention	
	An SD Memory Card is not inserted.		Insert an SD Memory Card.	Insert an SD Memory Card.	
	The SD Memory Card type is not correct.		Replace the SD Memory Card with an SD or SDHC card.	Use an SD or SDHC card.	
	The format of the SD Memory Card is not correct.		Format the SD Memory Card with the Sysmac Studio and then place the backup files on it.	Use a formatted SD Memory Card and place the backup files on it. Also, do not remove the SD Memory Card or turn OFF the power supply while the SD BUSY indicator is lit.	
	There are no backup files on the SD Memory Card.		Place the backup files in the specified folder on the SD Memory Card.		
	Either the backup files on the SD Memory Card are corrupted or required data is not in the backup files on the SD Memory Card.		Create the backup files again.		
	The unit version of the CPU Unit to which to restore the files is older than the unit version of the backup files on the SD Memory Card.		Replace the CPU Unit with a CPU Unit that has a unit version that is the same as or newer than the unit version of the CPU Unit that was used to create the backup files. Or, specify backup files with the correct unit version for the CPU Unit.	Make sure that the unit version of the CPU Unit and the unit version of the backup files are compatible.	
	The model of the CPU Unit to which to restore the files is not the same as the model of the CPU Unit of the backup files on the SD Memory Card.		Replace the CPU Unit with a CPU Unit that has the same model as the CPU Unit that was used to create the backup files. Or, specify backup files with the correct model for the CPU Unit.	Make sure that the model of the CPU Unit is the same as the model of the CPU Unit that was used to create the backup files.	
	Recovery was executed for the SD Memory Card.		If there are no backup files or no restore command file in the specified folder on the SD Memory Card, place the files in the folder again.	None	
	The CPU Unit is write-protected.		If you use the restore function, select the *Do not use* Option for the *Write protection at startup* setting of the CPU Unit.	If you use the restore function, select the *Do not use* Option for the *Write protection at startup* setting of the CPU Unit.	
	The settings in the restore command file (RestoreCommand.ini) are not correct.		Make sure that the required files are set to “Yes” in the restore command file.	Make sure that the required files are set to “Yes” in the restore command file.	
	A backup operation is in progress.		Wait for the backup operation to end and then perform the restore operation again.	Do not attempt to perform a restore operation during a backup operation.	
	Synchronization, online editing, or the Clear All Memory operation is in progress.		Wait for the synchronization, online editing, or the Clear All Memory operation to end and then perform the restore operation again.	Do not attempt to perform a restore operation during a synchronization, online editing, or the Clear All Memory operation.	
	The online connection with the Sysmac Studio was disconnected.		Check the cable connections. Go offline and then go back online and execute the backup again.	Check the cable to see if it is disconnected or broken. Make sure the cable is connected properly.	
	Reading the data for restoration failed because the SD Memory Card is faulty or not formatted correctly.		Perform the same corrective measures as for when the format of the SD Memory Card is not correct or the SD Memory Card is damaged.	Perform the same preventive measures as for the following events: SD Memory Card Invalid Format or Faulty SD Memory Card.	

Cause and correction	The SD Memory Card is damaged.	If none of the above causes applies, replace the SD Memory Card.	Do not remove the SD Memory Card or turn OFF the power supply while the SD BUSY indicator is lit. Replace the SD Memory Card periodically according to the write life of the SD Memory Card.
Attached information	Attached information 1: Operation type 0101 hex: SD Memory Card to Controller for switch operation on front of CPU Unit 0201 hex: Computer to Controller Attached Information 2: Error Details 0001 hex: An SD Memory Card is not inserted. 0002 hex: The SD Memory Card is faulty, the format of the SD Memory Card is not correct, or the SD Memory Card is not the correct type of card. 0004 hex: Recovery was executed for the SD Memory Card. 0102 hex: There are no backup files. 0103 hex: The backup files are corrupted. 0104 hex: The contents of the restore command file are not correct. 0105 hex: The required transfer data is not in the backup file. 0201 hex: The unit version of the CPU Unit is old. 0202 hex: The model numbers of the CPU Unit are not the same. 0203 hex: The CPU Unit is write-protected. 0205 hex: Another backup operation is in progress. 0206 hex: Synchronization, online editing, or the Clear All Memory operation is in progress. 0301 hex: Reading data for restoration failed or the SD Memory Card is faulty. 0501 hex: The online connection with the Sysmac Studio was disconnected.		
Precautions/ Remarks	None		

* This event code was added for unit version 1.03 of the CPU Unit.

<table>
<tr><td>Event name</td><td colspan="3">Restore Operation Failed</td><td>Event code</td><td colspan="2">102C0000 hex*</td></tr>
<tr><td>Meaning</td><td colspan="6">The restore operation ended in an error.</td></tr>
<tr><td>Source</td><td colspan="2">PLC Function Module</td><td>Source details</td><td>None</td><td>Detection timing</td><td>During restore operation</td></tr>
<tr><td>Error attributes</td><td>Level</td><td>Observation</td><td>Recovery</td><td>---</td><td>Log category</td><td>System</td></tr>
<tr><td>Effects</td><td>User program</td><td>---</td><td>Operation</td><td colspan="3">Not affected.</td></tr>
<tr><td rowspan="2">System-defined variables</td><td colspan="2">Variable</td><td colspan="2">Data type</td><td colspan="2">Name</td></tr>
<tr><td colspan="2">None</td><td colspan="2">---</td><td colspan="2">---</td></tr>
<tr><td rowspan="5">Cause and correction</td><td colspan="2">Assumed cause</td><td colspan="2">Correction</td><td colspan="2">Prevention</td></tr>
<tr><td colspan="2">It was not possible to read the data to restore.</td><td colspan="2">Format the SD Memory Card with the Sysmac Studio and then place the backup files on it.</td><td colspan="2">Do not remove the SD Memory Card or turn OFF the power supply while the SD BUSY indicator is lit. Replace the SD Memory Card periodically according to the write life of the SD Memory Card.</td></tr>
<tr><td colspan="2">The SD Memory Card was removed during a restore operation.</td><td colspan="2">Insert an SD Memory Card that contains the backup files, and then execute the restore operation again.</td><td colspan="2">Do not remove the SD Memory Card during the restore operation.</td></tr>
<tr><td colspan="2">Failed to restore Unit or slave.</td><td colspan="2">Refer to the corrections for the following events: CJ-series Unit Restore Operation Failed (102E0000 hex) or EtherCAT Slave Restore Operation Failed (10300000 hex).</td><td colspan="2">Refer to the prevention information for the following events: CJ-series Unit Restore Operation Failed (102E0000 hex) or EtherCAT Slave Restore Operation Failed (10300000 hex).</td></tr>
<tr><td colspan="2">The SD Memory Card is damaged.</td><td colspan="2">If none of the above causes applies, replace the SD Memory Card.</td><td colspan="2">Do not remove the SD Memory Card or turn OFF the power supply while the SD BUSY indicator is lit. Replace the SD Memory Card periodically according to the write life of the SD Memory Card.</td></tr>
<tr><td>Attached information</td><td colspan="6">Attached information 1: Operation type
0101 hex: SD Memory Card to Controller for switch operation on front of CPU Unit
0201 hex: Computer to Controller
Attached Information 2: Error Details
0001 hex: The SD Memory Card was removed.
0102 hex: There are no backup files.
0103 hex: The backup files are corrupted.
0301 hex: Reading data for restoration failed or the SD Memory Card is faulty.
0303 hex: The Unit or slave could not be restored.</td></tr>
<tr><td>Precautions/ Remarks</td><td colspan="6">None</td></tr>
</table>

* This event code was added for unit version 1.03 of the CPU Unit.

Event name	Safe Mode			Event code	40170000 hex*	
Meaning	The Controller started in Safe Mode.					
Source	PLC Function Module		Source details	None	Detection timing	At power ON or Controller reset
Error attributes	Level	Observation	Recovery	---	Log category	System
Effects	User program	Stops.	Operation	---		
System-defined variables	Variable		Data type		Name	
	None		---		---	
Cause and correction	Assumed cause		Correction		Prevention	
	The power supply was turned ON to the Controller when Safe Mode was set on the DIP switch on the CPU Unit.		---		---	
Attached information	None					
Precautions/ Remarks	If the Controller is started when the CPU Unit is in Safe Mode, the CPU Unit will start in PROGRAM mode even if the startup mode is set to RUN mode.					

* This event code was added for unit version 1.03 of the CPU Unit.

Event name	NX Message Communications Error			Event code	80230000 hex*	
Meaning	An error has occurred in message communications.					
Source	PLC Function Module EtherCAT Master Function Module EtherNet/IP Function Module		Source details	None	Detection timing	During NX message communications
Error attributes	Level	Observation	Recovery	---	Log category	System
Effects	User program	Continues.	Operation	---		
System-defined variables	Variable		Data type		Name	
	None		---		---	
Cause and correction	Assumed cause		Correction		Prevention	
	The communications cable is broken.		Check the communications cable and replace it if it is broken.		Check the communications cable to see if it is operating properly.	
	The communications cable connector is disconnected.		Reconnect the connector and make sure it is mated correctly.		Make sure the communications cable is connected properly.	
	The NX message communications load is high.		Reduce the number of times that instructions are used to send NX messages. Or, increase the value of the *TimeOut* input variable to the instruction. If more than one copy of the Sysmac Studio is connected, reduce the frequency of simultaneous operations.		Reduce the number of times that instructions are used to send NX messages. Or, increase the value of the *TimeOut* input variable to the instruction. If more than one copy of the Sysmac Studio is connected, reduce the frequency of simultaneous operations.	
Attached information	Attached information 1: Controller information Attached Information 2: Type of communications 0: NX bus 1: EtherCAT 65,535: Unit internal communications (routing)					
Precautions/ Remarks	None					

* This event code was added for unit version 1.05 of the CPU Unit.

Event name	Clock Changed			Event code	90010000 hex	
Meaning	The clock time was changed.					
Source	PLC Function Module		Source details	None	Detection timing	Commands from user
Error attributes	Level	Information	Recovery	---	Log category	Access
Effects	User program	Continues.	Operation	Not affected.		
System-defined variables	Variable		Data type		Name	
	_CurrentTime		DATE_AND_TIME		System Time	
Cause and correction	Assumed cause		Correction		Prevention	
	The clock time was changed.		---		---	
Attached information	Attached information 1: Time before change					
Precautions/ Remarks	Clock changes by the Set Time instruction (SetTime) are not recorded in the event log. The time stamp for this event will be for the time after the change.					

Event name	Time Zone Changed			Event code	90020000 hex	
Meaning	The time zone was changed.					
Source	PLC Function Module		Source details	None	Detection timing	When download-ing
Error attributes	Level	Information	Recovery	---	Log category	Access
Effects	User program	Continues.	Operation	Not affected.		
System-defined variables	Variable		Data type		Name	
	_CurrentTime		DATE_AND_TIME		System Time	
Cause and correction	Assumed cause		Correction		Prevention	
	The time zone was changed.		---		---	
Attached information	None					
Precautions/ Remarks	None					

Event name	Variable Changed to TRUE with Forced Refreshing			Event code	90080000 hex	
Meaning	Changing a variable to TRUE with forced refreshing was specified.					
Source	PLC Function Module		Source details	None	Detection timing	Commands from user
Error attributes	Level	Information	Recovery	---	Log category	Access
Effects	User program	Continues.	Operation	Operation is performed according to the forced refreshing values.		
System-defined variables	Variable		Data type		Name	
	None		---		---	
Cause and correction	Assumed cause		Correction		Prevention	
	Changing a variable to TRUE with forced refreshing was specified by the user.		---		---	
Attached information	None					
Precautions/ Remarks	None					

Event name	Variable Changed to FALSE with Forced Refreshing			Event code	90090000 hex	
Meaning	Changing a variable to FALSE with forced refreshing was specified.					
Source	PLC Function Module		Source details	None	Detection timing	Commands from user
Error attributes	Level	Information	Recovery	---	Log category	Access
Effects	User program	Continues.	Operation	Operation is performed according to the forced refreshing values.		
System-defined variables	Variable		Data type		Name	
	None		---		---	
Cause and correction	Assumed cause		Correction		Prevention	
	Changing a variable to FALSE with forced refreshing was specified by the user.		---		---	
Attached information	None					
Precautions/ Remarks	None					

Event name	All Forced Refreshing Cleared			Event code	900A0000 hex	
Meaning	Clearing all forced refreshing values was specified.					
Source	PLC Function Module		Source details	None	Detection timing	Commands from user
Error attributes	Level	Information	Recovery	---	Log category	Access
Effects	User program	Continues.	Operation	Forced refreshing values are all cleared and operation is performed according to the user program.		
System-defined variables	Variable		Data type		Name	
	None		---		---	
Cause and correction	Assumed cause		Correction		Prevention	
	Clearing all forced refreshing values was specified by the user.		---		---	
Attached information	None					
Precautions/ Remarks	None					

Event name	Memory All Cleared			Event code	900B0000 hex	
Meaning	All of memory was cleared.					
Source	PLC Function Module		Source details	None	Detection timing	Commands from user
Error attributes	Level	Information	Recovery	---	Log category	Access
Effects	User program	---	Operation	Operation returns to the factory state.		
System-defined variables	Variable		Data type		Name	
	None		---		---	
Cause and correction	Assumed cause		Correction		Prevention	
	A user with Administrator rights cleared all of the memory.		---		---	
Attached information	None					
Precautions/ Remarks	None					

Event name	Event Log Cleared			Event code	900C 0000 hex	
Meaning	The event log was cleared.					
Source	PLC Function Module		Source details	None	Detection timing	Commands from user
Error attributes	Level	Information	Recovery	---	Log category	Access
Effects	User program	Continues.	Operation	Not affected.		
System-defined variables	Variable		Data type		Name	
	None		---		---	
Cause and correction	Assumed cause		Correction		Prevention	
	The event log was cleared by the user.		---		---	
Attached information	Attached information 1: Cleared events	0: All log categories were cleared 1: The system event log was cleared. 2: The access event log was cleared. 100: The user-defined event log was cleared.				
Precautions/ Remarks	None					

Event name	Automatic Transfer Completed			Event code	900F 0000 hex*	
Meaning	The automatic transfer was completed.					
Source	PLC Function Module		Source details	None	Detection timing	At power ON
Error attributes	Level	Information	Recovery	---	Log category	System
Effects	User program	Continues.	Operation	Operation starts according to the Controller Configurations and Setup data that was automatically transferred.		
System-defined variables	Variable		Data type		Name	
	None		---		---	
Cause and correction	Assumed cause		Correction		Prevention	
	The automatic transfer was completed.		---		---	
Attached information	None					
Precautions/ Remarks	None					

* This event code was added for unit version 1.03 of the CPU Unit.

Event name	Power Turned ON			Event code	9011 0000 hex	
Meaning	The power supply was turned ON.					
Source	PLC Function Module		Source details	None	Detection timing	At power ON
Error attributes	Level	Information	Recovery	---	Log category	System
Effects	User program	----	Operation	Operation starts.		
System-defined variables	Variable		Data type		Name	
	None		---		---	
Cause and correction	Assumed cause		Correction		Prevention	
	The power supply was turned ON.		---		---	
Attached information	None					
Precautions/ Remarks	None					

Event name	Power Interrupted			Event code	90120000 hex	
Meaning	The power supply was interrupted.					
Source	PLC Function Module		Source details	None	Detection timing	At power interruption
Error attributes	Level	Information	Recovery	---	Log category	System
Effects	User program	Stops.	Operation	All operations stops.		
System-defined variables	Variable		Data type		Name	
	None		---		---	
Cause and correction	Assumed cause		Correction		Prevention	
	The power supply was interrupted.		---		---	
Attached information	None					
Precautions/ Remarks	None					

Event name	Operation Started			Event code	90130000 hex	
Meaning	Operation was started.					
Source	PLC Function Module		Source details	None	Detection timing	When changing to RUN mode
Error attributes	Level	Information	Recovery	---	Log category	System
Effects	User program	Starts.	Operation	User program execution starts.		
System-defined variables	Variable		Data type		Name	
	None		---		---	
Cause and correction	Assumed cause		Correction		Prevention	
	A command to start operation was received.		---		---	
Attached information	None					
Precautions/ Remarks	None					

Event name	Operation Stopped			Event code	90140000 hex	
Meaning	Operation was stopped.					
Source	PLC Function Module		Source details	None	Detection timing	When changing to PROGRAM mode
Error attributes	Level	Information	Recovery	---	Log category	System
Effects	User program	Stops.	Operation	User program execution stops.		
System-defined variables	Variable		Data type		Name	
	None		---		---	
Cause and correction	Assumed cause		Correction		Prevention	
	A command to stop operation was received.		---		---	
Attached information	None					
Precautions/ Remarks	None					

Event name	Reset Executed			Event code	90150000 hex	
Meaning	A reset was executed.					
Source	PLC Function Module		Source details	None	Detection timing	Commands from user
Error attributes	Level	Information	Recovery	---	Log category	Access
Effects	User program	---	Operation	Operation is started after a reset is executed.		
System-defined variables	Variable		Data type		Name	
	None		---		---	
Cause and correction	Assumed cause		Correction		Prevention	
	A reset command was received.		---		---	
Attached information	None					
Precautions/ Remarks	None					

Event name	User Program Execution ID Write			Event code	90160000 hex	
Meaning	The user program execution ID was set or changed in the CPU Unit.					
Source	PLC Function Module		Source details	None	Detection timing	When download-ing
Error attributes	Level	Information	Recovery	---	Log category	Access
Effects	User program	Continues.	Operation	Not affected.		
System-defined variables	Variable		Data type		Name	
	None		---		---	
Cause and correction	Assumed cause		Correction		Prevention	
	A user with Administrator rights changed the user program execution ID that is set in the CPU Unit.		---		---	
Attached information	None					
Precautions/ Remarks	None					

Event name	All Controller Errors Cleared			Event code	90180000 hex	
Meaning	All current errors were cleared.					
Source	PLC Function Module		Source details	None	Detection timing	Commands from user
Error attributes	Level	Information	Recovery	---	Log category	Access
Effects	User program	Continues.	Operation	Clearing all errors for which the causes have been removed.		
System-defined variables	Variable		Data type		Name	
	None		---		---	
Cause and correction	Assumed cause		Correction		Prevention	
	The user cleared all current errors.		---		---	
Attached information	None					
Precautions/ Remarks	None					

Event name	Forced Refreshing Cleared		Event code	90190000 hex	
Meaning	Clearing a forced refreshing value was specified.				
Source	PLC Function Module	Source details	None	Detection timing	Commands from user
Error attributes	Level: Information	Recovery	---	Log category	Access
Effects	User program: Continues.	Operation	Forced refreshing values are cleared and operation is performed according to the user program.		
System-defined variables	Variable	Data type	Name		
	None	---	---		
Cause and correction	Assumed cause	Correction	Prevention		
	Clearing a forced refreshing value was specified by the user.	---	---		
Attached information	None				
Precautions/ Remarks	None				

Event name	Backup Started		Event code	901A0000 hex*	
Meaning	A backup operation was started.				
Source	PLC Function Module	Source details	None	Detection timing	At start of backup operation
Error attributes	Level: Information	Recovery	---	Log category	System
Effects	User program: Continues.	Operation	Not affected.		
System-defined variables	Variable	Data type	Name		
	None	---	---		
Cause and correction	Assumed cause	Correction	Prevention		
	A backup operation was started.	---	---		
Attached information	Attached information 1: Operation type 0101 hex: Controller to SD Memory Card for switch operation on front of CPU Unit 0102 hex: Controller to SD Memory Card for system variable operation 0103 hex: Controller to SD Memory Card for Sysmac Studio operation 0201 hex: Controller to computer				
Precautions/ Remarks	None				

* This event code was added for unit version 1.03 of the CPU Unit.

Event name	Backup Completed			Event code	901B0000 hex*	
Meaning	The backup operation ended normally.					
Source	PLC Function Module		Source details	None	Detection timing	At end of normal backup operation
Error attributes	Level	Information	Recovery	---	Log category	System
Effects	User program	Continues.	Operation	Not affected.		
System-defined variables	Variable		Data type		Name	
	None		---		---	
Cause and correction	Assumed cause		Correction		Prevention	
	The backup operation ended normally.		---		---	
Attached information	Attached information 1: Operation type 0101 hex: Controller to SD Memory Card for switch operation on front of CPU Unit 0102 hex: Controller to SD Memory Card for system variable operation 0103 hex: Controller to SD Memory Card for Sysmac Studio operation 0201 hex: Controller to computer					
Precautions/ Remarks	None					

* This event code was added for unit version 1.03 of the CPU Unit.

Event name	Restore Operation Started			Event code	901C0000 hex*	
Meaning	A restore operation started.					
Source	PLC Function Module		Source details	None	Detection timing	At start of restore operation
Error attributes	Level	Information	Recovery	---	Log category	System
Effects	User program	---	Operation	Not affected.		
System-defined variables	Variable		Data type		Name	
	None		---		---	
Cause and correction	Assumed cause		Correction		Prevention	
	A restore operation started.		---		---	
Attached information	Attached information 1: Operation type 0101 hex: SD Memory Card to Controller for switch operation on front of CPU Unit 0201 hex: Computer to Controller					
Precautions/ Remarks	None					

* This event code was added for unit version 1.03 of the CPU Unit.

Event name	Restore Operation Completed			Event code	901D0000 hex*	
Meaning	The restore operation ended normally.					
Source	PLC Function Module		Source details	None	Detection timing	At end of normal restore operation
Error attributes	Level	Information	Recovery	---	Log category	System
Effects	User program	---	Operation	Operation does not start after the completion of a restore operation. To start operation according to the restored user program and settings, turn OFF the power supply to the Controller, turn OFF all pins on the DIP switch on the CPU Unit, and then turn ON the power supply again.		
System-defined variables	Variable		Data type		Name	
	None		---		---	
Cause and correction	Assumed cause		Correction		Prevention	
	The restore operation ended normally.		---		---	
Attached information	Attached information 1: Operation type 0101 hex: SD Memory Card to Controller for switch operation on front of CPU Unit 0201 hex: Computer to Controller					
Precautions/ Remarks	None					

* This event code was added for unit version 1.03 of the CPU Unit.

5-2-5 Troubleshooting Errors That Are Not in the CPU Unit

Input Units

No.	Abnormal condition	Cause	Correction
1	None of the inputs turn ON and the operation indicators do not light.	1. The external input power is not supplied.	Supply suitable input power.
		2. The external input power supply voltage is low.	Maintain the external input power supply voltage within the rating.
		3. Loose screws on the terminal block	Tighten the screws.
		4. Faulty contact on the terminal block or connectors	Replace the terminal block or connector.
2	None of the inputs turn ON, but the operation indicators are lit.	Faulty circuits in the Input Unit	Replace the Input Unit.
3	None of the inputs turn OFF.	Faulty input circuits	Replace the Input Unit.
4	A specific input does not turn ON.	1. Faulty input device	Replace the input device.
		2. Input wiring is broken.	Check the input wiring.
		3. Loose screws on the terminal block	Tighten the screws.
		4. Faulty contact on the terminal block or connectors	Replace the terminal block or connector.
		5. The external input ON time is too short or the input response time is too long.	Adjust the input device or correct the setting of the input response time.
		6. Faulty input circuits	Replace the Input Unit.
		7. An input bit is used in an Out instruction in the user program.	Correct the user program.
5	A specific input does not turn OFF.	1. Faulty input circuits	Replace the Input Unit.
		2. An input bit is used in an Out instruction in the user program.	Correct the user program.
		3. The leakage current or residual voltage is too large.	Replace the external load or add a dummy resistor.
		4. More than one power supply is used and unwanted current paths exist.	Check the external circuits.
6	The input bits turns ON and OFF irregularly.	1. The external input power supply voltage is low or unstable.	Maintain the external input power supply voltage within the rating.
		2. Malfunction caused by noise	Implement noise countermeasures. • Attach a surge suppressor. • Install an isolation transformer. • Use a shielded cable between the Input Unit and the load. • Check the setting of the input response time.
		3. Loose terminal block	Tighten the screws.
		4. Faulty contact on the terminal block or connectors	Replace the terminal block or connector.

No.	Abnormal condition	Cause	Correction
7	Abnormal operation occurs for the input points for the same common (8 or 16 points).	1. Loose screws on the common terminal	Tighten the screws.
		2. Faulty contact on the terminal block or connectors	Replace the terminal block or connector.
		3. Faulty circuits in the Input Unit	Replace the Input Unit.
		4. Faulty CPU Unit	Replace the CPU Unit.
8	The input operation indicators do not light even though operation is normal.	Faulty LEDs or LED circuits	Replace the Input Unit.

Output Units

No.	Abnormal condition	Cause	Correction
1	None of the outputs turn ON.	1. The load power is not supplied.	Supply power.
		2. The load power supply voltage is low.	Maintain the power supply voltage within the rating.
		3. Loose screws on the terminal block	Tighten the screws.
		4. Faulty contact on the terminal block or connectors	Replace the terminal block or connector.
		5. The fuse in the Output Unit has burned out due to overcurrent, e.g., from a load short-circuit. (You can confirm the fuse status on a fuse indicator for some Output Units.	Replace the Unit.
		6. Faulty contact on Unit connector	Replace the Output Unit.
		7. Faulty output circuits	Replace the Output Unit.
		8. Load short-circuit protection has operated. (You can confirm this on an indicator.)	Check the load. Check the output wiring.
2	None of the outputs turn OFF.	Faulty output circuits	Replace the Output Unit.
3	A specific output does not turn ON and the operation indicator does not light.	1. The output ON time is too short in the user program.	Correct the user program to make a longer output ON time.
		2. The output bit is used in more than one Out instruction in the user program.	Correct the user program so that only one Out instruction controls the output bit.
		3. Faulty output circuits	Replace the Output Unit.
4	A specific output does not turn ON, but the operation indicator is lit.	1. Faulty output device	Replace the device.
		2. Output wiring is broken.	Check the output wiring.
		3. Loose screws on the terminal block	Tighten the screw.
		4. Faulty contact on the terminal block or connectors	Replace the terminal block or connector.
		5. The relay is faulty for a Relay Output Unit.	Replace the Output Unit.
		6. Faulty output circuits	Replace the Output Unit.
5	A specific output does not turn OFF, but the operation indicator is not lit.	1. The output relay is faulty for a Relay Output Unit.	Replace the Output Unit.
		2. The leakage current or residual voltage prevents resetting.	Replace the external load or add a dummy resistor.

No.	Abnormal condition	Cause	Correction
6	A specific output does not turn OFF and the operation indicator is lit.	1. The output bit is used in more than one Out instruction in the user program.	Correct the user program so that only one Out instruction controls the output bit.
		2. Faulty output circuits	Replace the Output Unit.
7	The output turns ON and OFF irregularly.	1. The load power supply voltage is low or unstable.	Maintain the load power supply voltage within the rating.
		2. The output bit is used in more than one Out instruction in the user program.	Correct the user program so that only one Out instruction controls the output bit.
		3. Malfunction caused by noise	Implement noise countermeasures. • Attach a surge suppressor. • Install an isolation transformer. • Use a shielded cable between the Output Unit and the load.
		4. Loose terminal block	Tighten the screws.
		5. Faulty contact on the terminal block or connectors	Replace the terminal block or connector.
8	Abnormal operation occurs for the output points for the same common (8 or 16 points).	1. Loose screws on the common terminal	Tighten the screws.
		2. Faulty contact on the terminal block or connectors	Replace the terminal block or connector.
		3. The fuse in the Output Unit has burned out due to overcurrent, e.g., from a load short-circuit.	Replace the Output Unit.
		4. Faulty circuits in the Output Unit	Replace the Output Unit.
		5. Faulty CPU Unit	Replace the CPU Unit.
		6. Load short-circuit protection has operated. (You can confirm this on an indicator.)	Check the load. Check the output wiring.
9	The output operation indicators do not light even though operation is normal.	Faulty LEDs or LED circuits	Replace the Unit.
10	The ERR indicator (load short-circuit alarm) is lit and the output is OFF.	The load is short-circuited externally or disconnected.	Refer to *A-4-1 Load Short-circuit Protection and Line Disconnection Detection for CJ1W-OD202*.

6

Inspection and Maintenance

This section describes the required inspections and maintenance. It also describes the service lives and replacement procedures for the Battery and Power Supply Units.

6-1 Periodic Maintenance and Inspection 6-2
6-1-1 Periodic Inspection 6-2
6-1-2 Unit Replacement Precautions 6-3
6-2 Replacing the Battery 6-4
6-2-1 Battery Replacement 6-4
6-2-2 Operation without a Battery 6-7

6-1 Periodic Maintenance and Inspection

Daily or periodic inspections are required in order to maintain the Controller's functions in peak operating condition.

6-1-1 Periodic Inspection

Although the major components in NJ-series Controllers have an extremely long life time, they can deteriorate under improper environmental conditions. Periodic inspections are thus required to ensure that the required conditions are being kept.

Inspection is recommended at least once every six months to a year, but more frequent inspections will be necessary in adverse environments.

Take immediate steps to correct the situation if any of the conditions in the following table are not met.

Periodic Inspection Points

No.	Item	Inspection	Criteria	Action
1	Source Power Supply	Check for voltage fluctuations at the power supply terminals.	The voltage must be within the allowable voltage fluctuation range. 85 to 264 VAC (+10%/−15%)	Use a voltage tester to check the power supply at the terminals. Take necessary steps to bring voltage fluctuations within limits.
2	I/O Power Supply	Check for voltage fluctuations at the I/O terminals.	Voltages must be within specifications for each Unit.	Use a voltage tester to check the I/O power supply at the terminals. Take necessary steps to bring voltage fluctuations within limits.
3	Ambient environment	Check the ambient temperature. (Inside the control panel if the Controller is in a control panel.)	0 to 55°C	Use a thermometer to check the temperature and ensure that the ambient temperature remains within the allowed range of 0 to 55°C.
		Check the ambient humidity. (Inside the control panel if the Controller is in a control panel.)	Relative humidity must be 10% to 90% with no condensation.	Use a hygrometer to check the humidity and ensure that the ambient humidity remains between 10% and 90%. Make sure that condensation does not occur due to rapid changes in temperature.
		Check that the Controller is not in direct sunlight.	Not in direct sunlight	Protect the Controller if necessary.
		Check for accumulation of dirt, dust, salt, metal powder, etc.	No accumulation	Clean and protect the Controller if necessary.
		Check for water, oil, or chemical sprays hitting the Controller.	No spray	Clean and protect the Controller if necessary.
		Check for corrosive or flammable gases in the area of the Controller.	No corrosive or flammable gases	Check by smell or use a sensor.
		Check the level of vibration or shock.	Vibration resistance and shock resistance must be within specifications.	Install cushioning or shock absorbing equipment if necessary.
		Check for noise sources near the Controller.	No significant noise sources	Either separate the Controller and noise source or protect the Controller.

No.	Item	Inspection	Criteria	Action
4	Installation and wiring	Check that each Unit is connected and locked to the next Unit securely.	No looseness	Press the connectors together completely and lock them with the sliders.
		Check that cable connectors are fully inserted and locked.	No looseness	Correct any improperly installed connectors.
		Check for loose screws in external wiring.	No looseness	Tighten loose screws with a Phillips-head screwdriver.
		Check crimp connectors in external wiring.	Adequate spacing between connectors	Check visually and adjust if necessary.
		Check for damaged external wiring cables.	No visible damage	Check visually and replace cables if necessary.
5	User-serviceable parts	Check whether the battery has reached its service life. CJ1W-BAT01	Service life expectancy is 5 years at 25°C. (From 0.75 to 5 years depending on model, and ambient temperature.)	Replace the battery when its service life has passed even if a battery error has not occurred. (Battery life depends upon the model, and ambient conditions.)

Tools Required for Inspections

● Required Tools

- Slotted and Phillips-head screwdrivers
- Voltage tester or digital voltmeter
- Industrial alcohol and clean cotton cloth

● Tools Required Occasionally

- Oscilloscope
- Thermometer and hygrometer (humidity meter)

6-1-2 Unit Replacement Precautions

Check the following after replacing any faulty Unit.

- Do not replace a Unit until the power is turned OFF.
- Check the new Unit to make sure that there are no errors.
- If you return a faulty Unit for repair, describe the problem in as much detail as possible, enclose this description with the Unit, and return the Unit to your OMRON representative.
- For poor contact, take a clean cotton cloth, soak the cloth in industrial alcohol, and carefully wipe the contacts clean. Be sure to remove any lint prior to remounting the Unit.

Precautions for Correct Use

- If you replaced the CPU Unit, transfer the user program and the variables with a Retain attribute (i.e., variables retained during power interruptions) that are required at startup, before you start operation. Unexpected accidents may occur depending on the relation between the user program and the status of variables retained during power interruptions.
- Routing tables, network parameters, and CPU Bus Unit system settings are stored in the CPU Unit. Be sure to reload this data if you replace the CPU Unit.
- If you replace a slave or Unit, refer to operation manual for the slave or Unit for information on the data required for individual slaves or Units and redo the necessary settings.

6-2 Replacing the Battery

The Battery in the NJ-series CPU Unit must be replaced periodically as preventative maintenance. (The Battery is a backup power supply for the CPU Unit's internal clock and the variables that are retained during power interruptions.) This section describes how to replace the Battery.

6-2-1 Battery Replacement

Purpose of the Battery

The Battery maintains the CPU Unit internal clock and the variables retained during power interruptions while the main power supply is OFF. If the Battery is not installed or Battery voltage drops too low, the internal clock will stop and the variables that are retained for power interruptions will be lost when the main power supply goes OFF.

Battery Service Life and Replacement Period

Model	Approx. maximum lifetime	Approx. minimum lifetime*	Approx. typical lifetime*
NJ501-□□□□	5 years	1.1 years	5 years
NJ301-□□□□	5 years	2 years	5 years

* The minimum lifetime is the memory backup time at an ambient temperature of 55°C. The typical lifetime is the memory backup time at an ambient temperature of 25°C.

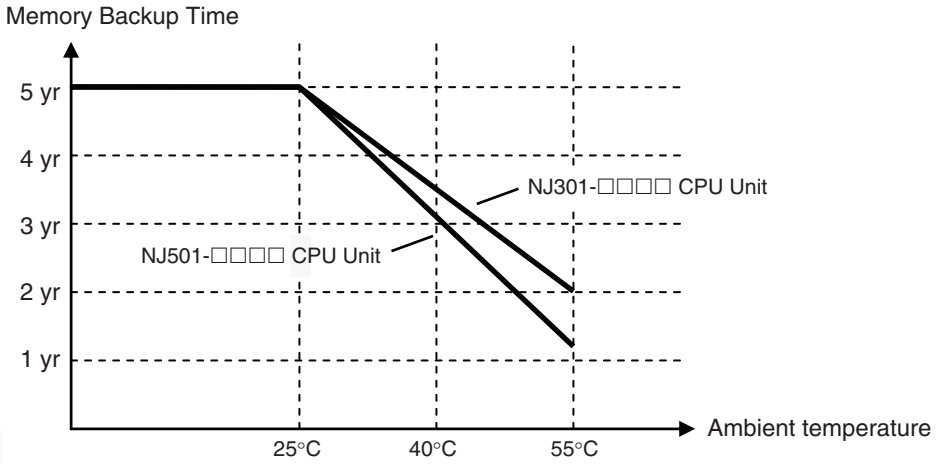

* This graphic is for reference only.

Low Battery Indicators

If the Controller Setup has been set to detect a low-battery error, the ERROR indicator on the front of the CPU Unit will flash when the battery is nearly discharged.

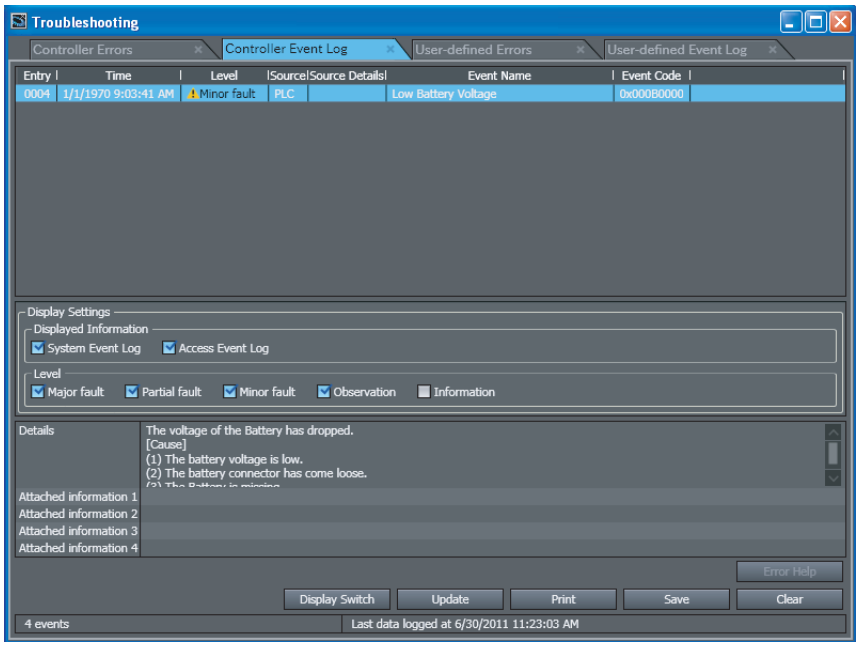

If the ERROR indicator flashes, connect the Sysmac Studio, and then check the CPU Unit's Battery connection if the Sysmac Studio shows a Low Battery Voltage, Battery-backup Memory Check Error, or Clock Oscillator Stopped event. If the Battery is properly connected, replace the Battery with a new one as soon as possible.

Once a low-battery error has been detected, it will take 5 days (at an ambient temperature of 25°C) before the battery fails if power has been supplied at least once a day. Clock data and variables that are retained during power interruptions can be retained by ensuring that the CPU Unit power is not turned OFF until the Battery has been replaced.

Precautions for Correct Use

The Battery will loose its charge faster at high ambient temperatures.

● Replacement Battery

Use the CJ1W-BAT01 Battery Set.

Precautions for Correct Use

Be sure to install a replacement Battery within two years of the production date shown on the Battery label.

Production Date

Manufactured in June 2008.

Replacement Procedure

Use the following procedure to replace the battery when the previous battery has become completely discharged.

Precautions for Safe Use

We recommend replacing the battery with the power OFF to prevent the CPU Unit's sensitive internal components from being damaged by static electricity. The battery can be replaced without turning OFF the power supply. To do so, always touch a grounded piece of metal to discharge static electricity from your body before starting the procedure.

After replacing the Battery, connect the Sysmac Studio and clear the Low Battery Voltage event.

1 Turn OFF the power supply to the Controller.

If the CPU Unit has not been ON, turn it ON for at least five minutes and then turn it OFF.

Additional Information

If power is not turned ON for at least five minutes before replacing the battery, the capacitor that backs up memory when the battery is removed will not be fully charged and memory may be lost before the new battery is inserted.

2 Open the compartment on the upper left of the CPU Unit and carefully draw out the battery.

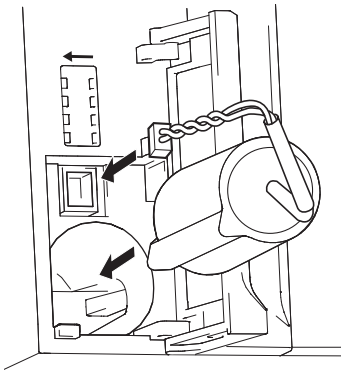

Precautions for Safe Use

- Before you replace the Battery, you must first supply power to the Controller for at least 5 minutes, and then you must complete this procedure within five minutes at 25°C after turning OFF the power to the CPU Unit to ensure memory backup.
- Never short-circuit the battery terminals; never charge the battery; never disassemble the battery; and never heat or incinerate the battery. Doing any of these may cause the battery to leak, heat, ignite, or rupture.
- Never use a battery that has been dropped on the floor or otherwise subject to shock. It may leak.
- UL standards require that batteries be replaced by experienced technicians. Always place an experienced technician in charge or battery replacement.
- Turn ON the power after replacing the battery for a CPU Unit that has been unused for a long time. Leaving the CPU Unit unused again without turning ON the power even once after the battery is replaced may result in a shorter battery life.

Additional Information

The Low Battery Voltage event is cleared automatically the next time the Controller is turned ON after replacing the Battery.

6-2-2 Operation without a Battery

NJ-series CPU Units do not support a battery-free operation function such as CJ-series CPU Units. If a Battery is not connected or the Battery voltage is too low, the following operation occurs.

- A battery voltage drop, battery-backed-up memory check error, and clock oscillation stopping are detected.
- The system-defined variable *_RetainFail* (Power Retention Failure Flag) will be TRUE.

● Retaining or Not Retaining Data in the CPU Unit

Data in the CPU Unit will be retained or not retained as described in the following table according to whether there is a Battery.

<table>
<tr><th colspan="4" rowspan="2">Type of data</th><th colspan="2">Power turned ON</th></tr>
<tr><th>Battery</th><th>No Battery</th></tr>
<tr><td colspan="4">User program</td><td colspan="2" rowspan="2">Values before power interruption will be retained by the built-in non-volatile memory.</td></tr>
<tr><td colspan="4">Controller Configurations and Setup</td></tr>
<tr><td colspan="4">Event log</td><td>Values before power interruption will be retained.</td><td>Values before power interruption will not be retained.</td></tr>
<tr><td colspan="4">Clock data</td><td>Correct values</td><td>Illegal value</td></tr>
<tr><td rowspan="6">Values of variables</td><td colspan="3">No Retain attribute</td><td>Initial values*</td><td>Initial values*</td></tr>
<tr><td colspan="3">Retain attribute</td><td>Values before power interruption will be retained.</td><td>Initial values*</td></tr>
<tr><td rowspan="4">AT (allocated memory) specification</td><td colspan="2">Non-retained areas: CIO and Work Areas</td><td>Initial values*</td><td>Initial values*</td></tr>
<tr><td rowspan="2">Retained areas: DM Area</td><td>Words allocated to Special Units (and device variables for Special Units)</td><td rowspan="3">Values before power interruption will be retained.</td><td rowspan="3">Initial values*</td></tr>
<tr><td>Words that are not allocated to Special Units</td></tr>
<tr><td colspan="2">Retained areas: Holding and EM Areas</td></tr>
<tr><td colspan="2" rowspan="2">CJ-series Unit memory</td><td colspan="2">Non-retained areas: CIO and Work Areas</td><td>Cleared to zeros.</td><td>Cleared to zeros.</td></tr>
<tr><td colspan="2">Retained areas: Holding, DM, and EM Areas</td><td>Values before power interruption will be retained.</td><td>Unstable</td></tr>
</table>

* If the initial value setting is blank, the initial value for the data type is used. For example, the initial value of BOOL data is FALSE and the initial value of integer data is 0. Refer to the *NJ-series CPU Unit Software User's Manual* (Cat. No. W501) for details on the initial values.

App

Appendices

The appendices provide the specifications of the Basic I/O Units, Unit dimensions, load short-circuit protection detection, line disconnection detection, and measures for EMC Directives.

A-1 Specifications A-3

A-2 Specifications of Basic I/O Units A-4

A-2-1 Overview of Units A-4
A-2-2 Basic I/O Units A-6
A-2-3 Precautions on Contact Output Units A-53
A-2-4 Connecting Connector-Terminal Block Conversion Units and I/O Relay Terminals A-55

A-3 Dimensions A-90

A-3-1 NJ-series CPU Units A-90
A-3-2 NJ-series Power Supply Units A-91
A-3-3 CJ-series Basic I/O Units A-92
A-3-4 B7A Interface Unit A-95
A-3-5 CJ-series I/O Control Unit and I/O Interface Unit A-95
A-3-6 SD Memory Card A-95

A-4 Load Short-circuit Protection and Line Disconnection Detection for CJ-series Basic I/O Units A-96

A-4-1 Load Short-circuit Protection and Line Disconnection Detection for CJ1W-OD202 . . . . . A-96
A-4-2 Load Short-circuit Protection for CJ1W-OD204/OD212/OD232/MD232 . . . . A-99

A-5 EMC Directive Measures for Relay Outputs A-101

A-6 System-defined Variables Related to Hardware A-103

A-6-1 System-defined Variables for the Overall NJ-series Controller (No Category) A-103
A-6-2 PLC Function Module, Category Name: _PLC A-109
A-6-3 PLC Function Module, Category Name: _CJB A-109
A-6-4 Meanings of Error Status Bits A-111

A-7 Specifications for Individual System-defined Variables A-112

A-7-1 System-defined Variables for the Overall NJ-series Controller (No Category) A-112
A-7-2 PLC Function Module, Category Name: _PLC A-119
A-7-3 PLC Function Module, Category Name: _CJB A-120

A-8 Version Information A-124
A-8-1 Relationship between Unit Versions of CPU Units and Sysmac Studio Versions A-124
A-8-2 Functions That Were Added or Changed for Each Unit Version A-126
A-8-3 Performance Improvements for Unit Version Upgrades A-128

A-1 Specifications

This section gives the specifications of the NJ-series CPU Units.

Item		NJ501-□□□□	NJ301-□□□□
Enclosure		Mounted in a panel	
Grounding method		Ground to less than 100 Ω.	
Dimensions (height × depth × width)		90 mm × 90 mm × 90 mm	
Weight		550 g (including the End Cover)	
Current consumption		5 VDC 1.90 A (including SD Memory Card and End Cover)	
Operating environment	**Ambient operating temperature**	0 to 55°C	
	Ambient operating humidity	10% to 90% (with no condensation)	
	Atmosphere	Must be free from corrosive gases.	
	Ambient storage temperature	–20 to 75°C (excluding battery)	
	Altitude	2,000 m max.	
	Pollution degree	2 or less: Conforms to JIS B 3502 and IEC 61131-2.	
	Noise immunity	2 kV on power supply line (Conforms to IEC 61000-4-4.)	
	Overvoltage category	Category II: Conforms to JIS B 3502 and IEC 61131-2.	
	EMC immunity level	Zone B	
	Vibration resistance	Conforms to IEC 60068-2-6. 5 to 8.4 Hz with 3.5-mm amplitude, 8.4 to 150 Hz, Acceleration of 9.8 m/s^2, 100 min in X, Y, and Z directions (10 sweeps of 10 min each = 100 min total)	
	Shock resistance	Conforms to IEC 60068-2-27. 147 m/s^2, 3 times in X, Y, and Z directions (100 m/s^2 for Relay Output Units)	
Battery	**Life**	5 years at 25°C	
	Model	CJ1W-BAT01	
Applicable standards[*1]		cULus, EC Directives, NK, LR and KC[*2]	

*1 Refer to the OMRON website (http://www.ia.omron.com/) or contact your OMRON representative for the most recent applicable standards for each model.

*2 The KC complies with a CPU Unit with a unit version of 1.01 or later.

A-2 Specifications of Basic I/O Units

A-2-1 Overview of Units

Basic I/O Units

● Basic Input Units

Type of Unit	Name	Input specifications		Model	Page
Basic Input Units	DC Input Units	Terminal block, 12 to 24 VDC	8 inputs	CJ1W-ID201	A-6
		Terminal block, 24 VDC,	16 inputs	CJ1W-ID211	A-7
				CJ1W-ID212	A-8
		Fujitsu connector, 24 VDC	32 inputs	CJ1W-ID231	A-9
		MIL connector, 24 VDC	32 inputs	CJ1W-ID232	A-10
				CJ1W-ID233	A-11
		Fujitsu connector, 24 VDC	64 inputs	CJ1W-ID261	A-12
		MIL connector, 24 VDC	64 inputs	CJ1W-ID262	A-14
	AC Input Units	Terminal block, 200 to 240 VAC	8 inputs	CJ1W-IA201	A-16
		Terminal block, 100 to 120 VAC	16 inputs	CJ1W-IA111	A-17
	Interrupt Input Unit	Terminal block, 24 VDC	16 inputs	CJ1W-INT01	A-18
	Quick-response Input Unit	Terminal block, 24 VDC	16 inputs	CJ1W-IDP01	A-19

● Basic Output Units

Type of Unit	Name		Output specifications		Model	Page
Basic Output Units	Relay Output Units		Terminal block, 250 VAC/24 VDC, 2 A, 8 independent contacts	8 outputs	CJ1W-OC201	A-20
			Terminal block, 250 VAC/24 VDC, 2 A	16 outputs	CJ1W-OC211	A-21
	Triac Output Unit		Terminal block, 250 VAC/24 VDC, 0.6 A	8 outputs	CJ1W-OA201	A-22
	Transistor Output Units	Sinking outputs	Terminal block, 12 to 24 VDC, 2 A	8 outputs	CJ1W-OD201	A-23
			Terminal block, 12 to 24 VDC, 0.5 A	8 outputs	CJ1W-OD203	A-24
			Terminal block, 12 to 24 VDC, 0.5 A	16 outputs	CJ1W-OD211	A-25
			Terminal block, 24 VDC, 0.5 A	16 outputs	CJ1W-OD213	A-26
			Fujitsu connector, 12 to 24 VDC, 0.5 A	32 outputs	CJ1W-OD231	A-27
			MIL connector, 12 to 24 VDC, 0.5 A	32 outputs	CJ1W-OD233	A-28
			MIL connector, 24 VDC, 0.5 A	32 outputs	CJ1W-OD234	A-29
			Fujitsu connector, 12 to 24 VDC, 0.3 A	64 outputs	CJ1W-OD261	A-31
			MIL connector, 12 to 24 VDC, 0.3 A	64 outputs	CJ1W-OD263	A-33
		Sourcing outputs	Terminal block, 24 VDC, 2 A, load short-circuit protection, line disconnection detection	8 outputs	CJ1W-OD202	A-35
			Terminal block, 24 VDC, 0.5 A, load short-circuit protection	8 outputs	CJ1W-OD204	A-37
			Terminal block, 24 VDC, 0.5 A, load short-circuit protection	16 outputs	CJ1W-OD212	A-38
			MIL connector, 24 VDC, 0.5 A, load short-circuit protection	32 outputs	CJ1W-OD232	A-39
			MIL connector, 12 to 24 VDC, 0.3 A	64 outputs	CJ1W-OD262	A-40

● Basic Mixed I/O Units

Type of Unit	Name		I/O specifications		Model	Page
Basic I/O Units	24-VDC Inputs/Transistor Output Units	Sinking output	Fujitsu connector Inputs: 24 VDC Outputs: 12 to 24 VDC, 0.5 A	16 inputs 16 outputs	CJ1W-MD231	A-42
			MIL connector Inputs: 24 VDC Outputs: 12 to 24 VDC, 0.5 A		CJ1W-MD233	A-44
			Fujitsu connector Inputs: 24 VDC Outputs: 12 to 24 VDC, 0.3 A	32 inputs 32 outputs	CJ1W-MD261	A-45
			MIL connector Inputs: 24 VDC Outputs: 12 to 24 VDC, 0.3 A		CJ1W-MD263	A-47
		Sourcing output	MIL connector Input: 24 VDC Outputs: 24 VDC, 0.5 A, load short-circuit protection	16 inputs 16 outputs	CJ1W-MD232	A-49
	TTL I/O Units		Inputs: 5 VDC Outputs: 5 VDC, 35 mA	32 inputs 32 outputs	CJ1W-MD563	A-51

Reading External Connection and Terminal-Device Variable Diagrams

- I/O terminals in the external connection and terminal-device variable diagrams are shown as viewed from the front panel of the Unit.
- Terminal numbers A0 to A9 and B0 to B9 are used in this manual, but they are not printed on all Units.
- A0 to A20 and B0 to B20 are printed on the Units.
- The signal names of the terminals are the device variable names. The device variable names are the names that use “Jxx” as the device name.

A-2-2 Basic I/O Units

Basic Input Units with Terminal Blocks

● CJ1W-ID201 DC Input Unit (12 to 24-VDC, 8 Points)

Name	8-point DC Input Unit with Terminal Block
Model	CJ1W-ID201
Rated Input Voltage	12 to 24 VDC
Allowable Input Voltage Range	10.2 to 26.4 VDC
Input Impedance	2.4 kΩ
Input Current	10 mA typical (at 24 VDC)
ON Voltage/ON Current	8.8 VDC min./3 mA min.
OFF Voltage/OFF Current	3 VDC max./1 mA max.
ON Response Time	8.0 ms max. (Can be set to between 0 and 32 ms in the Unit Information settings.)*1
OFF Response Time	8.0 ms max. (Can be set to between 0 and 32 ms in the Unit Information settings.)*1
Number of Circuits	8 independent circuits
Number of Simultaneously ON Points	100% simultaneously ON
Insulation Resistance	20 MΩ between external terminals and the GR terminal (100 VDC)
Dielectric Strength	1,000 VAC between the external terminals and the GR terminal for 1 minute at a leakage current of 10 mA max.
Internal Current Consumption	80 mA max.
Weight	110 g max.
Circuit Configuration	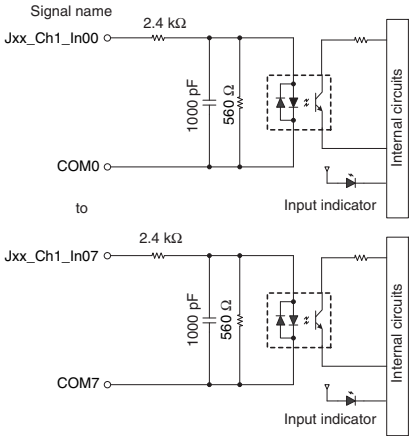
External connection and terminal-device variable diagram	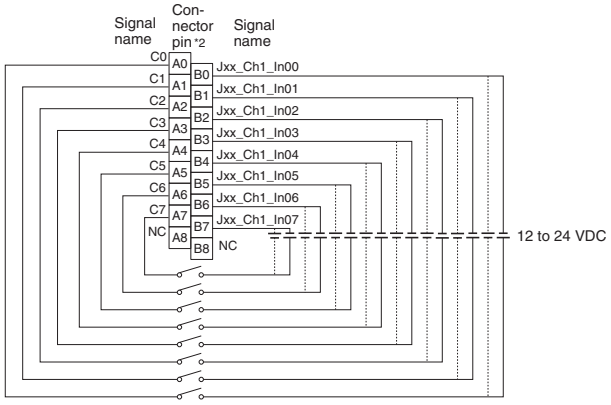 Polarity of the input power supply can be connected in either direction.

*1 The ON response time will be 20 μs maximum and OFF response time will be 400 μs maximum even if the response time are set to 0 ms due to internal element delays.

*2 Terminal numbers A0 to A8 and B0 to B8 are used in the external connection and terminal-device variable diagrams. They are not printed on the Units.

● CJ1W-ID211 DC Input Unit (24 VDC, 16 Points)

Name	16-point DC Input Unit with Terminal Block
Model	CJ1W-ID211
Rated Input Voltage	24 VDC
Allowable Input Voltage Range	20.4 to 26.4 VDC
Input Impedance	3.3 kΩ
Input Current	7 mA typical (at 24 VDC)
ON Voltage/ON Current	14.4 VDC min./3 mA min.
OFF Voltage/OFF Current	5 VDC max./1 mA max.
ON Response Time	8.0 ms max. (Can be set to between 0 and 32 ms in the Unit Information settings.)*1
OFF Response Time	8.0 ms max. (Can be set to between 0 and 32 ms in the Unit Information settings.)*1
Number of Circuits	16 (16 points/common, 1 circuit)
Number of Simultaneously ON Points	100% simultaneously ON (at 24 VDC) (Refer to the following illustration.)
Insulation Resistance	20 MΩ between external terminals and the GR terminal (100 VDC)
Dielectric Strength	1,000 VAC between the external terminals and the GR terminal for 1 minute at a leakage current of 10 mA max.
Internal Current Consumption	80 mA max.
Weight	110 g max.
Circuit Configuration	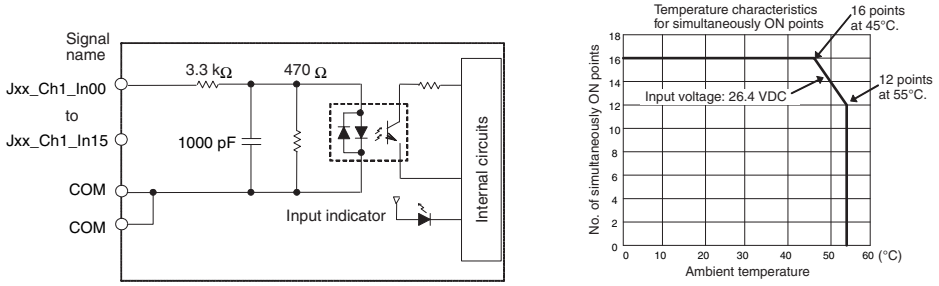
External connection and terminal-device variable diagram	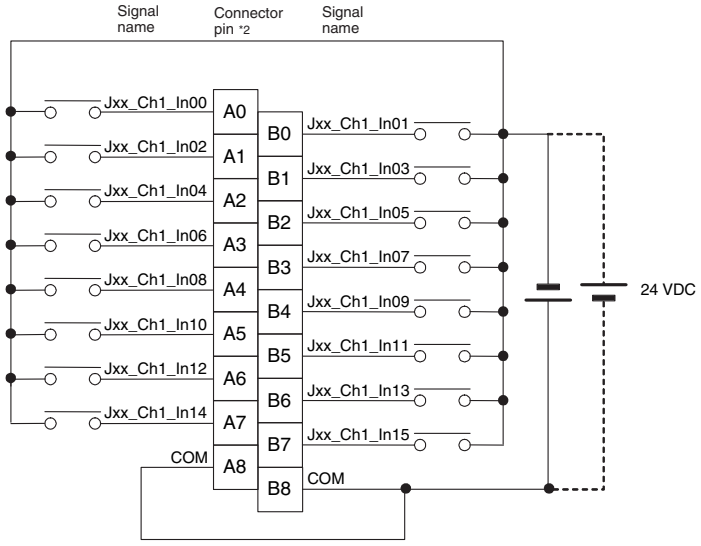 • Polarity of the input power supply can be connected in either direction.

*1 The ON response time will be 20 μs maximum and OFF response time will be 400 μs maximum even if the response time are set to 0 ms due to internal element delays.

*2 Terminal numbers A0 to A8 and B0 to B8 are used in the external connection and terminal-device variable diagrams. They are not printed on the Units.

● CJ1W-ID212 DC Input Unit (24 VDC, 16 Points)

Name	16-point DC Input Unit with Terminal Block
Model	CJ1W-ID212
Rated Input Voltage	24 VDC
Allowable Input Voltage Range	20.4 to 26.4 VDC
Input Impedance	3.3 kΩ
Input Current	7 mA typical (at 24 VDC)
ON Voltage/ON Current	14.4 VDC min./3 mA min.
OFF Voltage/OFF Current	5 VDC max./1 mA max.
ON Response Time	8.0 ms max. (Can be set to between 0 and 32 ms in the Unit Information settings.)*1
OFF Response Time	8.0 ms max. (Can be set to between 0 and 32 ms in the Unit Information settings.)*1
Number of Circuits	16 (16 points/common, 1 circuit)
Number of Simultaneously ON Points	100% simultaneously ON (at 24 VDC) (Refer to the following illustration.)
Insulation Resistance	20 MΩ between external terminals and the GR terminal (100 VDC)
Dielectric Strength	1,000 VAC between the external terminals and the GR terminal for 1 minute at a leakage current of 10 mA max.
Internal Current Consumption	130 mA max.
Weight	110 g max.
Circuit Configuration	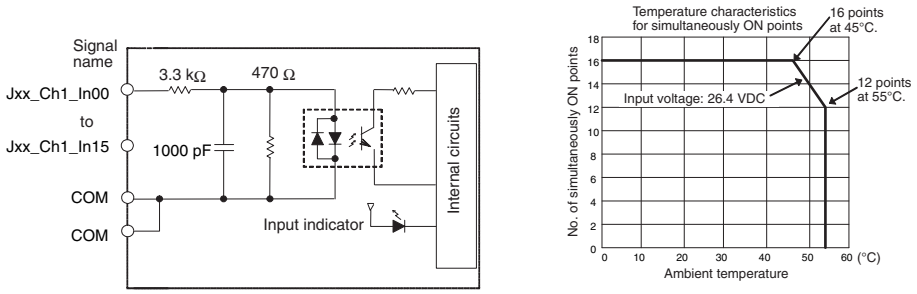
External connection and terminal-device variable diagram	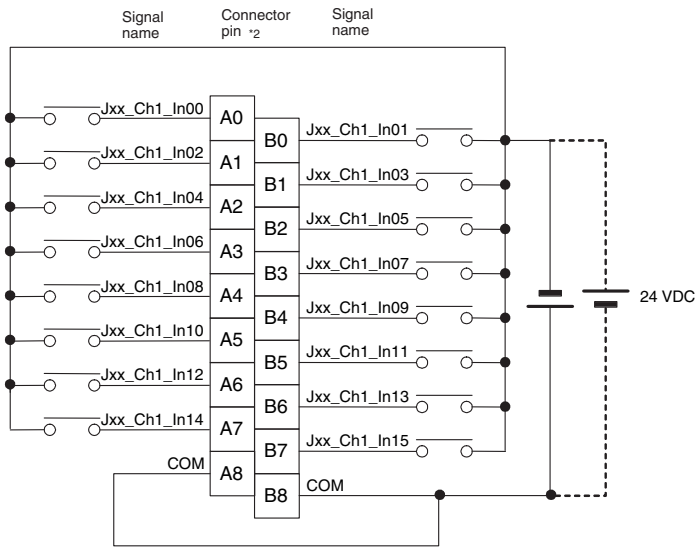 • Polarity of the input power supply can be connected in either direction.

*1 The ON response time will be 15 μs maximum and OFF response time will be 90 μs maximum even if the response time are set to 0 ms due to internal element delays.

*2 Terminal numbers A0 to A8 and B0 to B8 are used in the external connection and terminal-device variable diagrams. They are not printed on the Units.

● CJ1W-ID231 DC Input Unit (24 VDC, 32 Points)

Name	32-point DC Input Unit with Fujitsu Connector
Model	CJ1W-ID231
Rated Input Voltage	24 VDC
Allowable Input Voltage Range	20.4 to 26.4 VDC
Input Impedance	5.6 kΩ
Input Current	4.1 mA typical (at 24 VDC)
ON Voltage/ON Current	19.0 VDC min./3 mA min.
OFF Voltage/OFF Current	5 VDC max./1 mA max.
ON Response Time	8.0 ms max. (Can be set to between 0 and 32 ms in the Unit Information settings.)*
OFF Response Time	8.0 ms max. (Can be set to between 0 and 32 ms in the Unit Information settings.)*
Number of Circuits	32 (16 points/common, 2 circuits)
Number of Simultaneously ON Points	75% (12 points/common) simultaneously ON (at 24 VDC) (Refer to the following illustration.)
Insulation Resistance	20 MΩ between external terminals and the GR terminal (100 VDC)
Dielectric Strength	1,000 VAC between the external terminals and the GR terminal for 1 minute at a leakage current of 10 mA max.
Internal Current Consumption	90 mA max.
Weight	70 g max.
Accessories	None
Circuit Configuration	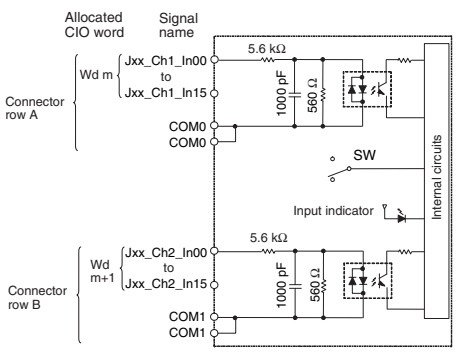 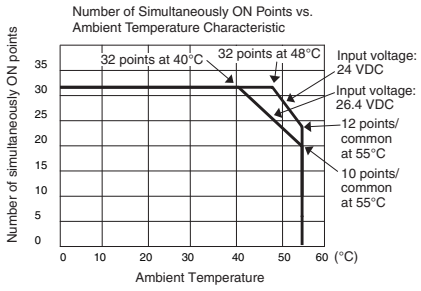
External connection and terminal-device variable diagram	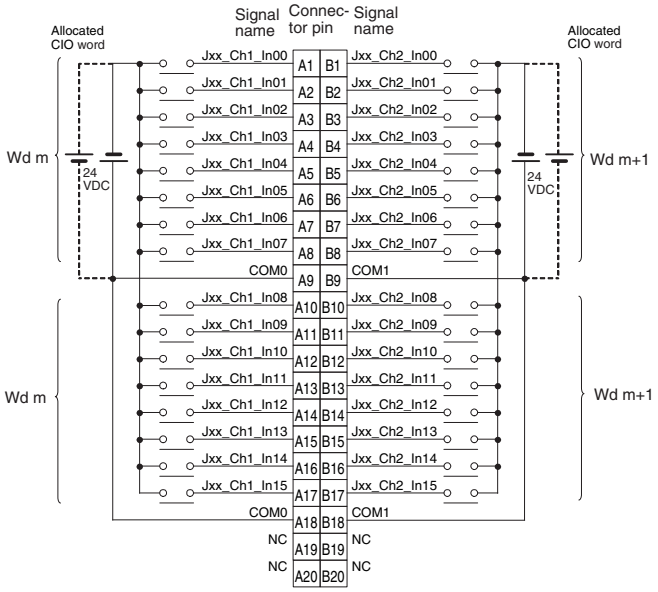 • The input power polarity can be connected in either direction. • Be sure to wire both pins A9 and A18 (COM0), and set the same polarity for both pins. • Be sure to wire both pins B9 and B18 (COM1), and set the same polarity for both pins.

* The ON response time will be 20 μs maximum and OFF response time will be 400 μs maximum even if the response times are set to 0 ms due to internal element delays.

Note Observe the following restrictions when connecting to a 2-wire sensor.

- Make sure the input power supply voltage is larger than the ON voltage (19 V) plus the residual voltage of the sensor (approx. 3 V).
- Use a sensor with a minimum load current of 3 mA min.
- Connect bleeder resistance if you connect a sensor with a minimum load current of 5 mA or higher.

● CJ1W-ID232 DC Input Unit (24 VDC, 32 Points)

Name	32-point DC Input Unit with MIL Connector
Model	CJ1W-ID232
Rated Input Voltage	24 VDC
Allowable Input Voltage Range	20.4 to 26.4 VDC
Input Impedance	5.6 kΩ
Input Current	4.1 mA typical (at 24 VDC)
ON Voltage/ON Current	19.0 VDC min./3 mA min.
OFF Voltage/OFF Current	5 VDC max./1 mA max.
ON Response Time	8.0 ms max. (Can be set to between 0 and 32 ms in the Unit Information settings.)*
OFF Response Time	8.0 ms max. (Can be set to between 0 and 32 ms in the Unit Information settings.)*
Number of Circuits	32 (16 points/common, 2 circuits)
Number of Simultaneously ON Points	75% (12 points/common) simultaneously ON (at 24 VDC) (Refer to the following illustration.)
Insulation Resistance	20 MΩ between external terminals and the GR terminal (100 VDC)
Dielectric Strength	1,000 VAC between the external terminals and the GR terminal for 1 minute at a leakage current of 10 mA max.
Internal Current Consumption	90 mA max.
Weight	70 g max.
Accessories	None
Circuit Configuration	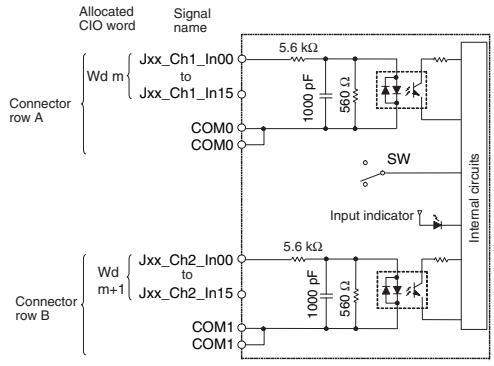 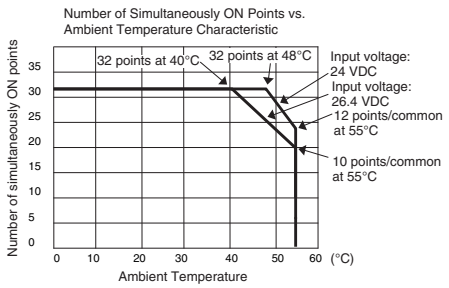

External connection and terminal-device variable diagram	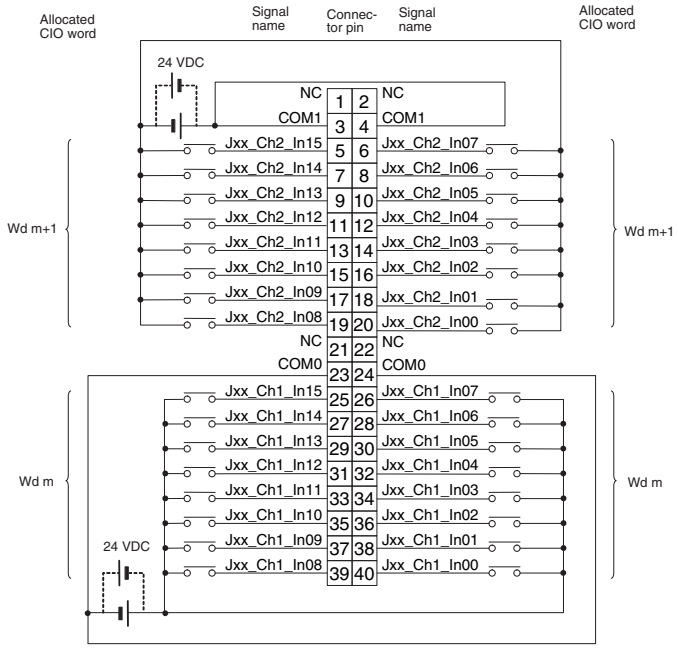 • The input power polarity can be connected in either direction. • Be sure to wire both pins 23 and 24 (COM0), and set the same polarity for both pins. • Be sure to wire both pins 3 and 4 (COM1), and set the same polarity for both pins.

* The ON response time will be 20 μs maximum and OFF response time will be 400 μs maximum even if the response times are set to 0 ms due to internal element delays.

Note Observe the following restrictions when connecting to a 2-wire sensor.

- Make sure the input power supply voltage is larger than the ON voltage (19 V) plus the residual voltage of the sensor (approx. 3 V).
- Use a sensor with a minimum load current of 3 mA min.
- Connect bleeder resistance if you connect a sensor with a minimum load current of 5 mA or higher.

● CJ1W-ID233 DC Input Unit (24 VDC, 32 Points)

Name	32-point DC Input Unit with MIL Connector
Model	CJ1W-ID233
Rated Input Voltage	24 VDC
Allowable Input Voltage Range	20.4 to 26.4 VDC
Input Impedance	5.6 kΩ
Input Current	4.1 mA typical (at 24 VDC)
ON Voltage/ON Current	19.0 VDC min./3 mA min.
OFF Voltage/OFF Current	5 VDC max./1 mA max.
ON Response Time	8.0 ms max. (Can be set to between 0 and 32 ms in the Unit Information settings.)*
OFF Response Time	8.0 ms max. (Can be set to between 0 and 32 ms in the Unit Information settings.)*
Number of Circuits	32 (16 points/common, 2 circuits)
Number of Simultaneously ON Points	75% (12 points/common) simultaneously ON (at 24 VDC) (Refer to the following illustration.)
Insulation Resistance	20 MΩ between external terminals and the GR terminal (100 VDC)
Dielectric Strength	1,000 VAC between the external terminals and the GR terminal for 1 minute at a leakage current of 10 mA max.
Internal Current Consumption	200 mA max.
Weight	70 g max.
Accessories	None

Circuit Configuration	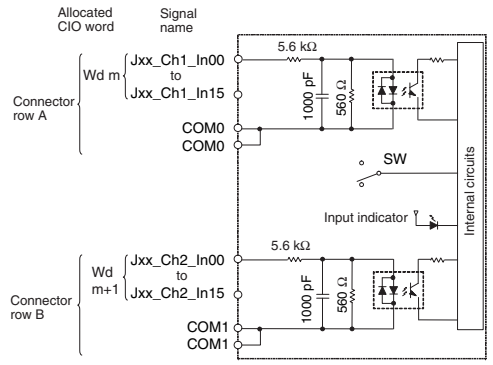 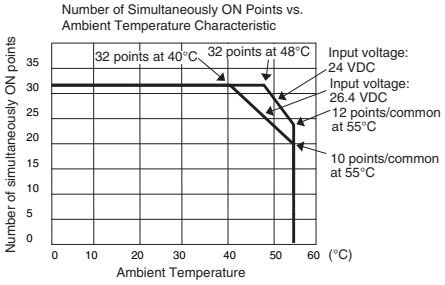
External connection and terminal-device variable diagram	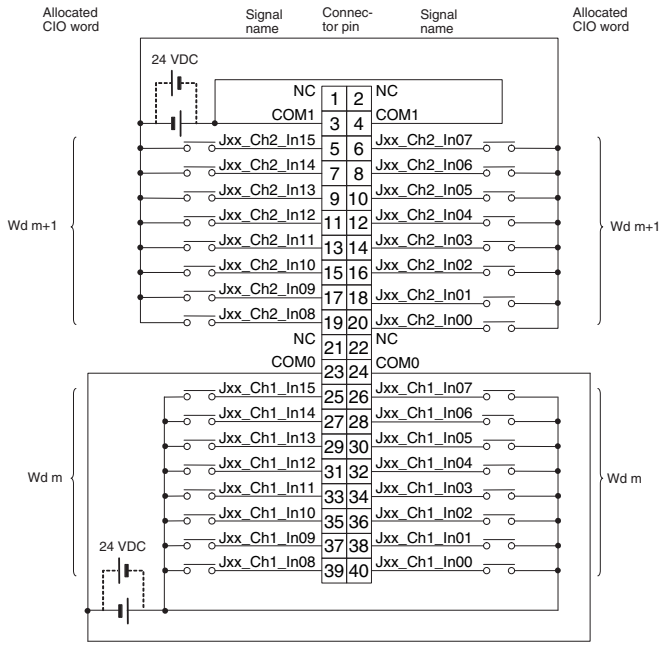 • The input power polarity can be connected in either direction. • Be sure to wire both pins 23 and 24 (COM0), and set the same polarity for both pins. • Be sure to wire both pins 3 and 4 (COM1), and set the same polarity for both pins.

* The ON response time will be 15 μs maximum and OFF response time will be 90 μs maximum even if the response times are set to 0 ms due to internal element delays.

Note Observe the following restrictions when connecting to a 2-wire sensor.

- Make sure the input power supply voltage is larger than the ON voltage (19 V) plus the residual voltage of the sensor (approx. 3 V).
- Use a sensor with a minimum load current of 3 mA min.
- Connect bleeder resistance if you connect a sensor with a minimum load current of 5 mA or higher.

● CJ1W-ID261 DC Input Unit (24 VDC, 64 Points)

Name	64-point DC Input Unit with Fujitsu Connector
Model	CJ1W-ID261
Rated Input Voltage	24 VDC
Allowable Input Voltage Range	20.4 to 26.4 VDC
Input Impedance	5.6 kΩ
Input Current	4.1 mA typical (at 24 VDC)
ON Voltage/ON Current	19.0 VDC min./3 mA min.
OFF Voltage/OFF Current	5 VDC max./1 mA max.

ON Response Time	8.0 ms max. (Can be set to between 0 and 32 ms in the Unit Information settings.)*
OFF Response Time	8.0 ms max. (Can be set to between 0 and 32 ms in the Unit Information settings.)*
Number of Circuits	64 (16 points/common, 4 circuits)
Number of Simultaneously ON Points	50% (16 points/common) simultaneously ON (at 24 VDC) (Refer to the following illustrations.)
Insulation Resistance	20 MΩ between external terminals and the GR terminal (100 VDC)
Dielectric Strength	1,000 VAC between the external terminals and the GR terminal for 1 minute at a leakage current of 10 mA max.
Internal Current Consumption	90 mA max.
Weight	110 g max.
Accessories	None

Circuit Configuration

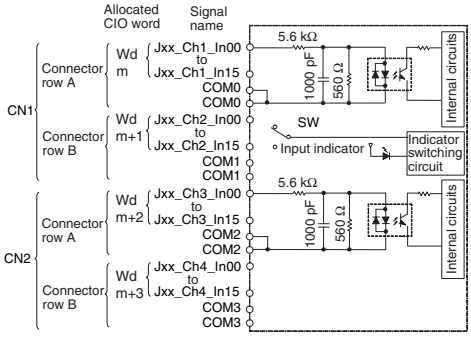

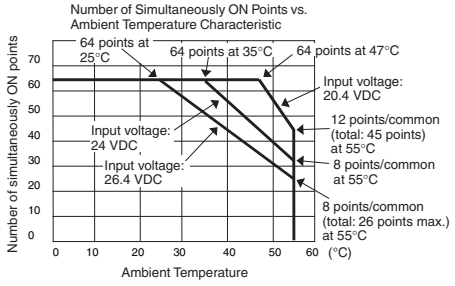

External connection and terminal-device variable diagram

CN1

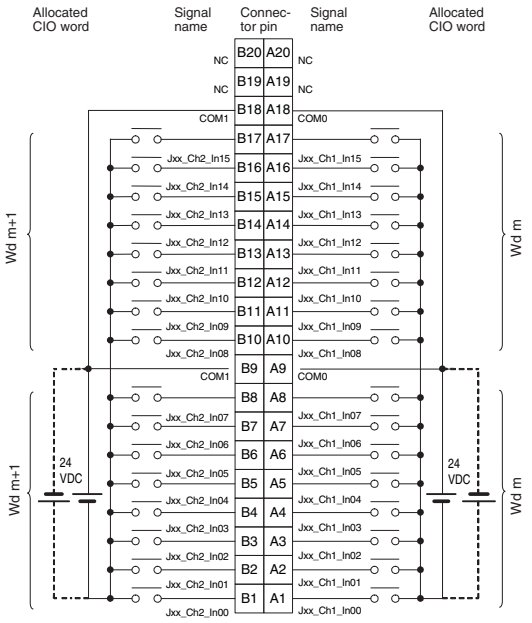

- The input power polarity can be connected in either direction.
- Be sure to wire both pins A9 and A18 (COM0) of CN1, and set the same polarity for both pins.
- Be sure to wire both pins B9 and B18 (COM1) of CN1, and set the same polarity for both pins.

CN2

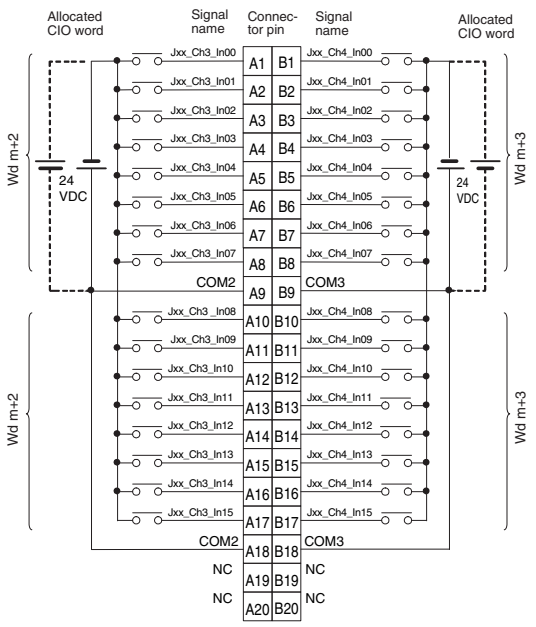

- The input power polarity can be connected in either direction.
- Be sure to wire both pins A9 and A18 (COM2) of CN2, and set the same polarity for both pins.
- Be sure to wire both pins B9 and B18 (COM3) of CN2, and set the same polarity for both pins.

* The ON response time will be 120 μs maximum and OFF response time will be 400 μs maximum even if the response times are set to 0 ms due to internal element delays.

Note Observe the following restrictions when connecting to a 2-wire sensor.

- Make sure the input power supply voltage is larger than the ON voltage (19 V) plus the residual voltage of the sensor (approx. 3 V).
- Use a sensor with a minimum load current of 3 mA min.
- Connect bleeder resistance if you connect a sensor with a minimum load current of 5 mA or higher.

● CJ1W-ID262 DC Input Unit (24 VDC, 64 Points)

Name	64-point DC Input Unit with MIL Connector
Model	CJ1W-ID262
Rated Input Voltage	24 VDC
Allowable Input Voltage Range	20.4 to 26.4 VDC
Input Impedance	5.6 kΩ
Input Current	4.1 mA typical (at 24 VDC)
ON Voltage/ON Current	19.0 VDC min./3 mA min.
OFF Voltage/OFF Current	5 VDC max./1 mA max.
ON Response Time	8.0 ms max. (Can be set to between 0 and 32 ms in the Unit Information settings.)*
OFF Response Time	8.0 ms max. (Can be set to between 0 and 32 ms in the Unit Information settings.)*
Number of Circuits	64 (16 points/common, 4 circuits)
Number of Simultaneously ON Points	50% (8 points/common) simultaneously ON (at 24 VDC) (Refer to the following illustrations.)
Insulation Resistance	20 MΩ between external terminals and the GR terminal (100 VDC)
Dielectric Strength	1,000 VAC between the external terminals and the GR terminal for 1 minute at a leakage current of 10 mA max.
Internal Current Consumption	90 mA max.
Weight	110 g max.
Accessories	None
Circuit Configuration	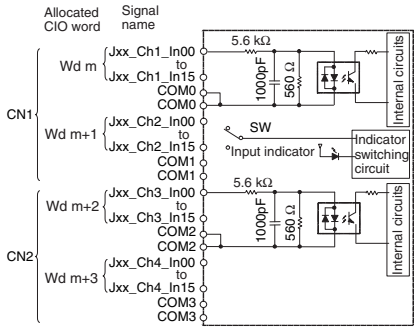 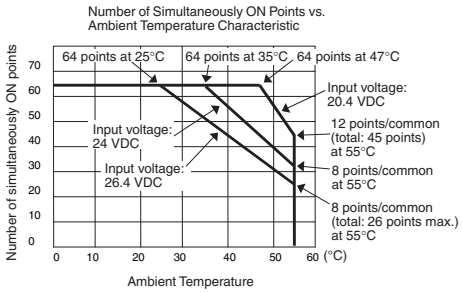

	CN1	CN2
External connection and terminal-device variable diagram	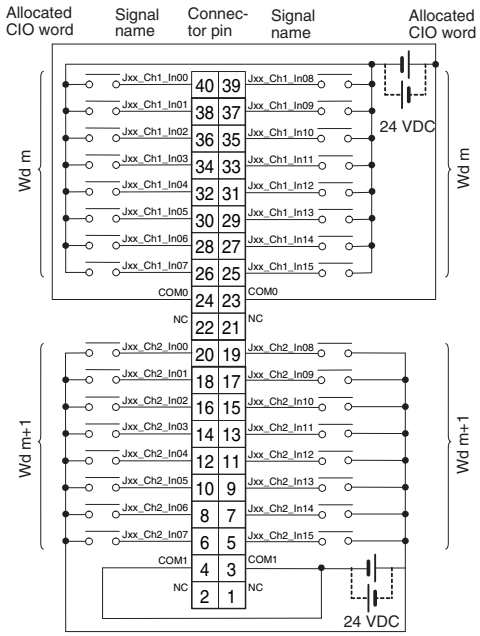 • The input power polarity can be connected in either direction. • Be sure to wire both pins 23 and 24 (COM0) of CN1, and set the same polarity for both pins. • Be sure to wire both pins 3 and 4 (COM1) of CN1, and set the same polarity for both pins.	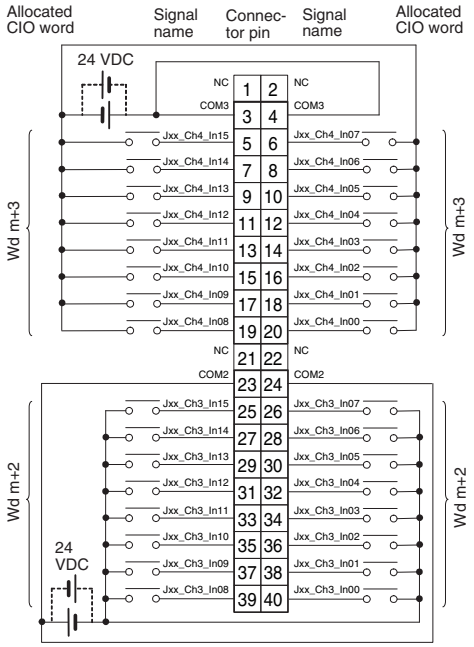 • The input power polarity can be connected in either direction. • Be sure to wire both pins 23 and 24 (COM2) of CN2, and set the same polarity for both pins. • Be sure to wire both pins 3 and 4 (COM3) of CN2, and set the same polarity for both pins.

* The ON response time will be 120 μs maximum and OFF response time will be 400 μs maximum even if the response times are set to 0 ms due to internal element delays.

Note Observe the following restrictions when connecting to a 2-wire sensor.

- Make sure the input power supply voltage is larger than the ON voltage (19 V) plus the residual voltage of the sensor (approx. 3 V).
- Use a sensor with a minimum load current of 3 mA min.
- Connect bleeder resistance if you connect a sensor with a minimum load current of 5 mA or higher.

● CJ1W-IA201 AC Input Unit (200 VAC, 8 Points)

Name	8-point AC Input Unit with Terminal Block
Model	CJ1W-IA201
Rated Input Voltage	200 to 240 VAC 50/60 Hz
Allowable Input Voltage Range	170 to 264 VAC
Input Impedance	21 kΩ (50 Hz), 18 kΩ (60 Hz)
Input Current	9 mA typical (at 200 VAC, 50 Hz), 11 mA typical (at 200 VAC, 60 Hz)
ON Voltage/ON Current	120 VAC min./4 mA min.
OFF Voltage/OFF Current	40 VAC max./2 mA max.
ON Response Time	18.0 ms max. (Default setting in Unit Information: 8 ms)*1
OFF Response Time	48.0 ms max. (Default setting in Unit Information: 8 ms)*1
Number of Circuits	8 (8 points/common, 1 circuit)
Number of Simultaneously ON Points	100% (8 points/common) simultaneously ON
Insulation Resistance	20 MΩ between external terminals and the GR terminal (500 VDC)
Dielectric Strength	2,000 VAC between the external terminals and the GR terminal for 1 minute at a leakage current of 10 mA max.
Internal Current Consumption	80 mA max.
Weight	130 g max.
Accessories	None
Circuit Configuration	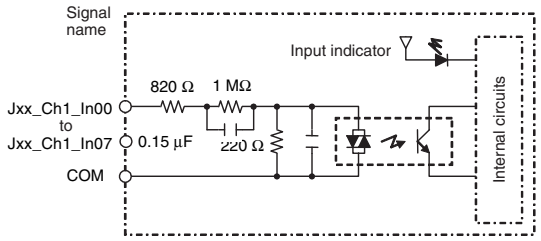
Terminal Connections	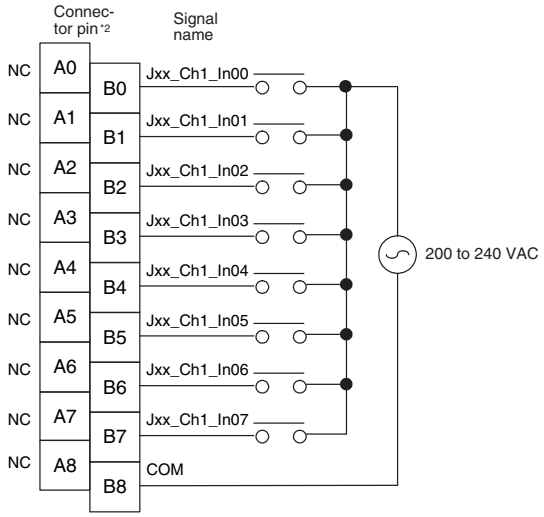

*1 Can be set to 0 ms, 0.5 ms, 1 ms, 2 ms, 4 ms, 8 ms, 16 ms, or 32ms in the Unit Information settings. When the response times have been set to 0 ms, the ON response time will be 10 ms maximum and the OFF response time will be 40 ms maximum due to internal element delays.

*2 Terminal numbers A0 to A8 and B0 to B8 are used in the external connection and terminal-device variable diagrams. They are not printed on the Units.

● CJ1W-IA111 AC Input Unit (100 VAC, 16 points)

Name	16-point AC Input Unit with Terminal Block
Model	CJ1W-IA111
Rated input voltage	100 to 120 VAC 50/60 Hz*2
Allowable Input Voltage Range	85 to 132 VAC
Input Impedance	14.5 kΩ (50 Hz), 12 kΩ (60 Hz)
Input Current	7 mA typical (at 100 VAC, 50 Hz), 8 mA typical (at 100 VAC, 60 Hz)
ON Voltage/ON Current	70 VAC min./4 mA min
OFF Voltage/OFF Current	20 VAC max./2 mA max
ON Response Time	18.0 ms max. (Default setting in Unit Information: 8 ms)*1
OFF Response Time	48.0 ms max. (Default setting in Unit Information: 8 ms)*1
Number of Circuits	16 (16 points/common, 1 circuit)
Number of Inputs ON Simultaneously	100% simultaneously ON (16 points/common)
Insulation Resistance	20 MΩ between external terminals and the GR terminal (500 VDC)
Dielectric Strength	2,000 VAC between the external terminals and the GR terminal for 1 minute at a leakage current of 10 mA max.
Internal Current Consumption	90 mA max.
Weight	130 g max.
Accessories	None
Circuit Layout	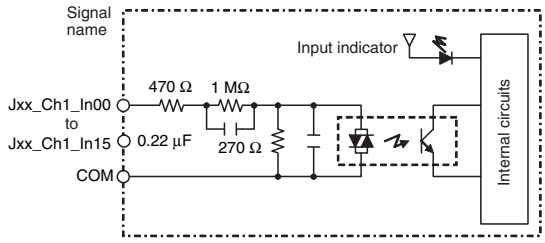
External connection and terminal-device variable diagram	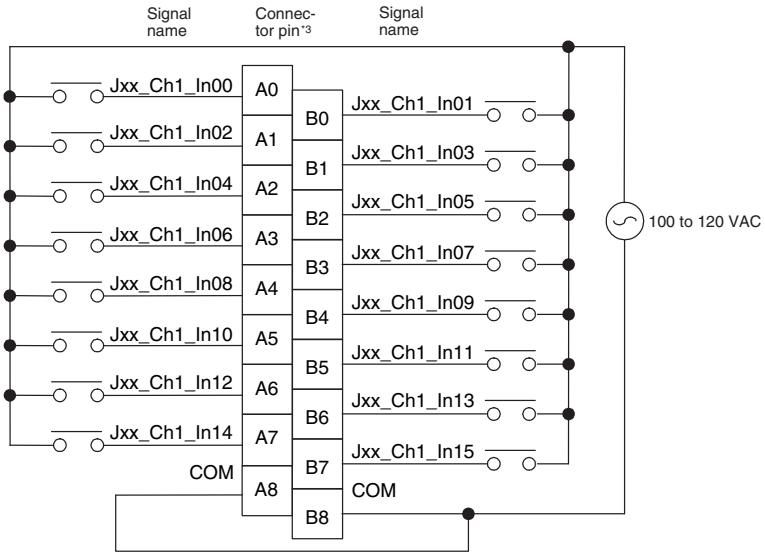

*1 Can be set to 0 ms, 0.5 ms, 1 ms, 2 ms, 4 ms, 8 ms, 16 ms, or 32ms in the Unit Information settings. When the response times have been set to 0 ms, the ON response time will be 10 ms maximum and the OFF response time will be 40 ms maximum due to internal element delays.

*2 Use an input voltage of 90 VAC or higher when connecting 2-wire sensors.

*3 Terminal numbers A0 to A8 and B0 to B8 are used in the external connection and terminal-device variable diagrams. They are not printed on the Units.

● CJ1W-INT01 Interrupt Input Unit (16 Points)

Name	16-point Interrupt Input Unit with Terminal Block
Model	CJ1W-INT01
Rated Input Voltage	24 VDC
Allowable Input Voltage Range	20.4 to 26.4 VDC
Input Impedance	3.3 kΩ
Input Current	7 mA typical (at 24 VDC)
ON Voltage/ON Current	14.4 VDC min./3 mA min.
OFF Voltage/OFF Current	5 VDC max./1 mA max.
ON Response Time	0.05 ms max.
OFF Response Time	0.5 ms max.
Number of Circuits	16 (16 points/common, 1 circuit)
Number of Simultaneously ON Points	100% (16 points/common) simultaneously ON (24 VDC)
Insulation Resistance	20 MΩ between external terminals and GR terminal (at 100 VDC)
Dielectric Strength	1,000 VAC between external terminals and GR terminal for 1 minute at a leakage current of 10 mA max.
Internal Current Consumption	80 mA max.
Weight	110 g max.
Accessories	None
Circuit Configuration	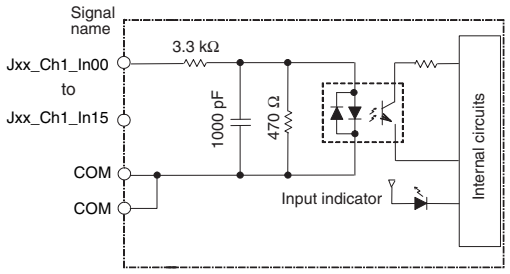 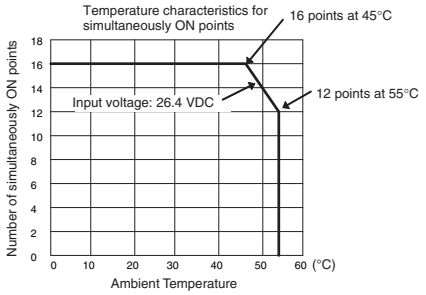 • Up to two Interrupt Input Units can be mounted to the CPU Rack. They must be connected as one of the five Units immediately next to the CPU Unit. If an Interrupt Input Unit is connected in any other position, an Incorrect Unit/Expansion Rack Connection error will occur. • Set the pulse width of signals input to the Interrupt Input Unit so they satisfy the following conditions. 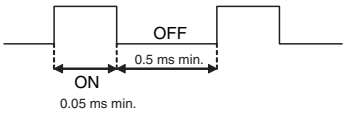
External connection and terminal-device variable diagram	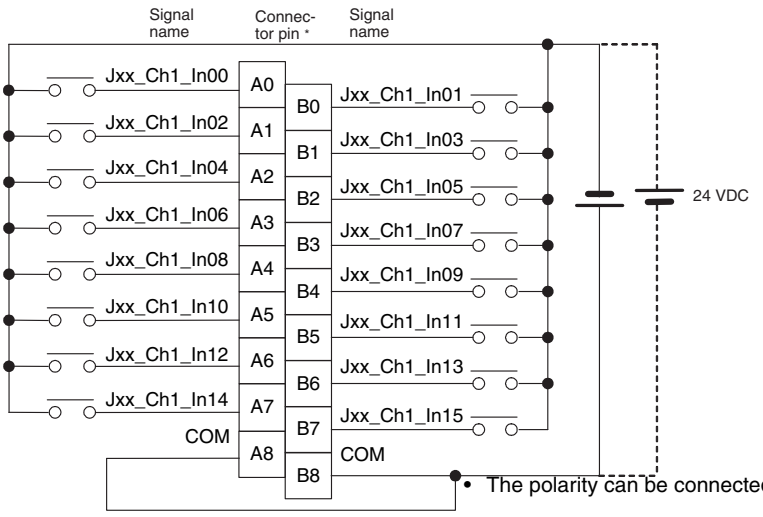 • The polarity can be connected in either direction.

* Terminal numbers A0 to A8 and B0 to B8 are used in the external connection and terminal-device variable diagrams. They are not printed on the Units.

Note Interrupt Input Units can be used as normal Basic I/O Units. They cannot be used to start I/O interrupt tasks.

● CJ1W-IDP01 Quick-response Input Unit (16 Points)

Name	16-point Quick-response Input Unit with Terminal Block
Model	CJ1W-IDP01
Rated Input Voltage	24 VDC
Allowable Input Voltage Range	20.4 to 26.4 VDC
Input Impedance	3.3 kΩ
Input Current	7 mA typical (at 24 VDC)
ON Voltage/ON Current	14.4 VDC min./3 mA min.
OFF Voltage/OFF Current	5 VDC max./1 mA max.
ON Response Time	0.05 ms max.
OFF Response Time	0.5 ms max.
Number of Circuits	16 (16 points/common, 1 circuit)
Number of Simultaneously ON Points	100% (16 points/common) simultaneously ON (24 VDC)
Insulation Resistance	20 MΩ between external terminals and GR terminal (at 100 VDC)
Dielectric Strength	1,000 VAC between external terminals and GR terminal for 1 minute at a leakage current of 10 mA max.
Internal Current Consumption	80 mA max.
Weight	110 g max.
Accessories	None
Circuit Configuration	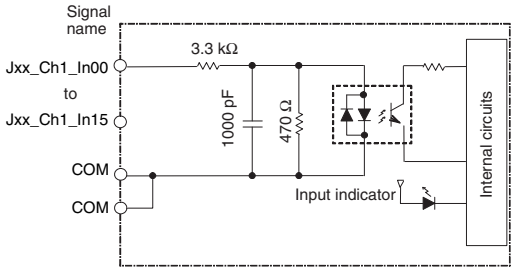 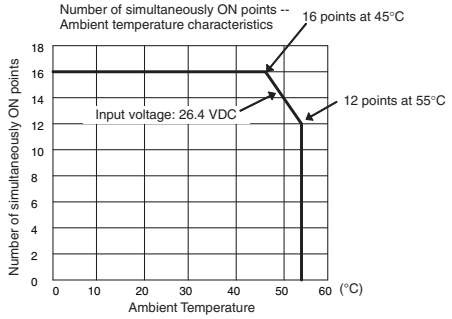
External connection and terminal-device variable diagram	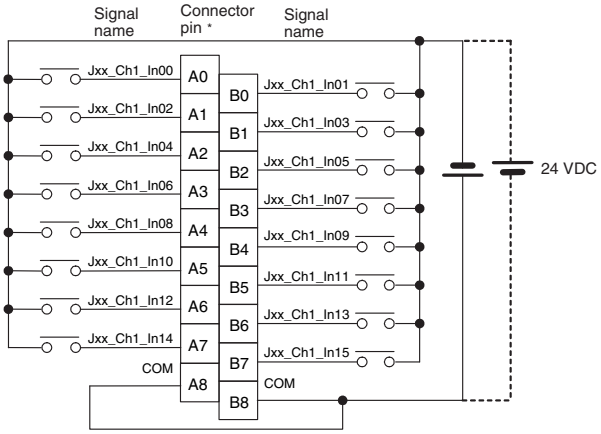 • The input power supply polarity can be connected in either direction.

- With quick-response inputs, pulse inputs shorter than the CPU Unit's cycle time can be read by the CPU Unit.
- The pulse width (ON time) that can be read by the Quick-response Input Unit is 0.05 ms.
- Inputs read by the internal circuits are cleared when inputs are refreshed.

* Terminal numbers A0 to A8 and B0 to B8 are used in the external connection and terminal-device variable diagrams. They are not printed on the Units.

Basic Output Units

● CJ1W-OC201 Contact Output Unit (Independent Relays, 8 Points)

Name	8-point Contact Output Unit with Terminal Block (Independent Relays)
Model	CJ1W-OC201
Max. Switching Capacity	2 A 250 VAC (cosϕ = 1), 2 A 250 VAC (cosϕ = 0.4), 2 A 24 VDC (16 A/Unit)
Min. Switching Capacity	1 mA 5 VDC
Relays	NY-24W-K-IE (Fujitsu Takamizawa Components, Ltd.), Cannot be replaced.
Service Life of Relay	Electrical: 150,000 operations (24 VDC, resistive load)/100,000 operations (240 VAC, cosϕ = 0.4, inductive load) Mechanical: 20,000,000 operations Service life will vary depending on the connected load. Refer to page A-53 for information on service life according to the load.
ON Response Time	15 ms max.
OFF Response Time	15 ms max.
Number of Circuits	8 independent contacts
Insulation Resistance	20 MΩ between external terminals and the GR terminal (500 VDC)
Dielectric Strength	2,000 VAC between the external terminals and the GR terminal for 1 minute at a leakage current of 10 mA max.
Internal Current Consumption	90 mA 5 VDC max. 48 mA 24 VDC max. (6 mA × No. of ON points)
Weight	140 g max.
Circuit Configuration	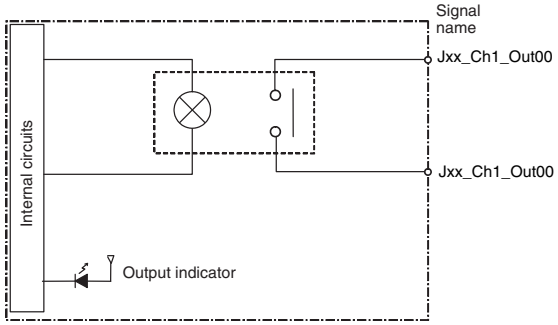
External connection and terminal-device variable diagram	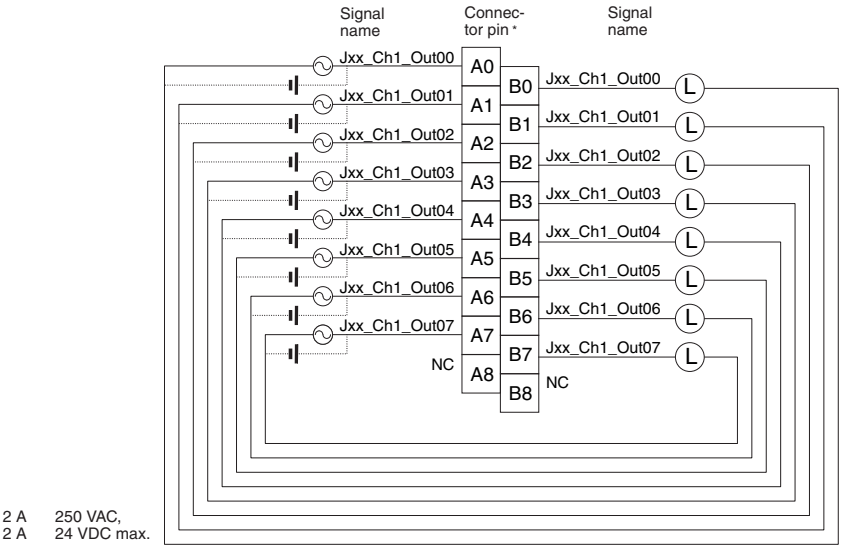 •The input power supply polarity can be connected in either direction.

* Terminal numbers A0 to A8 and B0 to B8 are used in the external connection and terminal-device variable diagrams. They are not printed on the Units.

● CJ1W-OC211 Contact Output Unit (16 Points)

Name	16-point Contact Output Unit with Terminal Block
Model	CJ1W-OC211
Max. Switching Capacity	2 A 250 VAC (cosϕ = 1), 2 A 250 VAC (cosϕ = 0.4), 2 A 24 VDC (8 A/Unit)
Min. Switching Capacity	1 mA 5 VDC
Relays	NY-24W-K-IE (Fujitsu Takamizawa Components, Ltd.), Cannot be replaced.
Service Life of Relay	Electrical: 150,000 operations (24 VDC, resistive load)/ 100,000 operations (240 VAC, cosϕ = 0.4, inductive load) Mechanical: 20,000,000 operations Service life will vary depending on the connected load. Refer to page A-53 for information on service life according to the load.
ON Response Time	15 ms max.
OFF Response Time	15 ms max.
Number of Circuits	16 points/common, 1 circuit
Insulation Resistance	20 MΩ between external terminals and the GR terminal (500 VDC)
Dielectric Strength	2,000 VAC between the external terminals and the GR terminal for 1 minute at a leakage current of 10 mA max.
Internal Current Consumption	110 mA 5 VDC max. 96 mA 24 VDC max. (6 mA × No. of ON points)
Weight	170 g max.
Circuit Configuration	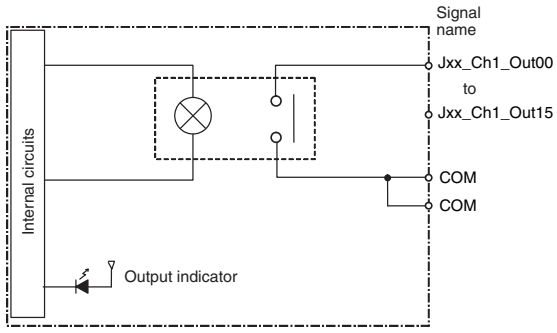
External connection and terminal-device variable diagram	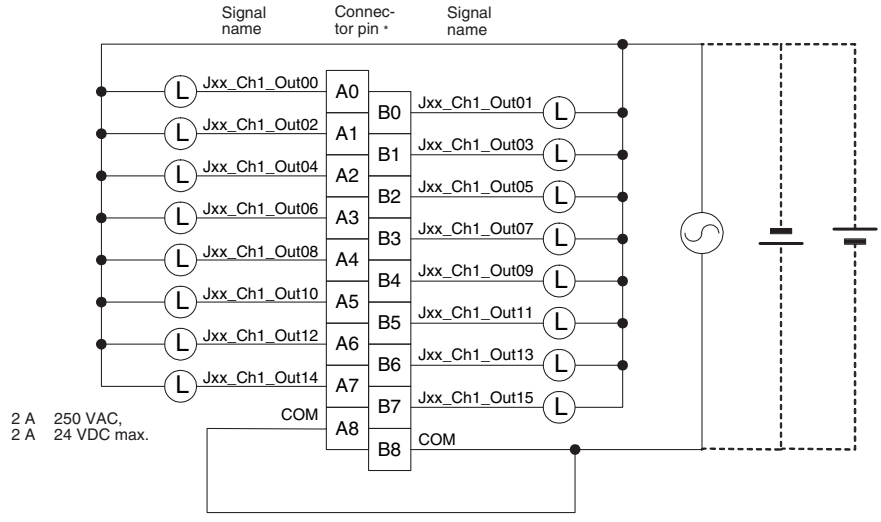

* Terminal numbers A0 to A8 and B0 to B8 are used in the external connection and terminal-device variable diagrams. They are not printed on the Units.

● CJ1W-OA201 Triac Output Unit (8 Points)

Name	8-point Triac Output Unit with Terminal Block
Model	CJ1W-OA201
Max. Switching Capacity	0.6 A 250 VAC, 50/60 Hz (2.4 A/Unit)
Max. Inrush Current	15 A (pulse width: 10 ms max.)
Min. Switching Capacity	50 mA 75 VAC
Leakage Current	1.5 mA (200 VAC) max.
Residual Voltage	1.6 VAC max.
ON Response Time	1 ms max.
OFF Response Time	1/2 of load frequency + 1 ms or less.
Number of Circuits	8 (8 points/common, 1 circuit)
Surge Protector	C.R Absorber + Surge Absorber
Fuses	5 A (1/common, 1 used) The fuse cannot be replaced by the user.
Insulation Resistance	20 MΩ between the external terminals and the GR terminal (500 VDC)
Dielectric Strength	2,000 VAC between the external terminals and the GR terminal for 1 minute at a leakage current of 10 mA max.
Internal Current Consumption	220 mA max.
Weight	150 g max.
Circuit Configuration	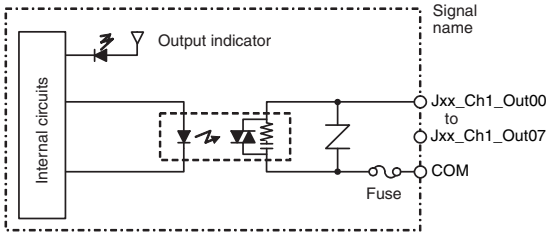
External connection and terminal-device variable diagram	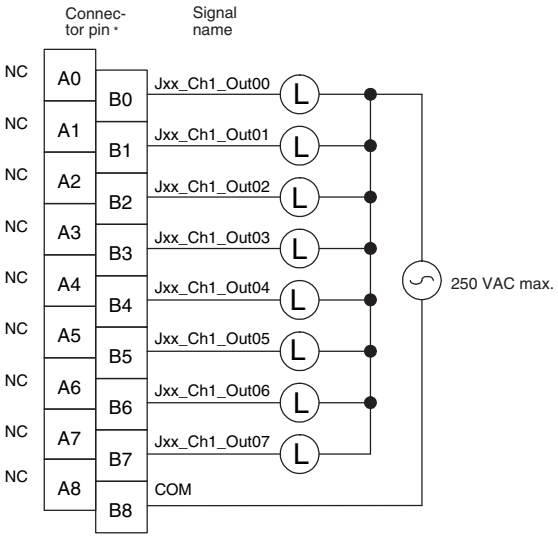

* Terminal numbers A0 to A8 and B0 to B8 are used in the external connection and terminal-device variable diagrams. They are not printed on the Units.

● CJ1W-OD201 Transistor Output Unit (8 Points)

Name	8-point Transistor Output Unit with Terminal Block (Sinking Outputs)
Model	CJ1W-OD201
Rated Voltage	12 to 24 VDC
Operating Load Voltage Range	10.2 to 26.4 VDC
Maximum Load Current	2.0 A/point, 8.0 A/Unit
Maximum Inrush Current	10 A/point, 10 ms max.
Leakage Current	0.1 mA max.
Residual Voltage	1.5 V max.
ON Response Time	0.5 ms max.
OFF Response Time	1.0 ms max.
Insulation Resistance	20 MΩ between the external terminals and the GR terminal (100 VDC)
Dielectric Strength	1,000 VAC between the external terminals and the GR terminal for 1 minute at a leakage current of 10 mA max.
Number of Circuits	8 (4 points/common, 2 circuits)
Internal Current Consumption	90 mA max.
Fuse	6.3 A (1/common, 2 used) The fuse cannot be replaced by the user.
External Power Supply	12 to 24 VDC, 10 mA min.
Weight	110 g max.
Circuit Configuration	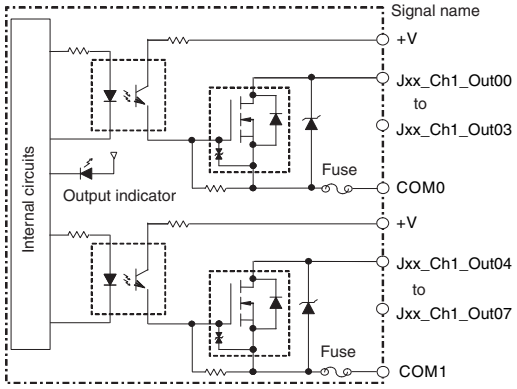
External connection and terminal-device variable diagram	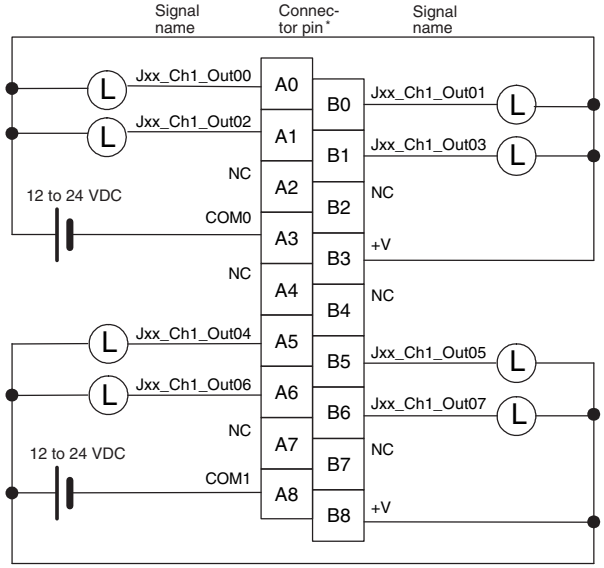 • When wiring, pay careful attention to the polarity of the external power supply. The load may operate incorrectly if the polarity is reversed.

* Terminal numbers A0 to A8 and B0 to B8 are used in the external connection and terminal-device variable diagrams. They are not printed on the Units.

● CJ1W-OD203 Transistor Output Unit (8 Points)

Name	8-point Transistor Output Unit with Terminal Block (Sinking Outputs)
Model	CJ1W-OD203
Rated Voltage	12 to 24 VDC
Operating Load Voltage Range	10.2 to 26.4 VDC
Maximum Load Current	0.5 A/point, 4.0 A/Unit
Maximum Inrush Current	4.0 A/point, 10 ms max.
Leakage Current	0.1 mA max.
Residual Voltage	1.5 V max.
ON Response Time	0.1 ms max.
OFF Response Time	0.8 ms max.
Insulation Resistance	20 MΩ between the external terminals and the GR terminal (100 VDC)
Dielectric Strength	1,000 VAC between the external terminals and the GR terminal for 1 minute at a leakage current of 10 mA max.
Number of Circuits	8 (8 points/common, 1 circuit)
Internal Current Consumption	100 mA max.
Fuse	None
External Power Supply	10.2 to 26.4 VDC, 20 mA min.
Weight	110 g max.
Circuit Configuration	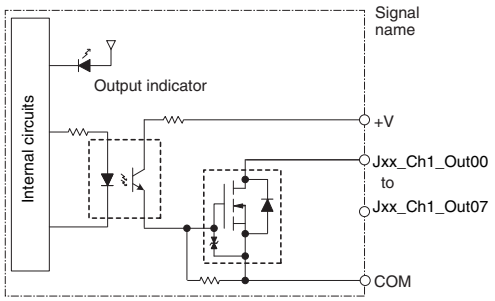
External connection and terminal-device variable diagram	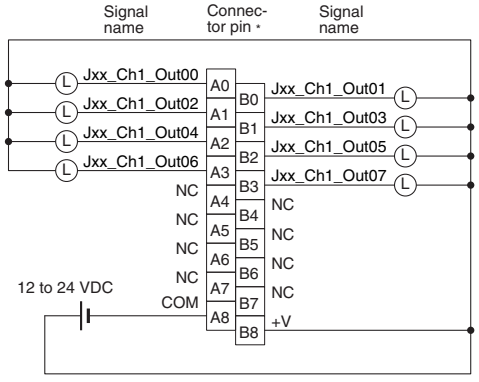 • When wiring, pay careful attention to the polarity of the external power supply. The load may operate incorrectly if the polarity is reversed.

* Terminal numbers A0 to A8 and B0 to B8 are used in the external connection and terminal-device variable diagrams. They are not printed on the Units.

● CJ1W-OD211 Transistor Output Unit (16 Points)

Name	16-point Transistor Output Unit with Terminal Block (Sinking Outputs)
Model	CJ1W-OD211
Rated Voltage	12 to 24 VDC
Operating Load Voltage Range	10.2 to 26.4 VDC
Maximum Load Current	0.5 A/point, 5.0 A/Unit
Maximum Inrush Current	4.0 A/point, 10 ms max.
Leakage Current	0.1 mA max.
Residual Voltage	1.5 V max.
ON Response Time	0.1 ms max.
OFF Response Time	0.8 ms max.
Insulation Resistance	20 MΩ between the external terminals and the GR terminal (100 VDC)
Dielectric Strength	1,000 VAC between the external terminals and the GR terminal for 1 minute at a leakage current of 10 mA max.
Number of Circuits	16 (16 points/common, 1 circuit)
Internal Current Consumption	5 VDC 100 mA max.
Fuse	None
External Power Supply	10.2 to 26.4 VDC, 20 mA min.
Weight	110 g max.
Circuit Configuration	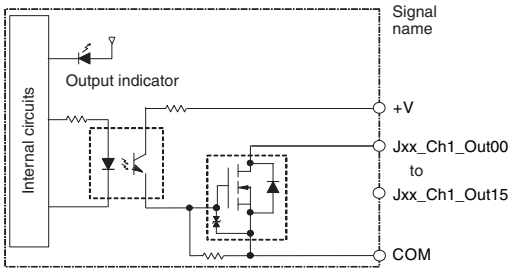
External connection and terminal-device variable diagram	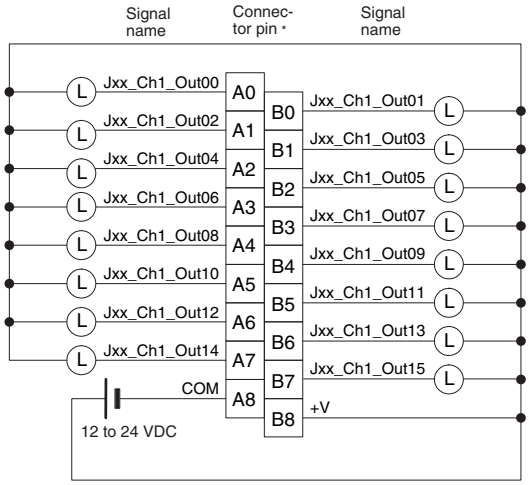 • When wiring, pay careful attention to the polarity of the external power supply. The load may operate incorrectly if the polarity is reversed.

* Terminal numbers A0 to A8 and B0 to B8 are used in the external connection and terminal-device variable diagrams. They are not printed on the Units.

● CJ1W-OD213 Transistor Output Unit (16 Points)

Name	16-point Transistor Output Unit with Terminal Block (Sinking Outputs)
Model	CJ1W-OD213
Rated Voltage	24 VDC
Operating Load Voltage Range	20.4 to 26.4 VDC
Maximum Load Current	0.5 A/point, 5.0 A/Unit
Maximum Inrush Current	4.0 A/point, 10 ms max.
Leakage Current	0.1 mA max.
Residual Voltage	1.5 V max.
ON Response Time	15 μs max.
OFF Response Time	80 μs max.
Insulation Resistance	20 MΩ between the external terminals and the GR terminal (100 VDC)
Dielectric Strength	1,000 VAC between the external terminals and the GR terminal for 1 minute at a leakage current of 10 mA max.
Number of Circuits	16 (16 points/common, 1 circuit)
Internal Current Consumption	5 VDC 150 mA max.
Fuse	None
External Power Supply	20.4 to 26.4 VDC, 55 mA min.
Weight	110 g max.
Circuit Configuration	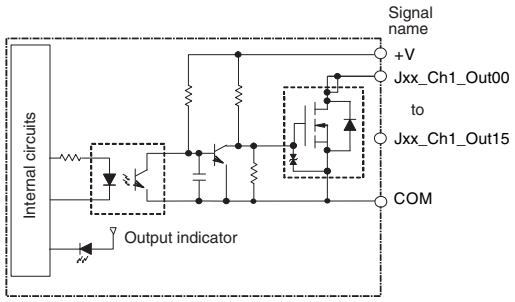
External connection and terminal-device variable diagram	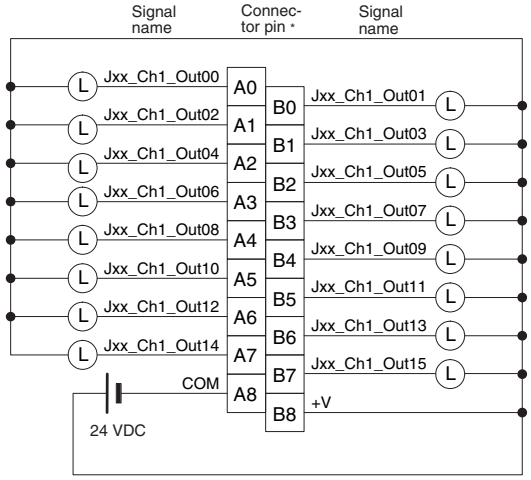 • When wiring, pay careful attention to the polarity of the external power supply. The load may operate incorrectly if the polarity is reversed.

* Terminal numbers A0 to A8 and B0 to B8 are used in the external connection and terminal-device variable diagrams. They are not printed on the Units.

● CJ1W-OD231 Transistor Output Unit (32 Points)

Name	32-point Transistor Output Unit with Fujitsu Connector (Sinking Outputs)
Model	CJ1W-OD231
Rated Voltage	12 to 24 VDC
Operating Load Voltage Range	10.2 to 26.4 VDC
Maximum Load Current	0.5 A/point, 2.0 A/common, 4.0 A/Unit
Maximum Inrush Current	4.0 A/point, 10 ms max.
Leakage Current	0.1 mA max.
Residual Voltage	1.5 V max.
ON Response Time	0.1 ms max.
OFF Response Time	0.8 ms max.
Insulation Resistance	20 MΩ between the external terminals and the GR terminal (100 VDC)
Dielectric Strength	1,000 VAC between the external terminals and the GR terminal for 1 minute at a leakage current of 10 mA max.
Number of Circuits	32 (16 points/common, 2 circuits)
Internal Current Consumption	5 VDC 140 mA max.
Fuse	None
External Power Supply	10.2 to 26.4 VDC, 30 mA min.
Weight	70 g max.
Accessories	None
Circuit Configuration	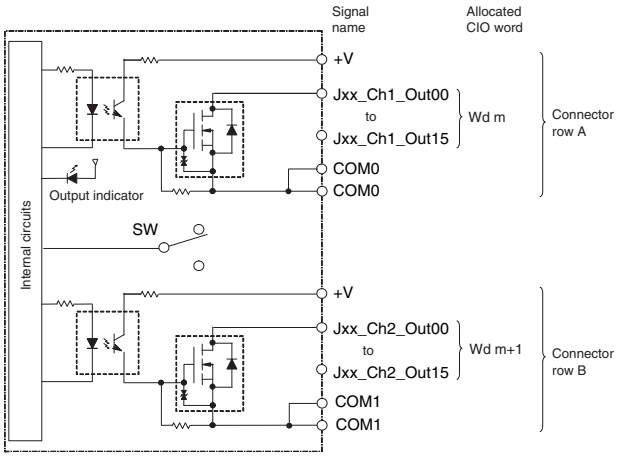

External connection and terminal-device variable diagram	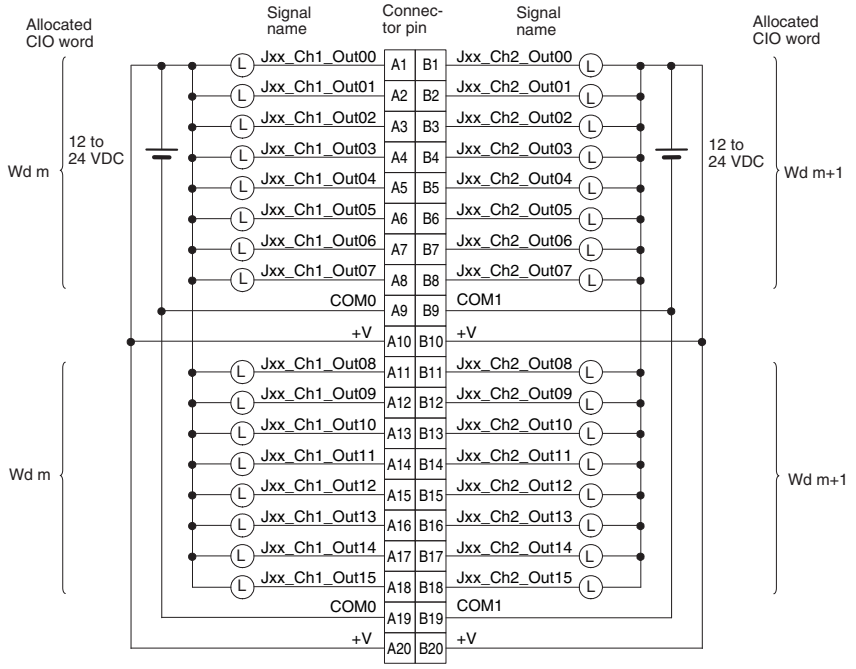 • When wiring, pay careful attention to the polarity of the external power supply. The load may operate incorrectly if the polarity is reversed. • Be sure to wire both terminals A9 and A19 (COM0). • Be sure to wire both terminals B9 and B19 (COM1). • Be sure to wire both terminals A10 and A20 (+V). • Be sure to wire both terminals B10 and B20 (+V).

● CJ1W-OD233 Transistor Output Unit (32 Points)

Name	32-point Transistor Output Unit with MIL Connector (Sinking Outputs)
Model	CJ1W-OD233
Rated Voltage	12 to 24 VDC
Operating Load Voltage Range	10.2 to 26.4 VDC
Maximum Load Current	0.5 A/point, 2 A/common, 4 A/Unit
Maximum Inrush Current	4.0 A/point, 10 ms max.
Leakage Current	0.1 mA max.
Residual Voltage	1.5 V max.
ON Response Time	0.1 ms max.
OFF Response Time	0.8 ms max.
Insulation Resistance	20 MΩ between the external terminals and the GR terminal (100 VDC)
Dielectric Strength	1,000 VAC between the external terminals and the GR terminal for 1 minute at a leakage current of 10 mA max.
Number of Circuits	32 (16 points/common, 2 circuits)
Internal Current Consumption	140 mA max.
Fuse	None
External Power Supply	12 to 24 VDC, 30 mA min.
Weight	70 g max.

Circuit Configuration	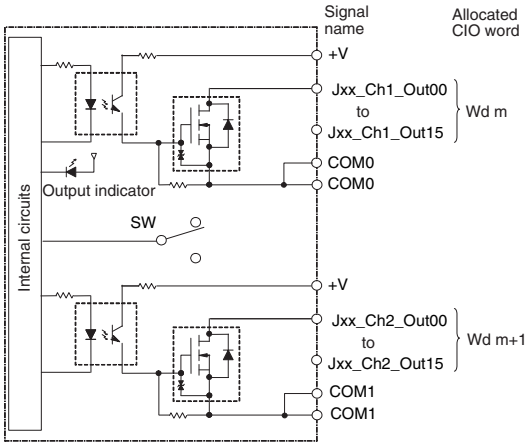
External connection and terminal-device variable diagram	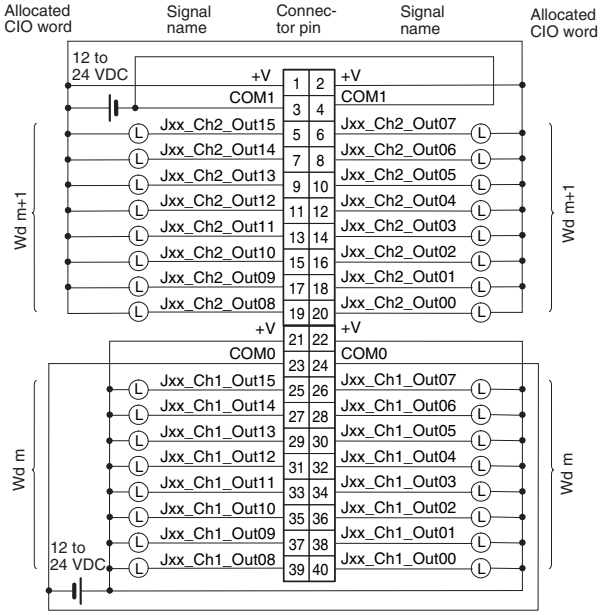 • When wiring, pay careful attention to the polarity of the external power supply. The load may operate incorrectly if the polarity is reversed. • Be sure to wire both terminals 23 and 24 (COM0). • Be sure to wire both terminals 3 and 4 (COM1). • Be sure to wire both terminals 21 and 22 (+V). • Be sure to wire both terminals 1 and 2 (+V).

● CJ1W-OD234 Transistor Output Unit (32 Points)

Name	32-point Transistor Output Unit with MIL Connector (Sinking Outputs)
Model	CJ1W-OD234
Rated Voltage	24 VDC
Operating Load Voltage Range	20.4 to 26.4 VDC
Maximum Load Current	0.5 A/point, 2 A/common, 4 A/Unit
Maximum Inrush Current	4.0 A/point, 10 ms max.
Leakage Current	0.1 mA max.
Residual Voltage	1.5 V max.
ON Response Time	15 μs max.
OFF Response Time	80 μs max.
Insulation Resistance	20 MΩ between the external terminals and the GR terminal (100 VDC)
Dielectric Strength	1,000 VAC between the external terminals and the GR terminal for 1 minute at a leakage current of 10 mA max.
Number of Circuits	32 (16 points/common, 2 circuits)

Internal Current Consumption	220 mA max.
Fuse	None
External Power Supply	20.4 to 26.4 VDC, 110 mA min.
Weight	70 g max.
Circuit Configuration	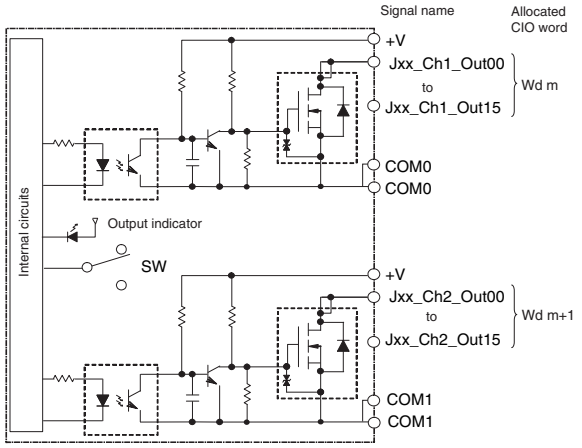
External connection and terminal-device variable diagram	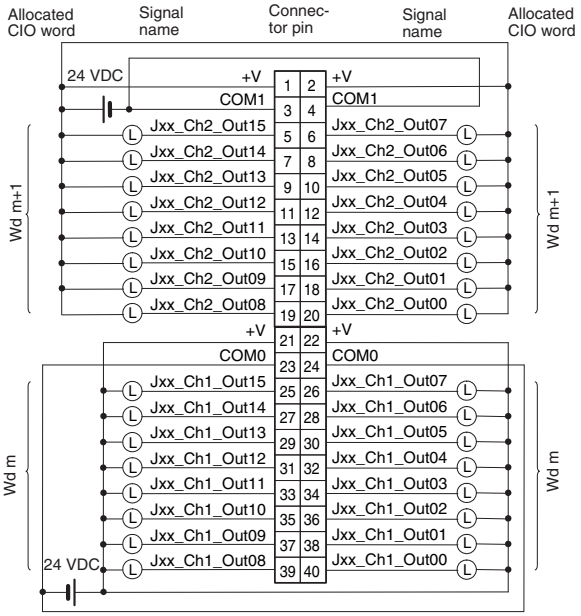 • When wiring, pay careful attention to the polarity of the external power supply. The load may operate incorrectly if the polarity is reversed. • Be sure to wire both terminals 23 and 24 (COM0). • Be sure to wire both terminals 3 and 4 (COM1). • Be sure to wire both terminals 21 and 22 (+V). • Be sure to wire both terminals 1 and 2 (+V).

● CJ1W-OD261 Transistor Output Unit (64 Points)

Name	64-point Transistor Output Unit with Fujitsu Connectors (Sinking Outputs)
Model	CJ1W-OD261
Rated Voltage	12 to 24 VDC
Operating Load Voltage Range	10.2 to 26.4 VDC
Maximum Load Current	0.3 A/point, 1.6 A/common, 6.4 A/Unit
Maximum Inrush Current	3.0 A/point, 10 ms max.
Leakage Current	0.1 mA max.
Residual Voltage	1.5 V max.
ON Response Time	0.5 ms max.
OFF Response Time	1.0 ms max.
Insulation Resistance	20 MΩ between the external terminals and the GR terminal (100 VDC)
Dielectric Strength	1,000 VAC between the external terminals and the GR terminal for 1 minute at a leakage current of 10 mA max.
Number of Circuits	64 (16 points/common, 4 circuits)
Internal Current Consumption	5 VDC, 170 mA max.
Fuse	None
External Power Supply	10.2 to 26.4 VDC, 50 mA min.
Weight	110 g max.
Accessories	None
Circuit Configuration	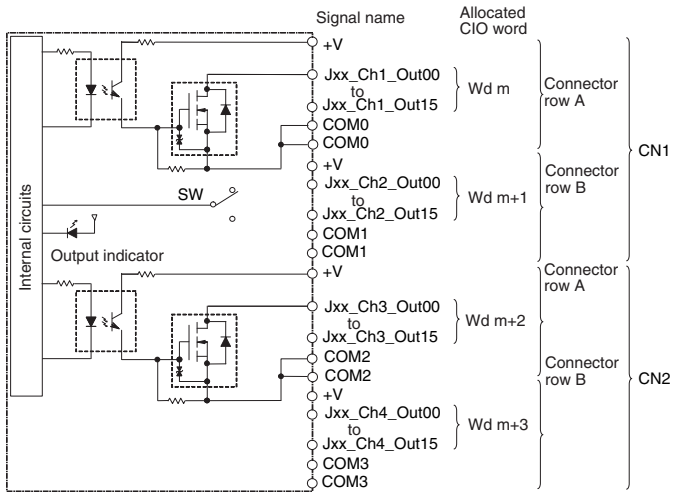

	CN1	CN2
External connection and terminal-device variable diagram	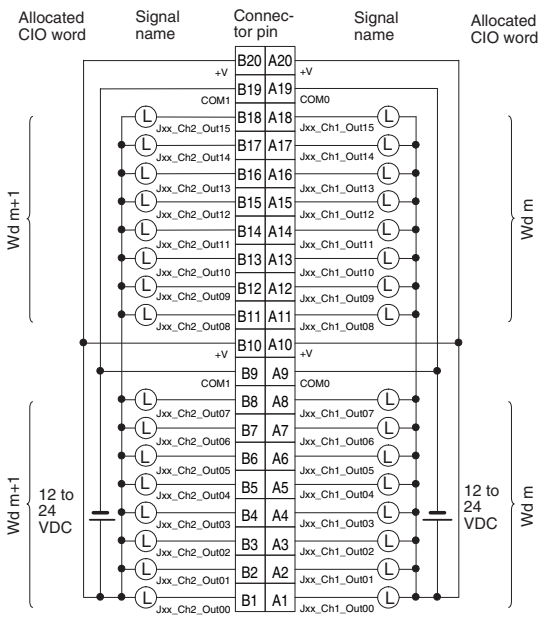	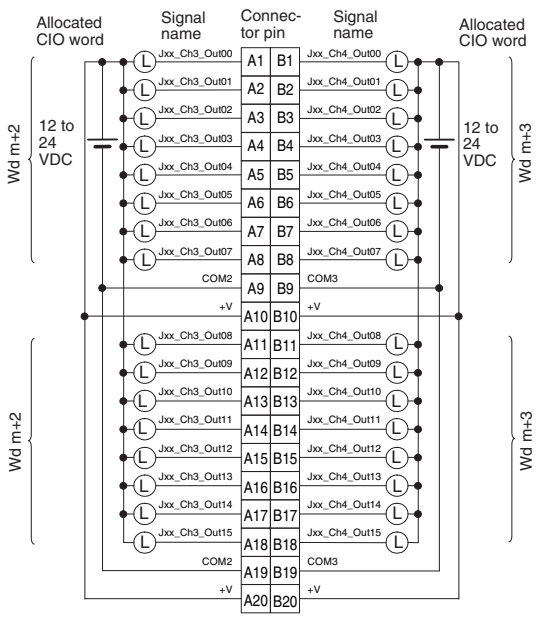
	• When wiring, pay careful attention to the polarity of the external power supply. The load may operate incorrectly if the polarity is reversed. • Be sure to wire both terminals A9 and A19 (COM0) of CN1. • Be sure to wire both terminals B9 and B19 (COM1) of CN1. • Be sure to wire both terminals A10 and A20 (+V) of CN1. • Be sure to wire both terminals B10 and B20 (+V) of CN1.	• When wiring, pay careful attention to the polarity of the external power supply. The load may operate incorrectly if the polarity is reversed. • Be sure to wire both terminals A9 and A19 (COM2) of CN2. • Be sure to wire both terminals B9 and B19 (COM3) of CN2. • Be sure to wire both terminals A10 and A20 (+V) of CN2. • Be sure to wire both terminals B10 and B20 (+V) of CN2.

● CJ1W-OD263 Transistor Output Unit (64 Points)

Name	64-point Transistor Output Unit with MIL Connectors (Sinking Outputs)
Model	CJ1W-OD263
Rated Voltage	12 to 24 VDC
Operating Load Voltage Range	10.2 to 26.4 VDC
Maximum Load Current	0.3 A/point, 1.6 A/common, 6.4 A/Unit
Maximum Inrush Current	3.0 A/point, 10 ms max.
Leakage Current	0.1 mA max.
Residual Voltage	1.5 V max.
ON Response Time	0.5 ms max.
OFF Response Time	1.0 ms max.
Insulation Resistance	20 MΩ between the external terminals and the GR terminal (100 VDC)
Dielectric Strength	1,000 VAC between the external terminals and the GR terminal for 1 minute at a leakage current of 10 mA max.
Number of Circuits	64 (16 points/common, 4 circuits)
Internal Current Consumption	170 mA max.
Fuse	None
External Power Supply	12 to 24 VDC, 50 mA min.
Weight	110 g max.
Circuit Configuration	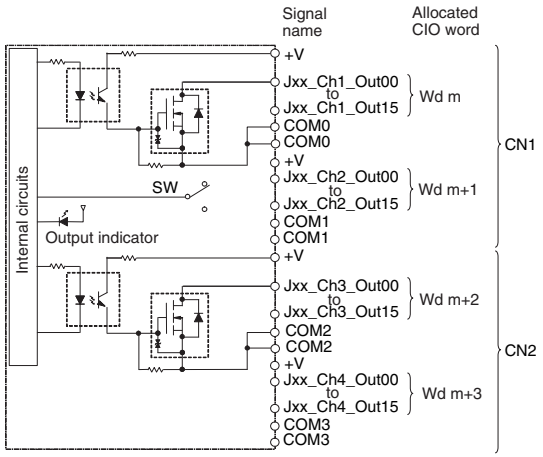

	CN1	CN2
External connection and terminal-device variable diagram	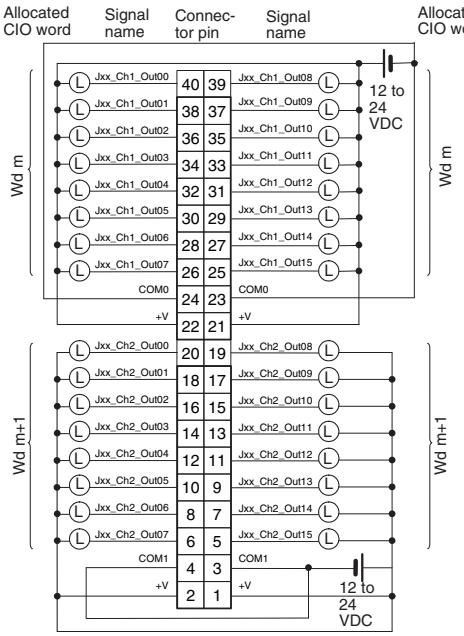	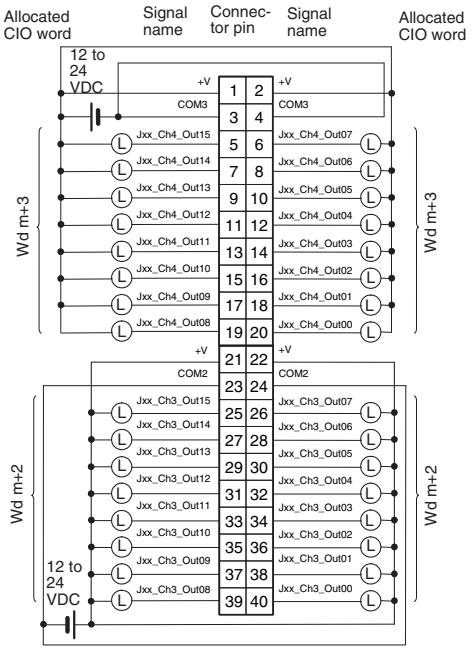
	• When wiring, pay careful attention to the polarity of the external power supply. The load may operate incorrectly if the polarity is reversed. • Be sure to wire both terminals 23 and 24 (COM0) of CN1. • Be sure to wire both terminals 3 and 4 (COM1) of CN1. • Be sure to wire both terminals 21 and 22 (+V) of CN1. • Be sure to wire both terminals 1 and 2 (+V) of CN1.	• When wiring, pay careful attention to the polarity of the external power supply. The load may operate incorrectly if the polarity is reversed. • Be sure to wire both terminals 23 and 24 (COM2) of CN2. • Be sure to wire both terminals 3 and 4 (COM3) of CN2. • Be sure to wire both terminals 21 and 22 (+V) of CN2. • Be sure to wire both terminals 1 and 2 (+V) of CN2.

● CJ1W-OD202 Transistor Output Unit (8 Points)

Name	8-point Transistor Output Unit with Terminal Block (Sourcing Outputs)
Model	CJ1W-OD202
Rated Voltage	24 VDC
Operating Load Voltage Range	20.4 to 26.4 VDC
Maximum Load Current	2 A/point, 8 A/Unit
Leakage Current	0.1 mA max.
Residual Voltage	1.5 V max.
ON Response Time	0.5 ms max.
OFF Response Time	1.0 ms max.
Load Short-circuit Protection	Detection current: 6 A min. Automatic restart after error clearance. (Refer to page A-96.)
Line Disconnection Detection	Detection current: 200 mA (Refer to page A-96.)
Insulation Resistance	20 MΩ between the external terminals and the GR terminal (100 VDC)
Dielectric Strength	1,000 VAC between the external terminals and the GR terminal for 1 minute at a leakage current of 10 mA max.
Number of Circuits	8 (4 points/common, 2 circuits)
Internal Current Consumption	110 mA max.
Fuse	None
External Power Supply	24 VDC, 50 mA min.
Weight	120 g max.
Circuit Configuration	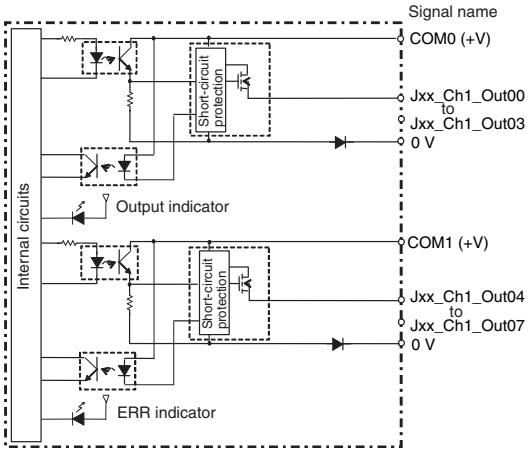 • When an overcurrent or line disconnection is detected, the ERR indicator will light. At the same time, the corresponding bit (two points per bit) in the Basic I/O Unit Information Area system-defined variable will change to TRUE.

External connection and terminal-device variable diagram	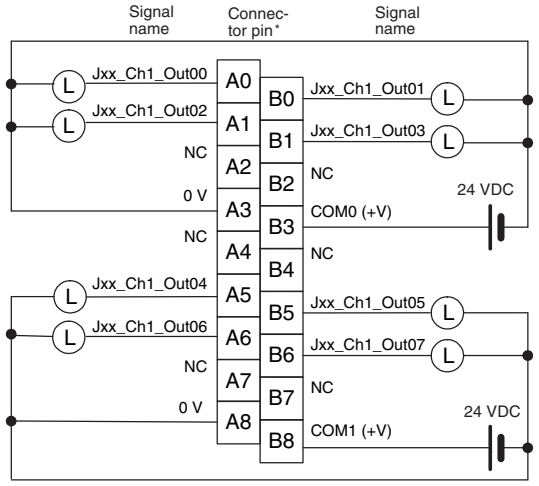 • When wiring, pay careful attention to the polarity of the external power supply. The load may operate incorrectly if the polarity is reversed.

* Terminal numbers A0 to A8 and B0 to B8 are used in the external connection and terminal-device variable diagrams. They are not printed on the Units.

● CJ1W-OD204 Transistor Output Unit (8 Points)

Name	8-point Transistor Output Unit with Terminal Block (Sourcing Outputs)
Model	CJ1W-OD204
Rated Voltage	24 VDC
Operating Load Voltage Range	20.4 to 26.4 VDC
Maximum Load Current	0.5 A/point, 4.0 A/Unit
Leakage Current	0.1 mA max.
Residual Voltage	1.5 V max.
ON Response Time	0.5 ms max.
OFF Response Time	1.0 ms max.
Load Short-circuit Protection	Detection current: 0.7 to 2.5 A Automatic restart after error clearance. (Refer to page A-99.)
Insulation Resistance	20 MΩ between the external terminals and the GR terminal (100 VDC)
Dielectric Strength	1,000 VAC between the external terminals and the GR terminal for 1 minute at a leakage current of 10 mA max.
Number of Circuits	8 (8 points/common, 1 circuit)
Internal Current Consumption	100 mA max.
Fuse	None
External Power Supply	20.4 to 26.4 VDC, 40 mA min.
Weight	120 g max.
Circuit Configuration	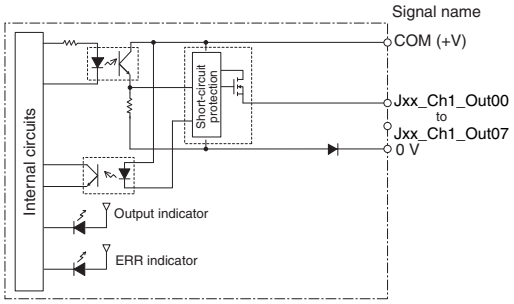 • When an overcurrent is detected, the ERR indicator will light. At the same time, the corresponding bit in the Basic I/O Unit Information Area system-defined variable will change to TRUE.
External connection and terminal-device variable diagram	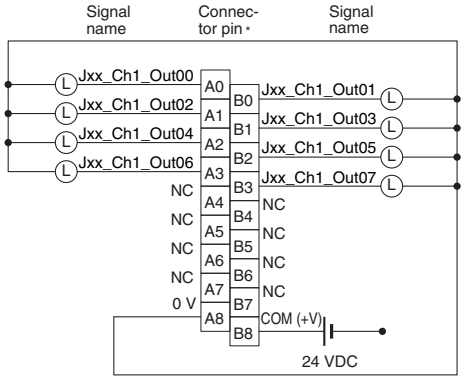 • When wiring, pay careful attention to the polarity of the external power supply. The load may operate incorrectly if the polarity is reversed.

* Terminal numbers A0 to A8 and B0 to B8 are used in the external connection and terminal-device variable diagrams. They are not printed on the Units.

● CJ1W-OD212 Transistor Output Unit (16 Points)

Name	16-point Transistor Output Unit with Terminal Block (Sourcing Outputs)
Model	CJ1W-OD212
Rated Voltage	24 VDC
Operating Load Voltage Range	20.4 to 26.4 VDC
Maximum Load Current	0.5 A/point, 5.0 A/Unit
Maximum Inrush Current	0.1 mA max.
Leakage Current	1.5 V max.
ON Response Time	0.5 ms max.
OFF Response Time	1.0 ms max.
Load Short-circuit Protection	Detection current: 0.7 to 2.5 A Automatic restart after error clearance. (Refer to page A-99.)
Insulation Resistance	20 MΩ between the external terminals and the GR terminal (100 VDC)
Dielectric Strength	1,000 VAC between the external terminals and the GR terminal for 1 minute at a leakage current of 10 mA max.
Number of Circuits	16 (16 points/common, 1 circuit)
Internal Current Consumption	5 VDC, 100 mA max.
External Power Supply	20.4 to 26.4 VDC, 40 mA min.
Weight	120 g max.
Circuit Configuration	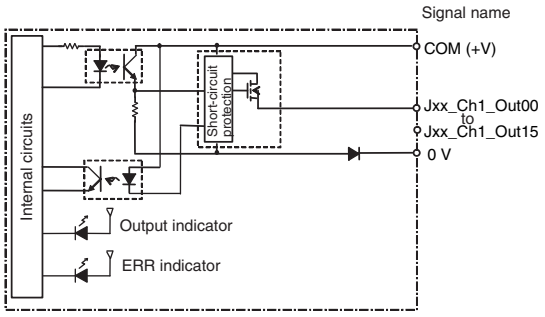 • When an overcurrent is detected, the ERR indicator will light. At the same time, the corresponding bit in the Basic I/O Unit Information Area system-defined variable will change to TRUE.
External connection and terminal-device variable diagram	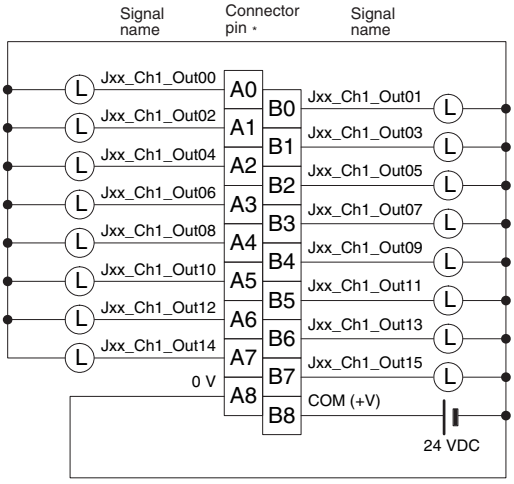 • When wiring, pay careful attention to the polarity of the external power supply. The load may operate incorrectly if the polarity is reversed.

* Terminal numbers A0 to A8 and B0 to B8 are used in the external connection and terminal-device variable diagrams. They are not printed on the Units.

● CJ1W-OD232 Transistor Output Unit (32 Points)

Name	32-point Transistor Output Unit with MIL Connector (Sourcing Outputs)
Model	CJ1W-OD232
Rated Voltage	24 VDC
Operating Load Voltage Range	20.4 to 26.4 VDC
Maximum Load Current	0.5 A/point, 2.0 A/common, 4.0 A/Unit
Leakage Current	0.1 mA max.
Residual Voltage	1.5 V max.
ON Response Time	0.5 ms max.
OFF Response Time	1.0 ms max.
Load Short-circuit Protection	Detection current: 0.7 to 2.5 A Automatic restart after error clearance. (Refer to page A-99.)
Insulation Resistance	20 MΩ between the external terminals and the GR terminal (100 VDC)
Dielectric Strength	1,000 VAC between the external terminals and the GR terminal for 1 minute at a leakage current of 10 mA max.
Number of Circuits	32 (16 points/common, 2 circuits)
Internal Current Consumption	5 VDC 150 mA max.
External Power Supply	20.4 to 26.4 VDC, 70 mA min.
Weight	80 g max.
Accessories	None
Circuit Configuration	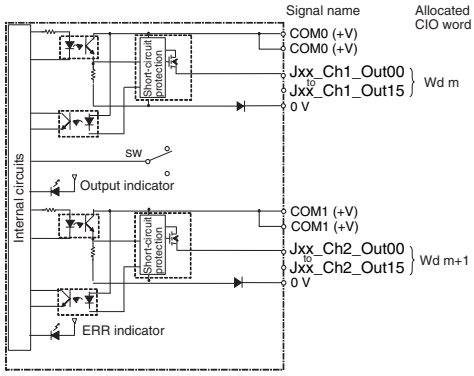 • When an overcurrent is detected, the ERR indicator will light. At the same time, the corresponding bit (one bit for each common) in the Basic I/O Unit Information Area system-defined variable will change to TRUE.

External connection and terminal-device variable diagram	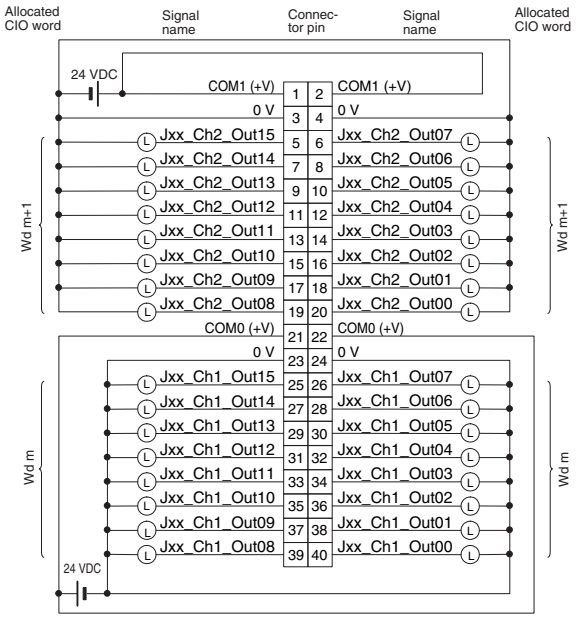 • When wiring, pay careful attention to the polarity of the external power supply. The load may operate incorrectly if the polarity is reversed. • Be sure to wire both terminals 21 and 22 (COM0 (+V)). • Be sure to wire both terminals 1 and 2 (COM1 (+V)). • Be sure to wire both terminals 3 and 4 (0 V). • Be sure to wire both terminals 23 and 24 (0 V).

● CJ1W-OD262 Transistor Output Unit (64 Points)

Name	64-point Transistor Output Unit with MIL Connectors (Sourcing Outputs)
Model	CJ1W-OD262
Rated Voltage	12 to 24 VDC
Operating Load Voltage Range	10.2 to 26.4 VDC
Maximum Load Current	0.3 A/point, 1.6 A/common, 6.4 A/Unit
Maximum Inrush Current	3.0 A/point, 10 ms max.
Leakage Current	0.1 mA max.
Residual Voltage	1.5 V max.
ON Response Time	0.5 ms max.
OFF Response Time	1.0 ms max.
Insulation Resistance	20 MΩ between the external terminals and the GR terminal (100 VDC)
Dielectric Strength	1,000 VAC between the external terminals and the GR terminal for 1 minute at a leakage current of 10 mA max.
Number of Circuits	64 (16 points/common, 4 circuits)
Internal Current Consumption	170 mA max. (5 VDC)
Fuse	None
External Power Supply	10.2 to 26.4 VDC, 50 mA min.
Weight	110 g max.
Accessories	None

Circuit Configuration

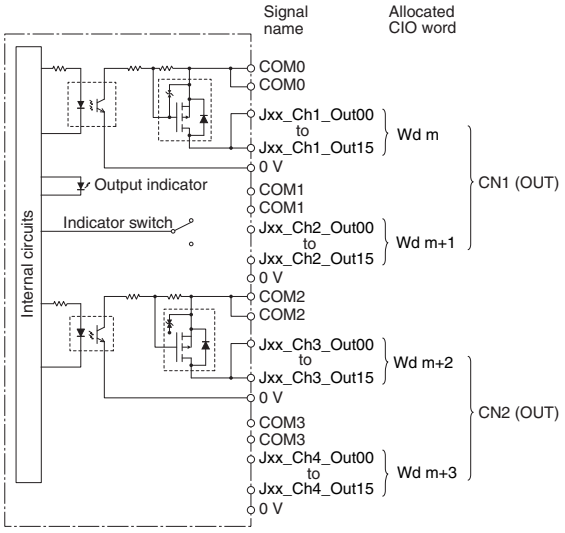

External connection and terminal-device variable diagram

CN1

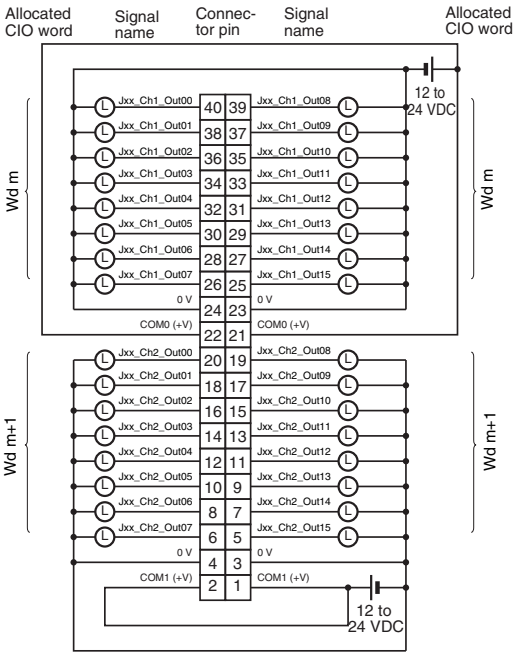

- When wiring, pay careful attention to the polarity of the external power supply. The load may operate incorrectly if the polarity is reversed.
- Be sure to wire both terminals 21 and 22 (COM0 (+V)) of CN1.
- Be sure to wire both terminals 1 and 2 (COM1 (+V)) of CN1.
- Be sure to wire both terminals 23 and 24 (0 V) of CN1.
- Be sure to wire both terminals 3 and 4 (0 V) of CN1.

CN2

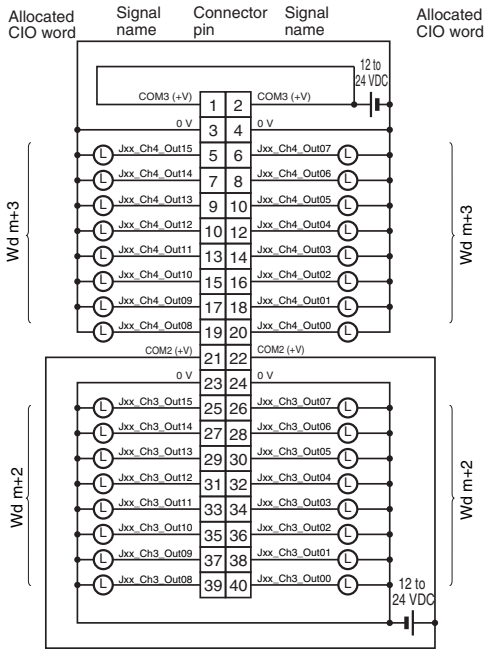

- When wiring, pay careful attention to the polarity of the external power supply. The load may operate incorrectly if the polarity is reversed.
- Be sure to wire both terminals 21 and 22 (COM2 (+V)) of CN2.
- Be sure to wire both terminals 1 and 2 (COM3 (+V)) of CN2.
- Be sure to wire both terminals 23 and 24 (0 V) of CN2.
- Be sure to wire both terminals 3 and 4 (0 V) of CN2.

Mixed I/O Units

● CJ1W-MD231 DC Input/Transistor Output Unit (24 VDC, 16 Inputs/16 Outputs)

Name	16-point DC Input/16-point Transistor Output Unit with Fujitsu Connectors (Sinking Outputs)		
Model	CJ1W-MD231		
Output section (CN1)		**Input section (CN2)**	
Rated Voltage	12 to 24 VDC	**Rated Input Voltage**	24 VDC
Operating Load Voltage Range	10.2 to 26.4 VDC	**Operating Input Voltage**	20.4 to 26.4 VDC
Maximum Load Current	0.5 A/point, 2.0 A/Unit	**Input Impedance**	3.3 kΩ
Maximum Inrush Current	4.0 A/point, 10 ms max.	**Input Current**	7 mA typical (at 24 VDC)
Leakage Current	0.1 mA max.	**ON Voltage/ON Current**	14.4 VDC min./3 mA min.
Residual Voltage	1.5 V max.	**OFF Voltage/OFF Current**	5 VDC max./1 mA max.
ON Response Time	0.1 ms max.	**ON Response Time**	8.0 ms max. (Can be set to between 0 and 32 ms in the Unit Information settings.)*
OFF Response Time	0.8 ms max.		
No. of Circuits	16 (16 points/common, 1 circuit)	**OFF Response Time**	8.0 ms max. (Can be set to between 0 and 32 ms in the Unit Information settings.)*
Fuse	None		
External Power Supply	12 to 24 VDC, 20 mA min.	**No. of Circuits**	16 (16 points/common, 1 circuit)
		Number of Simultaneously ON Points	75% (at 24 VDC)
Insulation Resistance	20 MΩ between the external terminals and the GR terminal (at 100 VDC)		
Dielectric Strength	1,000 VAC between the external terminals and the GR terminal for 1 minute at a leakage current of 10 mA max.		
Internal Current Consumption	5 VDC 130 mA max.		
Weight	90 g max.		
Accessories	None		

Circuit Configuration

CN1 (OUT)

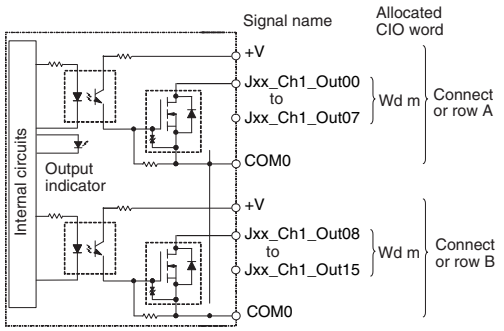

CN2 (IN)

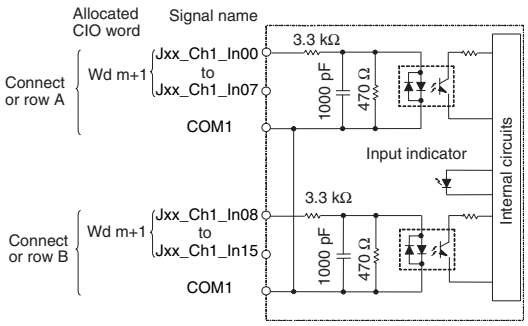

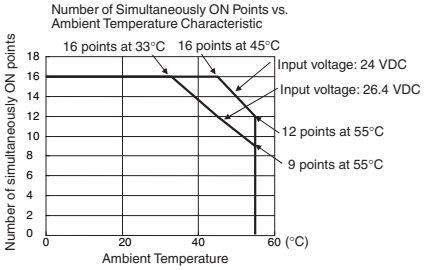

	CN1 (OUT)	CN2 (IN)
External connection and terminal-device variable diagram	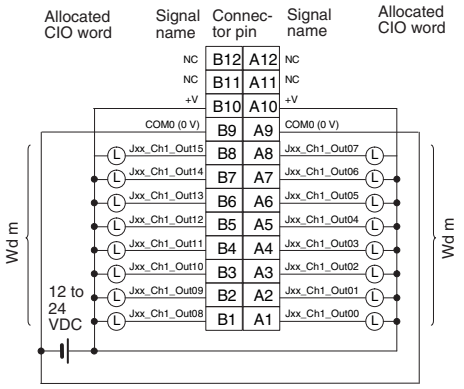	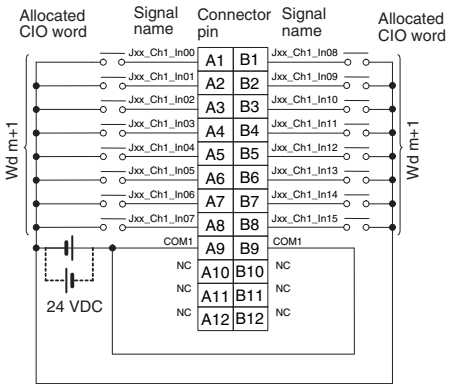
	• When wiring, pay careful attention to the polarity of the external power supply. The load may operate incorrectly if polarity is reversed. • Be sure to wire both pins A9 and B9 (COM0 (0 V)) of CN1. • Be sure to wire both pins A10 and B10 (+V) of CN1.	• When wiring, pay careful attention to the polarity of the external power supply. The load may operate incorrectly if polarity is reversed. • Be sure to wire both pins A9 and B9 (COM1) of CN2, and set the same polarity for both pins.

* The ON response time will be 20 μs maximum and OFF response time will be 400 μs maximum even if the response times are set to 0 ms due to internal element delays.

● CJ1W-MD233 DC Input/Transistor Output Unit (24 VDC, 16 Inputs/16 Outputs)

Name	16-point DC Input/16-point Transistor Output Unit with MIL Connectors (Sinking Outputs)		
Model	CJ1W-MD233		
Output section (CN1)		**Input section (CN2)**	
Rated Voltage	12 to 24 VDC	**Rated Input Voltage**	24 VDC
Operating Load Voltage Range	10.2 to 26.4 VDC	**Operating Input Voltage**	20.4 to 26.4 VDC
Maximum Load Current	0.5 A/point, 2.0 A/Unit	**Input Impedance**	3.3 kΩ
Maximum Inrush Current	4.0 A/point, 10 ms max.	**Input Current**	7 mA typical (at 24 VDC)
Leakage Current	0.1 mA max.	**ON Voltage/ON Current**	14.4 VDC min./3 mA min.
Residual Voltage	1.5 V max.	**OFF Voltage/OFF Current**	5 VDC max./1 mA max.
ON Response Time	0.1 ms max.	**ON Response Time**	8.0 ms max. (Can be set to between 0 and 32 ms in the Unit Information settings.)*
OFF Response Time	0.8 ms max.		
No. of Circuits	16 (16 points/common, 1 circuit)	**OFF Response Time**	8.0 ms max. (Can be set to between 0 and 32 ms in the Unit Information settings.)*
Fuse	None		
External Power Supply	12 to 24 VDC, 20 mA min.	**No. of Circuits**	16 (16 points/common, 1 circuit)
		Number of Simultaneously ON Points	75% (at 24 VDC)
Insulation Resistance	20 MΩ between the external terminals and the GR terminal (at 100 VDC)		
Dielectric Strength	1,000 VAC between the external terminals and the GR terminal for 1 minute at a leakage current of 10 mA max.		
Internal Current Consumption	5 VDC 130 mA max.		
Weight	90 g max.		
Accessories	None		

Circuit Configuration

CN1 (OUT)

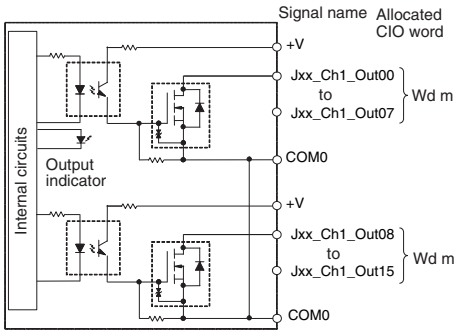

CN2 (IN)

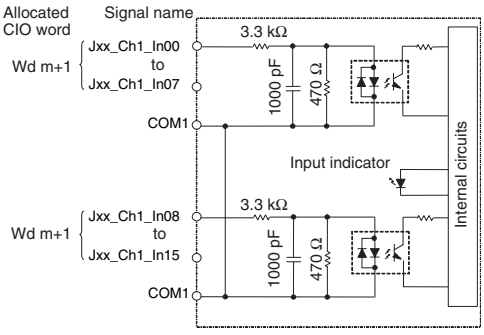

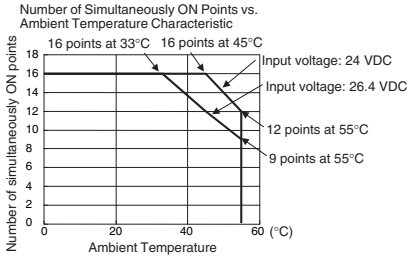

	CN1 (OUT)	CN2 (IN)
External connection and terminal-device variable diagram	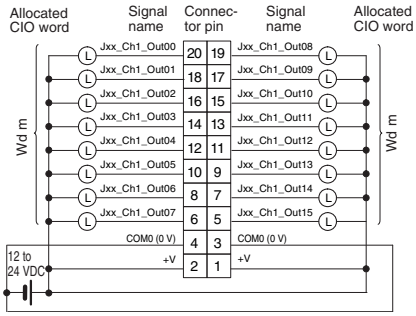 • When wiring, pay careful attention to the polarity of the external power supply. The load may operate incorrectly if polarity is reversed. • Be sure to wire both terminals 3 and 4 (COM0 (0 V)) of CN1. • Be sure to wire both terminals 1 and 2 (+V) of CN1.	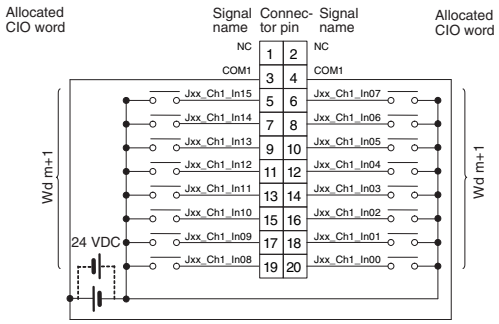 • When wiring, pay careful attention to the polarity of the external power supply. The load may operate incorrectly if polarity is reversed. • Be sure to wire both pins 3 and 4 (COM1) of CN2, and set the same polarity for both pins.

* The ON response time will be 20 μs maximum and OFF response time will be 400 μs maximum even if the response times are set to 0 ms due to internal element delays.

● CJ1W-MD261 DC Input/Transistor Output Unit (24 VDC 32 Inputs/32 Outputs)

Name	32-point DC Input/32-point Transistor Output Unit with Fujitsu Connectors (Sinking Outputs)		
Model	CJ1W-MD261		
Output section (CN1)		**Input section (CN2)**	
Rated Voltage	12 to 24 VDC	**Rated Input Voltage**	24 VDC
Operating Load Voltage Range	10.2 to 26.4 VDC	**Operating Input Voltage**	20.4 to 26.4 VDC
Maximum Load Current	0.3 A/point, 1.6 A/common, 3.2 A/Unit	**Input Impedance**	5.6 kΩ
Maximum Inrush Current	3.0 A/point, 10 ms max.	**Input Current**	4.1 mA typical (at 24 VDC)
Leakage Current	0.1 mA max.	**ON Voltage/ON Current**	19.0 VDC min./3 mA min. *1
Residual Voltage	1.5 V max.	**OFF Voltage/OFF Current**	5 VDC max./1 mA max.
ON Response Time	0.5 ms max.	**ON Response Time**	8.0 ms max. (Can be set to between 0 and 32 ms in the Unit Information settings.)*2
OFF Response Time	1.0 ms max.		
No. of Circuits	32 (16 points/common, 2 circuits)	**OFF Response Time**	8.0 ms max. (Can be set to between 0 and 32 ms in the Unit Information settings.)*2
Fuse	None		
External Power Supply	12 to 24 VDC, 30 mA min.	**No. of Circuits**	32 (16 points/common, 2 circuits)
		Number of Simultaneously ON Points	75% (24 points) (at 24 VDC)
Insulation Resistance	20 MΩ between the external terminals and the GR terminal (at 100 VDC)		
Dielectric Strength	1,000 VAC between the external terminals and the GR terminal for 1 minute at a leakage current of 10 mA max.		
Internal Current Consumption	5 VDC 140 mA max.		
Weight	110 g max.		
Accessories	None		

Circuit Configuration

CN1 (OUT)

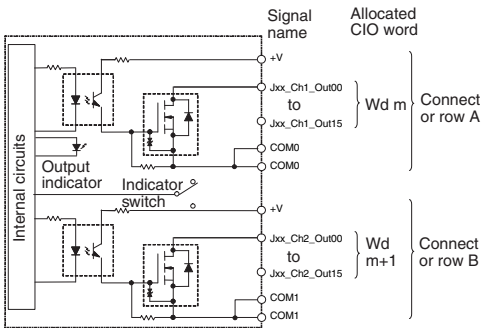

CN2 (IN)

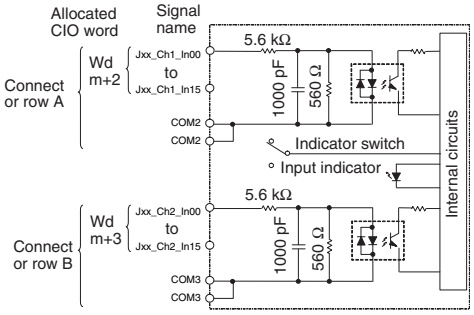

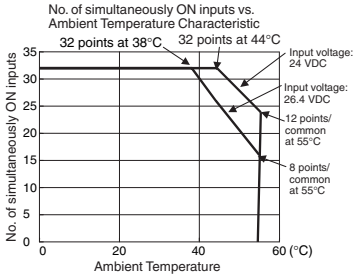

External connection and terminal-device variable diagram

CN1 (OUT)

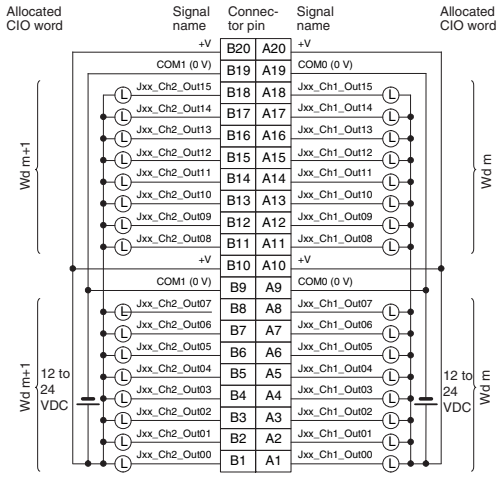

- Be sure to wire both terminals A19 and A9 (COM0 (0 V)) of CN1.
- Be sure to wire both terminals B19 and B9 (COM1 (0 V)) of CN1.
- Be sure to wire both terminals A20 and A10 (+V) of CN1.
- Be sure to wire both terminals B20 and B10 (+V) of CN1.
- When wiring, pay careful attention to the polarity of the external power supply. The load may operate incorrectly if polarity is reversed.

CN2 (IN)

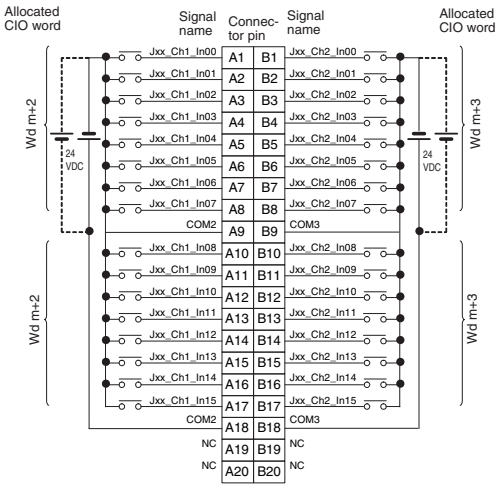

- Be sure to wire both pins A9 and A18 (COM2) of CN2, and set the same polarity for both pins.
- Be sure to wire both pins B9 and B18 (COM3) of CN2, and set the same polarity for both pins.
- When wiring, pay careful attention to the polarity of the external power supply. The load may operate incorrectly if polarity is reversed.

*1 Observe the following restrictions when connecting to a 2-wire sensor.

- Make sure the input power supply voltage is larger than the ON voltage (19 V) plus the residual voltage of the sensor (approx. 3 V).
- Use a sensor with a minimum load current of 3 mA min.
- Connect bleeder resistance if you connect a sensor with a minimum load current of 5 mA or higher.

*2 The ON response time will be 120 μs maximum and OFF response time will be 400 μs maximum even if the response times are set to 0 ms due to internal element delays.

● CJ1W-MD263 DC Input/Transistor Output Unit (24 VDC 32 Inputs/32 Outputs)

Name	32-point DC Input/32-point Transistor Output Unit with MIL Connectors (Sinking Outputs)		
Model	CJ1W-MD263		
Output section (CN1)		**Input section (CN2)**	
Rated Voltage	12 to 24 VDC	**Rated Input Voltage**	24 VDC
Operating Load Voltage Range	10.2 to 26.4 VDC	**Operating Input Voltage**	20.4 to 26.4 VDC
Maximum Load Current	0.3 A/point, 1.6 A/common, 3.2 A/Unit	**Input Impedance**	5.6 kΩ
Maximum Inrush Current	3.0 A/point, 10 ms max.	**Input Current**	4.1 mA typical (at 24 VDC)
Leakage Current	0.1 mA max.	**ON Voltage/ON Current**	19.0 VDC min./3 mA min.*1
Residual Voltage	1.5 V max.	**OFF Voltage/OFF Current**	5 VDC max./1 mA max.
ON Response Time	0.5 ms max.	**ON Response Time**	8.0 ms max. (Can be set to between 0 and 32 ms in the Unit Information settings.)*2
OFF Response Time	1.0 ms max.		
No. of Circuits	32 (16 points/common, 2 circuits)	**OFF Response Time**	8.0 ms max. (Can be set to between 0 and 32 ms in the Unit Information settings.)*2
Fuse	None		
External Power Supply	12 to 24 VDC, 30 mA min.	**No. of Circuits**	32 (16 points/common, 2 circuits)
		Number of Simultaneously ON Points	75% (24 points) (at 24 VDC)
Insulation Resistance	20 MΩ between the external terminals and the GR terminal (at 100 VDC)		
Dielectric Strength	1,000 VAC between the external terminals and the GR terminal for 1 minute at a leakage current of 10 mA max.		
Internal Current Consumption	5 VDC 140 mA max.		
Weight	110 g max.		
Accessories	None		

Circuit Configuration

CN1 (OUT)

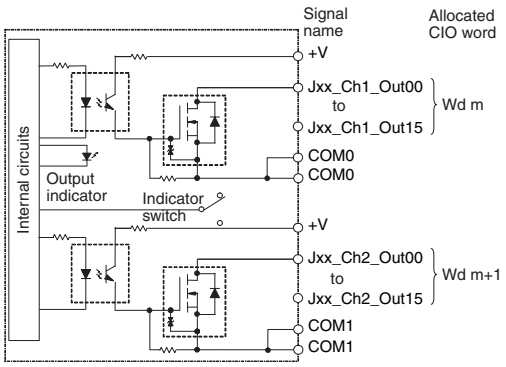

CN2 (IN)

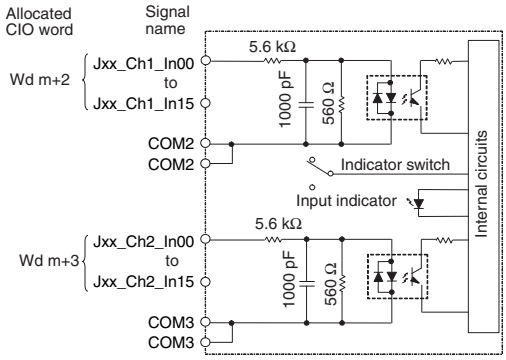

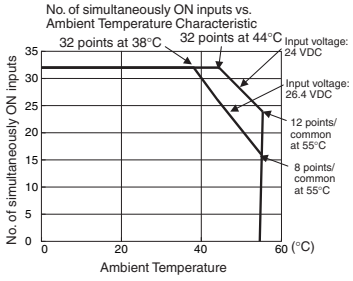

<table>
<tr><th></th><th>CN1 (OUT)</th><th>CN2 (IN)</th></tr>
<tr><td>External connection and terminal-device variable diagram</td><td>
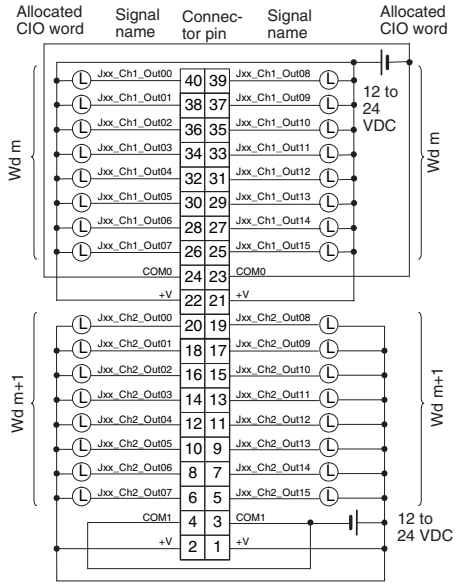

Be sure to wire both terminals 23 and 24 (COM0) of CN1.
Be sure to wire both terminals 3 and 4 (COM1) of CN1.
Be sure to wire both terminals 21 and 22 (+V) of CN1.
Be sure to wire both terminals 1 and 2 (+V) of CN1.
When wiring, pay careful attention to the polarity of the external power supply. The load may operate incorrectly if polarity is reversed.

</td><td>
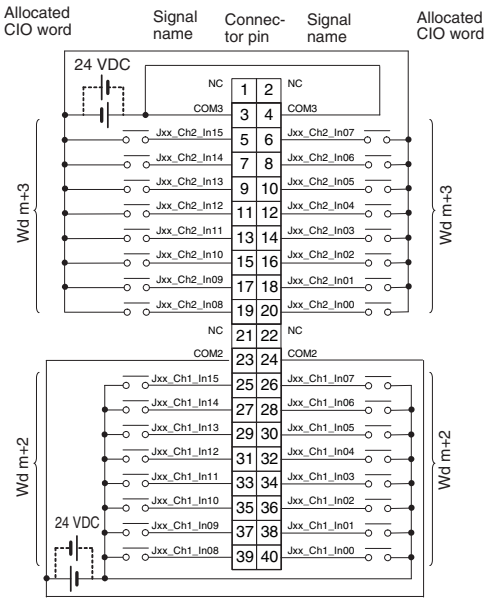

Be sure to wire both pins 23 and 24 (COM2) of CN2, and set the same polarity for both pins.
Be sure to wire both pins 3 and 4 (COM3) of CN2, and set the same polarity for both pins.
When wiring, pay careful attention to the polarity of the external power supply. The load may operate incorrectly if polarity is reversed.

</td></tr>
</table>

*1 Observe the following restrictions when connecting to a 2-wire sensor.

- Make sure the input power supply voltage is larger than the ON voltage (19 V) plus the residual voltage of the sensor (approx. 3 V).
- Use a sensor with a minimum load current of 3 mA min.
- Connect bleeder resistance if you connect a sensor with a minimum load current of 5 mA or higher.

*2 The ON response time will be 120 μs maximum and OFF response time will be 400 μs maximum even if the response times are set to 0 ms due to internal element delays.

● CJ1W-MD232 DC Input/Transistor Output Unit (24 VDC, 16 inputs/16 Outputs)

Name	16-point DC Input/16-point Transistor Output Unit with MIL Connectors (Sourcing Outputs)		
Model	CJ1W-MD232		
Output section (CN1)		**Input section (CN2)**	
Rated Voltage	24 VDC	**Rated Input Voltage**	24 VDC
Operating Load Voltage Range	20.4 to 26.4 VDC	**Operating Input Voltage**	20.4 to 26.4 VDC
Maximum Load Current	0.5 A/point, 2.0 A/Unit	**Input Impedance**	3.3 kΩ
Leakage Current	0.1 mA max.	**Input Current**	7 mA typical (at 24 VDC)
Residual Voltage	1.5 V max.	**ON Voltage/ON Current**	14.4 VDC min./3 mA min.
ON Response Time	0.5 ms max.	**OFF Voltage/OFF Current**	5 VDC max./1 mA max.
OFF Response Time	1.0 ms max.	**ON Response Time**	8.0 ms max. (Can be set to between 0 and 32 ms in the Unit Information settings.)*
Load Short-circuit Protection	Detection current: 0.7 to 2.5 A min. Automatic restart after error clearance. (Refer to page A-99.)	**OFF Response Time**	8.0 ms max. (Can be set to between 0 and 32 ms in the Unit Information settings.)*
No. of Circuits	16 (16 points/common, 1 circuit)	**No. of Circuits**	16 (16 points/common, 1 circuit)
External Power Supply	20.4 to 26.4 VDC, 40 mA min.	**Number of Simultaneously ON Points**	75% (at 24 VDC)
Insulation Resistance	20 MΩ between the external terminals and the GR terminal (at 100 VDC)		
Dielectric Strength	1,000 VAC between the external terminals and the GR terminal for 1 minute at a leakage current of 10 mA max.		
Internal Current Consumption	5 VDC 130 mA max.		
Weight	100 g max.		
Accessories	None		

Circuit Configuration

CN1 (OUT)

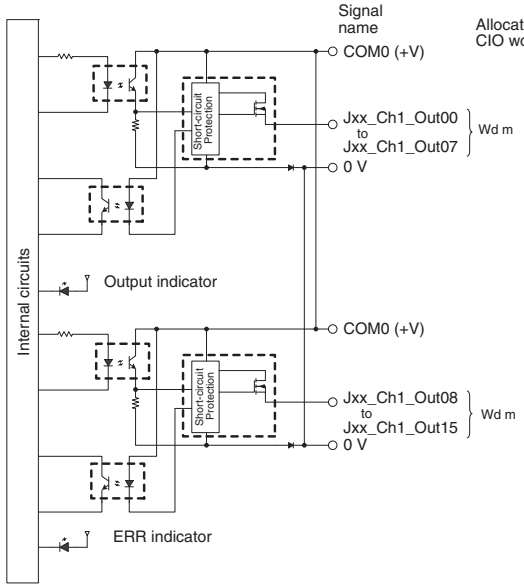

CN2 (IN)

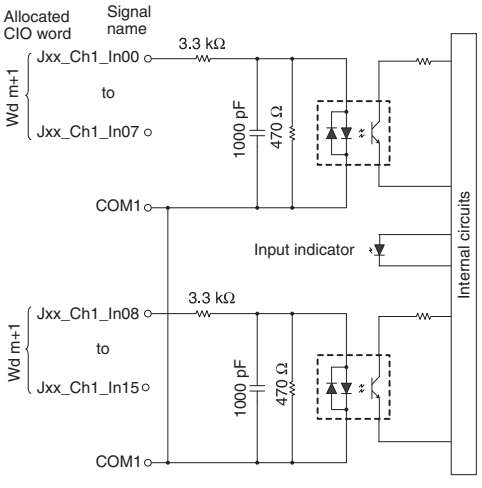

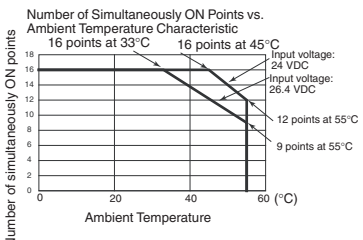

<table>
<tr><th rowspan="2">External connection and terminal-device variable diagram</th><th>CN1 (OUT)</th><th>CN2 (IN)</th></tr>
<tr>
<td>
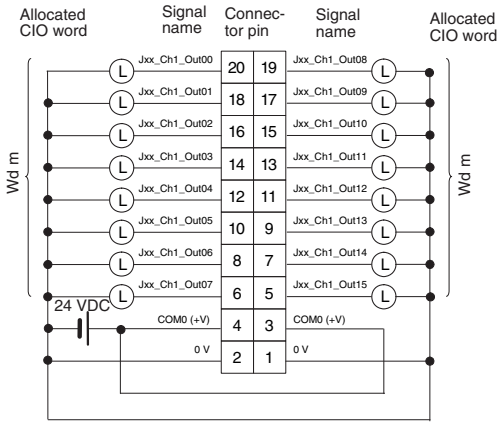

When wiring, pay careful attention to the polarity of the external power supply. The load may operate incorrectly if polarity is reversed.
Be sure to wire both terminals 3 and 4 ((COM0 (+V)) of CN1.
Be sure to wire both terminals 1 and 2 (0 V) of CN1.

</td>
<td>
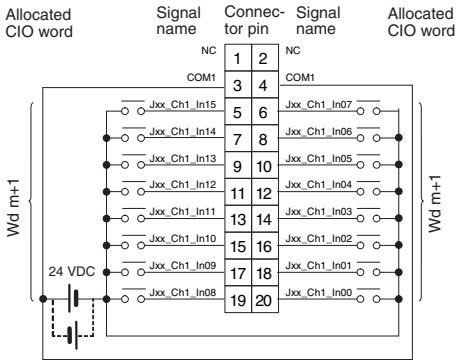

When wiring, pay careful attention to the polarity of the external power supply. The load may operate incorrectly if polarity is reversed.
Be sure to wire both pins 3 and 4 (COM1) of CN2, and set the same polarity for both pins.

</td>
</tr>
</table>

* The ON response time will be 20 μs maximum and OFF response time will be 400 μs maximum even if the response times are set to 0 ms due to internal element delays.

● CJ1W-MD563 TTL I/O Unit (32 Inputs/32 Outputs)

Name	32-point Input /32-point Output TTL I/O Unit with MIL Connectors		
Model	CJ1W-MD563		
Output section (CN1)		**Input section (CN2)**	
Rated Voltage	5 VDC±10%	**Rated Input Voltage**	5 VDC±10%
Operating Load Voltage Range	4.5 to 5.5 VDC	**Input Impedance**	1.1 kΩ
Maximum Load Current	35 mA/point, 560 mA/common, 1.12 A/Unit	**Input Current**	Approx. 3.5 mA (at 5 VDC)
Leakage Current	0.1 mA max.	**ON Voltage**	3.0 VDC min.
Residual Voltage	0.4 V max.	**OFF Voltage**	1.0 VDC max.
ON Response Time	0.2 ms max.	**ON Response Time**	8.0 ms max. (Can be set to between 0 and 32 ms in the Unit Information settings.)*
OFF Response Time	0.3 ms max.	**OFF Response Time**	
No. of Circuits	32 points (16 points/common, 2 circuits)		8.0 ms max. (Can be set to between 0 and 32 ms in the Unit Information settings.)*
Fuse	None	**No. of Circuits**	32 points (16 points/common, 2 circuits)
External Power Supply	5 VDC±10%, 40 mA min. (1.2 mA × No. of ON points)	**Number of Simultaneously ON Points**	100% (16 points/common)
Insulation Resistance	20 MΩ between the external terminals and the GR terminal (at 100 VDC)		
Dielectric Strength	1,000 VAC between the external terminals and the GR terminal for 1 minute at a leakage current of 10 mA max.		
Internal Current Consumption	5 VDC 190 mA max.		
Weight	110 g max.		
Accessories	None		
Circuit Configuration	**CN1 (OUT)**	**CN2 (IN)**	

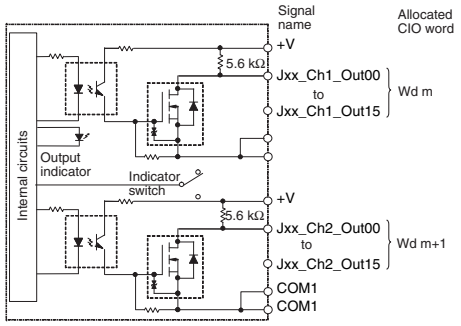

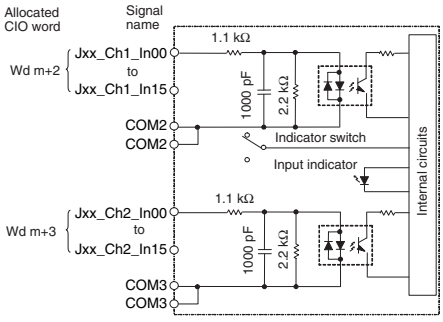

<table>
<tr><th></th><th>CN1 (OUT)</th><th>CN2 (IN)</th></tr>
<tr><td>External connection and terminal-device variable diagram</td>
<td> 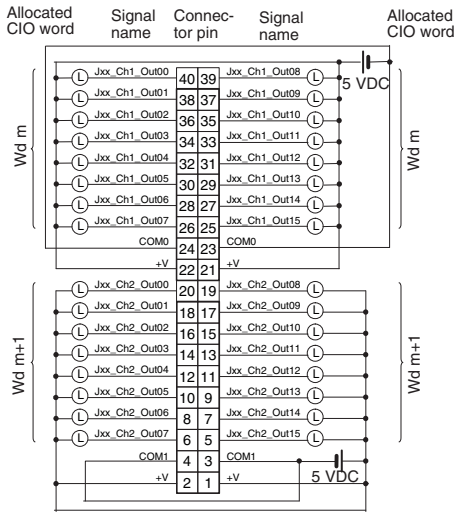

When wiring, pay careful attention to the polarity of the external power supply. The load may operate incorrectly if the polarity is reversed.
Be sure to wire both terminals 23 and 24 (COM0) of CN1.
Be sure to wire both terminals 3 and 4 (COM1) of CN1.
Be sure to wire both terminals 21 and 22 (+V) of CN1.
Be sure to wire both terminals 1 and 2 (+V) of CN1.
</td>
<td> 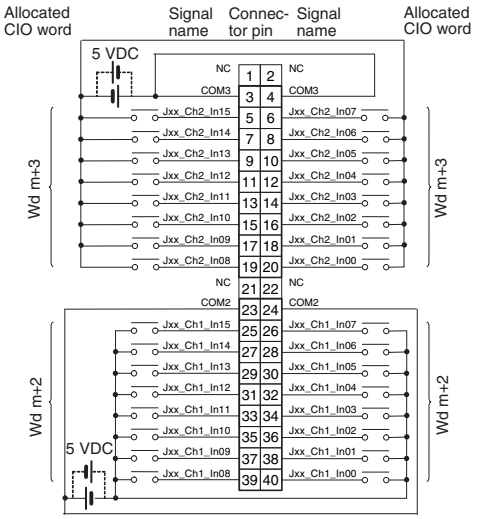

When wiring, pay careful attention to the polarity of the external power supply. The load may operate incorrectly if the polarity is reversed.
Be sure to wire both pins 23 and 24 (COM2) of CN2, and set the same polarity for both pins.
Be sure to wire both pins 3 and 4 (COM3) of CN2, and set the same polarity for both pins.
</td></tr>
</table>

* The ON response time will be 120 μs maximum and OFF response time will be 400 μs maximum even if the response times are set to 0 ms due to internal element delays.

A-2-3 Precautions on Contact Output Units

Service Life Expectancy

The service life expectancy of the relays (NY-24W-K-IE) in the CJ1W-OC201/211 Contact Output Units depends on the type of load, the contact current, and the ambient temperature. Use the following diagrams to calculate the relay service life based on the operating conditions, and replace the relay before the end of its service life.

Contact Current vs. Service Life Characteristic

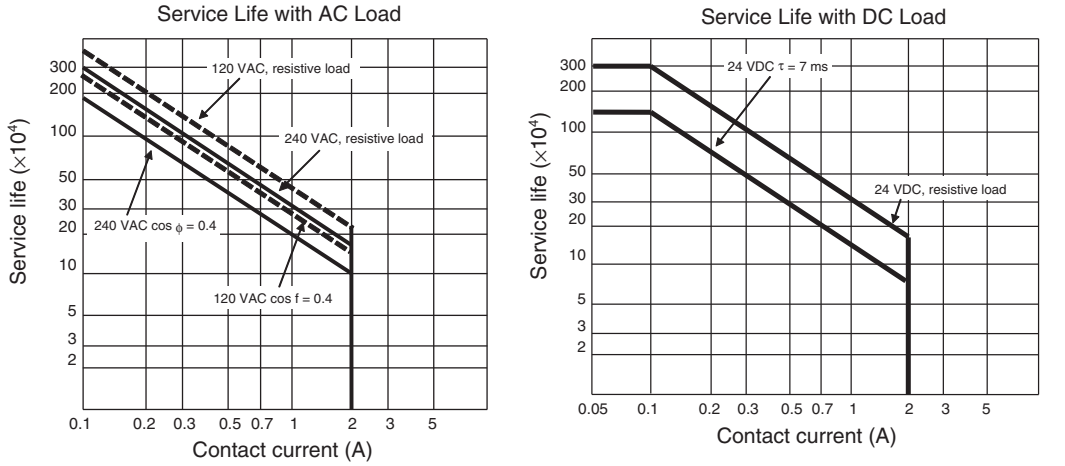

Switching frequency: 1,800 operations/hour max.

Precautions for Correct Use

The above charts show the life characteristics for the individual relays. Do not exceed the specifications of the Relay Output Units. If a switching capacity exceeding the specifications is used, the reliability and life expectancy of other parts will be reduced and the Unit may malfunction.

Inductive Load

The life of the Relay varies with the load inductance. If any inductive load is connected to the Contact Output Unit, use an arc killer with the Contact Output Unit. (See next page.)

Be sure to connect a diode in parallel with every DC inductive load that is connected to the Contact Output Unit. The usage of an arc killer has a significant effect on the service life of the contacts.

Contact Protection Circuit

Arc killers are used with the Contact Output Unit in order to prolong the life of each Relay mounted to the Contact Output Unit, prevent noise, and reduce the generation of carbide and nitrate deposits. However, if arc killers are used incorrectly, they can reduce relay life. Using an arc killer can also cause a delay in the resetting time (shut-off time). Arc killer circuit examples are listed in the following table.

Circuit		Current		Characteristic	Required element
		AC	DC		
CR method	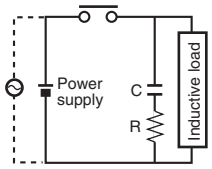	Yes	Yes	If the load is a relay or solenoid, there is a delay in the resetting time. If the supply voltage is 24 or 48 V, insert the arc killer in parallel with the load. If the supply voltage is 100 to 200 V, insert the arc killer between the contacts.	The capacitance of the capacitor should be approx. 1 to 0.5 μF per contact current of 1 A and resistance of the resistor should be approx. 0.5 to 1 Ω per contact voltage of 1 V. These values, however, vary with the load and the characteristics of the relay. Decide these values from experiments, and take into consideration that the capacitance suppresses spark discharge when the contacts are separated and the resistance limits the current that flows into the load when the circuit is closed again. The dielectric strength of the capacitor must be 200 to 300 V. If the circuit is an AC circuit, use a capacitor with no polarity.
Diode method	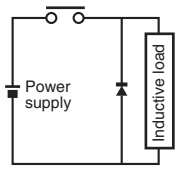	No	Yes	The diode connected in parallel with the load changes energy accumulated by the coil into a current, which then flows into the coil so that the current will be converted into Joule heat by the resistance of the inductive load. This delay in the resetting time caused by this method is longer than that caused by the CR method.	The reversed dielectric strength value of the diode must be at least 10 times as large as the circuit voltage value. The forward current of the diode must be the same as or larger than the load current. The reversed dielectric strength value of the diode may be two to three times larger than the supply voltage if the arc killer is applied to electronic circuits with low circuit voltages.
Varistor method	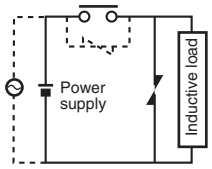	Yes	Yes	The varistor method prevents the imposition of high voltage between the contacts by using the constant voltage characteristic of the varistor. There is delay in the resetting time. If the supply voltage is 24 or 48 V, insert the varistor in parallel with the load. If the supply voltage is 100 to 200 V, insert the varistor between the contacts.	---

Precautions for Correct Use

Do not connect a capacitor as an arc killer in parallel with an inductive load as shown in the diagram on the right. This arc killer is very effective for preventing spark discharge at the moment when the circuit is opened. However, at the moment the contacts are closed, the contacts may be welded due to the current charged in the capacitor.

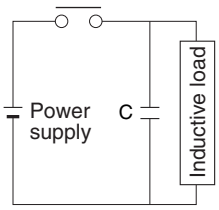

DC inductive loads can be more difficult to switch than resistive loads. If appropriate arc killers are used, however, DC inductive loads will be as easy to switch as resistive loads.

A-2-4 Connecting Connector-Terminal Block Conversion Units and I/O Relay Terminals

Patterns for Combining Connector-Terminal Block Conversion Units and I/O Relay Terminals

The following patterns can be used to connect Basic I/O Units with Connectors to OMRON Connector-Terminal Block Conversion Units and I/O Relay Terminals using OMRON Connecting Cables.

● Connection Patterns for Connector-Terminal Block Conversion Units

Pattern	Configuration	Number of connectors	Branching
A	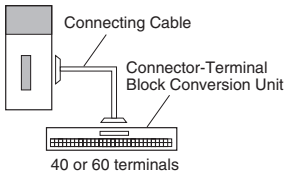	1	None
B	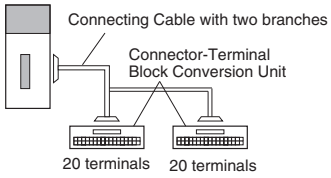		2 branches
C	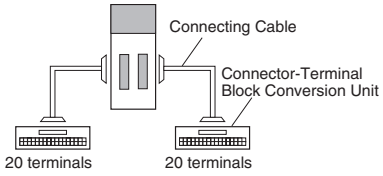	2	None
D	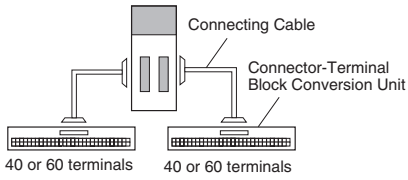		
F	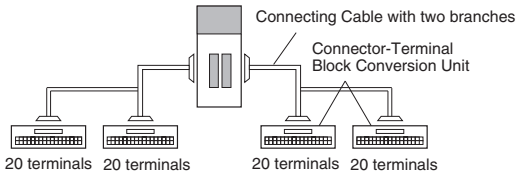		2 branches

● Connection Patterns for I/O Relay Terminals

Pattern	Configuration
A	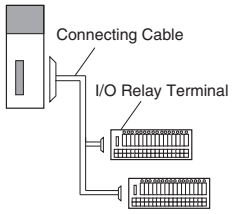
B	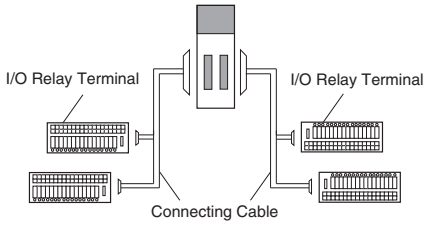
E	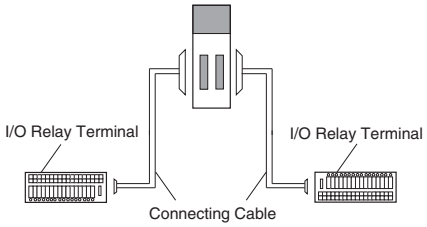
F	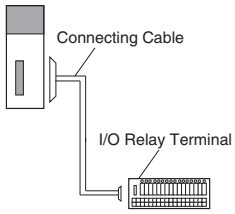

Combinations of Connections

Combinations of OMRON Connecting Cables with Connector-Terminal Block Conversion Units and I/O Relay Terminals are shown below.

● Connections to Connector-Terminal Block Conversion Units

Unit	I/O capacity	Number of connectors	Polarity	Connection pattern	Number of branches	Connecting Cable	Connector-Terminal Block Conversion Unit	Common terminal	Connection diagram
CJ1W-ID231	32 inputs	1 Fujitsu connector	NPN/PNP	A	None	XW2Z-□□□B	XW2D-40G6	None	A-65
				A	None	XW2Z-□□□B	XW2D-40G6-RF*2	None	
				A	None	XW2Z-□□□B	XW2B-40G5	None	---
				A	None	XW2Z-□□□B	XW2B-40G4	None	---
				A	None	XW2Z-□□□BU	XW2D-40C6	None	---
				B	2	XW2Z-□□□D	XW2D-20G6 (2 Units)	None	---
				B	2	XW2Z-□□□D	XW2B-20G5 (2 Units)	None	---
				B	2	XW2Z-□□□D	XW2B-20G4 (2 Units)	None	---
				B	2	XW2Z-□□□D	XW2C-20G6-IO16 (2 Units)	Yes	A-65
				B	2	XW2Z-□□□D	XW2C-20G5-IN16 (2 Units)*1	Yes	---
				B	2	XW2Z-□□□D	XW2E-20G5-IN16 (2 Units)*1	Yes	---
				B	2	XW2Z-□□□D	XW2F-20G7-IN16 (2 Units)*1	Yes	---
				B	2	XW2Z-□□□D	XW2N-20G8-IN16 (2 Units)*1	Yes	---
CJ1W-ID232	32 inputs	1 MIL connector	NPN/PNP	A	None	XW2Z-□□□K	XW2D-40G6	None	A-66
				A	None	XW2Z-□□□K	XW2D-40G6-RM*2	None	
				A	None	XW2Z-□□□K	XW2B-40G5	None	---
				A	None	XW2Z-□□□K	XW2B-40G4	None	---
				B	2	XW2Z-□□□N	XW2D-20G6 (2 Units)	None	---
				B	2	XW2Z-□□□N	XW2B-20G5 (2 Units)	None	---
				B	2	XW2Z-□□□N	XW2B-20G4 (2 Units)	None	---
				B	2	XW2Z-□□□N	XW2C-20G6-IO16 (2 Units)	Yes	A-66
				B	2	XW2Z-□□□N	XW2C-20G5-IN16 (2 Units)*1	Yes	---
				B	2	XW2Z-□□□N	XW2E-20G5-IN16 (2 Units)*1	Yes	---
				B	2	XW2Z-□□□N	XW2F-20G7-IN16 (2 Units)*1	Yes	---
				B	2	XW2Z-□□□N	XW2N-20G8-IN16 (2 Units)*1	Yes	---
CJ1W-ID233	32 inputs	1 MIL connector	NPN/PNP	A	None	XW2Z-□□□K	XW2D-40G6	None	A-67
				A	None	XW2Z-□□□K	XW2D-40G6-RM*2	None	
				A	None	XW2Z-□□□K	XW2B-40G5	None	---
				A	None	XW2Z-□□□K	XW2B-40G4	None	---
				B	2	XW2Z-□□□N	XW2D-20G6 (2 Units)	None	---
				B	2	XW2Z-□□□N	XW2B-20G5 (2 Units)	None	---
				B	2	XW2Z-□□□N	XW2B-20G4 (2 Units)	None	---
				B	2	XW2Z-□□□N	XW2C-20G6-IO16 (2 Units)	Yes	A-67
				B	2	XW2Z-□□□N	XW2C-20G5-IN16 (2 Units)*1	Yes	---
				B	2	XW2Z-□□□N	XW2E-20G5-IN16 (2 Units)*1	Yes	---
				B	2	XW2Z-□□□N	XW2F-20G7-IN16 (2 Units)*1	Yes	---
				B	2	XW2Z-□□□N	XW2N-20G8-IN16 (2 Units)*1	Yes	---

*1 The inputs are NPN. For PNP inputs, reverse the polarity of the external power supply connections to the power supply terminals on the Connector-Terminal Block Conversion Unit.

*2 Bleeder resistance (5.6 kΩ) is built in.

Unit	I/O capacity	Number of connectors	Polarity	Connection pattern	Number of branches	Connecting Cable	Connector-Terminal Block Conversion Unit	Common terminal	Connection diagram
CJ1W-ID261	64 inputs	2 Fujitsu connectors	NPN/PNP	D	None	XW2Z-□□□B	XW2D-40G6	None	A-68
				D	None	XW2Z-□□□B	XW2D-40G6-RF*2	None	
				D	None	XW2Z-□□□B	XW2B-40G5	None	---
				D	None	XW2Z-□□□B	XW2B-40G4	None	---
				D	None	XW2Z-□□□BU	XW2D-40C6	None	---
				F	2	XW2Z-□□□D	XW2D-40G6 (2 Units)	None	---
				F	2	XW2Z-□□□D	XW2B-20G5 (2 Units)	None	---
				F	2	XW2Z-□□□D	XW2B-20G4 (2 Units)	None	---
				F	2	XW2Z-□□□D	XW2C-20G6-IO16 (2 Units)	Yes	A-68
				F	2	XW2Z-□□□D	XW2C-20G5-IN16 (2 Units)*1	Yes	---
				F	2	XW2Z-□□□D	XW2E-20G5-IN16 (2 Units)*1	Yes	---
				F	2	XW2Z-□□□D	XW2F-20G7-IN16 (2 Units)*1	Yes	---
				F	2	XW2Z-□□□D	XW2N-20G8-IN16 (2 Units)*1	Yes	---
CJ1W-ID262	64 inputs	2 MIL connectors	NPN/PNP	D	None	XW2Z-□□□K	XW2D-40G6	None	A-69
				D	None	XW2Z-□□□K	XW2D-40G6-RM*2	None	
				D	None	XW2Z-□□□K	XW2B-40G5	None	---
				D	None	XW2Z-□□□K	XW2B-40G4	None	---
				F	2	XW2Z-□□□N	XW2D-20G6 (2 Units)	None	---
				F	2	XW2Z-□□□N	XW2B-20G5 (2 Units)	None	---
				F	2	XW2Z-□□□N	XW2B-20G4 (2 Units)	None	---
				F	2	XW2Z-□□□N	XW2C-20G6-IO16 (2 Units)	Yes	A-69
				F	2	XW2Z-□□□N	XW2C-20G5-IN16 (2 Units)*1	Yes	---
				F	2	XW2Z-□□□N	XW2E-20G5-IN16 (2 Units)*1	Yes	---
				F	2	XW2Z-□□□N	XW2F-20G7-IN16 (2 Units)*1	Yes	---
				F	2	XW2Z-□□□N	XW2N-20G8-IN16 (2 Units)*1	Yes	---
CJ1W-OD231	32 outputs	1 Fujitsu connector	NPN	A	None	XW2Z-□□□B	XW2D-40G6	None	A-70
				A	None	XW2Z-□□□B	XW2B-40G5	None	---
				A	None	XW2Z-□□□B	XW2B-40G4	None	---
				A	None	XW2Z-□□□BU	XW2D-40C6	None	A-70
				B	2	XW2Z-□□□L	XW2D-20G6 (2 Units)	None	---
				B	2	XW2Z-□□□L	XW2B-20G5 (2 Units)	None	---
				B	2	XW2Z-□□□L	XW2B-20G4 (2 Units)	None	---
				B	2	XW2Z-□□□L	XW2C-20G6-IO16 (2 Units)	Yes	A-70
				B	2	XW2Z-□□□L	XW2F-20G7-OUT16 (2 Units)	Yes	---
CJ1W-OD232	32 outputs	1 MIL connector	PNP	A	None	XW2Z-□□□K	XW2D-40G6	None	A-71
				A	None	XW2Z-□□□K	XW2B-40G5	None	---
				A	None	XW2Z-□□□K	XW2B-40G4	None	---
				B	2	XW2Z-□□□N	XW2D-20G6 (2 Units)	None	---
				B	2	XW2Z-□□□N	XW2B-20G5 (2 Units)	None	---
				B	2	XW2Z-□□□N	XW2B-20G4 (2 Units)	None	---
				B	2	XW2Z-□□□N	XW2C-20G6-IO16 (2 Units)	Yes	A-71
				B	2	XW2Z-□□□N	XW2F-20G7-OUT16 (2 Units)	Yes	---

*1 The inputs are NPN. For PNP inputs, reverse the polarity of the external power supply connections to the power supply terminals on the Connector-Terminal Block Conversion Unit.

*2 Bleeder resistance (5.6 kΩ) is built in.

Unit	I/O capacity	Number of connectors	Polarity	Connection pattern	Number of branches	Connecting Cable	Connector-Terminal Block Conversion Unit	Common terminal	Connection diagram
CJ1W-OD233	32 outputs	1 MIL connector	NPN	A	None	XW2Z-□□□K	XW2D-40G6	None	A-72
				A	None	XW2Z-□□□K	XW2B-40G5	None	---
				A	None	XW2Z-□□□K	XW2B-40G4	None	---
				B	2	XW2Z-□□□N	XW2D-20G6 (2 Units)	None	---
				B	2	XW2Z-□□□N	XW2B-20G5 (2 Units)	None	---
				B	2	XW2Z-□□□N	XW2B-20G4 (2 Units)	None	---
				B	2	XW2Z-□□□N	XW2C-20G6-IO16 (2 Units)	Yes	A-72
				B	2	XW2Z-□□□N	XW2F-20G7-OUT16 (2 Units)	Yes	---
CJ1W-OD234	32 outputs	1 MIL connector	NPN	A	None	XW2Z-□□□K	XW2D-40G6	None	A-73
				A	None	XW2Z-□□□K	XW2B-40G5	None	---
				A	None	XW2Z-□□□K	XW2B-40G4	None	---
				B	2	XW2Z-□□□N	XW2D-20G6 (2 Units)	None	---
				B	2	XW2Z-□□□N	XW2B-20G5 (2 Units)	None	---
				B	2	XW2Z-□□□N	XW2B-20G4 (2 Units)	None	---
				B	2	XW2Z-□□□N	XW2C-20G6-IO16 (2 Units)	Yes	A-73
				B	2	XW2Z-□□□N	XW2F-20G7-OUT16 (2 Units)	Yes	---
CJ1W-OD261	64 outputs	2 Fujitsu connectors	NPN	D	None	XW2Z-□□□B	XW2D-40G6	None	A-74
				D	None	XW2Z-□□□B	XW2B-40G5	None	---
				D	None	XW2Z-□□□B	XW2B-40G4	None	---
				D	None	XW2Z-□□□BU	XW2D-40C6	None	A-74
				F	2	XW2Z-□□□L	XW2D-20G6 (2 Units)	None	---
				F	2	XW2Z-□□□L	XW2B-20G5 (2 Units)	None	---
				F	2	XW2Z-□□□L	XW2B-20G4 (2 Units)	None	---
				F	2	XW2Z-□□□L	XW2C-20G6-IO16 (2 Units)	Yes	A-74
				F	2	XW2Z-□□□L	XW2F-20G7-OUT16 (2 Units)	Yes	---
CJ1W-OD262	64 outputs	2 MIL connectors	PNP	D	None	XW2Z-□□□K	XW2D-40G6	None	A-75
				D	None	XW2Z-□□□K	XW2B-40G5	None	---
				D	None	XW2Z-□□□K	XW2B-40G4	None	---
				F	2	XW2Z-□□□N	XW2D-20G6 (2 Units)	None	---
				F	2	XW2Z-□□□N	XW2B-20G5 (2 Units)	None	---
				F	2	XW2Z-□□□N	XW2B-20G4 (2 Units)	None	---
				F	2	XW2Z-□□□N	XW2C-20G6-IO16 (2 Units)	Yes	A-75
				F	2	XW2Z-□□□N	XW2F-20G7-OUT16 (2 Units)	Yes	---
CJ1W-OD263	64 outputs	2 MIL connectors	NPN	D	None	XW2Z-□□□K	XW2D-40G6	None	A-76
				D	None	XW2Z-□□□K	XW2B-40G5	None	---
				D	None	XW2Z-□□□K	XW2B-40G4	None	---
				F	2	XW2Z-□□□N	XW2D-20G6 (2 Units)	None	---
				F	2	XW2Z-□□□N	XW2B-20G5 (2 Units)	None	---
				F	2	XW2Z-□□□N	XW2B-20G4 (2 Units)	None	---
				F	2	XW2Z-□□□N	XW2C-20G6-IO16 (2 Units)	Yes	A-76
				F	2	XW2Z-□□□N	XW2F-20G7-OUT16 (2 Units)	Yes	---

Unit	I/O capacity	Number of connectors	Polarity	Connection pattern	Number of branches	Connecting Cable	Connector-Terminal Block Conversion Unit	Common terminal	Connection diagram
CJ1W-MD231	16 inputs	1 Fujitsu connector	NPN/PNP	C	None	XW2Z-□□□A	XW2D-20G6	None	A-77
				C	None	XW2Z-□□□A	XW2B-20G5	None	---
				C	None	XW2Z-□□□A	XW2B-20G4	None	---
				C	None	XW2Z-□□□A	XW2C-20G6-IO16	Yes	A-78
				C	None	XW2Z-□□□A	XW2C-20G5-IN16*1	Yes	---
				C	None	XW2Z-□□□A	XW2E-20G5-IN16*1	Yes	---
				C	None	XW2Z-□□□A	XW2F-20G7-IN16*1	Yes	---
				C	None	XW2Z-□□□A	XW2N-20G8-IN16*1	Yes	---
	16 outputs	1 Fujitsu connector	NPN	C	None	XW2Z-□□□A	XW2D-20G6	None	A-77
				C	None	XW2Z-□□□A	XW2B-20G5	None	---
				C	None	XW2Z-□□□A	XW2B-20G4	None	---
				C	None	XW2Z-□□□A	XW2C-20G6-IO16	Yes	A-78
				C	None	XW2Z-□□□A	XW2F-20G7-OUT16	Yes	---
CJ1W-MD232	16 inputs	1 MIL connector	NPN/PNP	C	None	XW2Z-□□□X	XW2D-20G6	None	A-79
				C	None	XW2Z-□□□X	XW2B-20G5	None	---
				C	None	XW2Z-□□□X	XW2B-20G4	None	---
	16 outputs	1 MIL connector	PNP	C	None	XW2Z-□□□X	XW2D-20G6	None	A-79
				C	None	XW2Z-□□□X	XW2B-20G5	None	---
				C	None	XW2Z-□□□X	XW2B-20G4	None	---
CJ1W-MD233	16 inputs	1 MIL connector	NPN/PNP	C	None	XW2Z-□□□X	XW2D-20G6	None	A-79
				C	None	XW2Z-□□□X	XW2B-20G5	None	---
				C	None	XW2Z-□□□X	XW2B-20G4	None	---
	16 outputs	1 MIL connector	NPN	C	None	XW2Z-□□□X	XW2D-20G6	None	A-79
				C	None	XW2Z-□□□X	XW2B-20G5	None	---
				C	None	XW2Z-□□□X	XW2B-20G4	None	---
CJ1W-MD261	32 outputs	1 Fujitsu connector	NPN/PNP	D	None	XW2Z-□□□B	XW2D-40G6	None	A-80
				D	None	XW2Z-□□□B	XW2D-40G6-RF*2	None	
				D	None	XW2Z-□□□B	XW2B-40G5	None	---
				D	None	XW2Z-□□□B	XW2B-40G4	None	---
				D	None	XW2Z-□□□BU	XW2D-40C6	None	---
				F	2	XW2Z-□□□D	XW2D-20G6 (2 Units)	None	---
				F	2	XW2Z-□□□D	XW2B-20G5 (2 Units)	None	---
				F	2	XW2Z-□□□D	XW2B-20G4 (2 Units)	None	---
				F	2	XW2Z-□□□D	XW2C-20G6-IO16 (2 Units)	Yes	A-81
				F	2	XW2Z-□□□D	XW2C-20G5-IN16 (2 Units)*1	Yes	---
				F	2	XW2Z-□□□D	XW2E-20G5-IN16 (2 Units)*1	Yes	---
				F	2	XW2Z-□□□D	XW2F-20G7-IN16 (2 Units)*1	Yes	---
				F	2	XW2Z-□□□D	XW2N-20G8-IN16 (2 Units)*1	Yes	---
	32 outputs	1 Fujitsu connector	NPN	D	None	XW2Z-□□□B	XW2D-40G6	None	A-80
				D	None	XW2Z-□□□B	XW2B-40G5	None	---
				D	None	XW2Z-□□□B	XW2B-40G4	None	---
				D	None	XW2Z-□□□BU	XW2D-40C6	None	---
				F	2	XW2Z-□□□L	XW2D-20G6 (2 Units)	None	---
				F	2	XW2Z-□□□L	XW2B-20G5 (2 Units)	None	---
				F	2	XW2Z-□□□L	XW2B-20G4 (2 Units)	None	---
				F	2	XW2Z-□□□L	XW2C-20G6-IO16 (2 Units)	Yes	A-81
				F	2	XW2Z-□□□L	XW2F-20G7-OUT16 (2 Units)	Yes	---

*1 The inputs are NPN. For PNP inputs, reverse the polarity of the external power supply connections to the power supply terminals on the Connector-Terminal Block Conversion Unit.

*2 Bleeder resistance (5.6 kΩ) is built in.

Unit	I/O capacity	Number of connectors	Polarity	Connection pattern	Number of branches	Connecting Cable	Connector-Terminal Block Conversion Unit	Common terminal	Connection diagram
CJ1W-MD263	32 inputs	1 MIL connector	NPN/PNP	D	None	XW2Z-□□□K	XW2D-40G6	None	A-82
				D	None	XW2Z-□□□K	XW2D-40G6-RM*2	None	
				D	None	XW2Z-□□□K	XW2B-40G5	None	---
				D	None	XW2Z-□□□K	XW2B-40G4	None	---
				F	2	XW2Z-□□□N	XW2D-20G6 (2 Units)	None	---
				F	2	XW2Z-□□□N	XW2B-20G5 (2 Units)	None	---
				F	2	XW2Z-□□□N	XW2B-20G4 (2 Units)	None	---
				F	2	XW2Z-□□□N	XW2C-20G6-IO16 (2 Units)	None	A-83
				F	2	XW2Z-□□□N	XW2C-20G5-IN16 (2 Units)*1	Yes	---
				F	2	XW2Z-□□□N	XW2E-20G5-IN16 (2 Units)*1	Yes	---
				F	2	XW2Z-□□□N	XW2F-20G7-IN16 (2 Units)*1	Yes	---
				F	2	XW2Z-□□□N	XW2N-20G8-IN16 (2 Units)*1	Yes	---
	32 outputs	1 MIL connector	NPN	D	None	XW2Z-□□□K	XW2D-40G6	None	A-82
				D	None	XW2Z-□□□K	XW2B-40G5	None	---
				D	None	XW2Z-□□□K	XW2B-40G4	None	---
				F	2	XW2Z-□□□L	XW2D-20G6 (2 Units)	None	---
				F	2	XW2Z-□□□L	XW2B-20G5 (2 Units)	None	---
				F	2	XW2Z-□□□L	XW2B-20G4 (2 Units)	None	---
				F	2	XW2Z-□□□L	XW2C-20G6-IO16 (2 Units)	Yes	A-83
				F	2	XW2Z-□□□L	XW2F-20G7-OUT16 (2 Units)	Yes	---
CJ1W-MD563	32 inputs	1 MIL connector	NPN/PNP	D	None	XW2Z-□□□K	XW2D-40G6	None	A-84
				D	None	XW2Z-□□□K	XW2D-40G6-RM*2	None	
				D	None	XW2Z-□□□K	XW2B-40G5	None	---
				D	None	XW2Z-□□□K	XW2B-40G4	None	---
				F	2	XW2Z-□□□N	XW2D-20G6 (2 Units)	None	---
				F	2	XW2Z-□□□N	XW2B-20G5 (2 Units)	None	---
				F	2	XW2Z-□□□N	XW2B-20G4 (2 Units)	None	---
	32 outputs	1 MIL connector	NPN	D	None	XW2Z-□□□K	XW2D-40G6	None	A-84
				D	None	XW2Z-□□□K	XW2B-40G5	None	---
				D	None	XW2Z-□□□K	XW2B-40G4	None	---
				F	2	XW2Z-□□□N	XW2D-20G6 (2 Units)	None	---
				F	2	XW2Z-□□□N	XW2B-20G5 (2 Units)	None	---
				F	2	XW2Z-□□□N	XW2B-20G4 (2 Units)	None	---

*1 The inputs are NPN. For PNP inputs, reverse the polarity of the external power supply connections to the power supply terminals on the Connector-Terminal Block Conversion Unit.

*2 Bleeder resistance (5.6 kΩ) is built in.

● Connections to I/O Relay Terminals

Unit	I/O capacity	Number of connectors	Polarity	Connection pattern	Number of branches	Connecting Cable	I/O Relay Terminal	Connection diagram
CJ1W-ID231	32 inputs	1 Fujitsu connector	NPN	A	2	G79-I□C-□	G7TC-ID16	A-85
				A	2	G79-I□C-□	G7TC-IA16	
CJ1W-ID232	32 inputs	1 MIL connector	NPN	A	2	G79-O□-□-D1	G7TC-ID16	
				A	2	G79-O□-□-D1	G7TC-IA16	
CJ1W-ID233	32 inputs	1 MIL connector	NPN	A	2	G79-O□-□-D1	G7TC-ID16	
				A	2	G79-O□-□-D1	G7TC-IA16	
CJ1W-ID261	64 inputs	2 Fujitsu connectors	NPN	B	2	G79-I□C-□	G7TC-ID16	
				B	2	G79-I□C-□	G7TC-IA16	
CJ1W-ID262	64 inputs	2 MIL connectors	NPN	B	2	G79-O□-□-D1	G7TC-ID16	
				B	2	G79-O□-□-D1	G7TC-IA16	
CJ1W-OD231	32 outputs	1 Fujitsu connector	NPN	A	2	G79-O□C-□	G7TC-OC16	A-88
				A	2	G79-O□C-□	G7TC-OC08	
				A	2	G79-O□C-□	G70D-SOC16	A-87
				A	2	G79-O□C-□	G70D-FOM16	---
				A	2	G79-O□C-□	G70D-VSOC16	A-86
				A	2	G79-O□C-□	G70D-VFOM16	---
				A	2	G79-O□C-□	G70A-ZOC16-3 and Relay	A-89
				A	2	G79-O□C-□	G70R-SOC08	A-88
				A	2	G79-O□C-□	G70D-SOC08	A-87
CJ1W-OD232	32 outputs	1 MIL connector	PNP	A	2	G79-I□-□-D1	G7TC-OC16-1	A-89
				A	2	G79-O□-□-D1	G70D-SOC16-1	---
				A	2	G79-O□-□-D1	G70D-FOM16-1	---
				A	2	G79-O□-□-D1	G70A-ZOC16-4 and Relay	---
CJ1W-OD233	32 outputs	1 MIL connector	NPN	A	2	G79-O□-□-D1	G7TC-OC16	A-88
				A	2	G79-O□-□-D1	G7TC-OC08	
				A	2	G79-O□-□-D1	G70D-SOC16	A-87
				A	2	G79-O□-□-D1	G70D-FOM16	---
				A	2	G79-O□-□-D1	G70D-VSOC16	A-86
				A	2	G79-O□-□-D1	G70D-VFOM16	---
				A	2	G79-O□-□-D1	G70A-ZOC16-3 and Relay	A-89
				A	2	G79-O□-□-D1	G70R-SOC08	A-88
				A	2	G79-O□-□-D1	G70D-SOC08	A-87
CJ1W-OD234	32 outputs	1 MIL connector	NPN	A	2	G79-O□-□-D1	G7TC-OC16	A-88
				A	2	G79-O□-□-D1	G7TC-OC08	
				A	2	G79-O□-□-D1	G70D-SOC16	A-87
				A	2	G79-O□-□-D1	G70D-FOM16	---
				A	2	G79-O□-□-D1	G70D-VSOC16	A-86
				A	2	G79-O□-□-D1	G70D-VFOM16	---
				A	2	G79-O□-□-D1	G70A-ZOC16-3 and Relay	A-89
				A	2	G79-O□-□-D1	G70R-SOC08	A-88
				A	2	G79-O□-□-D1	G70D-SOC08	A-87

Unit	I/O capacity	Number of connectors	Polarity	Connection pattern	Number of branches	Connecting Cable	I/O Relay Terminal	Connection diagram
CJ1W-OD261	64 outputs	2 Fujitsu connectors	NPN	B	2	G79-O□C-□	G7TC-OC16	A-88
				B	2	G79-O□C-□	G7TC-OC08	
				B	2	G79-O□C-□	G70D-SOC16	A-87
				B	2	G79-O□C-□	G70D-FOM16	---
				B	2	G79-O□C-□	G70D-VSOC16	A-86
				B	2	G79-O□C-□	G70D-VFOM16	---
				B	2	G79-O□C-□	G70A-ZOC16-3 and Relay	A-89
				B	2	G79-O□C-□	G70R-SOC08	A-88
				B	2	G79-O□C-□	G70D-SOC08	A-87
CJ1W-OD262	64 outputs	2 MIL connectors	PNP	B	2	G79-I□-□-D1	G7TC-OC16-1	A-89
				B	2	G79-O□-□-D1	G70D-SOC16-1	---
				B	2	G79-O□-□-D1	G70D-FOM16-1	---
				B	2	G79-O□-□-D1	G70A-ZOC16-4 and Relay	---
CJ1W-OD263	64 outputs	2 MIL connectors	NPN	B	2	G79-O□-□-D1	G7TC-OC16	A-88
				B	2	G79-O□-□-D1	G7TC-OC08	
				B	2	G79-O□-□-D1	G70D-SOC16	A-87
				B	2	G79-O□-□-D1	G70D-FOM16	---
				B	2	G79-O□-□-D1	G70D-VSOC16	A-86
				B	2	G79-O□-□-D1	G70D-VFOM16	---
				B	2	G79-O□-□-D1	G70A-ZOC16-3 and Relay	A-89
				B	2	G79-O□-□-D1	G70R-SOC08	A-88
				B	2	G79-O□-□-D1	G70D-SOC08	A-87
CJ1W-MD231	16 inputs	1 Fujitsu connector	NPN	F	None	G79-□C	G7TC-ID16	A-85
				F	None	G79-□C	G7TC-IA16	
	16 outputs	1 Fujitsu connector	NPN	F	None	G79-□C	G7TC-OC16	A-88
				F	None	G79-□C	G7TC-OC08	
				F	None	G79-□C	G70D-SOC16	A-87
				F	None	G79-□C	G70D-FOM16	---
				F	None	G79-□C	G70D-VSOC16	A-86
				F	None	G79-□C	G70D-VFOM16	---
				F	None	G79-□C	G70A-ZOC16-3 and Relay	A-89
				F	None	G79-□C	G70R-SOC08	A-88
				F	None	G79-□C	G70D-SOC08	A-87
CJ1W-MD232	16 outputs	1 MIL connector	PNP	F	None	G79-O□C	G7TC-OC16-1	A-89
				F	None	G79-I□C	G70D-SOC16-1	---
				F	None	G79-I□C	G70D-FOM16-1	---
				F	None	G79-I□C	G70A-ZOC16-4 and Relay	---
CJ1W-MD233	16 inputs	1 MIL connector	NPN	E	None	G79-O□C	G7TC-ID16	A-85
				E	None	G79-O□C	G7TC-IA16	
	16 outputs	1 MIL connector	NPN	E	None	G79-O□C	G7TC-OC16	A-88
				E	None	G79-O□C	G7TC-OC08	
				E	None	G79-O□C	G70D-SOC16	A-87
				E	None	G79-O□C	G70D-FOM16	---
				E	None	G79-O□C	G70D-VSOC16	A-86
				E	None	G79-O□C	G70D-VFOM16	---
				E	None	G79-O□C	G70A-ZOC16-3 and Relay	A-89
				E	None	G79-O□C	G70R-SOC08	A-88
				E	None	G79-O□C	G70D-SOC08	A-87

Unit	I/O capacity	Number of connectors	Polarity	Connection pattern	Number of branches	Connecting Cable	I/O Relay Terminal	Connection diagram
CJ1W-MD261	32 inputs	1 Fujitsu connector	NPN	B	2	G79-I□C-□	G7TC-ID16	A-85
				B	2	G79-I□C-□	G7TC-IA16	
	32 outputs	1 Fujitsu connector	NPN	B	2	G79-O□C-□	G7TC-OC16	A-88
				B	2	G79O□C-□	G7TC-OC08	
				B	2	G79-O□C-□	G70D-SOC16	A-87
				B	2	G79-O□C-□	G70D-FOM16	---
				B	2	G79-O□C-□	G70D-VSOC16	A-86
				B	2	G79-O□C-□	G70D-VFOM16	---
				B	2	G79O□C-□	G70A-ZOC16-3 and Relay	A-89
				B	2	G79-O□C-□	G70R-SOC08	A-88
				B	2	G79-O□C-□	G70D-SOC08	A-87
CJ1W-MD263	32 inputs	1 MIL connector	NPN	B	2	G79-O□-□-D1	G7TC-ID16	A-85
				B	2	G79-O□-□-D1	G7TC-IA16	
	32 outputs	1 MIL connector	NPN	B	2	G79-O□-□-D1	G7TC-OC16	A-88
				B	2	G79-O□-□-D1	G7TC-OC08	
				B	2	G79-O□-□-D1	G70D-SOC16	A-87
				B	2	G79-O□-□-D1	G70D-FOM16	---
				B	2	G79-O□-□-D1	G70D-VSOC16	A-86
				B	2	G79-O□-□-D1	G70D-VFOM16	---
				B	2	G79-O□-□-D1	G70A-ZOC16-3 and Relay	A-89
				B	2	G79-O□-□-D1	G70R-SOC08	A-88
				B	2	G79-O□-□-D1	G70D-SOC08	A-87

Connector-Terminal Block Conversion Unit Connection Diagrams

The applicable terminals on the Connector-Terminal Block Conversion Unit and external connection diagrams are provided below for Basic I/O Unit connections to Connector-Terminal Block Conversion Units.

● Inputs

Programmable Controller I/O Unit	CJ1W-ID231
Connector-Terminal Block Conversion Unit	XW2D-40G6 XW2D-40G6-RF
Connecting Cables	XW2Z-□□□B
Connection diagram	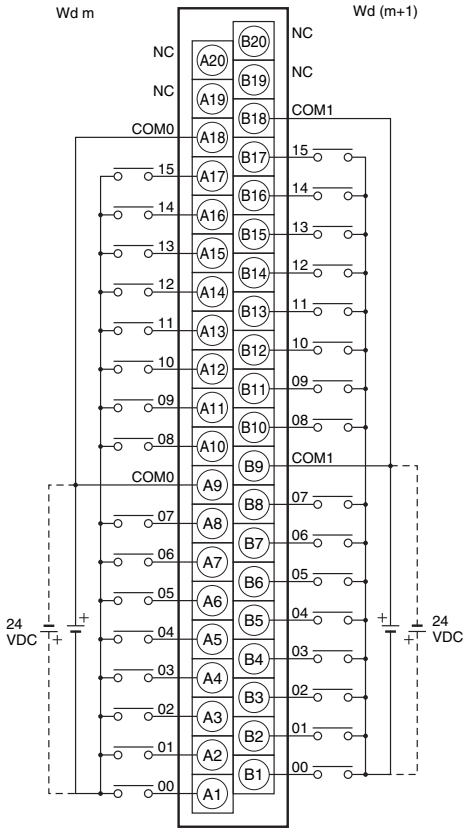

Note 1 The polarity for input power supply connections indicated with dotted lines (- - - - -) can be connected in either direction provided that the same polarity is used for the commons for rows A and B.

2 Both COM0 and COM1 have two pins each. They are internally connected inside the Controller, but they must all be wired.

Programmable Controller I/O Unit	CJ1W-ID231
Connector-Terminal Block Conversion Unit	XW2C-20G6-IO16 (two Units)
Connecting Cables	XW2Z-□□□D
Connection diagram	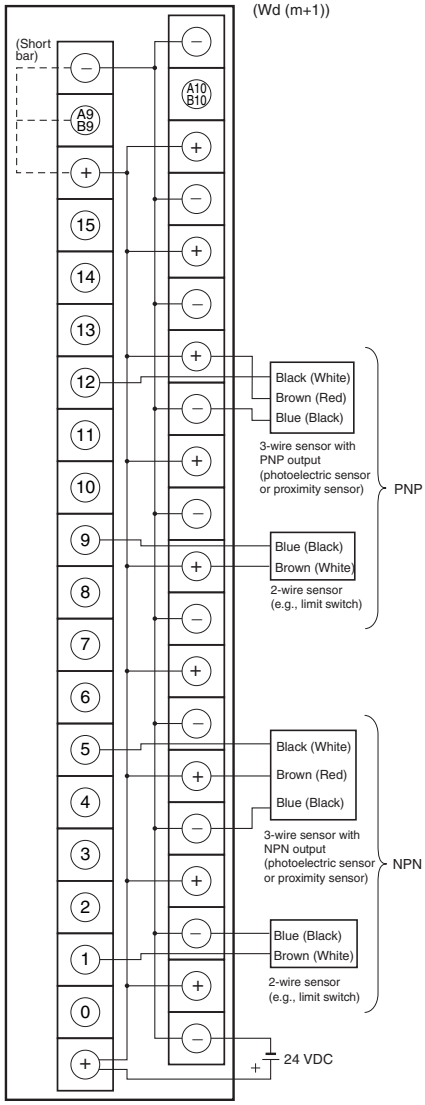

Note 1 Connect the A9/B9 terminal and the ⊕ terminal for NPN.
Connect the A9/B9 terminal and the ⊖ terminal for PNP.
(Use the enclosed short bar.)

2 The COM terminals are wired inside the Connector-Terminal Block Conversion Unit.

Programmable Controller I/O Unit	CJ1W-ID232
Connector-Terminal Block Conversion Unit	XW2D-40G6 XW2D-40G6-RM
Connecting Cables	XW2Z-□□□K
Connection diagram	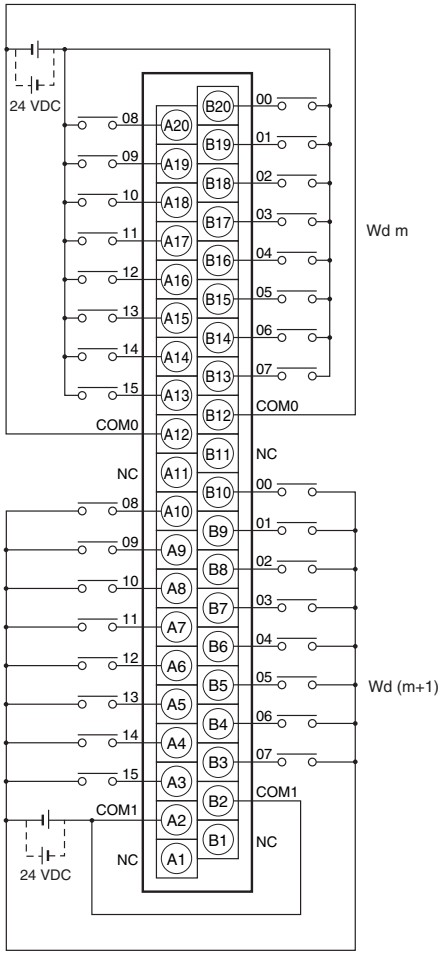

Note 1 The polarity for input power supply connections indicated with dotted lines (- - - - -) can be connected in either direction provided that the same polarity is used for the commons.

2 Both COM0 and COM1 have two pins each. They are internally connected inside the Controller, but they must all be wired.

Programmable Controller I/O Unit	CJ1W-ID232
Connector-Terminal Block Conversion Unit	XW2C-20G6-IO16 (2 Units)
Connecting Cables	XW2Z-□□□N
Connection diagram	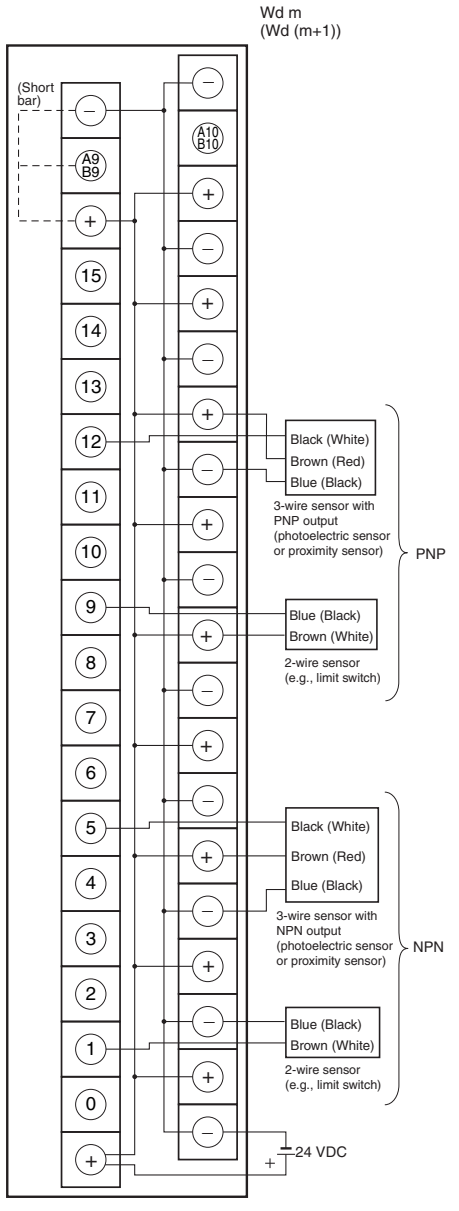

Note 1 Connect the A9/B9 terminal and the ⊕ terminal for NPN.
Connect the A9/B9 terminal and the ⊖ terminal for PNP.
(Use the enclosed short bar.)

2 The COM terminals are wired inside the Connector-Terminal Block Conversion Unit.

Programmable Controller I/O Unit	CJ1W-ID233
Connector-Terminal Block Conversion Unit	XW2D-40G6 XW2D-40G6-RM
Connecting Cables	XW2Z-□□□K
Connection diagram	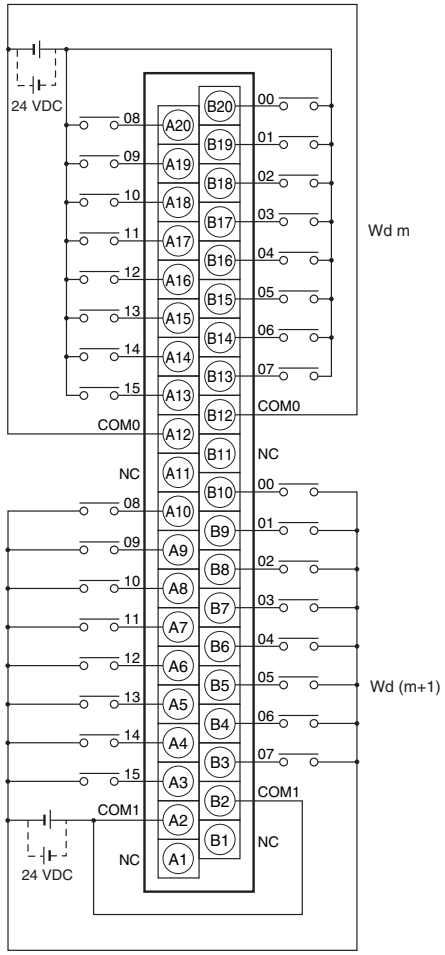

Note 1 The polarity for input power supply connections indicated with dotted lines (- - - - -) can be connected in either direction provided that the same polarity is used for the commons.

2 Both COM0 and COM1 have two pins each. They are internally connected inside the Controller, but they must all be wired.

Programmable Controller I/O Unit	CJ1W-ID233
Connector-Terminal Block Conversion Unit	XW2C-20G6-IO16 (2 Units)
Connecting Cables	XW2Z-□□□N
Connection diagram	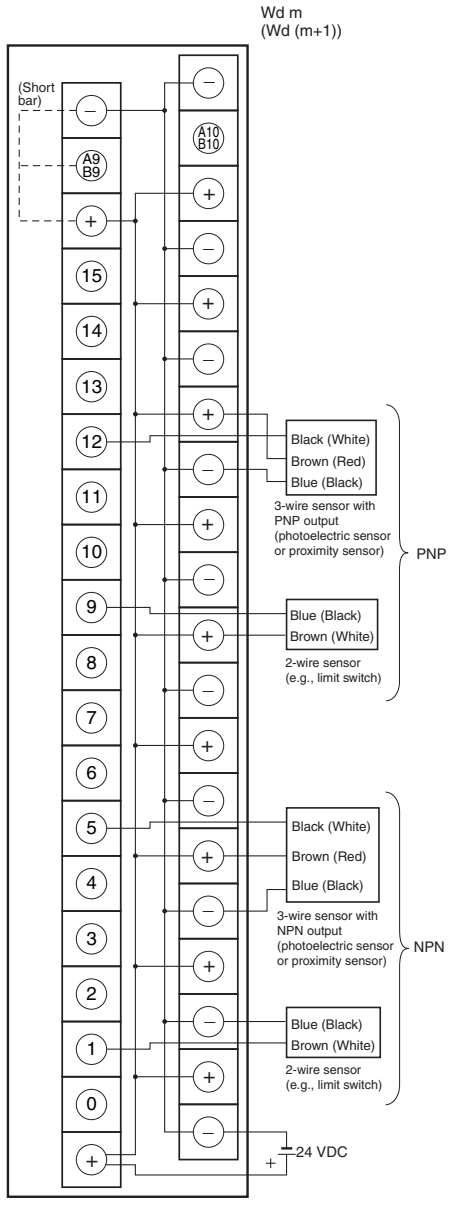

Note 1 Connect the A9/B9 terminal and the ⊕ terminal for NPN.
Connect the A9/B9 terminal and the ⊖ terminal for PNP.
(Use the enclosed short bar.)

2 The COM terminals are wired inside the Connector-Terminal Block Conversion Unit.

Programmable Controller I/O Unit	CJ1W-ID261
Connector-Terminal Block Conversion Unit	XW2D-40G6 XW2D-40G6-RF
Connecting Cables	XW2Z-□□□B
Connection diagram	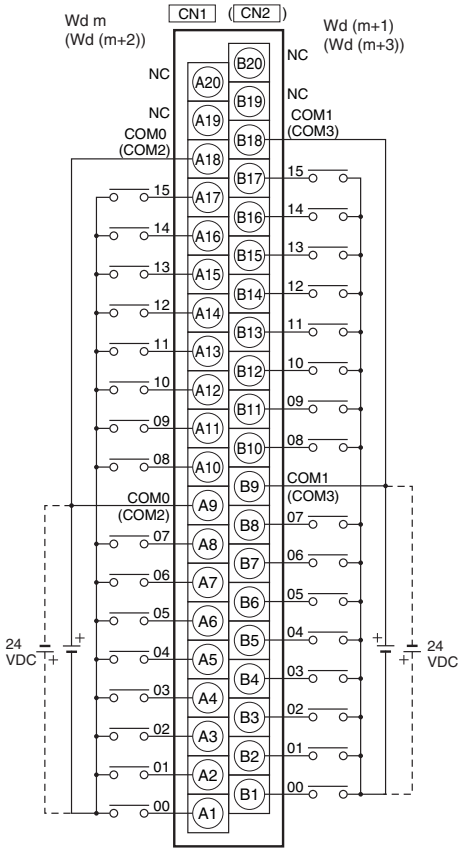

Note 1 The polarity for input power supply connections indicated with dotted lines (- - - - -) can be connected in either direction provided that the same polarity is used for the commons for rows A and B.

2 COM0, COM1, COM2, and COM3 have two pins each. They are internally connected inside the Controller, but they must all be wired.

Programmable Controller I/O Unit	CJ1W-ID261
Connector-Terminal Block Conversion Unit	XW2C-20G6-IO16 (2 Units)
Connecting Cables	XW2Z-□□□D
Connection diagram	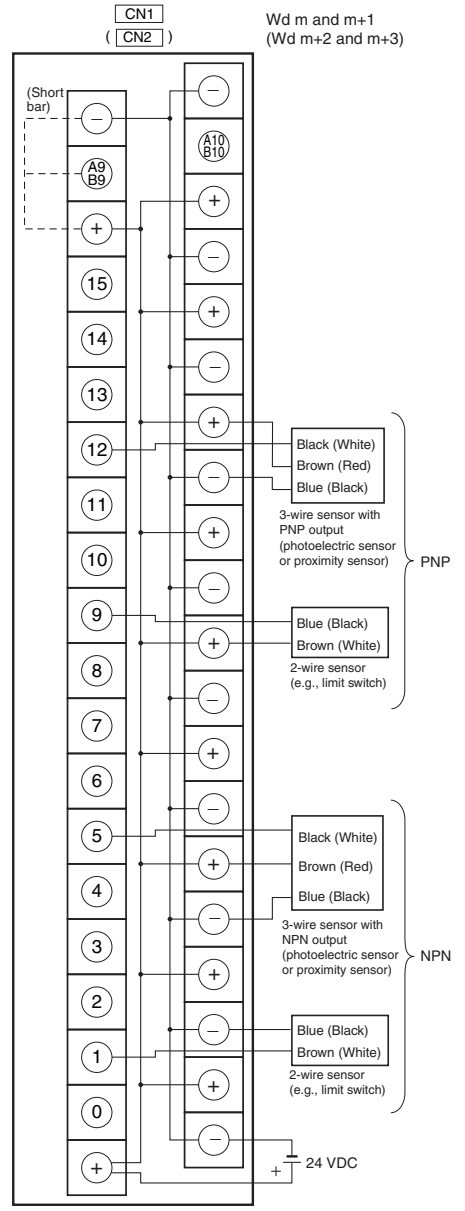

Note 1 Connect the A9/B9 terminal and the ⊕ terminal for NPN.
Connect the A9/B9 terminal and the ⊖ terminal for PNP.
(Use the enclosed short bar.)

2 The COM terminals are wired inside the Connector-Terminal Block Conversion Unit.

Programmable Controller I/O Unit	CJ1W-ID262
Connector-Terminal Block Conversion Unit	XW2D-40G6 XW2D-40G6-RM
Connecting Cables	XW2Z-□□□K
Connection diagram	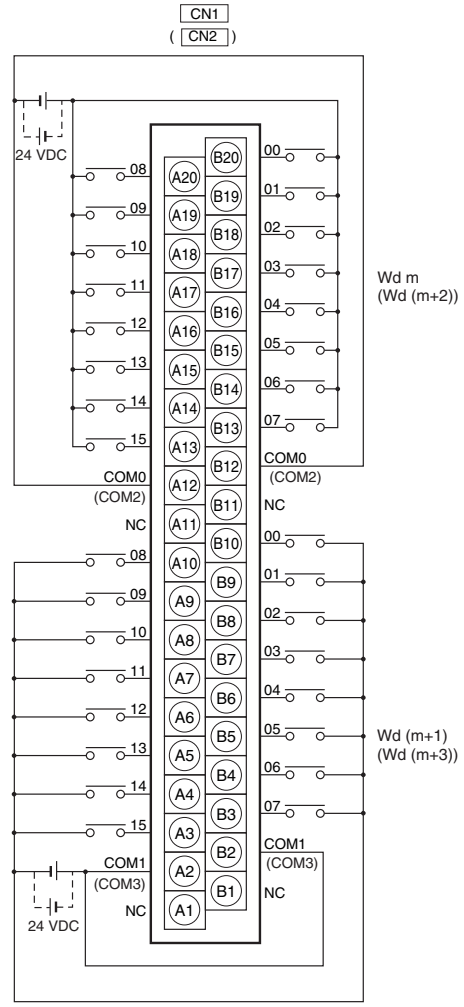

Note 1 The polarity for input power supply connections indicated with dotted lines (- - - - -) can be connected in either direction provided that the same polarity is used for the commons.

2 COM0, COM1, COM2, and COM3 have two pins each. They are internally connected inside the Controller, but they must all be wired.

Programmable Controller I/O Unit	CJ1W-ID262
Connector-Terminal Block Conversion Unit	XW2C-20G6-IO16 (2 Units)
Connecting Cables	XW2Z-□□□N
Connection diagram	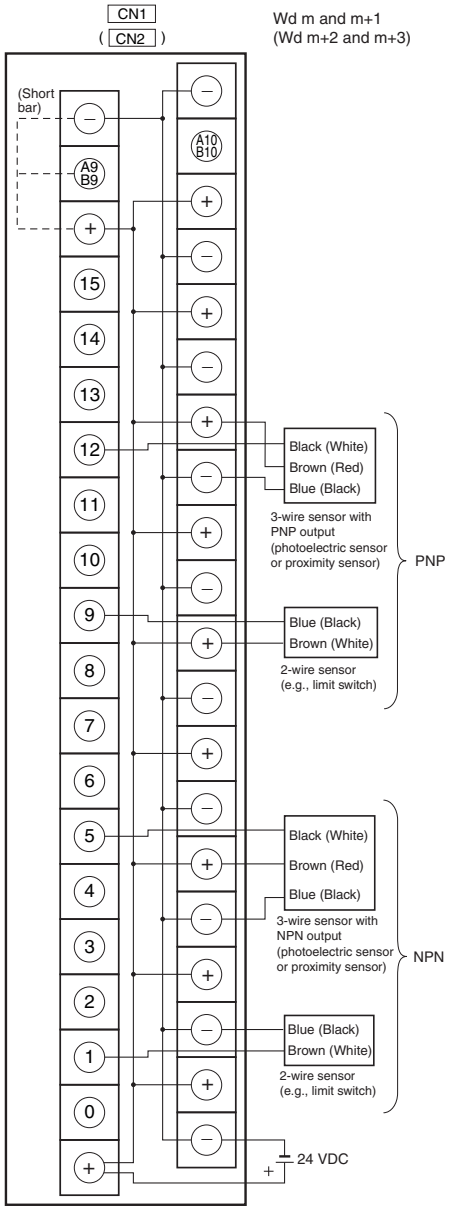

Note 1 Connect the A9/B9 terminal and the ⊕ terminal for NPN.
Connect the A9/B9 terminal and the ⊖ terminal for PNP.
(Use the enclosed short bar.)

2 The COM terminals are wired inside the Connector-Terminal Block Conversion Unit.

● Outputs

Programmable Controller I/O Unit	CJ1W-OD231
Connector-Terminal Block Conversion Unit	XW2D-40G6 XW2D-40C6
Connecting Cables	XW2Z-□□□B XW2Z-□□□BU
Connection diagram	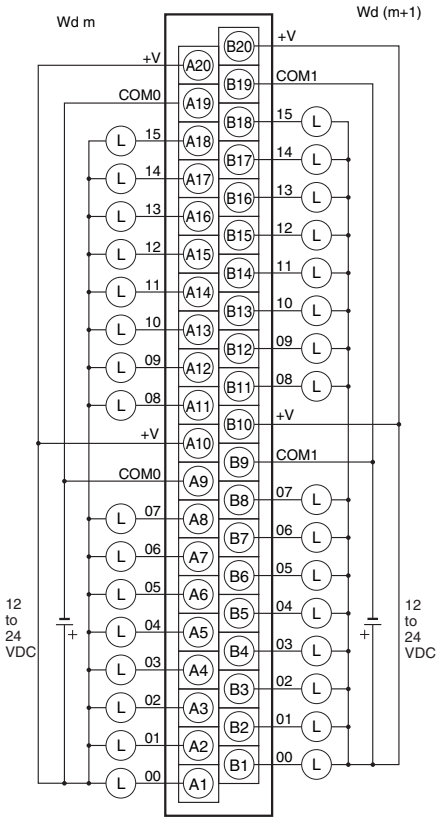

Note The +V terminals and COM terminals are internally connected inside the Controller, but they must all be wired.

Programmable Controller I/O Unit	CJ1W-OD231
Connector-Terminal Block Conversion Unit	XW2C-20G6-IO16 (2 Units)
Connecting Cables	XW2Z-□□□L
Connection diagram	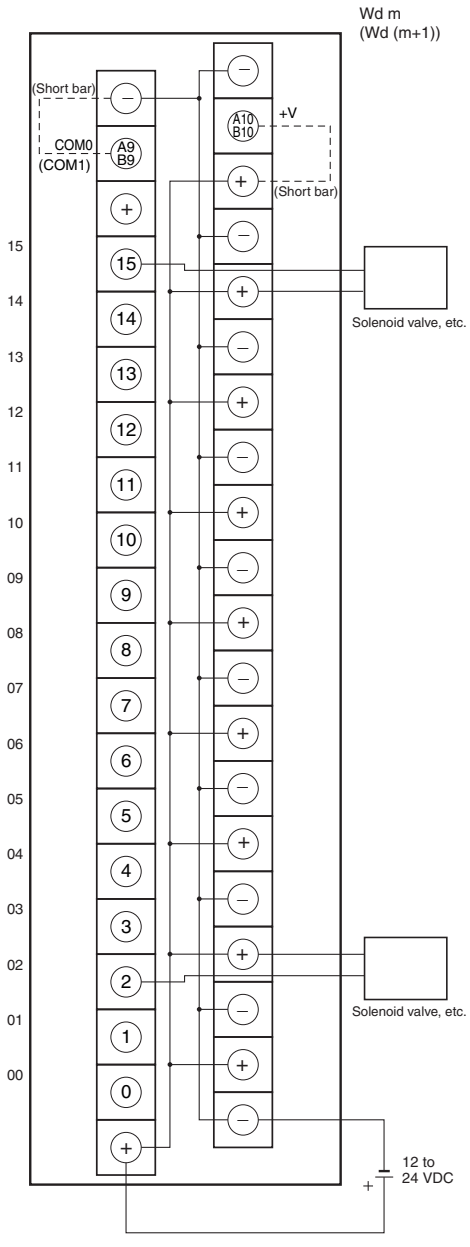

Note 1 Connect the A9/B9 terminal and the ⊖ terminal. Connect the A10/B10 terminal and the ⊕ terminal. (Use the enclosed short bar.)

2 The COM terminals are wired inside the Connector-Terminal Block Conversion Unit.

Programmable Controller I/O Unit	CJ1W-OD232
Connector-Terminal Block Conversion Unit	XW2D-40G6
Connecting Cables	XW2Z-□□□K
Connection diagram	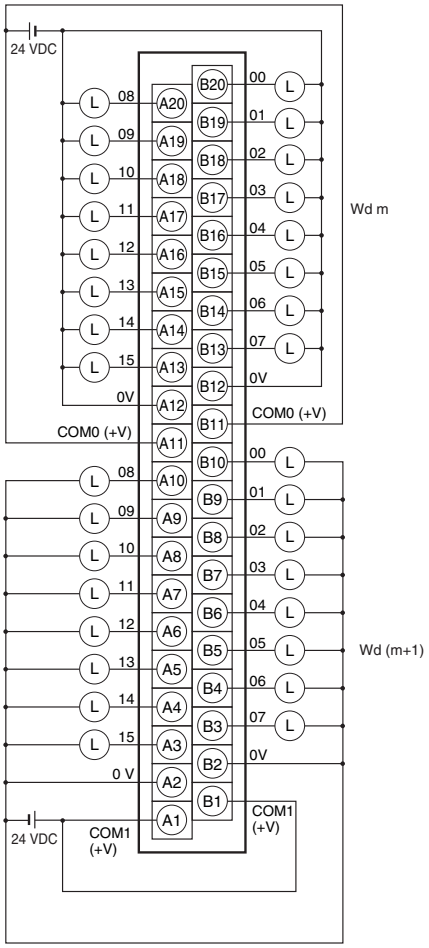

Note The COM (+V) terminals and 0V terminals are internally connected inside the Controller, but they must all be wired.

Programmable Controller I/O Unit	CJ1W-OD232
Connector-Terminal Block Conversion Unit	XW2C-20G6-IO16 (2 Units)
Connecting Cables	XW2Z-□□□N
Connection diagram	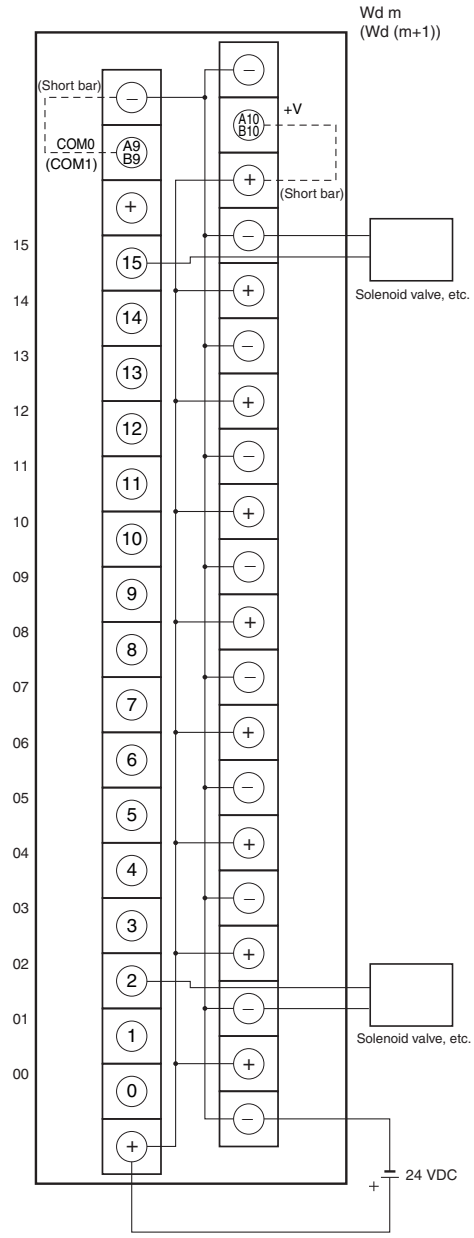

Note 1 Connect the A9/B9 terminal and the ⊖ terminal. Connect the A10/B10 terminal and the ⊕ terminal. (Use the enclosed short bar.)

2 The COM terminals are wired inside the Connector-Terminal Block Conversion Unit.

Programmable Controller I/O Unit	CJ1W-OD233
Connector-Terminal Block Conversion Unit	XW2D-40G6
Connecting Cables	XW2Z-□□□K
Connection diagram	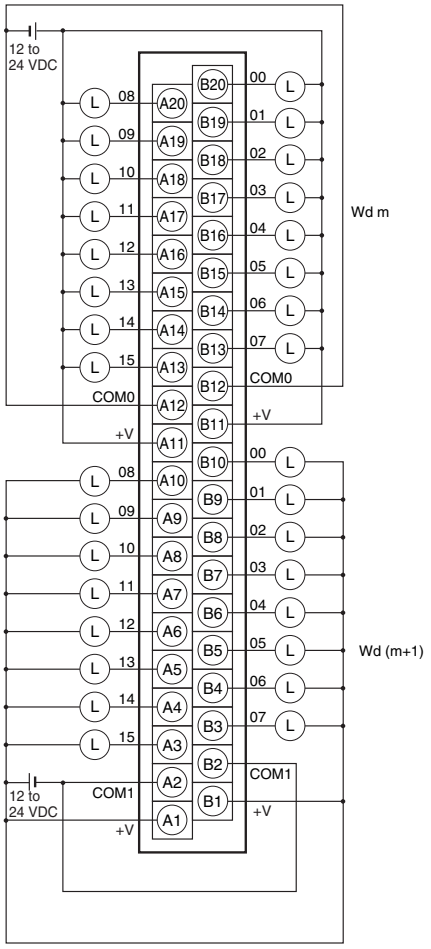

Note The +V terminals and COM terminals are internally connected inside the Controller, but they must all be wired.

Programmable Controller I/O Unit	CJ1W-OD233
Connector-Terminal Block Conversion Unit	XW2C-20G6-IO16 (2 Units)
Connecting Cables	XW2Z-□□□N
Connection diagram	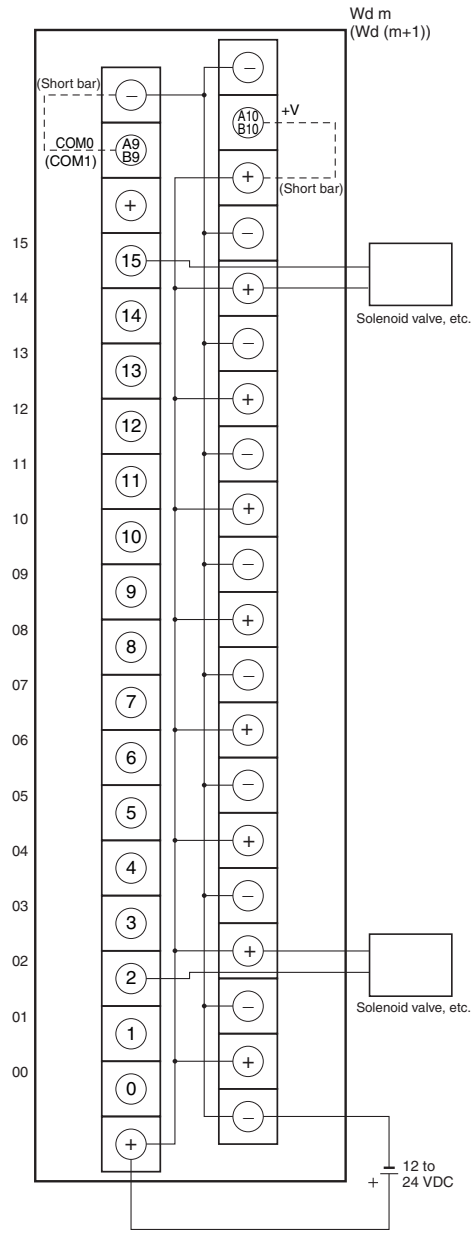

Note 1 Connect the A9/B9 terminal and the ⊖ terminal. Connect the A10/B10 terminal and the ⊕ terminal. (Use the enclosed short bar.)

2 The COM terminals are wired inside the Connector-Terminal Block Conversion Unit.

Programmable Controller I/O Unit	CJ1W-OD234
Connector-Terminal Block Conversion Unit	XW2D-40G6
Connecting Cables	XW2Z-□□□K
Connection diagram	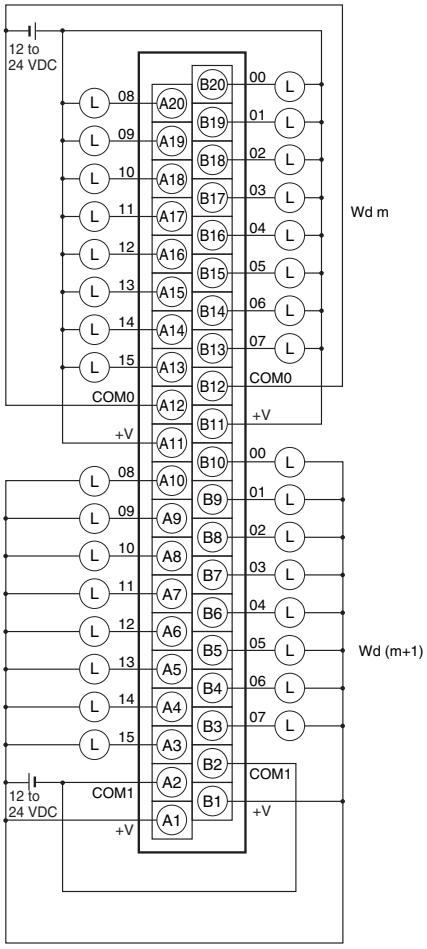

Note The +V terminals and COM terminals are internally connected inside the Controller, but they must all be wired.

Programmable Controller I/O Unit	CJ1W-OD234
Connector-Terminal Block Conversion Unit	XW2C-20G6-IO16 (2 Units)
Connecting Cables	XW2Z-□□□N
Connection diagram	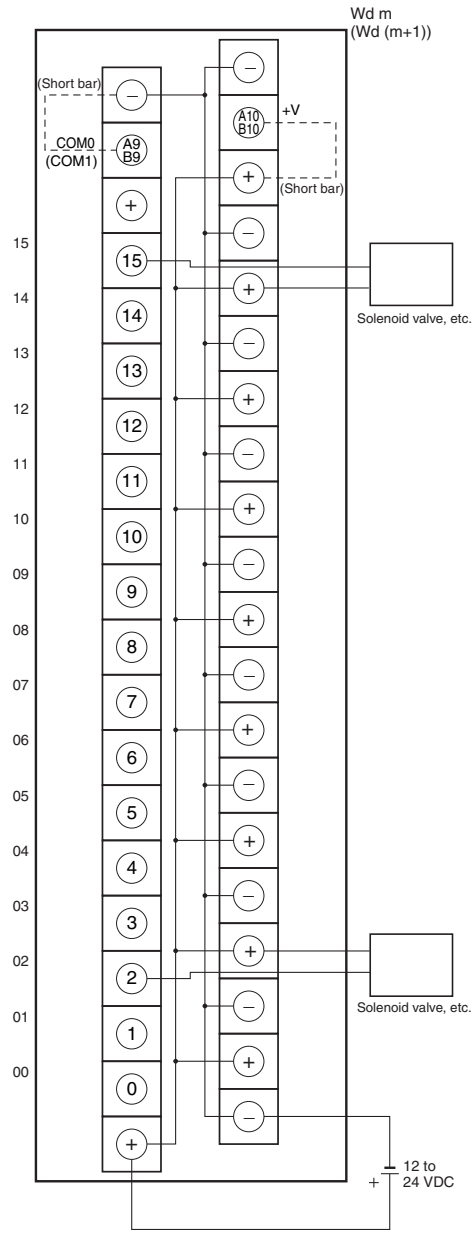

Note 1 Connect the A9/B9 terminal and the ⊖ terminal. Connect the A10/B10 terminal and the ⊕ terminal. (Use the enclosed short bar.)

2 The COM terminals are wired inside the Connector-Terminal Block Conversion Unit.

Programmable Controller I/O Unit	CJ1W-OD261
Connector-Terminal Block Conversion Unit	XW2D-40G6 XW2D-40C6
Connecting Cables	XW2Z-□□□B XW2Z-□□□BU
Connection diagram	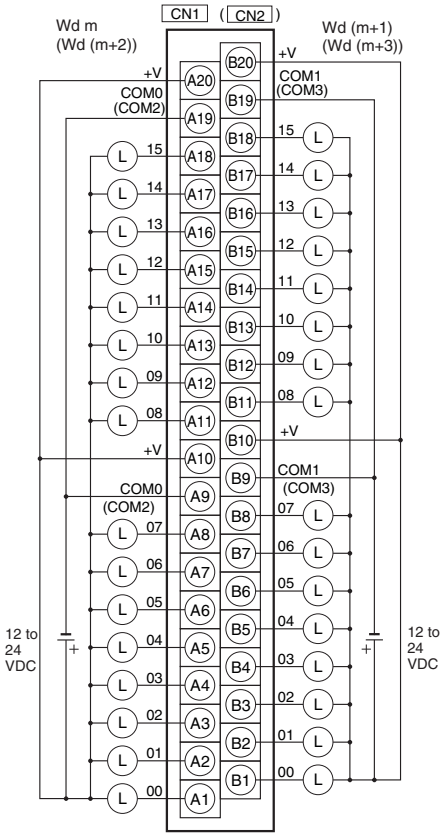

Note The +V terminals and COM terminals are internally connected inside the Controller, but they must all be wired.

Programmable Controller I/O Unit	CJ1W-OD261
Connector-Terminal Block Conversion Unit	XW2C-20G6-IO16 (2 Units)
Connecting Cables	XW2Z-□□□L
Connection diagram	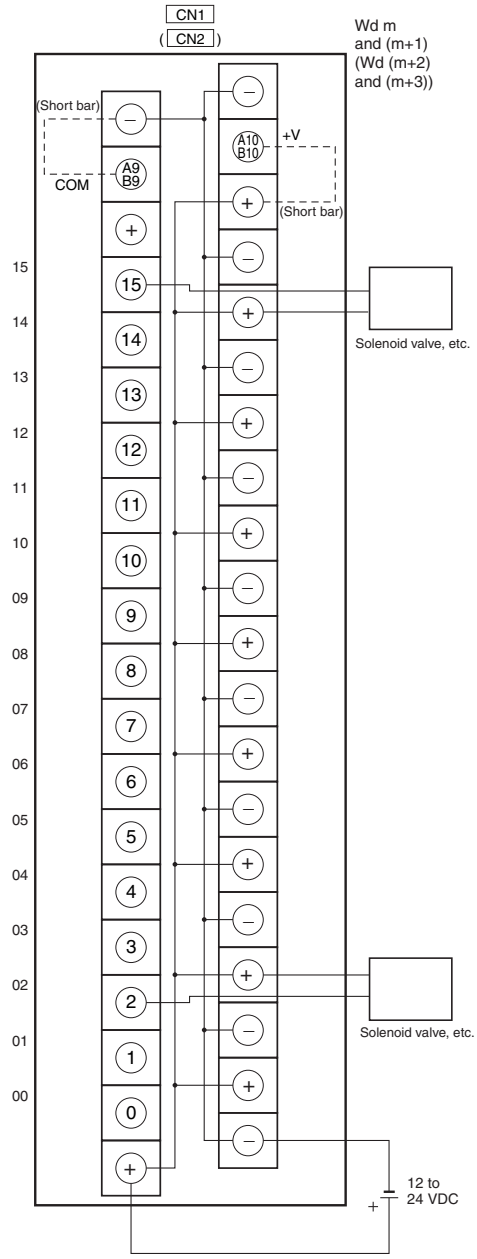

Note 1 Connect the A9/B9 terminal and the ⊖ terminal. Connect the A10/B10 terminal and the ⊕ terminal. (Use the enclosed short bar.)

2 The COM terminals are wired inside the Connector-Terminal Block Conversion Unit.

Programmable Controller I/O Unit	CJ1W-OD262
Connector-Terminal Block Conversion Unit	XW2D-40G6
Connecting Cables	XW2Z-□□□K
Connection diagram	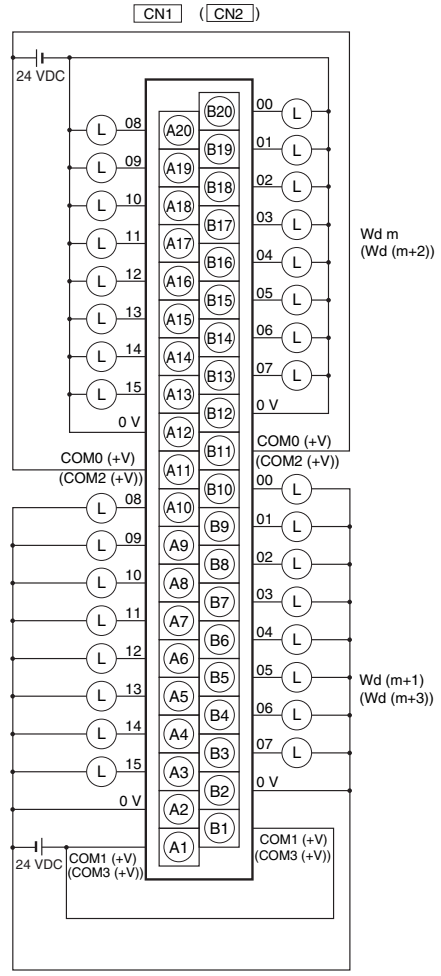

Note The COM (+V) terminals and 0V terminals are internally connected inside the Controller, but they must all be wired.

Programmable Controller I/O Unit	CJ1W-OD262
Connector-Terminal Block Conversion Unit	XW2C-20G6-IO16 (2 Units)
Connecting Cables	XW2Z-□□□N
Connection diagram	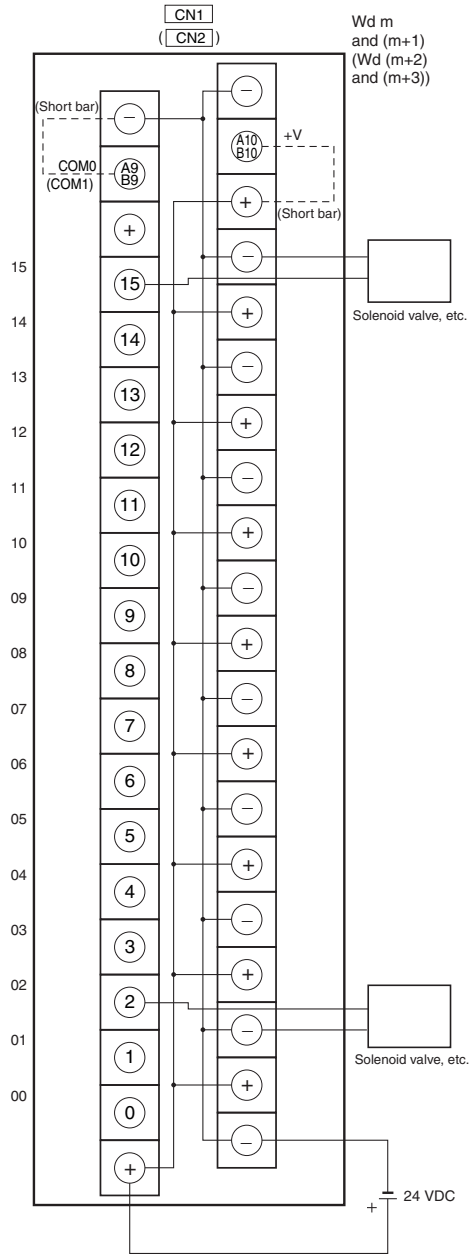

Note 1 Connect the A9/B9 terminal and the ⊖ terminal. Connect the A10/B10 terminal and the ⊕ terminal. (Use the enclosed short bar.)

2 The COM terminals are wired inside the Connector-Terminal Block Conversion Unit.

Programmable Controller I/O Unit	CJ1W-OD263
Connector-Terminal Block Conversion Unit	XW2D-40G6
Connecting Cables	XW2Z-□□□K
Connection diagram	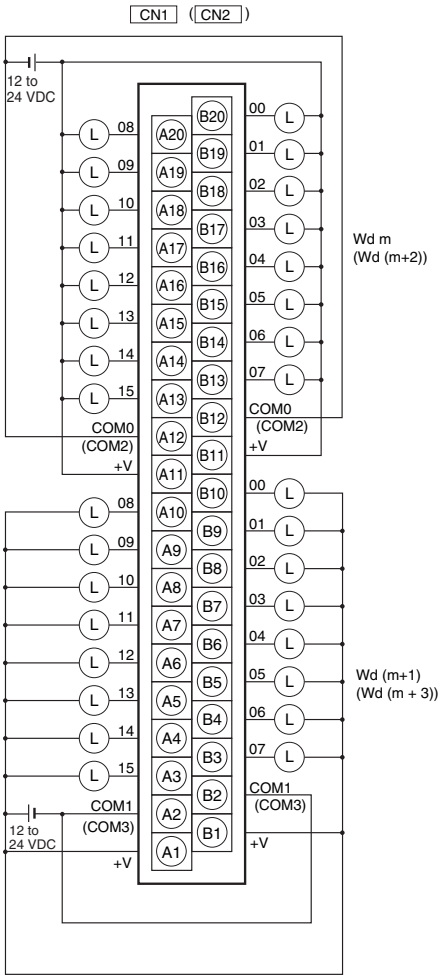

Note The +V terminals and COM terminals are internally connected inside the Controller, but they must all be wired.

Programmable Controller I/O Unit	CJ1W-OD263
Connector-Terminal Block Conversion Unit	XW2C-20G6-IO16 (2 Units)
Connecting Cables	XW2Z-□□□N
Connection diagram	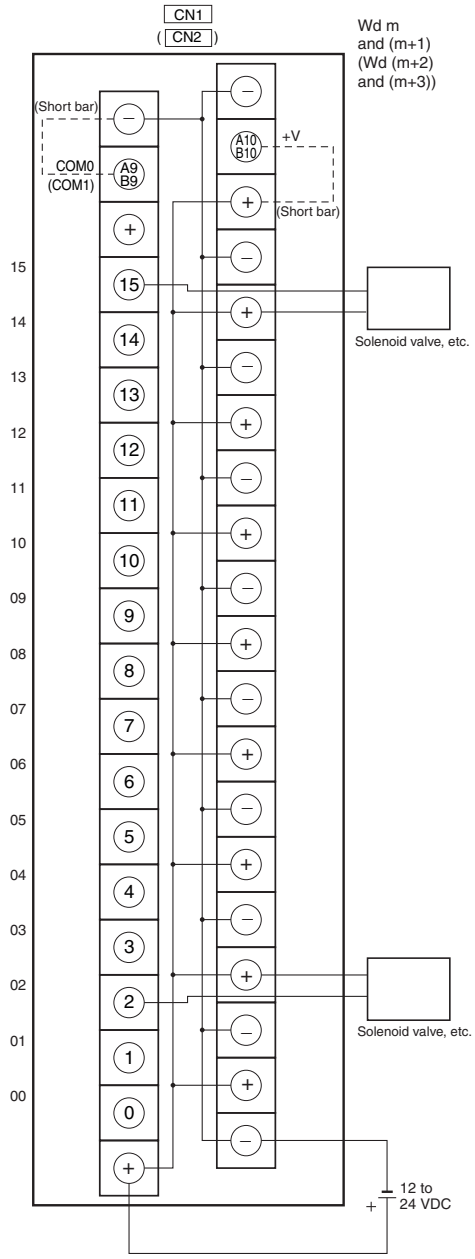

Note 1 Connect the A9/B9 terminal and the ⊖ terminal. Connect the A10/B10 terminal and the ⊕ terminal. (Use the enclosed short bar.)

2 The COM terminals are wired inside the Connector-Terminal Block Conversion Unit.

● Inputs and Outputs

Programmable Controller I/O Unit	CJ1W-MD231
Connector-Terminal Block Conversion Unit	XW2D-20G6
Connecting Cables	XW2Z-□□□A
Connection diagram	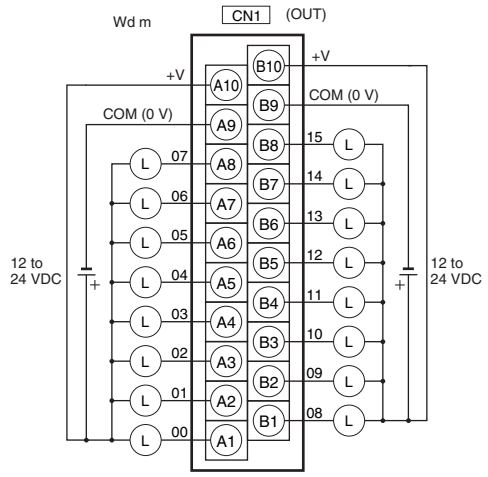

Note 1 The polarity for input power supply connections indicated with dotted lines (- - - - -) can be connected in either direction.

2 The COM terminals are internally connected inside the Controller, but they must all be wired.

Programmable Controller I/O Unit	CJ1W-MD231
Connector-Terminal Block Conversion Unit	XW2C-20G6-IO16
Connecting Cables	XW2Z-□□□A

Connection diagram

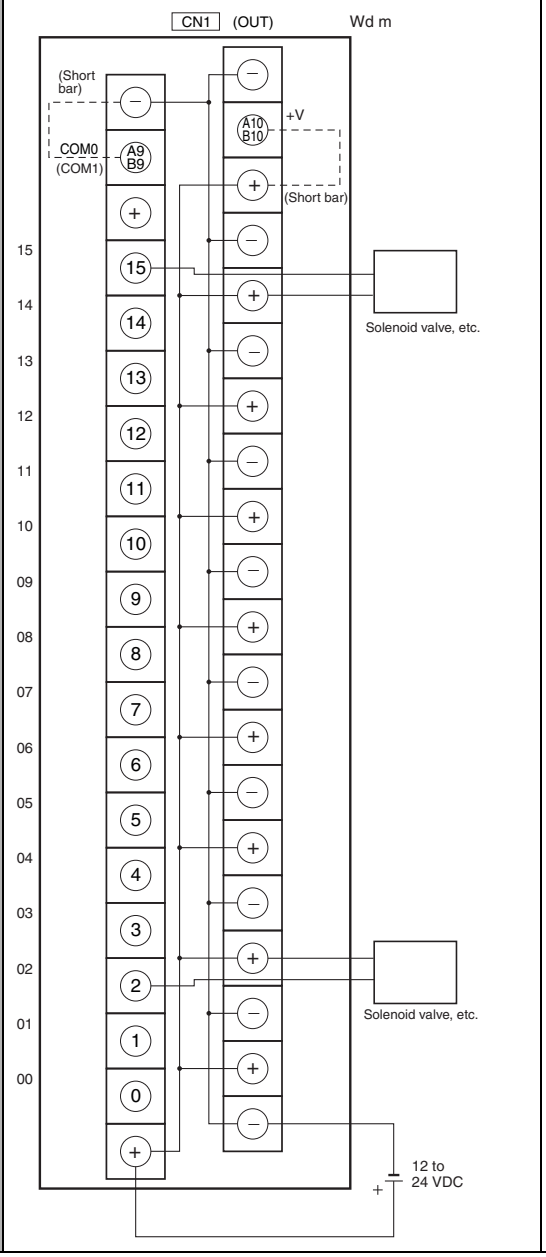

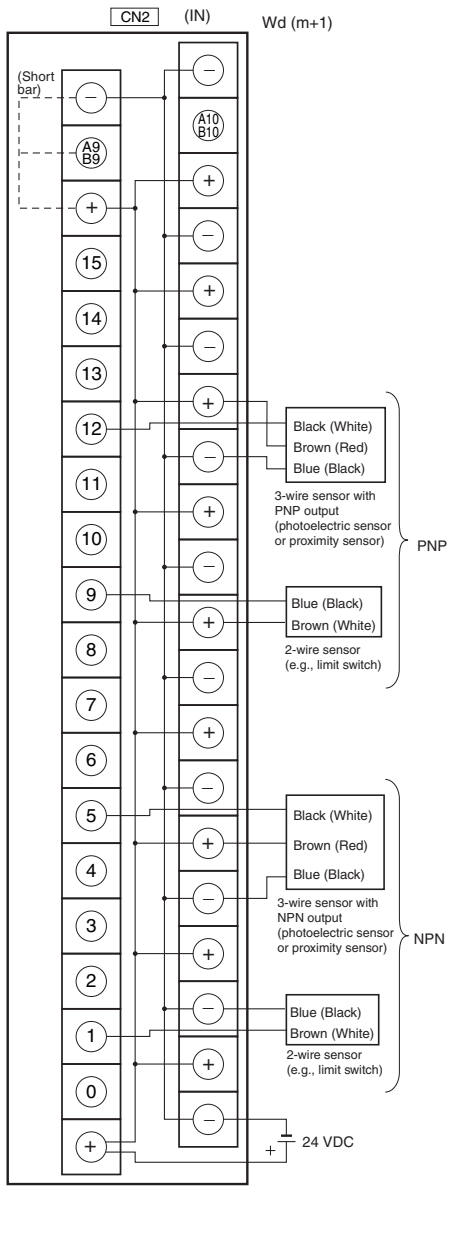

Note 1 Connect the A9/B9 terminal and the ⊖ terminal.
Connect the A10/B10 terminal and the ⊕ terminal.
(Use the enclosed short bar.)

2 The COM terminals are wired inside the Connector-Terminal Block Conversion Unit.

Note 1 Connect the A9/B9 terminal and the ⊕ terminal for NPN.
Connect the A9/B9 terminal and the ⊖ terminal for PNP.
(Use the enclosed short bar.)

2 The COM terminals are wired inside the Connector-Terminal Block Conversion Unit.

Programmable Controller I/O Unit	CJ1W-MD232
Connector-Terminal Block Conversion Unit	XW2D-20G6
Connecting Cables	XW2Z-□□□X
Connection diagram	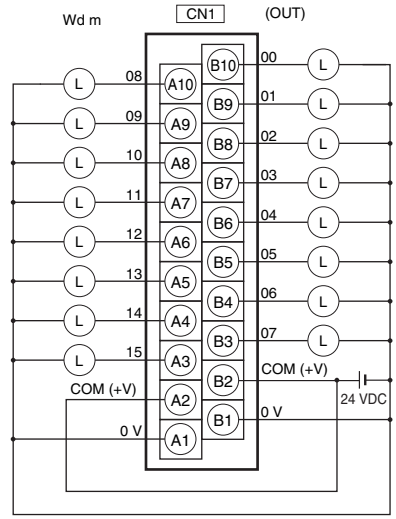

Note 1 The polarity for input power supply connections indicated with dotted lines (_____) can be connected in either direction.

2 The COM terminals and 0V terminals are internally connected inside the Controller, but they must all be wired.

Programmable Controller I/O Unit	CJ1W-MD233
Connector-Terminal Block Conversion Unit	XW2D-20G6
Connecting Cables	XW2Z-□□□X
Connection diagram	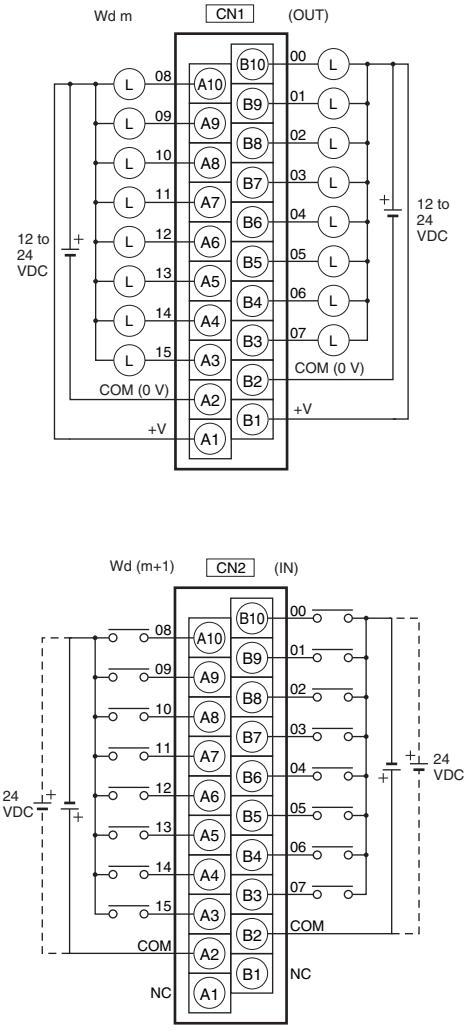

Note 1 The polarity for input power supply connections indicated with dotted lines (_____) can be connected in either direction.

2 The +V terminals and COM terminals are internally connected inside the Controller, but they must all be wired.

Programmable Controller I/O Unit	CJ1W-MD261	
Connector-Terminal Block Conversion Unit	XW2D-40G6 XW2D-40G6RF	
Connecting Cables	XW2Z-□□□B	
Connection diagram	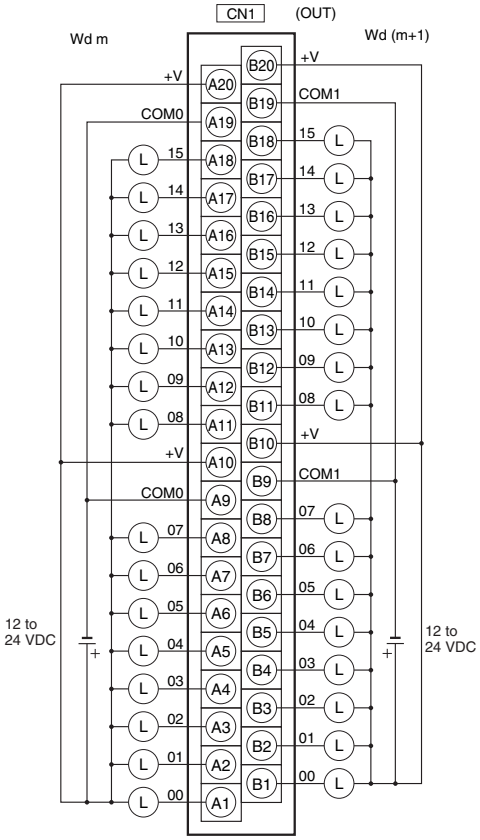	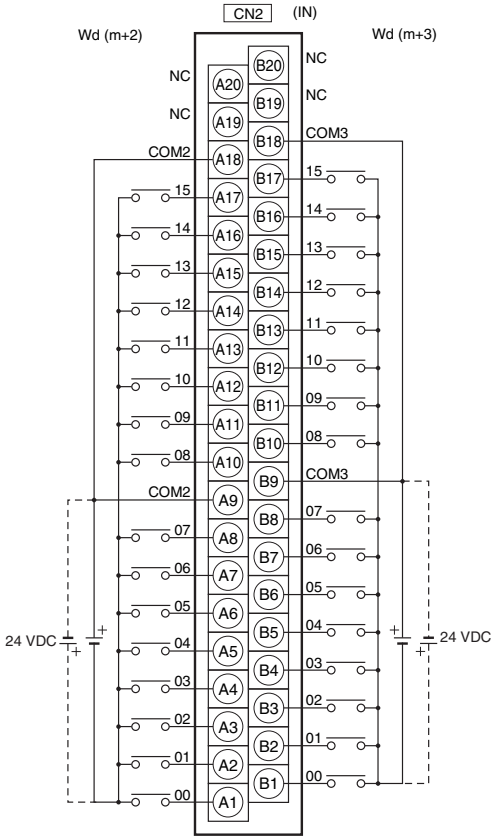

Note The +V terminals and COM terminals are internally connected inside the Controller, but they must all be wired.

Note 1 The polarity for input power supply connections indicated with dotted lines (_____) can be connected in either direction provided that the same polarity is used for the commons for rows A and B.

2 Both COM0 and COM1 have two pins each. They are internally connected inside the Controller, but they must all be wired.

Programmable Controller I/O Unit	CJ1W-MD261	
Connector-Terminal Block Conversion Unit	XW2C-20G6-IO16 (2 Units)	XW2C-20G6-IO16 (2 Units)
Connecting Cables	XW2Z-□□□L	XW2Z-□□□D
Connection diagram	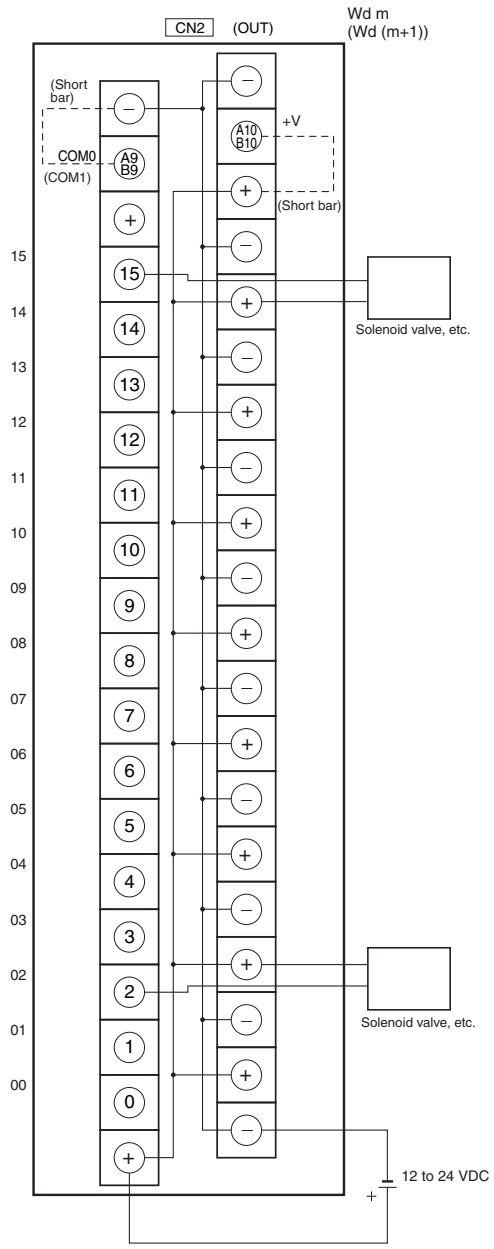	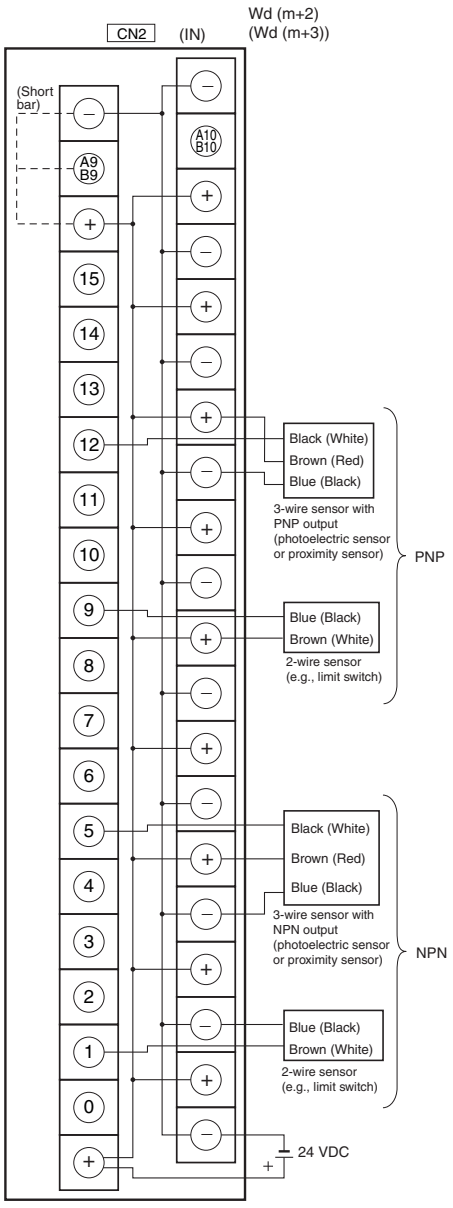

Note 1 Connect the A9/B9 terminal and the ⊖ terminal.
Connect the A10/B10 terminal and the ⊕ terminal.
(Use the enclosed short bar.)

2 The COM terminals are wired inside the Connector-Terminal Block Conversion Unit.

Note 1 Connect the A9/B9 terminal and the ⊕ terminal for NPN.
Connect the A9/B9 terminal and the ⊖ terminal for PNP.
(Use the enclosed short bar.)

2 The COM terminals are wired inside the Connector-Terminal Block Conversion Unit.

Programmable Controller I/O Unit	CJ1W-MD263
Connector-Terminal Block Conversion Unit	XW2D-40G6 XW2D-40G6-RM
Connecting Cables	XW2Z-□□□K
Connection diagram	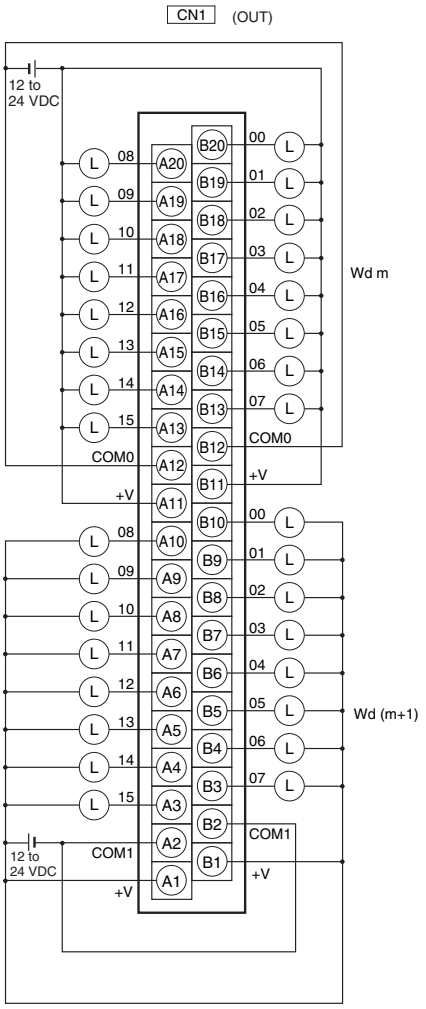 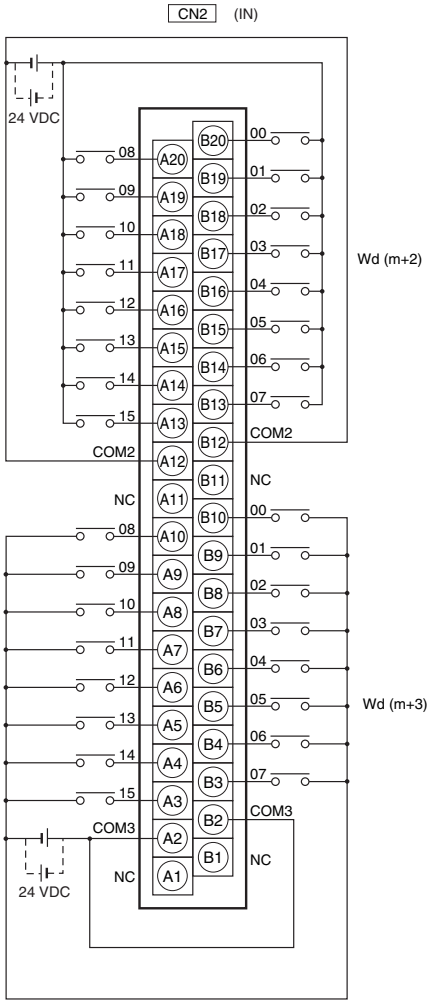

Note The +V terminals and COM terminals are internally connected inside the Controller, but they must all be wired.

Note 1 The polarity for input power supply connections indicated with dotted lines (_____) can be connected in either direction.

2 Both COM0 and COM1 have two pins each. They are internally connected inside the Controller, but they must all be wired.

Programmable Controller I/O Unit	CJ1W-MD263
Connector-Terminal Block Conversion Unit	XW2C-20G6-IO16 (2 Units)
Connecting Cables	XW2Z-□□□N
Connection diagram	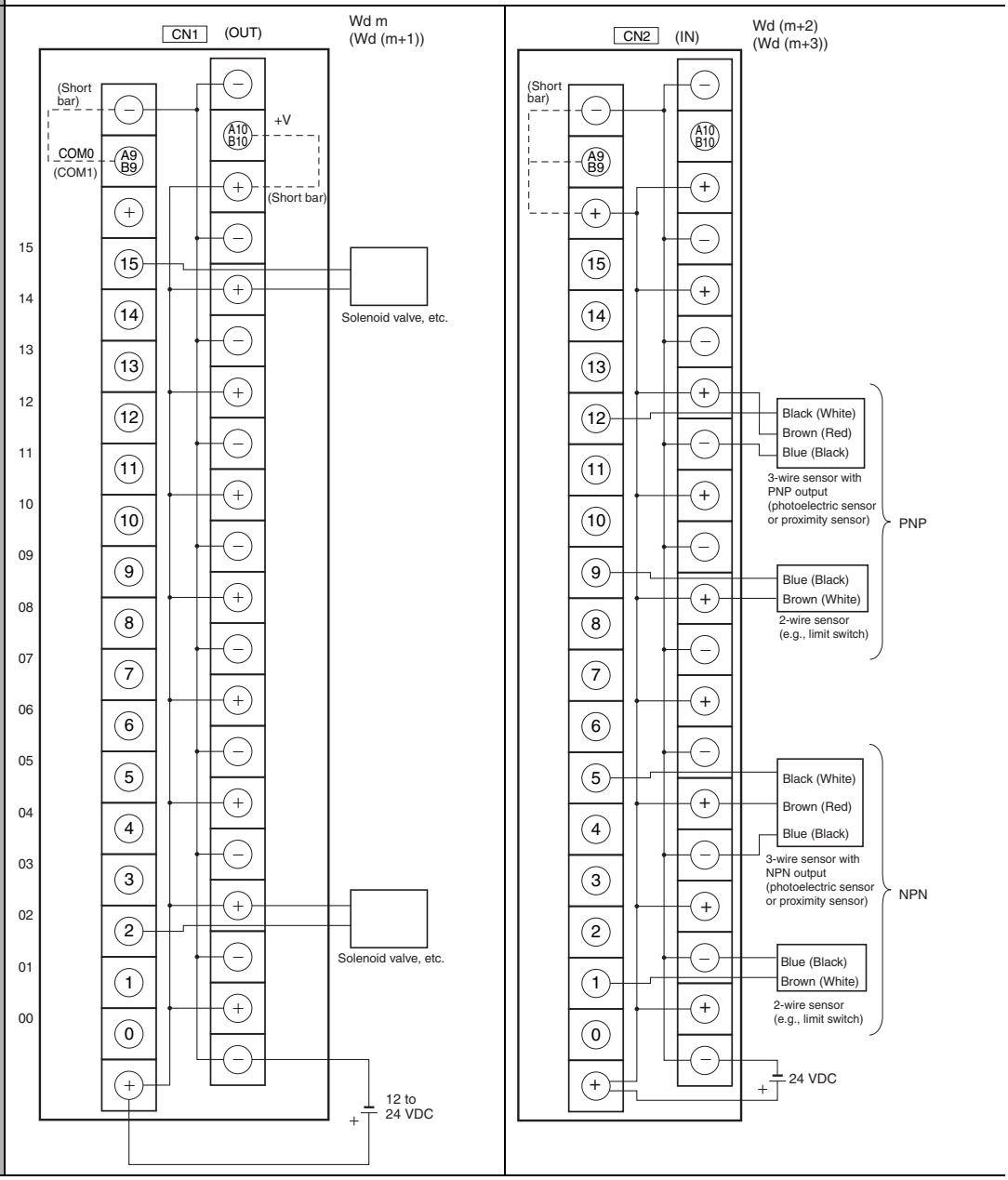

Note 1 Connect the A9/B9 terminal and the ⊖ terminal.
Connect the A10/B10 terminal and the ⊕ terminal.
(Use the enclosed short bar.)

2 The COM terminals are wired inside the Connector-Terminal Block Conversion Unit.

Note 1 Connect the A9/B9 terminal and the ⊕ terminal for NPN.
Connect the A9/B9 terminal and the ⊖ terminal for PNP.
(Use the enclosed short bar.)

2 The COM terminals are wired inside the Connector-Terminal Block Conversion Unit.

Programmable Controller I/O Unit	CJ1W-MD563	
Connector-Terminal Block Conversion Unit	XW2D-40G6 XW2D-40G6-RM	
Connecting Cables	XW2Z-□□□K	
Connection diagram	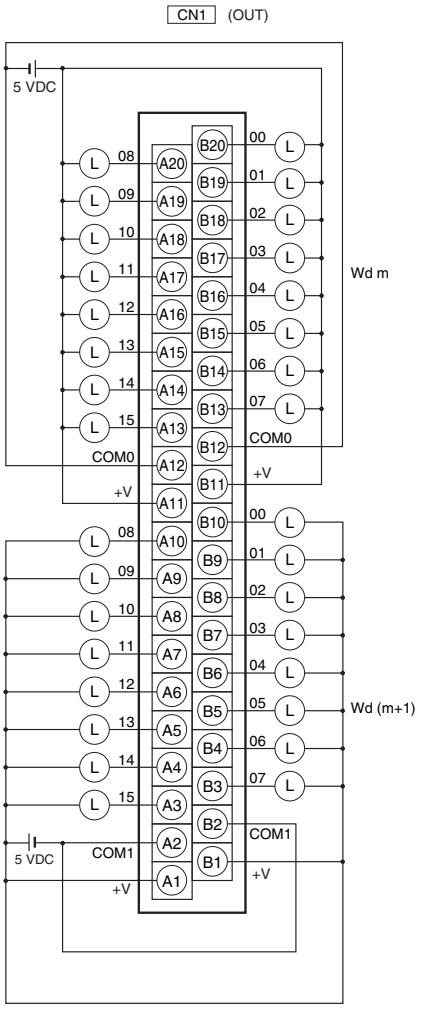	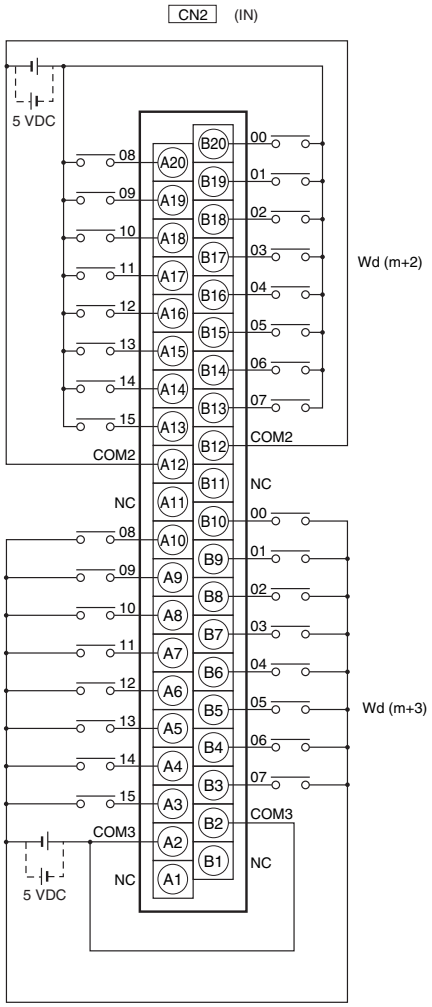
	Note 1 The +V terminals and COM terminals are internally connected inside the Controller, but they must all be wired. **2** The power supply voltage for the CJ1W-MD563 is 5 V.	**Note 1** The COM terminals are internally connected inside the Controller, but they must all be wired. **2** The power supply voltage for the CJ1W-MD563 is 5 V.

Connection Diagrams for I/O Relay Terminals

Connection examples and internal connection diagrams for I/O Relay Terminals connected to Basic I/O Units are shown below.

● Inputs

G7TC I/O Relay Terminals

G7TC-ID16

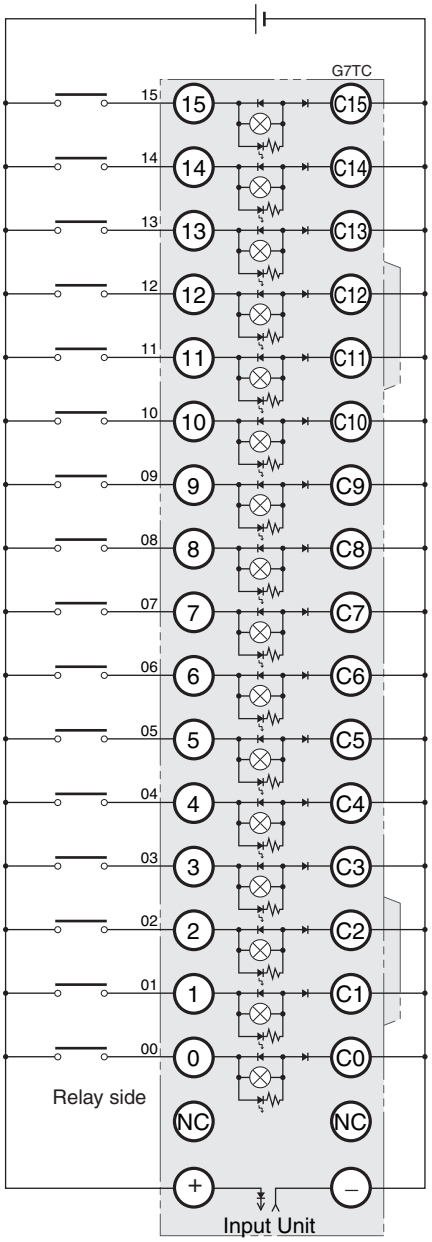

TOP VIEW

Note 1 Inputs to the Input Units and I/O Relay Terminals use isolated contacts. “00” to “15” are the input bit numbers for the Input Unit and the I/O Relay Terminal.

2 Use the G78-04 short bar to short to the common terminal.

G7TC-IA16

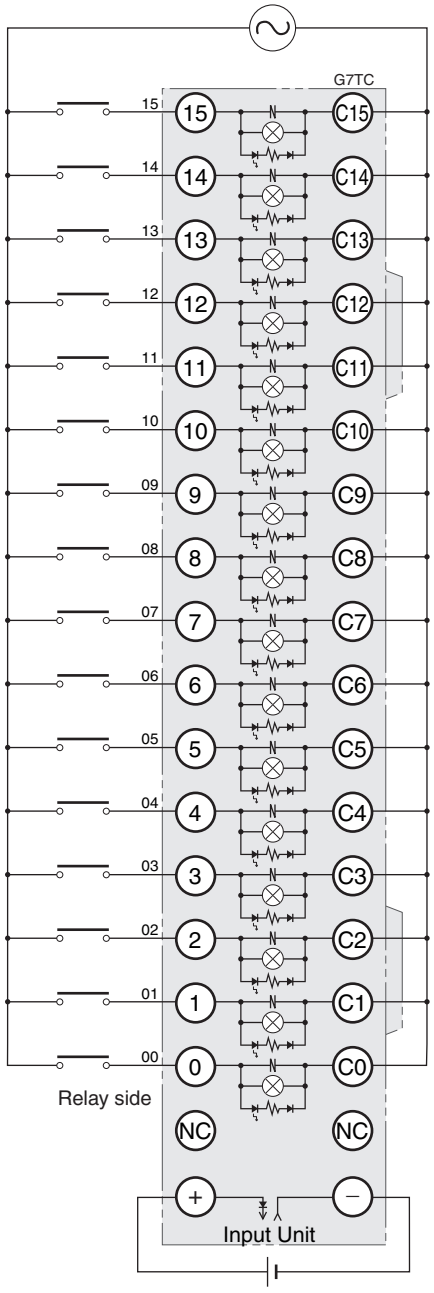

TOP VIEW

Note 1 Inputs to the Input Units and I/O Relay Terminals use isolated contacts. “00” to “15” are the input bit numbers for the Input Unit and the I/O Relay Terminal.

2 Use the G78-04 short bar to short to the common terminal.

● Outputs

G70D-V Relay Terminals

G70D-VSOC16

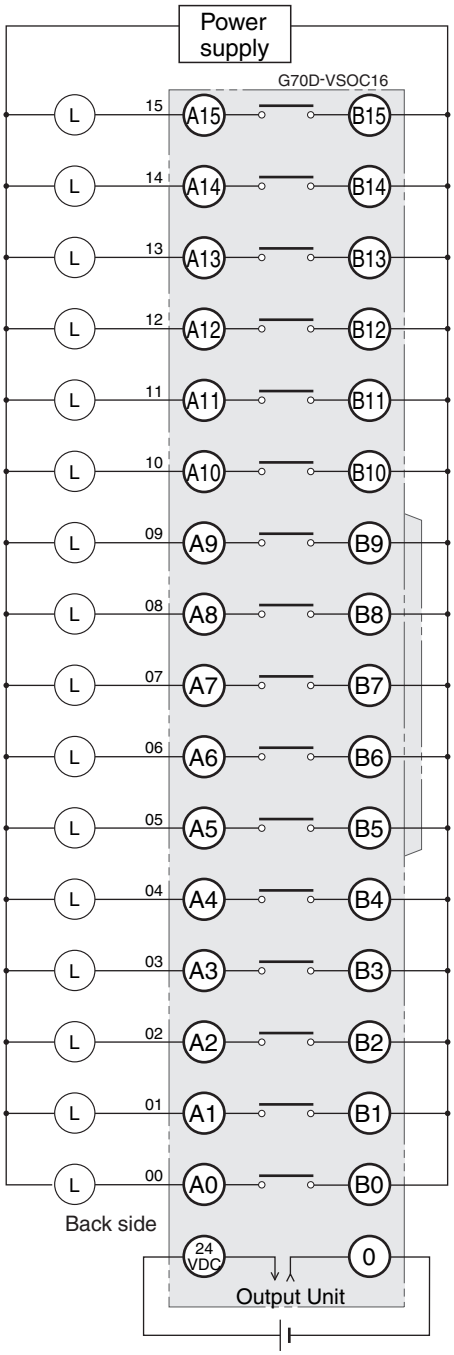

TOP VIEW

Note 1 They are also isolated from the Output Unit and I/O Relay Terminal. “00” to “15” are the output numbers for the Output Unit and the I/O Relay Terminal.

2 Use the G6D-4-SB short bar to short to the common terminal.

G70D-VSOC16+G70D-ET

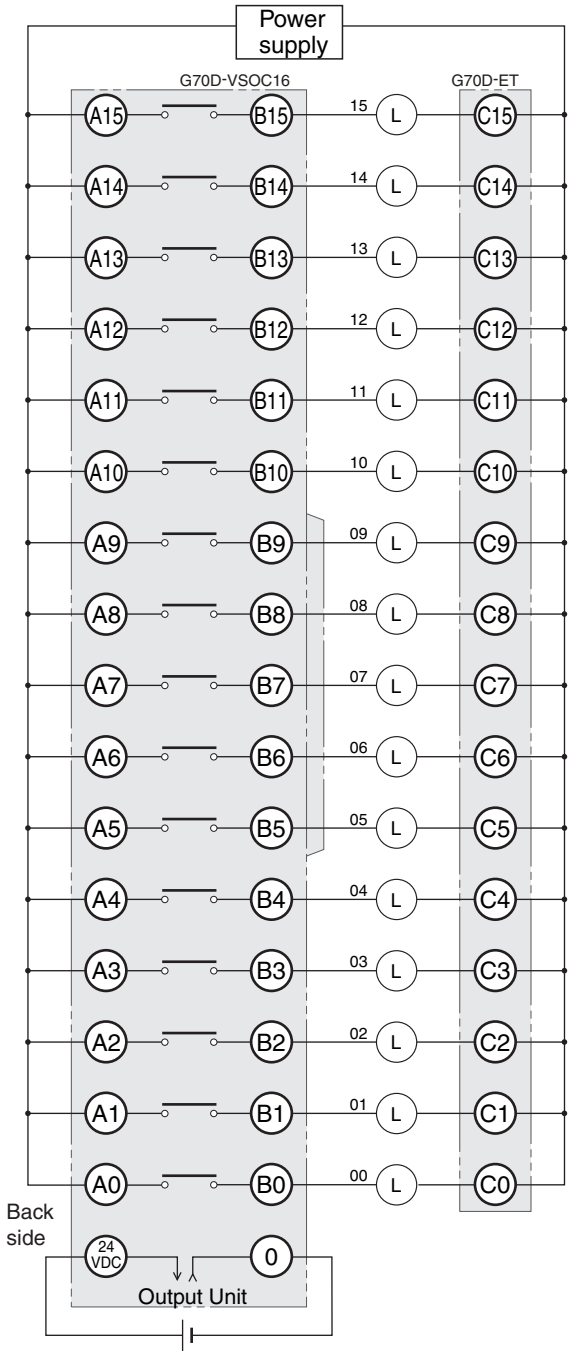

TOP VIEW

Note 1 They are also isolated from the Output Unit and I/O Relay Terminal. “00” to “15” are the output numbers for the Output Unit and the I/O Relay Terminal.

2 Use the G6D-4-SB short bar to short to the common terminal.

G70D Relay Terminals

G70D-SOC16

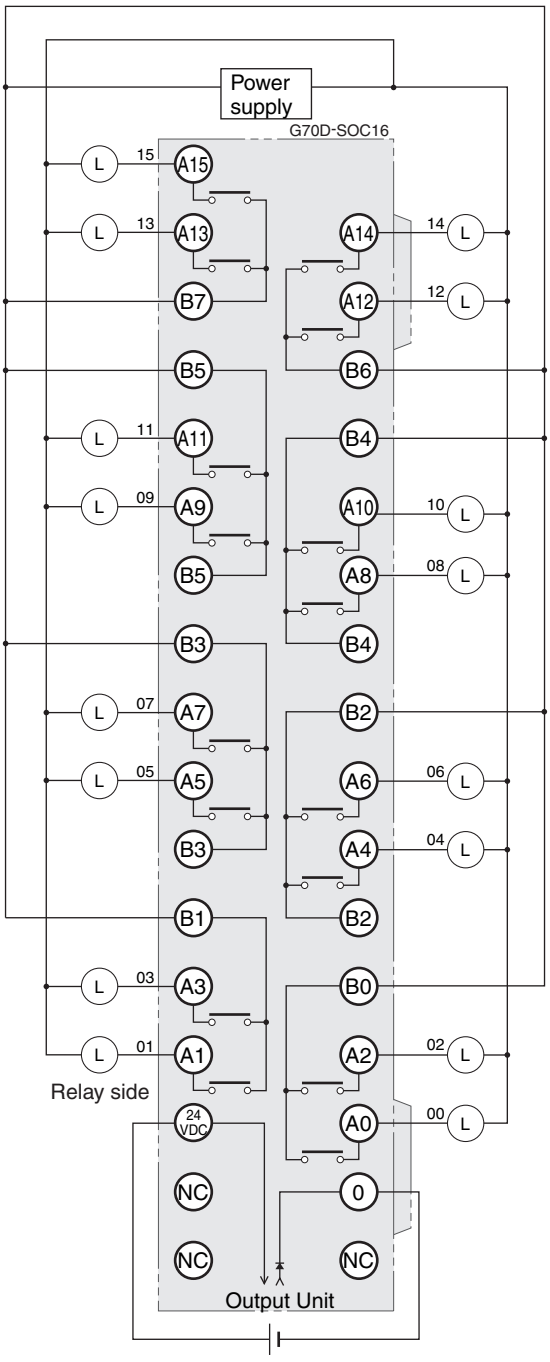

TOP VIEW

Note Every two outputs share a common. The current supplied is 3 A per common. They are also isolated from the Output Unit and I/O Relay Terminal. “00” to “15” are the output numbers for the Output Unit and the I/O Relay Terminal.

G70D-SOC08

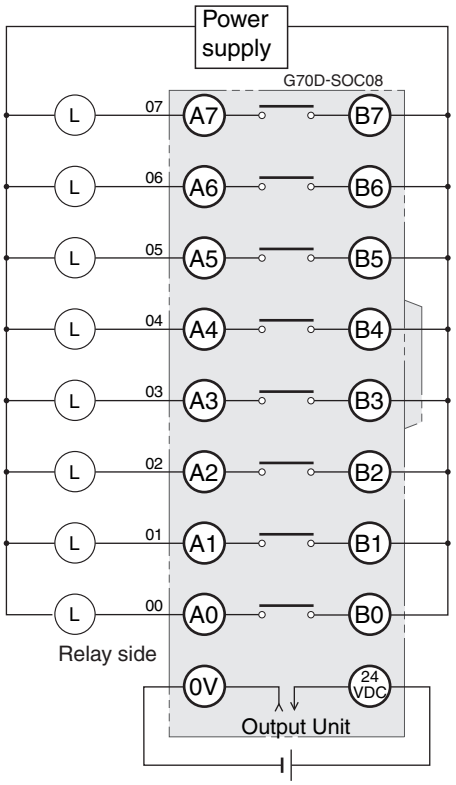

TOP VIEW

Note **1** All outputs are independent. They are also isolated from the Output Unit and I/O Relay Terminal. “00” to “07” are the output numbers for the Output Unit and the I/O Relay Terminal.

2 Use the G6D-4-SB short bar to short to the common terminal.

G70R Relay Terminals

G70R-SOC08

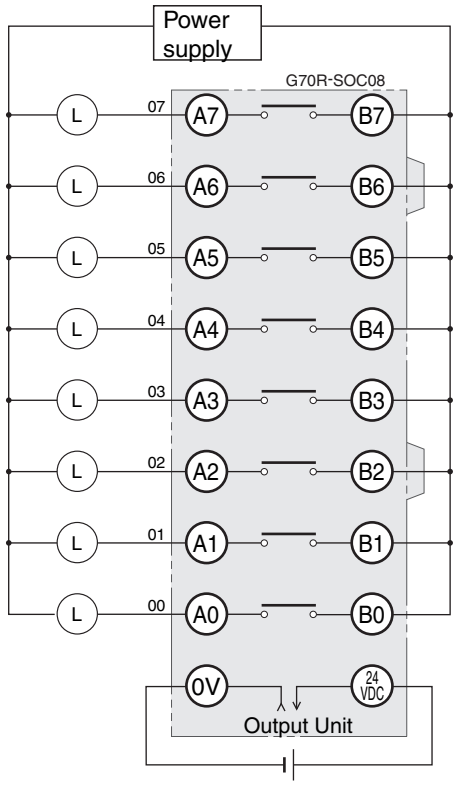

TOP VIEW

Note 1 All outputs are independent. They are also isolated from the Output Unit and I/O Relay Terminal. “00” and “07” are the output numbers for the Output Unit and the I/O Relay Terminal.

2 Use the G6D-4-SB short bar to short to the common terminal.

G7TC I/O Relay Terminals

G7TC-OC16/OC08

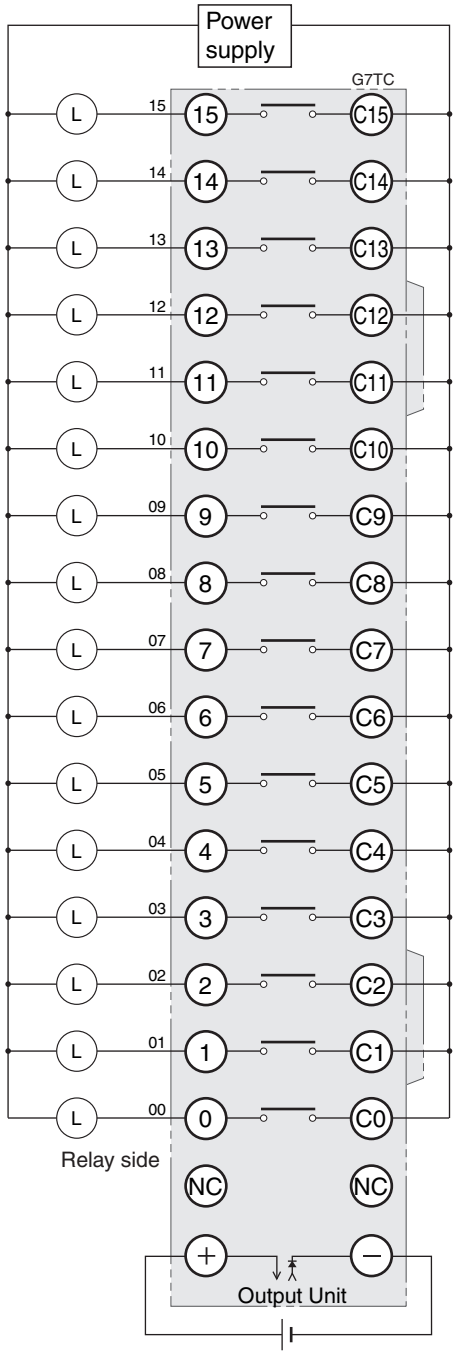

TOP VIEW

Note 1 All outputs are independent. They are also isolated from the Output Unit and I/O Relay Terminal. “00” to “15” are the output numbers for the Output Unit and the I/O Relay Terminal.

2 The G7TC-OC08 has only 8 outputs and therefore does not have 8 to 15 and C8 to C15.

3 Use the G78-04 short bar to short to the common terminal.

G7TC I/O Relay Terminals

G7TC-OC16-1

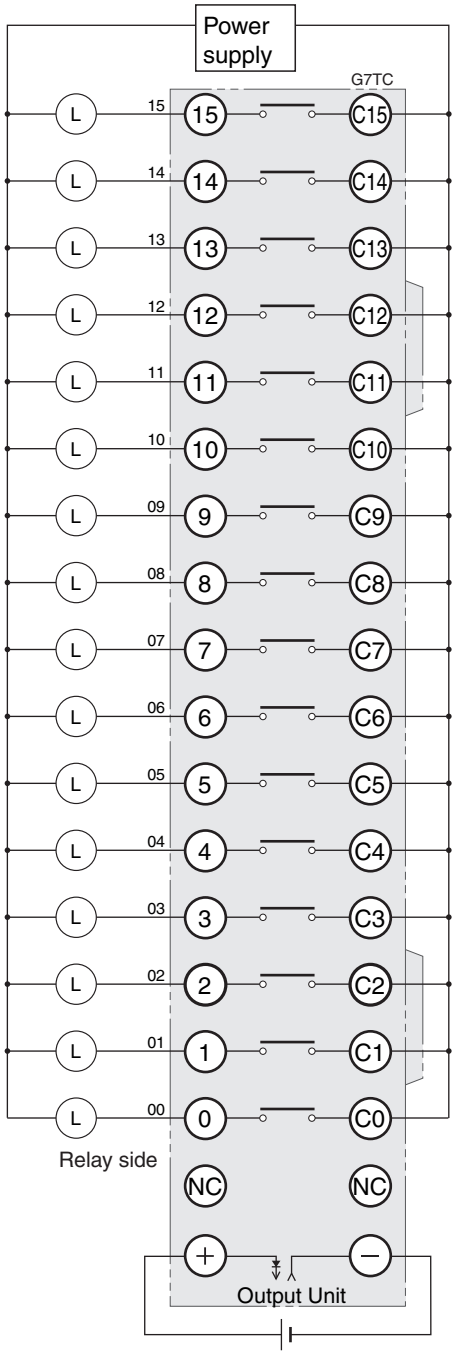

TOP VIEW

Note 1 All outputs are independent. They are also isolated from the Output Unit and I/O Relay Terminal. “00” to “15” are the output numbers for the Output Unit and the I/O Relay Terminal.

2 Use the G78-04 short bar to short to the common terminal.

G70A-ZOC16 Relay Terminal Socket

G70A-ZOC16-3+G2R-1-S (16 Units)

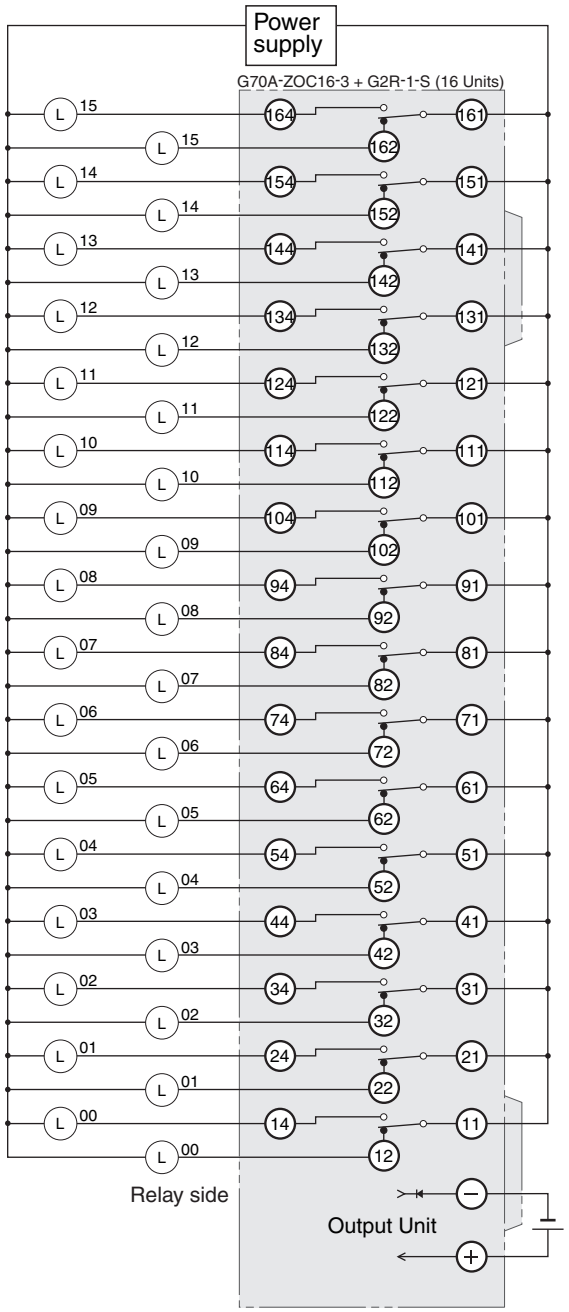

TOP VIEW

Note 1 The above diagram is an example with the G2R-1-S(N) mounted to the G70A-ZOC16-3.

2 All outputs are independent. They are also isolated from the Output Unit and I/O Relay Terminal. “00” to “15” are the output numbers for the Output Unit and the I/O Relay Terminal.

A-3 Dimensions

A-3-1 NJ-series CPU Units

NJ501-□□□□ and NJ301-□□□□

Unit: mm

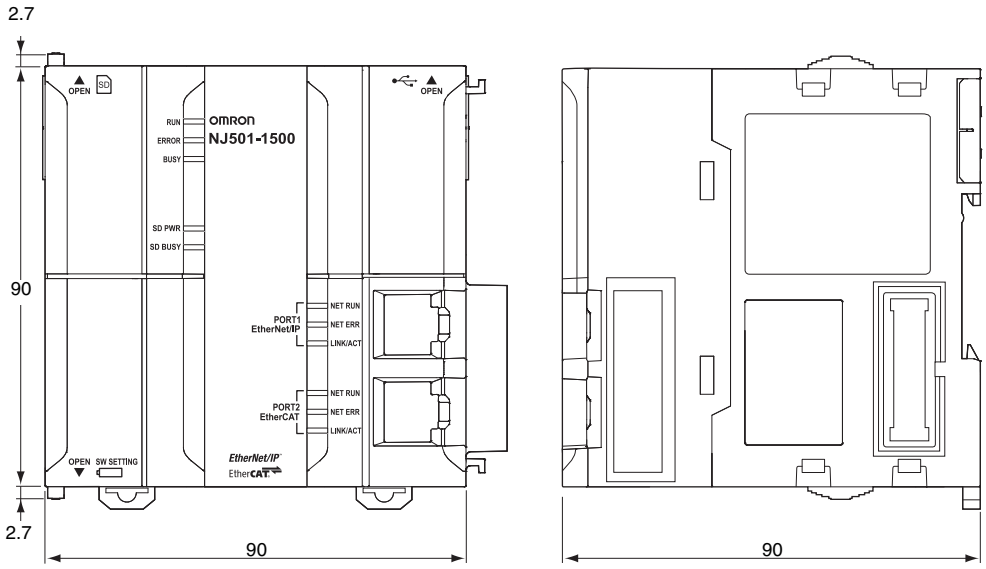

A-3-2 NJ-series Power Supply Units

NJ-PA3001

Unit: mm

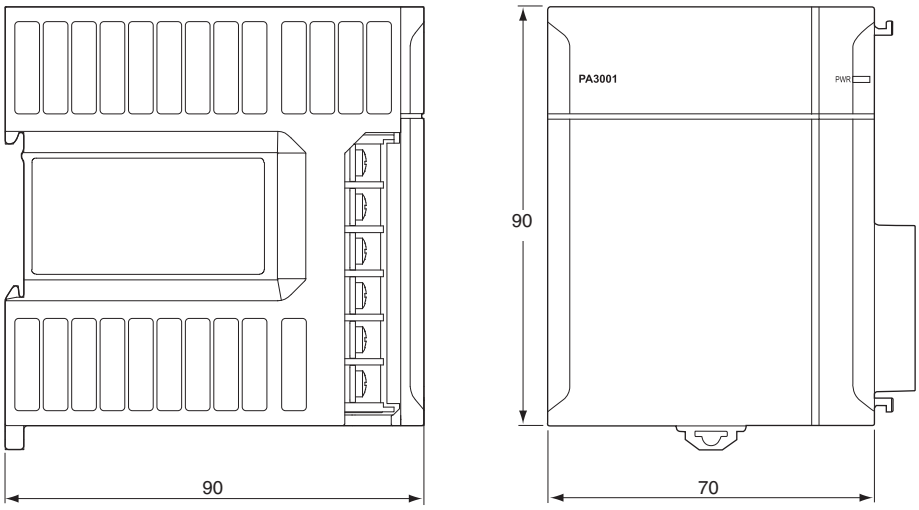

NJ-PD3001

Unit: mm

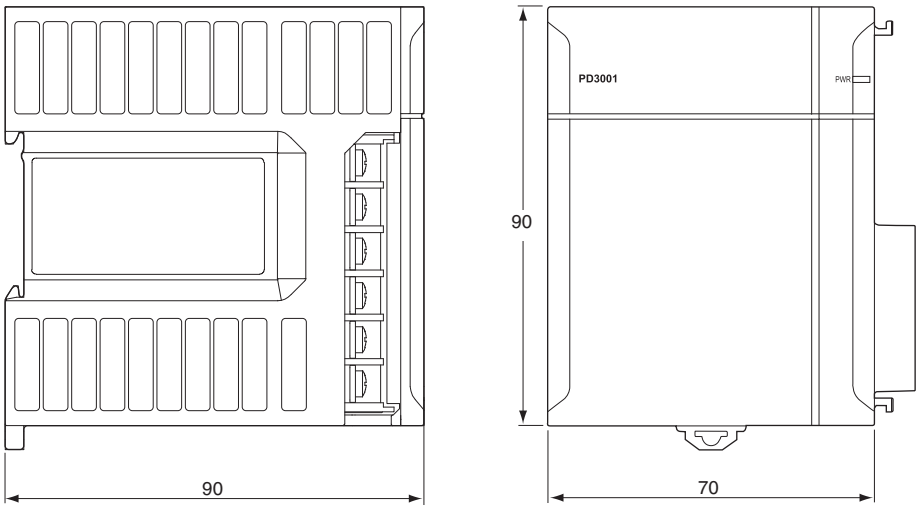

A-3-3 CJ-series Basic I/O Units

8/16-point Units with 18-terminal Terminal Blocks

Unit: mm

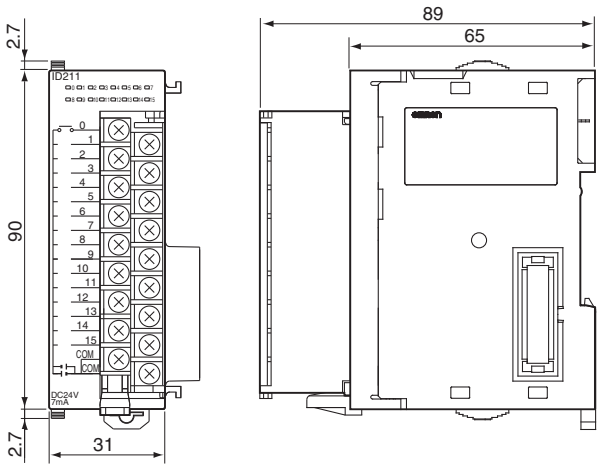

32-point Units (Input Units and Output Units)

Unit: mm

Units with Fujitsu-compatible Connector (40-pin × 1)

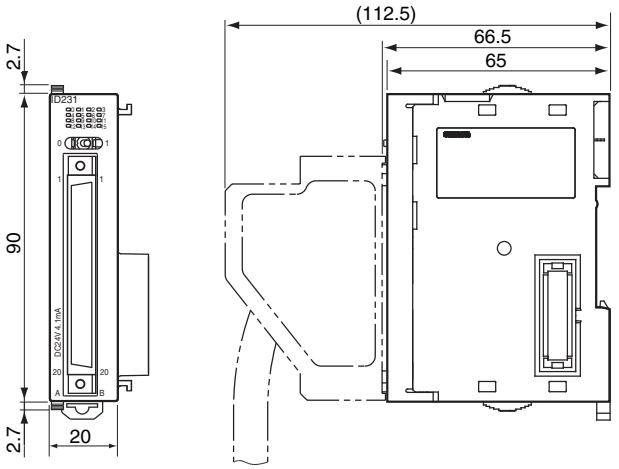

Units with MIL Connector (40-pin × 1)

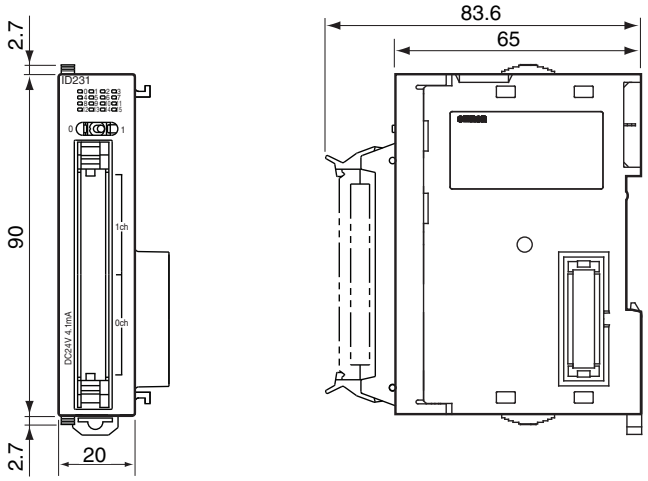

32-point Units (24-VDC Input/Transistor Output Units)

Units with Fujitsu-compatible Connector (24-pin × 2)

Unit: mm

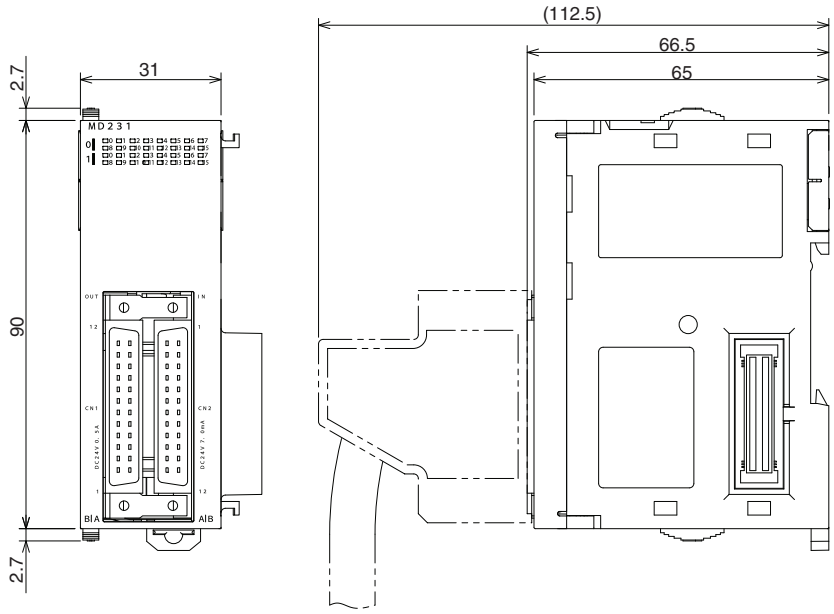

Units with MIL Connector (20-pin × 2)

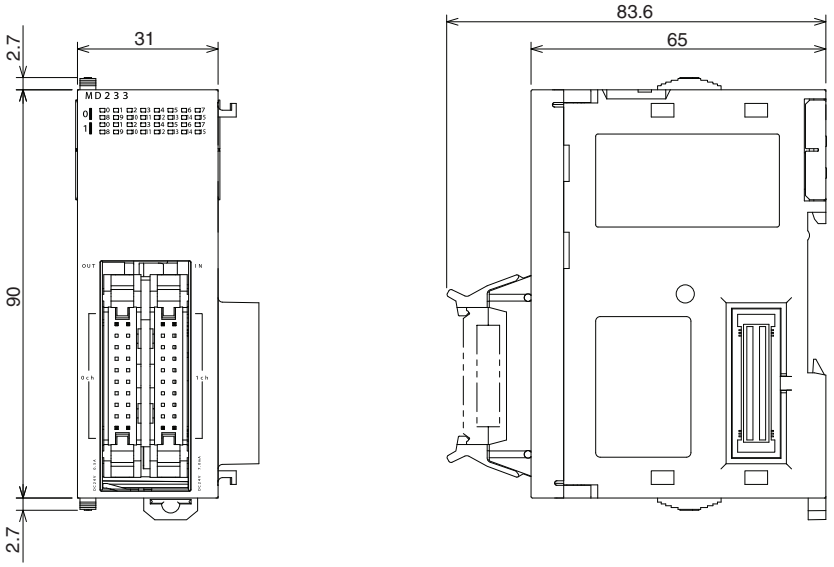

64-point Units (Input Units, Output Units, 24-VDC Input/Transistor Output Units, TTL I/O Units)

Units with Fujitsu-compatible Connector (40-pin × 2)

Unit: mm

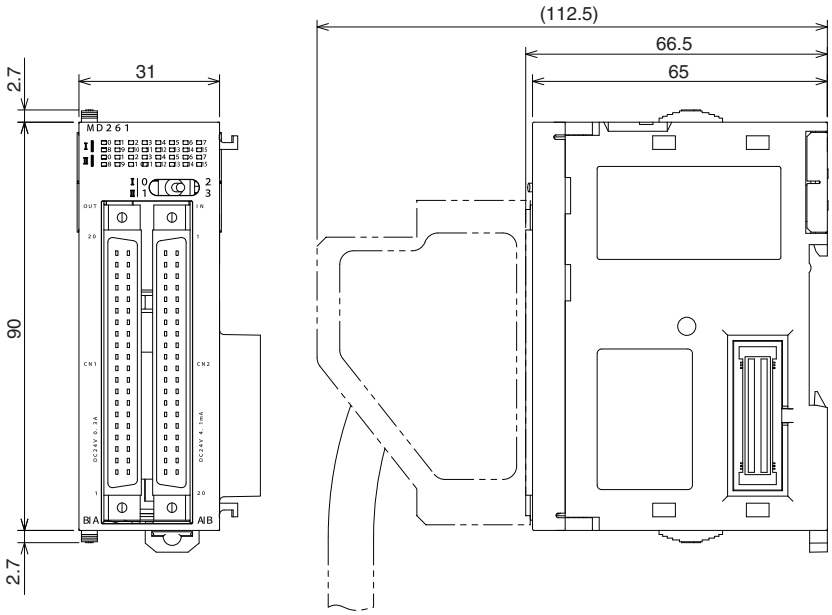

Units with MIL Connector (40-pin × 2)

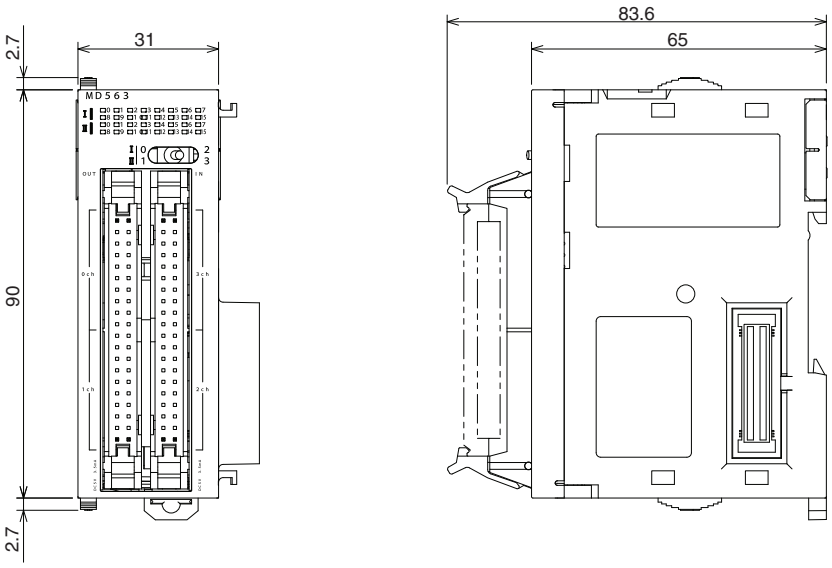

A-3-4 B7A Interface Unit

CJ1W-B7A□□

Unit: mm

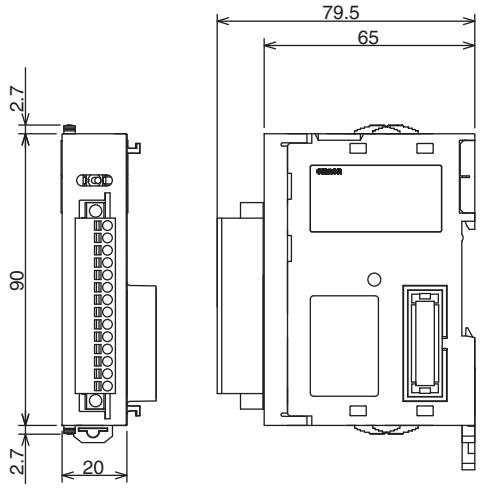

A-3-5 CJ-series I/O Control Unit and I/O Interface Unit

Unit: mm

CJ1W-IC101
I/O Control Unit

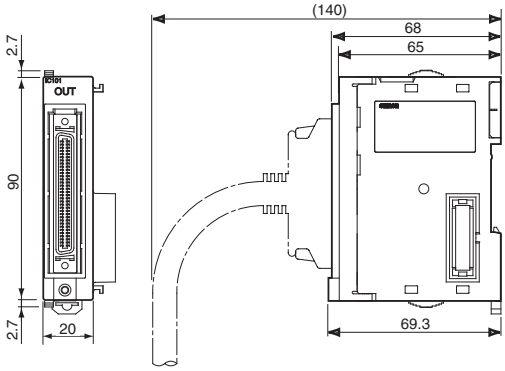

CJ1W-II101
I/O Interface Unit

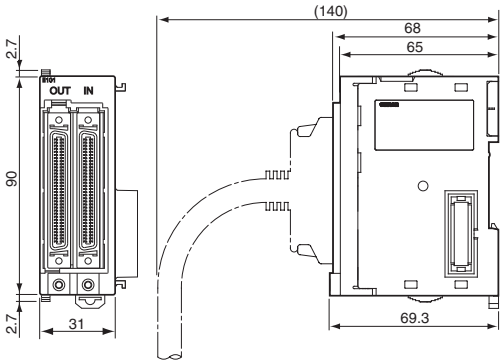

A-3-6 SD Memory Card

Unit: mm

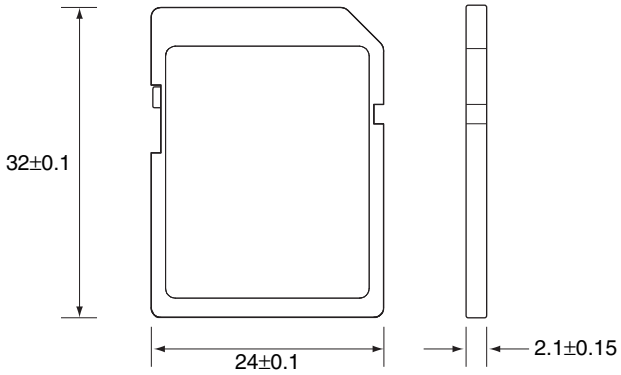

A-4 Load Short-circuit Protection and Line Disconnection Detection for CJ-series Basic I/O Units

A-4-1 Load Short-circuit Protection and Line Disconnection Detection for CJ1W-OD202

This section describes the load short-circuit protection and line disconnection detection of the CJ1W-OD202 Output Units.

As shown below, normally when the output bit (OUT) turns ON, the transistor will turn ON and then output current (Iout) will flow.

Figure 1 Normal Operation

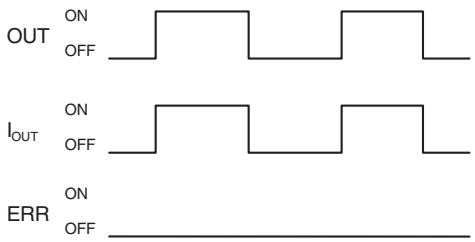

OUT:	Output bit
I_{OUT}:	Output current
ERR:	Alarm output, ERR indicator
I_{lim}:	Short-circuit detection current
I_{OL}:	Disconnection detection current
T_j:	Junction temperature of transistor
T_{std}:	Thermal shutdown temperature
T_r:	Reset temperature

If the output current (Iout) exceeds the detection current (Ilim) when an overload or short-circuit occurs, the output current (Iout) will be limited as shown in figure below. When the junction temperature (Tj) of the output transistor reaches the thermal shutdown temperature (Tstd), the output will turn OFF to protect the transistor from being damaged, and the alarm output bit will turn ON to light the ERR indicator. When the junction temperature (Tj) of the transistor drops down to the reset temperature (Tr), the ERR indicator will be automatically reset and the output current will start flowing.

Figure 2 Operation for Overload or Short Circuit

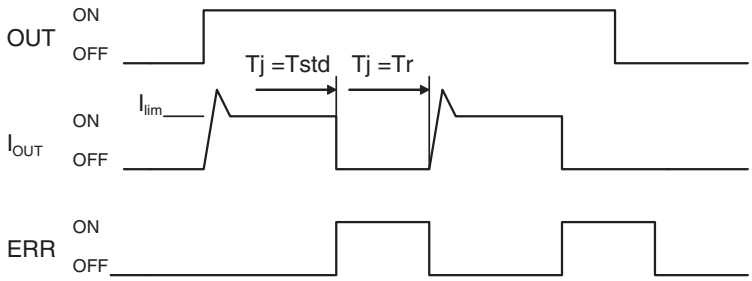

If the line is disconnected and the output current (Iout) drops below the line disconnection detection current (IOL), the ERR indicator will light as shown in the following figure.

Figure 3 Operation for Disconnected Line with Output Current below the Line Disconnection Detection Current

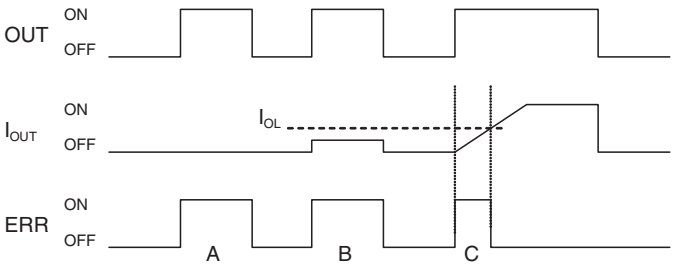

A: Load not connected or load line broken.

B: Current to load at or below line disconnection detection current.

C: Rise of current to load too slow and error detected before the disconnection detection current was reached.

When load L is connected, the ERR indicator may light and the Alarm Output Bit may turn ON for approximately 100 ms. The programming example given in the next section can be used so that an error is not detected in this case.

● Operating Restrictions of CJ1W-OD202

Although the CJ1W-OD202 is provided with load short-circuit protection, these are for protecting internal circuits against momentary short-circuiting in the load. As shown in Figure 2, the load short-circuit protection is automatically released when the Tj equals to Tr. Therefore, unless the cause of short-circuit is removed, ON/OFF operations will be repeated in the output. Leaving short-circuits for any length of time will cause internal temperature rise, deterioration of elements, discoloration of the case or PCBs, etc. Therefore, observe the following restrictions.

● Restrictions

If a short-circuit occurs in an external load, immediately turn OFF the corresponding output and remove the cause. The CJ1W-OD202 turns ON an alarm output bit that corresponds to the external load output number. There is an alarm output bit for every two outputs.

When an alarm output bit turns ON, use a self-holding bit for the alarm in the user program and turn OFF the corresponding output.

The Alarm Output Bits are allocated in the Basic I/O Unit Information Area system-defined variable. Two output bits are assigned for each slot and rack in which a Unit is mounted.

_CJB_IOUnitInfo[*rack_number*,*slot_number*,*serial_number_in_Unit*]

For example, when the CJ1W-OD202 is mounted in slot 0 of rack 0, *_CJB_IOUnitInfo[0,0,0]* changes to TRUE if output *Ch1Out0* changes to TRUE. When the CJ1W-OD202 is mounted in slot 1 of rack 0, *_CJB_IOUnitInfo[0,1,3]* changes to TRUE if output *Ch1Out7* changed to TRUE.

Programming Example

In this example, CJ1W-OD202 is mounted in slot 0 of rack 0.

This example shows how to change output *Jxx_Ch0_Out00* to FALSE immediately if the Alarm Output Bit *_CJB_IOUnitInfo[0,0,0]* changes to TRUE and how to keep the output FALSE until the cause is removed and the bit is reset with *RstOD202*.

To prevent the Alarm Output Bit from changing to TRUE momentarily when the inductive load turns ON, the alarm output is not changed to TRUE for 200 ms after input *En_OD202* changes to TRUE.

Variable	Data type	Initial value	Address	Comment
OutData	BOOL	FALSE		Output data
NG	BOOL	FALSE		TON_OC202 timer output
ResetOD202	BOOL	FALSE		Reset switch
AlarmOut	BOOL	FALSE		Error flag
J01_Ch1_Out00	BOOL		IOBus://rack#0/slot#0/Ch1_Out/Ch1_Out00	OC202 output
_CJB_IOUnitInfo	ARRAY[0..3,0..9, 0..7] OF BOOL			Basic I/O Unit information array

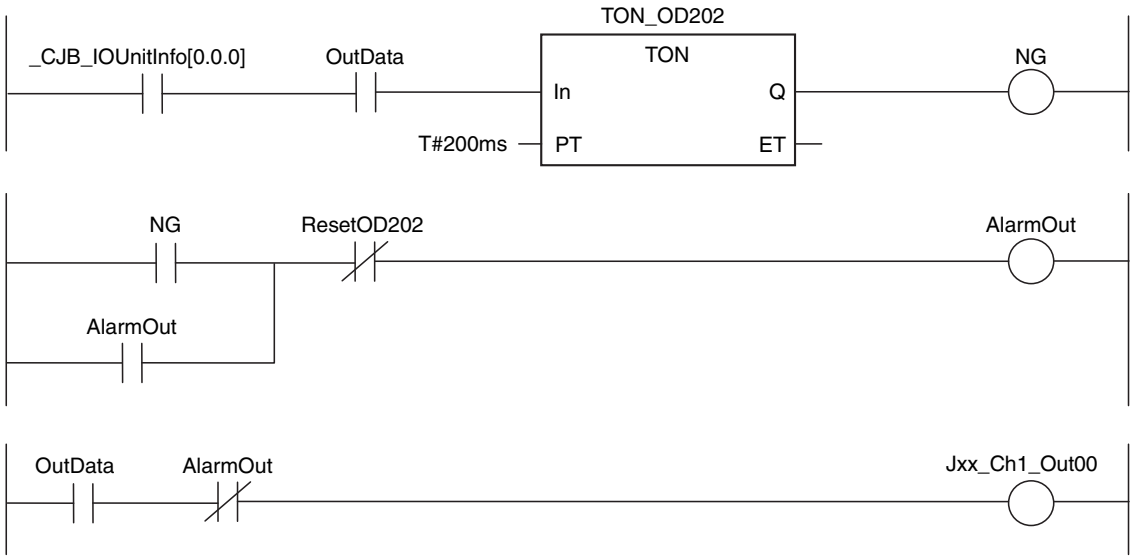

A-4-2 Load Short-circuit Protection for CJ1W-OD204/OD212/OD232/MD232

As shown below, normally when the output bit turns ON (OUT), the transistor will turn ON and then output current (Iout) will flow. If the output current (Iout) exceeds the detection current (Ilim) when an overload or short-circuit occurs, the output current (Iout) will be limited as shown in Figure 2. When the junction temperature (Tj) of the output transistor reaches the thermal shutdown temperature (Tstd), the output will turn OFF to protect the transistor from being damaged, and the alarm output bit will turn ON to light the ERR indicator. When the junction temperature (Tj) of the transistor drops down to the reset temperature (Tr), the ERR indicator will be automatically reset and the output current will start flowing.

Figure 1 Normal Operation

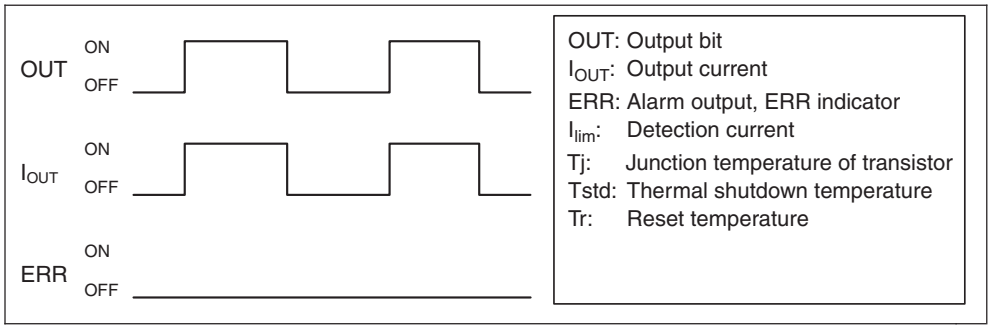

Figure 2 Operation for Overload or Short Circuit

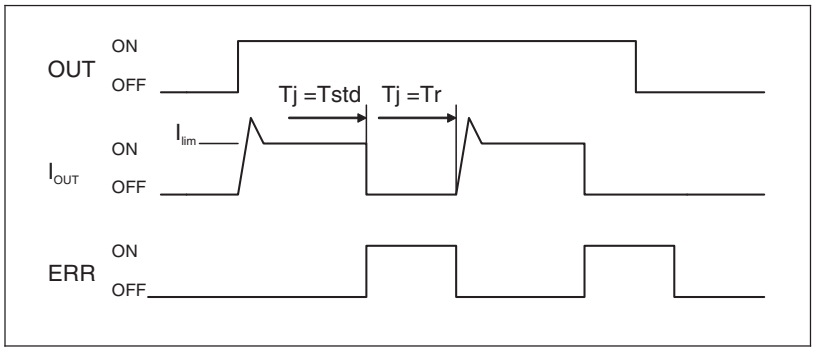

Operating Restrictions for the CJ1W-OD204/OD212/OD232/MD232

Although these Units are provided with load short-circuit protection, these are for protecting internal circuits against momentary short-circuiting in the load. As shown in Figure 2, the load short-circuit protection is automatically released when the Tj equals to Tr. Therefore, unless the cause of short-circuit is removed, ON/OFF operations will be repeated in the output. Leaving short-circuits for any length of time will cause internal temperature rise, deterioration of elements, discoloration of the case or PCBs, etc. Therefore, observe the following restrictions.

Restrictions

If a short-circuit occurs in an external load, immediately turn OFF the corresponding output and remove the cause. An alarm output bit that corresponds to the external load output number is turned ON. There is an alarm output bit for every common.

When an alarm output bit turns ON, use a self-holding bit for the alarm in the user program and turn OFF the corresponding output.

The Alarm Output Bits are allocated in the Basic I/O Unit Information Area system-defined variable. Sixteen output bits are assigned for each slot and rack in which a Unit is mounted.

_CJB_IOUnitInfo[*rack_number*,*slot_number*,*serial_number_in_Unit*]

For example, when the CJ1W-OD212 is mounted in slot 0 of rack 0, *_CJB_IOUnitInfo[0,0,0]* changes to TRUE if output *Ch1Out2* changes to TRUE.
When the CJ1W-OD232 is mounted in slot 1 of rack 2, *_CJB_IOUnitInfo[2,1,1]* changes to TRUE if output *Ch2Out8* changes to TRUE.

A-5 EMC Directive Measures for Relay Outputs

The NJ-series Controllers conform to the Common Emission Standards (EN 61000-6-4 or EN 61131-2) of the EMC Directives. However, noise generated by relay output switching may not satisfy these Standards when the Controller is incorporated into a system. In such a case, a noise filter must be connected to the load side or other appropriate countermeasures must be provided external to the Controller.

Countermeasures taken to satisfy the standards vary depending on the devices on the load side, wiring, configuration of machines, etc. Following are examples of countermeasures for reducing the generated noise.

● Countermeasures

(Refer to EN61000-6-4 for more details.)

Countermeasures are not required if the frequency of load switching for the whole system with the Controller included is less than 5 times per minute.

Countermeasures are required if the frequency of load switching for the whole system with the Controller included is 5 times or more per minute.

● Countermeasure Examples

When switching an inductive load, connect an surge protector, diodes, etc., in parallel with the load or contact as shown below.

Circuit	Current		Characteristic	Required element
	AC	DC		
CR method 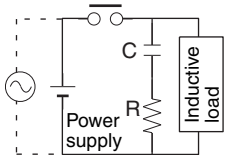	Yes	Yes	If the load is a relay or solenoid, there is a delay in the resetting time. If the supply voltage is 24 or 48 V, insert the surge protector in parallel with the load. If the supply voltage is 100 to 200 V, insert the surge protector between the contacts.	The capacitance of the capacitor should be approx. 1 to 0.5 μF per contact current of 1 A and resistance of the resistor should be approx. 0.5 to 1 Ω per contact voltage of 1 V. These values, however, vary with the load and the characteristics of the relay. Decide these values from experiments, and take into consideration that the capacitance suppresses spark discharge when the contacts are separated and the resistance limits the current that flows into the load when the circuit is closed again. The dielectric strength of the capacitor must be 200 to 300 V. If the circuit is an AC circuit, use a capacitor with no polarity.

Circuit	Current		Characteristic	Required element
	AC	DC		
Diode method 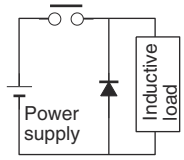	No	Yes	The diode connected in parallel with the load changes energy accumulated by the coil into a current, which then flows into the coil so that the current will be converted into Joule heat by the resistance of the inductive load. This delay in the resetting time, caused by this method is longer than that caused by the CR method.	The reversed dielectric strength value of the diode must be at least 10 times as large as the circuit voltage value. The forward current of the diode must be the same as or larger than the load current. The reversed dielectric strength value of the diode may be two to three times larger than the supply voltage if the surge protector is applied to electronic circuits with low circuit voltages.
Varistor method 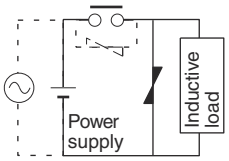	Yes	Yes	The varistor method prevents the imposition of high voltage between the contacts by using the constant voltage characteristic of the varistor. There is a delay in the resetting time. If the supply voltage is 24 or 48 V, insert the varistor in parallel with the load. If the supply voltage is 100 to 200 V, insert the varistor between the contacts.	---

When switching a load with a high inrush current such as an incandescent lamp, suppress the inrush current as shown below.

Countermeasure 1	Countermeasure 2
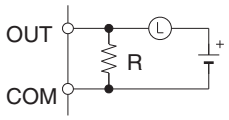	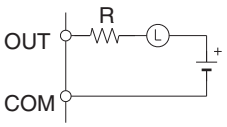
Providing a dark current of approx. one-third of the rated value through an incandescent lamp	Providing a limiting resistor

A-6 System-defined Variables Related to Hardware

System-defined variables are assigned specific functions by the system. They are registered in the global variable table, or the local variable table for each POU, in advance.

The variable names cannot be changed. Some of the variables start with an underbar and some start with "P_".

Some of the system-defined variables are read-only and some are read/write.

You read and write the variables with the user program, with communications from external devices, with the Sysmac Studio, or with an NS-series PT.

The variables are described in the tables of this appendix as shown below.

Variable name	Meaning	Function	Data type	Range of values	Reference
This is the system-defined variable name. The prefix gives the category name.	This is the meaning of the variable.	The function of the variable is described.	The data type of the variable is given.	The range of values that the variable can take is given.	The page of the individual system-defined variable specifications table is given.

A version in parentheses in the Variable name column is the unit version of the CPU Unit when the system-defined variable was added.

The system-defined variables that are related to hardware are listed in the rest of this appendix.

A-6-1 System-defined Variables for the Overall NJ-series Controller (No Category)

● Functional Classification: Clock

Variable name	Meaning	Function	Data type	Range of values	Reference
_CurrentTime	System Time	Contains the CPU Unit's internal clock data.	DATE_ AND_ TIME	DT#1970-01-01-00:00:00 to DT#2106-02-06-23:59:59	page A-112

● Functional Classification: Errors

Variable name	Meaning	Function	Data type	Range of values	Reference
_ErrSta	Controller Error Status	TRUE if there is a Controller error. FALSE if there is no Controller error. **Note** Do not use this variable in the user program. There may be a delay in updating it and concurrency problems in relation to the error status of the function module. Use this variable only to access status through communications from an external device. Refer to information on the meanings of the error status bits at the end of this appendix for details.	WORD	16#0000 to 16#C0F0	page A-113
_AlarmFlag	User-defined Error Status	The bit corresponding to the event level is TRUE while there is a user-defined error. Bits 00 to 07 correspond to user fault levels 1 to 8. This variable contains 0000 hex when there is no user-defined error.	WORD	16#0000 to 16#00FF	page A-113

● Functional Classification: SD Memory Card

Variable name	Meaning	Function	Data type	Range of values	Reference
_Card1Ready	SD Memory Card Ready Flag	TRUE when the SD Memory Card is recognized. FALSE when the SD Memory Card is not recognized. TRUE: The Card can be used. FALSE: The Card cannot be used.	BOOL	TRUE or FALSE	page A-113
_Card1Protect	SD Memory Card Write Protected Flag	TRUE when the SD Memory Card is write-protected with the LOCK switch. TRUE: Write protected. FALSE: Not write protected.	BOOL	TRUE or FALSE	page A-114
_Card1Err	SD Memory Card Error Flag	TRUE when an unusable SD Memory Card is inserted or a format error occurs. TRUE: There is an error FALSE: There is no error	BOOL	TRUE or FALSE	page A-114
_Card1Access	SD Memory Card Access Flag	TRUE during SD Memory Card access. TRUE: Card is being accessed. FALSE: Card is not being accessed. The system updates the flag every 100 ms. Because of this, access to the SD Memory Card is shown by this flag with a delay of up to 100 ms. We therefore do not recommend the use of this variable in the user program.	BOOL	TRUE or FALSE	page A-114
_Card1Deteriorated	SD Memory Card Life Warning Flag	TRUE when the life of the SD Memory Card is exceeded. TRUE: The life of the Card has been exceeded. FALSE: The Card can still be used.	BOOL	TRUE or FALSE	page A-114
_Card1PowerFail	SD Memory Card Power Interruption Flag	TRUE when the power supply to the CPU Unit was interrupted during access to the SD Memory Card. TRUE: Power was interrupted during SD Memory Card access. FALSE: Normal	BOOL	TRUE or FALSE	page A-115

Variable name / Member name	Meaning	Function	Data type	Range of values	Reference
_Card1BkupCmd (Ver.1.03)	SD Memory Card Backup Commands		_sBKUP_CMD		page A-115
ExecBkup	Execute Backup Flag	Change this variable to TRUE to back up Controller data to an SD Memory Card. **Note** You cannot use this system-defined variable in the user program. Use it in CIP message communications when sending a command from an HMI or host computer.	BOOL	TRUE or FALSE	page A-115
CancelBkup	Cancel Backup Flag	Change this variable to TRUE to cancel backing up data to an SD Memory Card. **Note** You cannot use this system-defined variable in the user program. Use it in CIP message communications when sending a command from an HMI or host computer.	BOOL	TRUE or FALSE	page A-115
ExecVefy	Execute Verify Flag	Change this variable to TRUE to compare the Controller data to a backup file in the SD Memory Card. **Note** You cannot use this system-defined variable in the user program. Use it in CIP message communications when sending a command from an HMI or host computer.	BOOL	TRUE or FALSE	page A-115
CancelVefy	Cancel Verify Flag	Change this variable to TRUE to cancel comparing the Controller data to a backup file in the SD Memory Card. **Note** You cannot use this system-defined variable in the user program. Use it in CIP message communications when sending a command from an HMI or host computer.	BOOL	TRUE or FALSE	page A-116
DirName	Directory Name	Used to specify the directory name in the SD Memory Card for which to back up or verify data. **Note** You cannot use this system-defined variable in the user program. Use it in CIP message communications when sending a command from an HMI or host computer.	STRING(64)	Depends on data type.	page A-116

Variable name / Member name	Meaning	Function	Data type	Range of values	Reference
_Card1BkupSta (Ver. 1.03)	SD Memory Card Backup Status		_sBKUP_STA		page A-116
Done	Done Flag	TRUE when a backup is completed. **Note** You cannot use this system-defined variable in the user program. Use it in CIP message communications when sending a command from an HMI or host computer.	BOOL	TRUE or FALSE	page A-116
Active	Active Flag	TRUE when a backup is in progress. **Note** You cannot use this system-defined variable in the user program. Use it in CIP message communications when sending a command from an HMI or host computer.	BOOL	TRUE or FALSE	page A-116
Err	Error Flag	TRUE when processing a backup ended in an error. **Note** You cannot use this system-defined variable in the user program. Use it in CIP message communications when sending a command from an HMI or host computer.	BOOL	TRUE or FALSE	page A-117
_Card1VefySta (Ver. 1.03)	SD Memory Card Verify Status		_sVEFY_STA		page A-117
Done	Done Flag	TRUE when a verification is completed. **Note** You cannot use this system-defined variable in the user program. Use it in CIP message communications when sending a command from an HMI or host computer.	BOOL	TRUE or FALSE	page A-117
Active	Active Flag	TRUE when a verification is in progress. **Note** You cannot use this system-defined variable in the user program. Use it in CIP message communications when sending a command from an HMI or host computer.	BOOL	TRUE or FALSE	page A-117
VefyRslt	Verify Result Flag	TRUE if the data was the same. FALSE if differences were found. **Note** You cannot use this system-defined variable in the user program. Use it in CIP message communications when sending a command from an HMI or host computer.	BOOL	TRUE or FALSE	page A-117
Err	Error Flag	TRUE when processing a verification ended in an error. **Note** You cannot use this system-defined variable in the user program. Use it in CIP message communications when sending a command from an HMI or host computer.	BOOL	TRUE or FALSE	page A-118

● Functional Classification: Backup

Variable name	Meaning	Function	Data type	Range of values	Reference
_BackupBusy (Ver. 1.03)	Backup Function Busy Flag	TRUE when a backup, restoration, or verification is in progress.	BOOL	TRUE or FALSE	page A-118

● Functional Classification: Power Supply

Variable name	Meaning	Function	Data type	Range of values	Reference
_PowerOnHour	Total Power ON Time	Contains the total time that the power has been ON. Contains the total time that the CPU Unit has been ON in 1-hour increments. To reset this value, overwrite the current value with 0. The value is not updated after it reaches 4294967295. This variable is not initialized at startup.	UDINT	0 to 4294967295	page A-118
_PowerOnCount	Power Interruption Count	Contains the number of times that the power supply has been interrupted. The value is incremented by 1 each time the power supply is interrupted after the first time that the power was turned ON. To reset this value, overwrite the current value with 0. The value is not updated after it reaches 4294967295. This variable is not initialized at startup.	UDINT	0 to 4294967295	page A-118
_RetainFail	Retention Failure Flag	TRUE at the following time (failure of retention during power interruptions). • When an error is detected in the battery-backup memory check at startup. FALSE at the following times (no failure of retention during power interruptions). • When no error is detected in the battery-backup memory check at startup. • When the user program is downloaded. • When the Clear All Memory operation is performed. **Note** When the encoder home offset data is not retained, the status is given in the error status of the axis variable, and not in this flag.	BOOL	TRUE or FALSE	page A-119

● Functional Classification: Power Supply

Variable name	Meaning	Function	Data type	Range of values	Reference
_PowerOnHour	Total Power ON Time	Contains the total time that the power has been ON. Contains the total time that the CPU Unit has been ON in 1-hour increments. To reset this value, overwrite the current value with 0. The value is not updated after it reaches 4294967295. This variable is not initialized at startup.	UDINT	0 to 4294967295	page A-118
_PowerOnCount	Power Interruption Count	Contains the number of times that the power supply has been interrupted. The value is incremented by 1 each time the power supply is interrupted after the first time that the power was turned ON. To reset this value, overwrite the current value with 0. The value is not updated after it reaches 4294967295. This variable is not initialized at startup.	UDINT	0 to 4294967295	page A-118
_RetainFail	Retention Failure Flag	TRUE at the following time (failure of retention during power interruptions). • When an error is detected in the battery-backup memory check at startup. FALSE at the following times (no failure of retention during power interruptions). • When no error is detected in the battery-backup memory check at startup. • When the user program is downloaded. • When the Clear All Memory operation is performed. **Note** When the encoder home offset data is not retained, the status is given in the error status of the axis variable, and not in this flag.	BOOL	TRUE or FALSE	page A-119

● Functional Classification: Version

Variable name	Meaning	Function	Data type	Range of values	Reference
_UnitVersion (Ver.1.08)	Unit Version	The unit version of the CPU Unit is stored. The integer part of the unit version is stored in element number 0. The fractional part of the unit version is stored in element number 1. Example 1) If the unit version is 1.08, “1” is stored in element number 0 and “8” is stored in element number 1. Example 2) If the unit version is 1.10, “1” is stored in element number 0 and “10” is stored in element number 1.	ARRAY[0..1] OF USINT	0 to 99	page A-119

A-6-2 PLC Function Module, Category Name: _PLC

● Functional Classification: Errors

Variable name	Meaning	Function	Data type	Range of values	Reference
_PLC_ErrSta	PLC Function Module Error Status	TRUE when there is a Controller error that involves the PLC Function Module. FALSE when there is no Controller error that involves the PLC Function Module. Refer to information on the meanings of the error status bits at the end of this appendix for details.	WORD	16#0000 to 16#00F0	page A-119

A-6-3 PLC Function Module, Category Name: _CJB

● Functional Classification: I/O Bus Status

Variable name	Meaning	Function	Data type	Range of values	Reference
_CJB_MaxRackNo	Largest Rack Number	Contains the largest rack number of the Expansion Racks that are detected by the Controller.	UINT	0 to 3 0: Only CPU Rack.	page A-120
_CJB_MaxSlotNo	Largest Slot Number	Contains one higher than the largest slot number with a CJ-series Unit on each of the Racks that are detected by the Controller.	ARRAY [0..3] OF UINT	0 to 10 0: No CJ-series Unit mounted.	page A-120

● Functional Classification: I/O Bus Errors

Variable name	Meaning	Function	Data type	Range of values	Reference
_CJB_ErrSta	I/O Bus Error Status	Gives the I/O bus error status. **Note** Do not use this variable in the user program. There may be a delay in updating it. Use this variable only to access status through communications from an external device. Refer to information on the meanings of the error status bits at the end of this appendix for details.	WORD	16#0000 to 16#C0F0	page A-120
_CJB_MstrErrSta	I/O Bus Master Error Status	Gives the I/O bus master error status. **Note** Do not use this variable in the user program. There may be a delay in updating it. Use this variable only to access status through communications from an external device. Refer to information on the meanings of the error status bits at the end of this appendix for details.	WORD	16#0000 to 16#00F0	page A-120
_CJB_UnitErrSta	I/O Bus Unit Error Status	Gives the error status of the I/O Bus Unit. **Note** Do not use this variable in the user program. There may be a delay in updating it. Use this variable only to access status through communications from an external device. Refer to information on the meanings of the error status bits at the end of this appendix for details.	ARRAY [0..3, 0..9] OF WORD	16#0000 to 16#80F0	page A-121
_CJB_InRespTm	Basic Input Unit Input Response Times	Contains the response times of the Basic Input Units.	ARRAY [0..3, 0..9] OF UNIT	0 to 320	page A-121

● Functional Classification: Auxiliary Area Bits for CJ-series Units

Variable name	Meaning	Function	Data type	Range of values	Reference
_CJB_IOUnitInfo	Basic I/O Unit Information	Shows the status of the Basic I/O Unit alarm output (load short-circuit protection). TRUE: Load short-circuit FALSE: No load short-circuit	ARRAY [0..3, 0..9, 0..7] OF BOOL	TRUE or FALSE	page A-121
_CJB_CBU00InitSta to _CJB_CBU15InitSta	CPU Bus Unit Initializing Flags	The corresponding variable is TRUE during initialization of the CPU Bus Unit. The corresponding variable changes to FALSE when the initialization is completed. The numbers in the variables indicate the unit numbers of the applicable Units.	BOOL	TRUE or FALSE	page A-121
_CJB_SIO00InitSta to _CJB_SIO95InitSta	Special I/O Unit Initializing Flags	The corresponding variable is TRUE during initialization of the Special I/O Unit. The corresponding variable changes to FALSE when the initialization is completed. The numbers in the variables indicate the unit numbers of the applicable Units.	BOOL	TRUE or FALSE	page A-122
_CJB_CBU00Restart to _CJB_CBU15Restart	CPU Bus Unit Restart Bits	The CPU Bus Unit is restarted when the corresponding variable changes to TRUE. (It is changed to FALSE by the system after the CPU Bus Unit is restarted.) The numbers in the variables indicate the unit numbers of the applicable Units. If you change the Restart Flag to TRUE with an instruction, the restart process begins from refresh processing in the next task period.	BOOL	TRUE or FALSE	page A-122
_CJB_SIO00Restart to _CJB_SIO95Restart	Special I/O Unit Restart Bits	The Special I/O Unit is restarted when the corresponding variable changes to TRUE. (It is changed to FALSE by the system after the Special I/O Unit is restarted.) The numbers in the variables indicate the unit numbers of the applicable Units. If you change the Restart Flag to TRUE with an instruction, the restart process begins from refresh processing in the next task period.	BOOL	TRUE or FALSE	page A-122
_CJB_SCU00P1ChgSta to _CJB_SCU00P2ChgSta	Serial Communications Unit 0, Port 1/2 Settings Changing Flags	TRUE when the parameters of the specified port are being changed. TRUE when the Change Serial Communications Parameter (SerialSetup) instruction is being executed. FALSE after the parameters are changed. It is also possible for the user to indicate a change in serial port settings by turning ON the corresponding flag through the execution of an instruction or a user operation.	BOOL	TRUE or FALSE	page A-123
_CJB_SCU15P1ChgSta to _CJB_SCU15P2ChgSta	Serial Communications Units 1 to 15, Port 1/2 Settings Changing Flags		BOOL	TRUE or FALSE	page A-123

Note All of the system-defined variables for EtherCAT communications status show the current status.

A-6-4 Meanings of Error Status Bits

The meanings of the individual bits in the following error status are the same.

- *_ErrSta* (Controller Error Status)
- *_PLC_ErrSta* (PLC Function Module Error Status)
- *_CJB_ErrSta* (I/O Bus Error Status)
- *_CJB_MstrErrSta* (I/O Bus Master Error Status)
- *_CJB_UnitErrSta* (I/O Bus Unit Error Status)

The meaning of the bits are shown in the following table.
However, do not use the following variables in the user program:*_ErrSta* (Controller Error Status), *_CJB_ErrSta* (I/O Bus Error Status), *_CJB_MstrErrSta* (I/O Bus Master Error Status), and *_CJB_UnitErrSta* (I/O Bus Master Unit Status). There may be a delay in updating them and concurrency problems in relation to the error status of the function module.

Use these variables only to access status through communications from an external device.

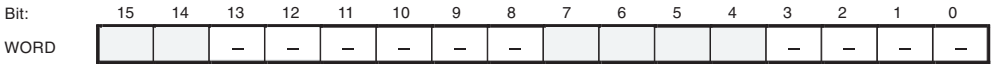

Bit	Meaning
15	Master-detected error: This bit indicates whether the master detected a Controller error in the Unit/slave for the error status of the Controller error. TRUE: The master detected a Controller error. FALSE: The master has not detected a Controller error. (Valid for *_CJB_U_ErrSta* and *_EC_SlvErrTbl*.)
14	Collective slave error status: This bit indicates if a Controller error was detected for levels (e.g., a Unit, slave, axis, or axes group) that are lower than the event source (i.e., for a function module). TRUE: A Controller error has occurred at a lower level. FALSE: A Controller error has not occurred at a lower level. (Valid for *_CJB_ErrSta, _MC_ErrSta,* and *_EC_ErrSta*.)
8 to 13	Reserved.
7	This bit indicates whether a major fault level Controller error has occurred. TRUE: A major fault level Controller error has occurred. FALSE: A major fault level Controller error has not occurred.
6	This bit indicates whether a partial fault level Controller error has occurred. TRUE: A partial fault level Controller error has occurred. FALSE: A partial fault level Controller error has not occurred.
5	This bit indicates whether a minor fault level Controller error has occurred. TRUE: A minor fault level Controller error has occurred. FALSE: A minor fault level Controller error has not occurred.
4	This bit indicates whether an observation level Controller error has occurred. TRUE: An observation level Controller error has occurred. FALSE: An observation level Controller error has not occurred.
0 to 3	Reserved.

A-7 Specifications for Individual System-defined Variables

The specifications for each system-defined variable are given as described below.

Variable name	This is the system-defined variable name. The prefix gives the category name.			Members (for structure variables)	The member names are given for structure variables only.
Meaning	This is the meaning of the variable.			Global/local	Global: Global variable, Local: Local variable
Function	The function of the variable is described.				
Data type	The data type of the variable is given.			Range of values	The range of values that the variable can take is given.
R/W access	R: Read only, RW: Read/write	Retained	The Retain attribute of the variable is given.	Network Publish	The Network Publish attribute of the variable is given.
Usage in user program	Whether you can use the variable directly in the user program is specified.	Related instructions	The instructions that are related to the variable are given. If you cannot use the variable directly in the user program, the instructions that access the variable are given.		

The rest of this appendix gives the specifications of each system-defined variable that is related to hardware.

A-7-1 System-defined Variables for the Overall NJ-series Controller (No Category)

● Functional Classification: Clock

Variable name	_CurrentTime				
Meaning	System Time			Global/local	Global
Function	This variable contains the CPU Unit's internal clock data.				
Data type	DATE_AND_TIME			Range of values	DT#1970-01-01-00:00:00 to DT#2106-02-06-23:59:59
R/W access	R	Retained	Not retained.	Network Publish	Published.
Usage in user program	Possible.	Related instructions	Clock instructions		

● Functional Classification: Errors

Variable name	_ErrSta				
Meaning	Controller Error Status			Global/local	Global
Function	TRUE if there is a Controller error. FALSE if there is no Controller error. **Note** Do not use this variable in the user program. There may be a delay in updating it and concurrency problems in relation to the status of the function module. Use this variable only to access status through communications from an external device. Refer to *A-6-4 Meanings of Error Status Bits* for the meanings of the error status bits.				
Data type	WORD			Range of values	16#0000 to 16#C0F0
R/W access	R	Retained	Not retained.	Network Publish	Published.
Usage in user program	Not possible.	Related instructions	• ResetPLCError • ResetCJBError • ResetECError • ResetMCError • MC_Reset • MC_GroupReset You can access this variable from the user program only with the following instructions. • GetPLCError • GetCJBError • GetECError • GetMCError • GetEIPError		

Variable name	_AlarmFlag				
Meaning	User-defined Error Status			Global/local	Global
Function	The bit corresponding to the event level is TRUE while there is a user-defined error. Bits 00 to 07 correspond to user fault levels 1 to 8. This variable contains 0000 hex when there is no user-defined error.				
Data type	WORD			Range of values	16#0000 to 16#00FF
R/W access	R	Retained	Not retained.	Network Publish	Published.
Usage in user program	Possible.	Related instructions	• SetAlarm • ResetAlarm • GetAlarm		

● Functional Classification: SD Memory Card

Variable name	_Card1Ready				
Meaning	SD Memory Card Ready Flag			Global/local	Global
Function	TRUE when the SD Memory Card is recognized. FALSE when an SD Memory Card is not recognized. TRUE: The Card can be used. FALSE: The Card cannot be used.				
Data type	BOOL			Range of values	TRUE or FALSE
R/W access	R	Retained	Retained.	Network Publish	Published.
Usage in user program	Possible.	Related instructions	---		

Variable name	_Card1Protect				
Meaning	SD Memory Card Write Protected Flag			Global/local	Global
Function	TRUE when the SD Memory Card is write-protected with the LOCK switch. TRUE: Write protected. FALSE: Not write protected.				
Data type	BOOL			Range of values	TRUE or FALSE
R/W access	R	Retained	Retained.	Network Publish	Published.
Usage in user program	Possible.	Related instructions	---		

Variable name	_Card1Err				
Meaning	SD Memory Card Error Flag			Global/local	Global
Function	TRUE when an unusable SD Memory Card is inserted or a format error occurs. TRUE: There is an error FALSE: There is no error				
Data type	BOOL			Range of values	TRUE or FALSE
R/W access	R	Retained	Retained.	Network Publish	Published.
Usage in user program	Possible.	Related instructions	---		

Variable name	_Card1Access				
Meaning	SD Memory Card Access Flag			Global/local	Global
Function	TRUE during SD Memory Card access. TRUE: Card is being accessed. FALSE: Card is not being accessed. The system updates the flag every 100 ms. Because of this, access to the SD Memory Card is shown by this flag with a delay of up to 100 ms. We therefore do not recommend the use of this variable in the user program.				
Data type	BOOL			Range of values	TRUE or FALSE
R/W access	R	Retained	Retained.	Network Publish	Published.
Usage in user program	Possible.	Related instructions	---		

Variable name	_Card1Deteriorated				
Meaning	SD Memory Card Life Warning Flag			Global/local	Global
Function	TRUE when the life of the SD Memory Card is exceeded. If this variable changed to TRUE, replace the SD Memory Card. Read/write operation may fail if the SD Memory Card is not replaced. TRUE: The life of the Card has been exceeded. FALSE: The Card can still be used.				
Data type	BOOL			Range of values	TRUE or FALSE
R/W access	R	Retained	Retained.	Network Publish	Published.
Usage in user program	Possible.	Related instructions	---		

Variable name	_Card1PowerFail				
Meaning	SD Memory Card Power Interruption Flag			Global/local	Global
Function	TRUE when the power supply to the CPU Unit was interrupted during access to the SD Memory Card. TRUE: Power was interrupted during SD Memory Card access. FALSE: Normal.				
Data type	BOOL			Range of values	TRUE or FALSE
R/W access	RW	Retained	Retained.	Network Publish	Published.
Usage in user program	Possible.	Related instructions	---		

Variable name	_Card1BkupCmd*1			Member name	.ExecBkup
Meaning	Execute Backup Flag			Global/local	Global
Function	Change this variable to TRUE to back up Controller data to an SD Memory Card. **Note** You cannot use this system-defined variable in the user program. Use it in CIP message communications when sending a command from an HMI or host computer.				
Data type	Structure: _sBKUP_CMD, Member: BOOL			Range of values	TRUE or FALSE
R/W access	R/W	Retained	Not retained.	Network Publish	Published.
Usage in user program	Not possible.	Related instructions	---		

*1 This system-defined variable was added for unit version 1.03 of the CPU Unit.

Variable name	_Card1BkupCmd*1			Member name	.CancelBkup
Meaning	Cancel Backup Flag			Global/local	Global
Function	Change this variable to TRUE to cancel backing up data to an SD Memory Card. **Note** You cannot use this system-defined variable in the user program. Use it in CIP message communications when sending a command from an HMI or host computer.				
Data type	Structure: _sBKUP_CMD, Member: BOOL			Range of values	TRUE or FALSE
R/W access	R/W	Retained	Not retained.	Network Publish	Published.
Usage in user program	Not possible.	Related instructions	---		

*1 This system-defined variable was added for unit version 1.03 of the CPU Unit.

Variable name	_Card1BkupCmd*1			Member name	.ExecVefy
Meaning	Execute Verify Flag			Global/local	Global
Function	Change this variable to TRUE to compare the Controller data to a backup file in the SD Memory Card. **Note** You cannot use this system-defined variable in the user program. Use it in CIP message communications when sending a command from an HMI or host computer.				
Data type	Structure: _sBKUP_CMD, Member: BOOL			Range of values	TRUE or FALSE
R/W access	R/W	Retained	Not retained.	Network Publish	Published.
Usage in user program	Not possible.	Related instructions	---		

*1 This system-defined variable was added for unit version 1.03 of the CPU Unit.

Variable name	_Card1BkupCmd*1			Member name	.CancelVefy
Meaning	Cancel Verify Flag			Global/local	Global
Function	Change this variable to TRUE to cancel comparing the Controller data to a backup file in the SD Memory Card. **Note** You cannot use this system-defined variable in the user program. Use it in CIP message communications when sending a command from an HMI or host computer.				
Data type	Structure: _sBKUP_CMD, Member: BOOL			Range of values	TRUE or FALSE
R/W access	R/W	Retained	Not retained.	Network Publish	Published.
Usage in user program	Not possible.	Related instructions	---		

*1 This system-defined variable was added for unit version 1.03 of the CPU Unit.

Variable name	_Card1BkupCmd*1			Member name	.DirName
Meaning	Directory Name			Global/local	Global
Function	Used to specify the directory name in the SD Memory Card for which to back up data. **Note** You cannot use this system-defined variable in the user program. Use it in CIP message communications when sending a command from an HMI or host computer.				
Data type	Structure: _sBKUP_CMD, Member: STRING(64)			Range of values	Depends on data type.
R/W access	R/W	Retained	Not retained.	Network Publish	Published.
Usage in user program	Not possible.	Related instructions	---		

*1 This system-defined variable was added for unit version 1.03 of the CPU Unit.

Variable name	_Card1BkupSta*1			Member name	.Done
Meaning	Done Flag			Global/local	Global
Function	TRUE when a backup is completed. **Note** You cannot use this system-defined variable in the user program. Use it in CIP message communications to read the status from an HMI or host computer.				
Data type	Structure: _sBKUP_STA, Member: BOOL			Range of values	TRUE or FALSE
R/W access	Read	Retained	Not retained.	Network Publish	Published.
Usage in user program	Not possible.	Related instructions	---		

*1 This system-defined variable was added for unit version 1.03 of the CPU Unit.

Variable name	_Card1BkupSta*1			Member name	.Active
Meaning	Active Flag			Global/local	Global
Function	TRUE when a backup is in progress. **Note** You cannot use this system-defined variable in the user program. Use it in CIP message communications to read the status from an HMI or host computer.				
Data type	Structure: _sBKUP_STA, Member: BOOL			Range of values	TRUE or FALSE
R/W access	Read	Retained	Not retained.	Network Publish	Published.
Usage in user program	Not possible.	Related instructions	---		

*1 This system-defined variable was added for unit version 1.03 of the CPU Unit.

Variable name	_Card1BkupSta*1			Member name	.Err
Meaning	Error Flag			Global/local	Global
Function	TRUE when processing a backup ended in an error. **Note** You cannot use this system-defined variable in the user program. Use it in CIP message communications to read the status from an HMI or host computer.				
Data type	Structure: _sBKUP_STA, Member: BOOL			Range of values	TRUE or FALSE
R/W access	Read	Retained	Not retained.	Network Publish	Published.
Usage in user program	Not possible.	Related instructions	---		

*1 This system-defined variable was added for unit version 1.03 of the CPU Unit.

Variable name	_Card1VefySta*1			Member name	.Done
Meaning	Done Flag			Global/local	Global
Function	TRUE when a verification is completed. **Note** You cannot use this system-defined variable in the user program. Use it in CIP message communications to read the status from an HMI or host computer.				
Data type	Structure: _sVEFY_STA, Member: BOOL			Range of values	TRUE or FALSE
R/W access	Read	Retained	Not retained.	Network Publish	Published.
Usage in user program	Not possible.	Related instructions	---		

*1 This system-defined variable was added for unit version 1.03 of the CPU Unit.

Variable name	_Card1VefySta*1			Member name	.Active
Meaning	Active Flag			Global/local	Global
Function	TRUE when a verification is in progress. **Note** You cannot use this system-defined variable in the user program. Use it in CIP message communications to read the status from an HMI or host computer.				
Data type	Structure: _sVEFY_STA, Member: BOOL			Range of values	TRUE or FALSE
R/W access	Read	Retained	Not retained.	Network Publish	Published.
Usage in user program	Not possible.	Related instructions	---		

*1 This system-defined variable was added for unit version 1.03 of the CPU Unit.

Variable name	_Card1VefySta*1			Member name	.VefyRslt
Meaning	Verify Result Flag			Global/local	Global
Function	TRUE if the data was the same. FALSE if differences were found. **Note** You cannot use this system-defined variable in the user program. Use it in CIP message communications to read the status from an HMI or host computer.				
Data type	Structure: _sVEFY_STA, Member: BOOL			Range of values	TRUE or FALSE
R/W access	Read	Retained	Not retained.	Network Publish	Published.
Usage in user program	Not possible.	Related instructions	---		

*1 This system-defined variable was added for unit version 1.03 of the CPU Unit.

Variable name	_Card1VefySta*1			Member name	.Err
Meaning	Error Flag			Global/local	Global
Function	TRUE when processing a verification ended in an error. **Note** You cannot use this system-defined variable in the user program. Use it in CIP message communications to read the status from an HMI or host computer.				
Data type	Structure: _sVEFY_STA, Member: BOOL			Range of values	TRUE or FALSE
R/W access	Read	Retained	Not retained.	Network Publish	Published.
Usage in user program	Not possible.	Related instructions	---		

*1 This system-defined variable was added for unit version 1.03 of the CPU Unit.

● Functional Classification: Backup

Variable name	_BackupBusy*1				
Meaning	Backup Function Busy Flag			Global/local	Global
Function	TRUE when a backup, restoration, or verification is in progress.				
Data type	BOOL			Range of values	TRUE or FALSE
R/W access	Read	Retained	Not retained.	Network Publish	Published.
Usage in user program	Possible.	Related instructions	---		

*1 This system-defined variable was added for unit version 1.03 of the CPU Unit.

● Functional Classification: Power Supply

Variable name	_PowerOnHour				
Meaning	Total Power ON Time			Global/local	Global
Function	Contains the total time that the power has been ON. Contains the total time that the CPU Unit has been ON in 1-hour increments. To reset this value, overwrite the current value with 0. The value is not updated after it reaches 4294967295. This variable is not initialized at startup.				
Data type	UDINT			Range of values	0 to 4294967295
R/W access	RW	Retained	Retained.	Network Publish	Published.
Usage in user program	Possible.	Related instructions	---		

Variable name	_PowerOnCount				
Meaning	Power Interruption Count			Global/local	Global
Function	Contains the number of times that the power supply has been interrupted. The value is incremented by 1 each time the power supply is interrupted after the first time that the power was turned ON. To reset this value, overwrite the current value with 0. The value is not updated after it reaches 4294967295. This variable is not initialized at startup.				
Data type	UDINT			Range of values	0 to 4294967295
R/W access	R/W	Retained	Retained.	Network Publish	Published.
Usage in user program	Possible.	Related instructions	---		

Variable name	_RetainFail				
Meaning	Retention Failure Flag			Global/local	Global
Function	TRUE at the following times (failure of retention during power interruptions). • When an error is detected in the battery-backup memory check at startup. FALSE at the following times (no failure of retention during power interruptions). • When no error is detected in the battery-backup memory check at startup. • When the user program is downloaded. • When the Clear All Memory operation is performed. **Note** When the encoder home offset data is not retained, the status is given in the error status of the axis variable, and not in this flag.				
Data type	BOOL			Range of values	TRUE or FALSE
R/W access	R	Retained	Not retained.	Network Publish	Not published.
Usage in user program	Possible.	Related instructions	---		

● Functional Classification: Version

Variable name	_UnitVersion*1				
Meaning	Unit Version			Global/local	Global
Function	The unit version of the CPU Unit is stored. The integer part of the unit version is stored in element number 0. The fractional part of the unit version is stored in element number 1. Example 1) If the unit version is 1.08, “1” is stored in element number 0 and “8” is stored in element number 1. Example 2) If the unit version is 1.10, “1” is stored in element number 0 and “10” is stored in element number 1.				
Data type	ARRAY[0..1] OF USINT			Range of values	0 to 99
R/W access	R	Retained	Not retained.	Network Publish	Published.
Usage in user program	Possible.	Related instructions	---		

*1 This system-defined variable was added for unit version 1.08 of the CPU Unit.

A-7-2 PLC Function Module, Category Name: _PLC

● Functional Classification: Errors

Variable name	_PLC_ErrSta				
Meaning	PLC Function Module Error Status			Global/local	Global
Function	TRUE when there is a Controller error that involves the PLC Function Module. FALSE when there is no Controller error that involves the PLC Function Module. Refer to *A-6-4 Meanings of Error Status Bits* for the meanings of the error status bits.				
Data type	WORD			Range of values	16#0000 to 16#00F0
R/W access	R	Retained	Not retained.	Network Publish	Published.
Usage in user program	Possible.	Related instructions	• GetPLCError You can use the following instruction to clear this variable. • ResetPLCError		

A-7-3 PLC Function Module, Category Name: _CJB

● Functional Classification: I/O Bus Status

Variable name	_CJB_MaxRackNo				
Meaning	Largest Rack Number			Global/local	Global
Function	Contains the largest rack number of the Expansion Racks that are detected by the Controller.				
Data type	UINT			Range of values	0 to 3 0: Only CPU Rack.
R/W access	R	Retained	Not retained.	Network Publish	Published.
Usage in user program	Possible.	Related instructions	---		

Variable name	_CJB_MaxSlotNo				
Meaning	Largest Slot Number			Global/local	Global
Function	Contains one higher than the largest slot number with a CJ-series Unit on each of the Racks that are detected by the Controller.				
Data type	ARRAY [0..3] OF UINT			Range of values	0 to 10 0: No CJ-series Unit mounted.
R/W access	R	Retained	Not retained.	Network Publish	Published.
Usage in user program	Possible.	Related instructions	---		

● Functional Classification: I/O Bus Errors

Variable name	_CJB_ErrSta				
Meaning	I/O Bus Error Status			Global/local	Global
Function	Gives the I/O bus error status. **Note** Do not use this variable in the user program. There may be a delay in updating it and concurrency problems may occur. Use this variable only to access status through communications from an external device. Refer to *A-6-4 Meanings of Error Status Bits* for the meanings of the error status bits.				
Data type	WORD			Range of values	16#0000 to 16#00F0
R/W access	R	Retained	Not retained.	Network Publish	Published.
Usage in user program	Not possible.	Related instructions	You can access this variable from the user program only with the following instruction. • GetCJBError You can use the following instruction to clear this variable. • ResetCJBError		

Variable name	_CJB_MstrErrSta				
Meaning	I/O Bus Master Error Status			Global/local	Global
Function	Gives the I/O bus master error status. **Note** Do not use this variable in the user program. There may be a delay in updating it and concurrency problems may occur. Use these variables only to access status through communications from an external device. Refer to *A-6-4 Meanings of Error Status Bits* for the meanings of the error status bits.				
Data type	WORD			Range of values	16#0000 to 16#00F0
R/W access	R	Retained	Not retained.	Network Publish	Published.
Usage in user program	Not possible.	Related instructions	You can access this variable from the user program only with the following instruction. • GetCJBError You can use the following instruction to clear this variable. • ResetCJBError		

Variable name	_CJB_UnitErrSta				
Meaning	I/O Bus Unit Error Status			Global/local	Global
Function	Gives the error status of the I/O Bus Unit. **Note** Do not use this variable in the user program. There may be a delay in updating it and concurrency problems may occur. Use this variable only to access status through communications from an external device. Refer to *A-6-4 Meanings of Error Status Bits* for the meanings of the error status bits.				
Data type	ARRAY [0..3, 0..9] OF WORD			Range of values	16#0000 to 16#80F0
R/W access	R	Retained	Not retained.	Network Publish	Published.
Usage in user program	Not possible.	Related instructions	You can access this variable from the user program only with the following instruction. • GetCJBError You can clear this variable with the following instruction. • ResetCJBError		

Variable name	_CJB_InRespTm				
Meaning	Basic Input Unit Input Response Times			Global/local	Global
Function	Contains the response times of the Basic I/O Units.				
Data type	ARRAY [0..3, 0..9] OF UINT			Range of values	0 to 320
R/W access	R	Retained	Not retained.	Network Publish	Published.
Usage in user program	Possible.	Related instructions	---		

● Functional Classification: Auxiliary Area Bits for CJ-series Units

Variable name		_CJB_IOUnitInfo				
Meaning		Basic I/O Unit Information			Global/local	Global
Function		Shows the status of the Basic I/O Unit alarm output (load short-circuit protection). TRUE: Load short-circuit FALSE: No load short-circuit				
Data type		ARRAY [0..3, 0..9, 0..7] OF BOOL			Range of values	TRUE or FALSE
R/W access		R	Retained	Not retained.	Network Publish	Not published.
Usage in user program		Possible.	Related instructions	---		
Auxiliary Area addresses	Words	A50 to A69				
	Bits	A50.00 to A69.15				

Variable name		_CJB_CBU00InitSta to _CJB_CBU15InitSta				
Meaning		CPU Bus Unit Initializing Flags			Global/local	Global
Function		The corresponding variable is TRUE during initialization of the CPU Bus Unit. The corresponding variable changes to FALSE when the initialization is completed. The numbers in the variables indicate the unit numbers of the applicable Units.				
Data type		BOOL			Range of values	TRUE or FALSE
R/W access		R	Retained	Not retained.	Network Publish	Published.
Usage in user program		Possible.	Related instructions	• ResetUnit		
Auxiliary Area addresses	Words	A302				
	Bits	A302.00 to A302.15				

Variable name		_CJB_SIO00InitSta to _CJB_SIO95InitSta				
Meaning		Special I/O Unit Initializing Flags			Global/local	Global
Function		The corresponding variable is TRUE during initialization of the Special I/O Unit. The corresponding variable changes to FALSE when the initialization is completed. The numbers in the variables indicate the unit numbers of the applicable Units.				
Data type		BOOL			Range of values	TRUE or FALSE
R/W access		R	Retained	Not retained.	Network Publish	Published.
Usage in user program		Possible.	Related instructions	• ResetUnit		
Auxiliary Area addresses	Words	A330 to A335				
	Bits	A330.00 to A335.15				

Variable name		_CJB_CBU00Restart to _CJB_CBU15Restart				
Meaning		CPU Bus Unit Restart Bits			Global/local	Global
Function		The CPU Bus Unit is restarted when the corresponding variable changes to TRUE. (It is changed to FALSE by the system after the CPU Bus Unit is restarted.) The numbers in the variables indicate the unit numbers of the applicable Units. If you change the Restart Flag to TRUE with an instruction, the restart process begins from refresh processing in the next task period.				
Data type		BOOL			Range of values	TRUE or FALSE
R/W access		RW	Retained	Not retained.	Network Publish	Published.
Usage in user program		Possible.	Related instructions	• ResetUnit		
Auxiliary Area addresses	Words	A501				
	Bits	A501.00 to A501.15				

Variable name		_CJB_SIO00Restart to _CJB_SIO95Restart				
Meaning		Special I/O Unit Restart Bits			Global/local	Global
Function		The Special I/O Unit is restarted when the corresponding variable changes to TRUE. (It is changed to FALSE by the system after the CPU Bus Unit is restarted.) The numbers in the variables indicate the unit numbers of the applicable Units. If you change the Restart Flag to TRUE with an instruction, the restart process begins from refresh processing in the next task period.				
Data type		BOOL			Range of values	TRUE or FALSE
R/W access		RW	Retained	Not retained.	Network Publish	Published.
Usage in user program		Possible.	Related instructions	• ResetUnit		
Auxiliary Area addresses	Words	A502 to A507				
	Bits	A502.00 to A507.15				

Variable name		_CJB_SCU00P1ChgSta _CJB_SCU00P2ChgSta to _CJB_SCU15P1ChgSta _CJB_SCU15P2ChgSta			
Meaning		Serial Communications Unit 0, Port 1/2 Settings Changing Flags . . . Serial Communications Units 1 to 15, Port 1/2 Settings Changing Flags		Global/local	Global
Function		TRUE when the parameters of the specified port are being changed. TRUE when the Change Serial Communications Parameter (SerialSetup) instruction is being executed. FALSE after the parameters are changed. It is also possible for the user to indicate a change in serial port settings by turning ON the corresponding flag through the execution of an instruction or a user operation.			
Data type		BOOL		Range of values	TRUE or FALSE
R/W access		RW	Retained	Not retained.	Network Publish	Published.
Usage in user program		Possible.	Related instructions	• SerialSetUp		
Auxiliary Area addresses	Words	Port on Serial Communications Unit with unit number 0: A620 Ports on Serial Communications Unit with unit numbers 1 to 15: A621 to A635			
	Bits	Port on Serial Communications Unit with unit number 0: A620.01 to A620.02 Ports on Serial Communications Unit with unit numbers 1 to 15: A621.01 to A635.02			

A-8 Version Information

This section describes the relationship between the unit versions of CPU Units and the Sysmac Studio versions, and the functions that are supported for each unit version.

A-8-1 Relationship between Unit Versions of CPU Units and Sysmac Studio Versions

This section describes how the unit versions of CPU Units correspond to Sysmac Studio versions. Normally use the corresponding versions.

Unit Versions and Corresponding Sysmac Studio Versions

The following table gives the relationship between unit versions of CPU Units and the corresponding Sysmac Studio versions.

Unit version of CPU Unit	Corresponding version of Sysmac Studio
Ver.1.08	Ver.1.09
Ver.1.07	Ver.1.08
Ver.1.06	Ver.1.07
Ver.1.05	Ver.1.06
Ver.1.04	Ver.1.05
Ver.1.03	Ver.1.04
Ver.1.02	Ver.1.03
Ver.1.01	Ver.1.02
Ver.1.00*1	Ver.1.01
	Ver.1.00

*1 There is no NJ301-□□□□ CPU Unit with unit version 1.00. Therefore, you cannot use an NJ301-□□□□ CPU Unit with Sysmac Studio version 1.01 or lower.

Specifications When Not Using the Sysmac Studio Version That Corresponds to the Unit Version of the CPU Unit

The specifications when you do not use the Sysmac Studio version that corresponds to the unit version of the CPU Unit are given in this section.

● Using an Lower Sysmac Studio Version

If you use a lower version of the Sysmac Studio, you can use only the functions of the unit version of the CPU Unit that corresponds to the Sysmac Studio version.

Example: Unit version of CPU Unit: 1.04
Sysmac Studio version: 1.04
Unit version 1.03 of the CPU Unit corresponds to Sysmac Studio version 1.04. Therefore, you can use only the functions that are supported by unit version 1.03 of the CPU Unit. You cannot use functionality that was added for unit version 1.04 or later of the CPU Unit.

Using a CPU Unit with an Earlier Unit Version

If you use a CPU Unit with an earlier version, select the unit version of the connected CPU Unit or an earlier unit version in the Select Device Area of the Project Properties Dialog Box on the Sysmac Studio. You can use only the functions that are supported by the unit version of the connected CPU Unit.

Example: Unit version of CPU Unit: 1.03
Sysmac Studio version: 1.05
Unit version 1.04 of the CPU Unit corresponds to Sysmac Studio version 1.05. However, the connected CPU Unit is unit version 1.03, so select version 1.03 or earlier as the version in the Select Device Area of the Project Properties Dialog Box. If you select version 1.03 as the version in the Select Device Area of the Project Properties Dialog Box, you can use only the functions that are supported by unit version 1.03 of the CPU Unit. You cannot use functionality that was added for unit version 1.04 or later of the CPU Unit.

Precautions for Correct Use

An error will occur if you perform the following type of operation.

- Create a project on Sysmac Studio version 1.02 or higher with unit version 1.01 or later selected as the version in the Select Device Area of the Project Properties Dialog Box.
- Upload the project to Sysmac Studio version 1.01.

Additional Information

Unit Version Settings for Project Devices

- With Sysmac Studio version 1.02 or higher, you can select the unit version in the Select Device Area of the relevant dialog boxes.
- You can select any unit version that is the same as or earlier than the unit version of the CPU Unit. For example, if the unit version of the CPU Unit is 1.01, select either 1.00 or 1.01.
- The Sysmac Studio will treat the CPU Unit as a CPU Unit with the unit version that is selected for the project device. For example, if you set unit version 1.00 for project device, you can use only the functionality for unit version 1.00 on the Sysmac Studio.
- You can transfer a project to the Sysmac Studio if the unit version that is set for the project device is the same as or earlier than the unit version of the destination CPU Unit.
- Refer to the *Sysmac Studio Version 1 Operation Manual* (Cat. No. W504) for details on the Select Device Area of the relevant dialog boxes.

A-8-2 Functions That Were Added or Changed for Each Unit Version

This section gives the functions that were added or changed for each unit version of the CPU Unit.

● Additions and Changes to Functional Specifications

The following table gives the unit version of the CPU Units and the Sysmac Studio version for each addition or change to the functional specifications.

Function				Addition/ change	Unit version	Sysmac Studio version	Reference
Tasks	Function	Conditionally executed tasks		Addition	1.03	1.04	*NJ-series CPU Unit Software User's Manual* (Cat. No. W501)
Programming	Namespaces			Addition	1.01	1.02	
	Data types	Structure data types	Specifying member offsets	Addition	1.01	1.02	
				Change		1.03	
	Libraries			Addition	1.01	1.02	
Motion control	Single axes	Single-axis position control	Cyclic synchronous absolute positioning	Addition	1.03	1.04	*NJ-series CPU Unit Motion Control User's Manual* (Cat. No. W507)
		Auxiliary function for single-axis control	Homing with specified parameters	Addition	1.03	1.04	
			Enabling digital cam switches	Addition	1.06	1.07	
			Start velocity	Addition	1.05	1.06	
	Axes groups	Multi-axes coordinated control	Axes group cyclic synchronous absolute positioning	Addition	1.01	1.02	
		Auxiliary functions for multi-axes coordinated control	Reading axes group positions	Addition	1.01	1.02	
			Changing the axes in a group	Addition	1.01	1.02	
	Common items	Cams	Generating cam tables	Addition	1.08	1.09	
		Parameters	Changing axis parameters	Addition	1.08	1.09	
	Auxiliary functions	Input signal logic inversion		Addition	1.05	1.06	
Unit (I/O) management	NX Units			Addition	1.05	1.06	*NX-series EtherCAT Coupler Unit User's Manual* (Cat. No. W519)
Communications	EtherNet/IP port	TCP/IP applications	FTP client	Addition	1.08	1.09	*NJ-series CPU Unit Built-in EtherNet/IP Port User's Manual* (W506)
	Communications instructions			Change	1.08	1.09	*NJ-series Instructions Reference Manual* (W502)

Function				Addition/ change	Unit version	Sysmac Studio version	Reference
Debugging function	Differential monitoring			Addition	1.03	1.04	*NJ-series CPU Unit Software User's Manual* (Cat. No. W501)
Reliability functions	Self diagnosis	Controller errors	Changing levels	Addition	1.03	1.04	
Security	Asset protection and preventing incorrect operation	Protection	Data protection	Addition	1.01	1.02	
		Operation authority verification	Number of groups	Change	1.01	1.02	
SD Memory Cards	Application	Automatic transfer from SD Memory Card		Addition	1.03	1.04	
Backing up data	SD Memory Card backups	Operating methods	CPU Unit front-panel DIP switch	Addition	1.03	1.04	*NJ-series CPU Unit Software User's Manual* (Cat. No. W501)
			Specification with system-defined variables	Addition	1.03	1.04	
			SD Memory Card Dialog Box in Sysmac Studio	Addition	1.03	1.04	
			Special instruction	Addition	1.08	1.09	
		Protection	Disabling backups to SD Memory Cards	Addition	1.03	1.04	
	Sysmac Studio Controller backups			Addition	1.03	1.04	

Note Refer to the manuals for the function modules for additions and changes to function module functions for each unit version of the CPU Units.

● Addition of Mountable CJ-series Units

The CJ-series Units that can be mounted have increased for the new unit version of the CPU Unit. For details, refer to *NJ-series CPU Unit Software User's Manual* (Cat. No. W501).

● Additions and Changes to Basic Instructions and Motion Control Instructions

The basic instructions and motion control instructions that you can use have increased or changed for the new unit version of the CPU Unit. For details, refer to the *NJ-series Instructions Reference Manual* (Cat. No. W502) and *NJ-series Motion Control Instructions Reference Manual* (Cat. No. W508).

Additions and Changes to Controller Events

The events that can occur have increased or changed for the new unit version of the CPU Unit. There are also changes in the recovery methods to use when some errors occur.
For details, refer to the *NJ-series Troubleshooting Manual* (Cat. No. W503).

● Additions and Changes to System-defined Variables

The system-defined variables that you can use have increased or changed for the new unit version of the CPU Unit. Refer to the *A-6 System-defined Variables Related to Hardware* for details.

A-8-3 Performance Improvements for Unit Version Upgrades

This section introduces the functions for which performance was improved for each unit version of the CPU Unit and for each Sysmac Studio version.

Function				Performance value	Unit version	Sysmac Studio version
Programming	Program capacity	Quantities	Number of POU instances (NJ501-□□□□)	9,000	---	1.06 or higher
				6,000	---	1.05 or lower
			Number of POU instances (NJ301-□□□□)	3,000	1.04 or later	1.05 or higher
				1,500		1.04 or lower
				2,400	1.03 or earlier	1.05 or higher
				1,500		1.04 or lower
	Memory capacity for variables	Variables with a Retain attribute	Number of variables[*1] (NJ301-□□□□)	5,000	1.04 or later	1.05 or higher
				2,500		1.04 or lower
				2,500	1.03 or earlier	---
Motion Control	Number of controlled axes	Maximum number of controlled axes[*2*3*4] (NJ301-□□□□)		15 axes	1.06 or later	1.07 or higher
				8 axes (NJ301-1200) 4 axes (NJ301-1100)	Other than the above combination	
		Maximum number of axes for single-axis control[*4*5] (NJ301-□□□□)		15 axes	1.06 or later	1.07 or higher
				8 axes (NJ301-1200) 4 axes (NJ301-1100)	Other than the above combination	
Built-in EtherNet/IP port	CIP service: Tag data links (cyclic communications)	Packet interval		Can be set for each connection. 1 to 10,000 ms in 1-ms increments	1.03 or higher	---
				Can be set for each connection. 10 to 10,000 ms in 1-ms increments	1.02 or lower	
		Permissible communications band		3,000 pps[*6] (including heartbeat)	1.03 or higher	---
				1,000 pps (including heartbeat)	1.02 or lower	
	Number of TCP sockets			30	1.03 or higher	---
				16	1.02 or lower	
Built-in EtherCAT port	Communications cycle[*7] (NJ301-□□□□)			500, 1,000, 2,000, or 4,000 μs	1.03 or higher	---
				1,000, 2,000, or 4,000 μs	1.02 or lower	

*1 The performance improvement applies only to an NJ301-□□□□ CPU Unit. The maximum number of variables with a Retain attributes for the NJ501-□□□□ is 10,000.

*2 This is the total for all axis types.

*3 The performance improvement applies only to an NJ301-□□□□ CPU Unit. The maximum numbers of controlled axes for the NJ501-□□□□ are as follows:
NJ501-1500: 64 axes, NJ501-1400: 32 axes, and NJ501-1300: 16 axes

*4 There is no change in the maximum number of used real axes.

*5 The performance improvement applies only to an NJ301-□□□□ CPU Unit. The maximum numbers of axes for single-axis control for the NJ501-□□□□ are as follows:
NJ501-1500: 64 axes, NJ501-1400: 32 axes, and NJ501-1300: 16 axes

*6 Here, pps means “packets per second” and indicates the number of packets that can be processed in one second.

*7 The performance improvement applies only to an NJ301-□□□□ CPU Unit. The following communications cycles can be used with an NJ501-□□□□ CPU Unit: 500, 1,000, 2,000, or 4,000 μs.

I

Index

Index

A

abnormal conditions 5-66, 5-67
_AlarmFlag A-104, A-113
assumed causes 5-13, 5-15, 5-18

B

B7A communications specifications 3-25
B7A interface ports 3-24
B7A Interface Units 3-24
  wiring 4-43
Backup Function Busy Flag A-107
_BackupBusy A-107, A-118
Basic I/O Unit Information
  ... 3-29, A-35, A-37, A-38, A-39, A-97, A-100, A-110, A-121
Basic I/O Units
  specifications A-4
Basic Input Unit Input Response Times A-109, A-121
basic system configuration 2-2
basic system configurations 1-4
battery connector 3-3
battery replacement procedure 6-6
battery service life and replacement period 6-4
Battery Set 2-7, 6-3, 6-5
Battery-backup Memory Check Error 5-30
built-in EtherCAT port 3-3
built-in EtherNet/IP port 3-3
BUSY indicator 3-4

C

_Card1Access A-104, A-114
_Card1BkupCmd A-105, A-115, A-116
_Card1BkupSta A-106, A-116, A-117
_Card1Deteriorated A-104, A-114
_Card1Err A-104, A-114
_Card1PowerFail A-104, A-115
_Card1Protect A-104, A-114
_Card1Ready A-104, A-113
_Card1VefySta A-106, A-117, A-118
causes 5-66, 5-67
_CJB_CBU00InitSta
  to _CJB_CBU15InitSta A-110, A-121
_CJB_CBU00Restart
  to _CJB_CBU15Restart A-110, A-122
_CJB_ErrSta A-109, A-120
_CJB_InRespTm A-109, A-121
_CJB_IOUnitInfo
  .... 3-29, A-35, A-37, A-38, A-39, A-97, A-100, A-110, A-121
_CJB_MaxRackNo A-109, A-120
_CJB_MaxSlotNo A-109, A-120
_CJB_MstrErrSta A-109, A-120
_CJB_SCU00P1ChgSta
  to _CJB_SCU00P2ChgSta A-110
_CJB_SCU00P1ChgSta, _CJB_SCU00P2ChgSta
  to _CJB_SCU15P1ChgSta,
  _CJB_SCU15P2ChgSta A-123
_CJB_SCU15P1ChgSta
  to _CJB_SCU15P2ChgSta A-110
_CJB_SIO00InitSta to _CJB_SIO95InitSta ... A-110, A-122
_CJB_SIO00Restart
  to _CJB_SIO95Restart A-110, A-122
_CJB_UnitErrSta A-109, A-121
CJ-series Basic I/O Units 2-12, 3-20
  list 2-13
  wiring models with connectors 4-33
  wiring models with terminal blocks 4-31
CJ-series Configuration Units 2-11, 2-13
CJ-series CPU Bus Units 2-12
  list 2-17
CJ-series I/O Control Unit 2-7, 3-30
CJ-series I/O Interface Unit 2-10, 3-30
CJ-series Special I/O Units 2-12
  list 2-16
CJ-series Unit Configuration 2-2, 2-5
CJ-series Unit configuration 1-4
connector types 3-22, 4-33, 4-35
Connector-Terminal Block Conversion Units
  connecting 4-38, A-55
  connections A-57
contact current vs. service life characteristic A-53
contact protection circuit A-53
control panel
  installation 4-11
Controller components
  connecting 4-14
Controller Error Status A-104, A-113
CPU Bus Unit Initializing Flags A-110, A-121
CPU Bus Unit Restart Bits A-110, A-122
CPU Rack 2-5
CPU Unit
  components and functions 3-2
  resetting 5-3
  watchdog timer error 5-3
CPU Unit Overheat 5-30
CPU Units 3-2
CS/CJ-series I/O Connecting Cables 2-11, 4-19
current consumptions 2-6, 2-10, 2-13
_CurrentTime A-103, A-112

D

dimensions 4-22, A-90
DIN Track 2-7, 4-16, 4-18
DIP Switch Setting Error 5-24
DIP switches 3-3, 3-7
Duplicate Unit Number 5-38

E

EMC Directive measures for relay outputs A-101
emergency stop circuit example 4-7
EN 61131-2 ..... A-101
End Cover 2-7, 2-11
End Cover Missing 5-37
ERROR indicator 3-4
errors
  checking for non-fatal errors 5-8
  indicators 5-8
  instructions that read error status 5-10
  system-defined variables 5-10
  table 5-13
  troubleshooting with NS-series PT 5-10
  troubleshooting with Sysmac Studio 5-9
_ErrSta A-104, A-113
EtherCAT network configuration 1-4, 2-2, 2-4
event codes 5-13, 5-15, 5-18
event levels 5-4
event logs 4-5
event names 5-13, 5-15, 5-18
Execute Backup Flag A-115
Expansion Racks 2-9

F

fail-safe circuits 4-6
fatal errors 5-3
Fujitsu connectors 3-22, 4-34

G

GR terminal 3-14, 4-30
grounding 4-30, 4-56

I

I/O Bus Check Error 5-35
I/O Bus Error Status A-109, A-120
I/O Bus Master Error Status A-109, A-120
I/O Bus Unit Error Status A-109, A-121
I/O Connecting Cables 2-11, 4-19
I/O Relay Terminals
  connecting 4-38, A-55
  connection patterns A-56
  connections A-62
I/O Setting Check Error 5-39
ID information label 3-3, 3-8
Illegal Packet Discarded 5-43
Impossible to Access Special Unit 5-40
Incorrect Power Supply Unit Connected error 3-4
Incorrect Unit/Expansion Rack Connection 5-37
indicators 3-3, 3-4
inductive loads A-53
input devices 4-39
inrush current 3-12
installation
  cabinets or control panels 4-9
  dimensions 4-24
  height 4-25
interlock circuits 4-8
Internal NJ-series Bus Check Error 5-24
Interrupt Input Unit 2-13, A-18

L

Largest Rack Number A-109, A-120
Largest Slot Number A-109, A-120
LG terminal 3-14, 4-30
line disconnection detection A-96
LINK/ACT indicator 3-6, 3-7
load short-circuit protection A-96
lot numbers 3-8
Low Battery Voltage 5-29

M

MAC addresses 3-8
Main Memory Check Error 5-27
MIL connectors 3-22, 4-35

N

NET ERR indicator 3-6, 3-7
NET RUN indicator 3-6, 3-7
network configuration 1-5, 2-19
non-fatal errors 5-4
Non-volatile Memory Data Corrupted 5-26
Non-volatile Memory Life Exceeded 5-25
Non-volatile Memory Restored or Formatted 5-25

O

operation
  before operation-ready status 4-2
output wiring
  precautions 4-42

P

periodic inspection 6-2
Peripheral USB port 3-3
PLC Function Module Error Status A-109, A-119
_PLC_ErrSta A-109, A-119
power consumption
  calculating 3-18
Power Interruption Count A-107, A-108, A-118
power OFF detection time 4-4
power OFF operation 4-3
power supply
  wiring 4-26
Power Supply Unit
  incorrect model 5-3
Power Supply Units 2-6, 2-10, 3-12
  selecting 3-15
power supply wiring 4-7
_PowerOnCount A-107, A-108, A-118

_PowerOnHour A-107, A-108, A-118
precautions
output wiring 4-42
PWR indicator 3-14

Q

Quick-response Input Unit 2-13, A-19
quick-response inputs 3-23

R

Real-Time Clock Failed 5-29
Real-Time Clock Stopped 5-28
replacement procedure 6-6
_RetainFail A-107, A-108, A-119
Retention Failure Flag A-107, A-108, A-119
RUN indicator 3-4
RUN output 3-15, 4-27, 4-29

S

SD BUSY indicator 3-5
SD cards 3-9
SD Memory Card Access Flag A-104, A-114
SD Memory Card Access Power OFF Error 5-33
SD Memory Card Backup Commands A-105
SD Memory Card Backup Status A-106
SD Memory Card connector 3-3
SD Memory Card Data Corrupted 5-33
SD Memory Card Error Flag A-114
SD Memory Card Invalid Format 5-32
SD Memory Card Invalid Type 5-31
SD Memory Card Life Exceeded 5-31
SD Memory Card Life Warning Flag A-104, A-114
SD Memory Card Power Interruption Flag A-104, A-115
SD Memory Card Power Supply Switch 3-3
SD Memory Card Ready Flag A-104, A-113
SD Memory Card Restored or Formatted 5-32
SD Memory Card Verify Status A-106
SD Memory Card Write Protected Flag A-104, A-114
SD Memory Cards 2-7, 3-9
SD PWR indicator 3-5
Serial Communications Unit 0,
Port 1/2 Settings Changing Flags A-110, A-123
Serial Communications Units 1 to 15,
Port 1/2 Settings Changing Flags A-110, A-123
service life expectancy A-53
sliders 3-3, 4-14
slots 2-5
Special I/O Unit Initializing Flags A-110, A-122
Special I/O Unit Restart Bits A-110, A-122
specifications 1-7, A-3
starting 3-4
Support Software 1-6
Sysmac Studio 3-31
System Time A-103, A-112
system-defined variables
Auxiliary Area bits for CJ-series Units A-110, A-121
clock A-103, A-112
errors A-104, A-109, A-113, A-119
I/O bus errors A-109, A-120
I/O bus status A-109, A-120
meanings of error status bits A-111
power supply A-107, A-108, A-118
SD Memory Cards A-104, A-113

T

Too Many I/O Points 5-36
Total Power ON Time A-107, A-108, A-118
transmission delay switch 3-28
troubleshooting 5-11

U

Unit connector 3-3
Unit current consumption
calculating 3-15
Units 2-6, 2-10
_UnitVersion A-108, A-119
Unsupported Unit Detected 5-36
User-defined Error Status A-104, A-113

W

weights 2-6, 2-10, 2-13
wiring ducts 4-12
write protection key 3-9

OMRON Corporation **Industrial Automation Company**
Tokyo, JAPAN
Contact: www.ia.omron.com

Regional Headquarters
OMRON EUROPE B.V.
Wegalaan 67-69-2132 JD Hoofddorp
The Netherlands
Tel: (31)2356-81-300/Fax: (31)2356-81-388

OMRON ELECTRONICS LLC
One Commerce Drive Schaumburg,
IL 60173-5302 U.S.A.
Tel: (1) 847-843-7900/Fax: (1) 847-843-7787

OMRON ASIA PACIFIC PTE. LTD.
No. 438A Alexandra Road # 05-05/08 (Lobby 2),
Alexandra Technopark,
Singapore 119967
Tel: (65) 6835-3011/Fax: (65) 6835-2711

OMRON (CHINA) CO., LTD.
Room 2211, Bank of China Tower,
200 Yin Cheng Zhong Road,
PuDong New Area, Shanghai, 200120, China
Tel: (86) 21-5037-2222/Fax: (86) 21-5037-2200

Authorized Distributor:

© OMRON Corporation 2011 All Rights Reserved.
In the interest of product improvement,
specifications are subject to change without notice.

Cat. No. W500-E1-09 1213

Automatización Eléctrica
Especialistas en Automatización

Below is a list of articles with direct links to our shop Electric Automation Network where you can see:

- Quote per purchase volume in real time.
- Online documentation and datasheets of all products.
- Estimated delivery time enquiry in real time.
- Logistics systems for the shipment of materials almost anywhere in the world.
- Purchasing management, order record and tracking of shipments.

To access the product, click on the green button.

Product	Code	Reference	Product link
Control system, PROFINET-IO Controller Module	291927	CJ1W-PNT21	Buy on EAN
Machine Controllers, NJ501 SQL Client Machine Controller + 64 Axles	375710	NJ501-1520	Buy on EAN
Machine Controllers, NJ501 SQL Client Machine Controller + 16 Axles	375708	NJ501-1320	Buy on EAN
Industrial relays, interconnection bridge G7TC	122065	G78-04	Buy on EAN
Machine Controllers, NJ501 SQL Client Machine Controller + 32 Axles	375709	NJ501-1420	Buy on EAN