At the end of this document you will find links to products related to this catalog. You can go directly to our shop by clicking HERE. HERE

Cat. No. W456-E1-03

CompoNet
CS1W-CRM21/CJ1W-CRM21

# CompoNet Master Units

# OPERATION MANUAL

OMRON

# CompoNet

# CS1W-CRM21/CJ1W-CRM21 CompoNet Master Units

## Operation Manual

*Revised March 2009*

# Notice:

OMRON products are manufactured for use according to proper procedures by a qualified operator and only for the purposes described in this manual.

The following conventions are used to indicate and classify precautions in this manual. Always heed the information provided with them. Failure to heed precautions can result in injury to people or damage to property.

**⚠ DANGER** Indicates an imminently hazardous situation which, if not avoided, will result in death or serious injury. Additionally, there may be severe property damage.

**⚠ WARNING** Indicates a potentially hazardous situation which, if not avoided, could result in death or serious injury. Additionally, there may be severe property damage.

**⚠ Caution** Indicates a potentially hazardous situation which, if not avoided, may result in minor or moderate injury, or property damage.

# OMRON Product References

All OMRON products are capitalized in this manual. The word “Unit” is also capitalized when it refers to an OMRON product, regardless of whether or not it appears in the proper name of the product.

The abbreviation “Ch,” which appears in some displays and on some OMRON products, often means “word” and is abbreviated “Wd” in documentation in this sense.

The abbreviation “PLC” means Programmable Controller. “PC” is used, however, in some Programming Device displays to mean Programmable Controller.

# Visual Aids

The following headings appear in the left column of the manual to help you locate different types of information.

**Note** Indicates information of particular interest for efficient and convenient operation of the product.

***1,2,3...*** 1. Indicates lists of one sort or another, such as procedures, checklists, etc.

**© OMRON, 2006**

All rights reserved. No part of this publication may be reproduced, stored in a retrieval system, or transmitted, in any form, or by any means, mechanical, electronic, photocopying, recording, or otherwise, without the prior written permission of OMRON.

No patent liability is assumed with respect to the use of the information contained herein. Moreover, because OMRON is constantly striving to improve its high-quality products, the information contained in this manual is subject to change without notice. Every precaution has been taken in the preparation of this manual. Nevertheless, OMRON assumes no responsibility for errors or omissions. Neither is any liability assumed for damages resulting from the use of the information contained in this publication.

# TABLE OF CONTENTS


**PRECAUTIONS . . . . . xv**

1 Intended Audience . . . . . xvi
2 General Precautions . . . . . xvi
3 Safety Precautions . . . . . xvi
4 Operating Environment Precautions . . . . . xvii
5 Application Precautions . . . . . xviii
6 Conformance to EC Directives . . . . . xx
7 Conformance to Shipbuilding Standards . . . . . xxi

**SECTION 1**
**Overview . . . . . 1**

1-1 CompoNet Networks . . . . . 2
1-2 CompoNet Network Specifications . . . . . 7
1-3 Devices in a CompoNet Network . . . . . 13
1-4 Overview of Design Flow . . . . . 19
1-5 Overview of Operating Procedure . . . . . 20
1-6 Design and Operating Procedure Examples . . . . . 21

**SECTION 2**
**Master Units . . . . . 33**

2-1 Master Unit Specifications . . . . . 34

**SECTION 3**
**Wiring Configurations . . . . . 43**

3-1 Wiring Formations . . . . . 44
3-2 CompoNet Network Wiring . . . . . 45

**SECTION 4**
**Installation and Wiring . . . . . 59**

4-1 Installation . . . . . 60
4-2 Connecting Cables . . . . . 64
4-3 Preparing and Mounting Flat Connectors . . . . . 75
4-4 Power Supply Wiring . . . . . 87

**SECTION 5**
**Remote I/O Communications . . . . . 101**

5-1 Exchanging Data with the CPU Unit . . . . . 102
5-2 Allocations to Slave Units . . . . . 111
5-3 Remote I/O Communications Performance . . . . . 139

# TABLE OF CONTENTS


## SECTION 6
## Message Communications . . . . . 151

6-1 Message Communications . . . . . 152
6-2 Overview of FINS Commands and Responses . . . . . 154
6-3 Using FINS Message Communications . . . . . 156
6-4 Sending Explicit Messages . . . . . 159

## SECTION 7
## Other Functions . . . . . 167

7-1 Simple Backup Function . . . . . 168

## SECTION 8
## Troubleshooting . . . . . 171

8-1 Handling Errors . . . . . 172
8-2 Error History Function . . . . . 178

## Appendix

A FINS Commands Addressed to CompoNet Master Units and Responses . . . . . 183

## Index . . . . . 195

## Revision History . . . . . 199

# About this Manual:

This manual describes the installation and operation of the CS1W-CRM21 and CJ1W-CRM21 CompoNet Master Units and includes the sections described below.

Please read this manual carefully and be sure you understand the information provided before attempting to install or operate a CompoNet Master Unit. Be sure to read the precautions provided in the following section. Also be sure to read the *CompoNet Slave Unit Operation Manual* (see following table) together with this manual.

***Precautions*** provides general precautions for using the CompoNet Master Unit, Programmable Controller, and related devices.

***Section 1*** provides an overview of CompoNet Networks.

***Section 2*** provides the specifications of the CompoNet Master Units.

***Section 3*** describes the configurations of CompoNet Networks.

***Section 4*** describes how to install and wire a CompoNet Network.

***Section 5*** describes the remote I/O communications that are possible with CompoNet Networks.

***Section 6*** describes the message communications that are possible with CompoNet Networks.

***Section 7*** provides information on dealing with problems that might occur with CompoNet Master Units.

# Related Manuals:

| Cat. No. | Models | Name | Description |
|---|---|---|---|
| W456 (this manual) | CS1W-CRM21 and CJ1W-CRM21 | CS/CJ-series CompoNet Master Units Operation Manual | Provides an overview of CompoNet Networks, communications specifications, wring methods, and CompoNet Master Unit functions. |
| W457 | CRT1 Series | CompoNet Slave Units and Repeater Unit Operation Manual | Provides the specifications of CompoNet Slave Units and Repeater Unit. |
| W464 | CXONE-AL□□C-V□<br>CXONE-AL□□D-V□ | CX-Integrator Operation Manual | Describes CX-Integrator operating methods, e.g., for setting up and monitoring networks. |

⚠ **WARNING** Failure to read and understand the information provided in this manual may result in personal injury or death, damage to the product, or product failure. Please read each section in its entirety and be sure you understand the information provided in the section and related sections before attempting any of the procedures or operations given.

# Read and Understand this Manual

Please read and understand this manual before using the product. Please consult your OMRON representative if you have any questions or comments.

# Warranty and Limitations of Liability

| WARRANTY |
| --- |
| OMRON's exclusive warranty is that the products are free from defects in materials and workmanship for a period of one year (or other period if specified) from date of sale by OMRON.<br><br>OMRON MAKES NO WARRANTY OR REPRESENTATION, EXPRESS OR IMPLIED, REGARDING NON-INFRINGEMENT, MERCHANTABILITY, OR FITNESS FOR PARTICULAR PURPOSE OF THE PRODUCTS. ANY BUYER OR USER ACKNOWLEDGES THAT THE BUYER OR USER ALONE HAS DETERMINED THAT THE PRODUCTS WILL SUITABLY MEET THE REQUIREMENTS OF THEIR INTENDED USE. OMRON DISCLAIMS ALL OTHER WARRANTIES, EXPRESS OR IMPLIED. |

| LIMITATIONS OF LIABILITY |
| --- |
| OMRON SHALL NOT BE RESPONSIBLE FOR SPECIAL, INDIRECT, OR CONSEQUENTIAL DAMAGES, LOSS OF PROFITS OR COMMERCIAL LOSS IN ANY WAY CONNECTED WITH THE PRODUCTS, WHETHER SUCH CLAIM IS BASED ON CONTRACT, WARRANTY, NEGLIGENCE, OR STRICT LIABILITY.<br><br>In no event shall the responsibility of OMRON for any act exceed the individual price of the product on which liability is asserted.<br><br>IN NO EVENT SHALL OMRON BE RESPONSIBLE FOR WARRANTY, REPAIR, OR OTHER CLAIMS REGARDING THE PRODUCTS UNLESS OMRON'S ANALYSIS CONFIRMS THAT THE PRODUCTS WERE PROPERLY HANDLED, STORED, INSTALLED, AND MAINTAINED AND NOT SUBJECT TO CONTAMINATION, ABUSE, MISUSE, OR INAPPROPRIATE MODIFICATION OR REPAIR. |

# Application Considerations

## SUITABILITY FOR USE

OMRON shall not be responsible for conformity with any standards, codes, or regulations that apply to the combination of products in the customer's application or use of the products.

At the customer's request, OMRON will provide applicable third party certification documents identifying ratings and limitations of use that apply to the products. This information by itself is not sufficient for a complete determination of the suitability of the products in combination with the end product, machine, system, or other application or use.

The following are some examples of applications for which particular attention must be given. This is not intended to be an exhaustive list of all possible uses of the products, nor is it intended to imply that the uses listed may be suitable for the products:

- Outdoor use, uses involving potential chemical contamination or electrical interference, or conditions or uses not described in this manual.
- Nuclear energy control systems, combustion systems, railroad systems, aviation systems, medical equipment, amusement machines, vehicles, safety equipment, and installations subject to separate industry or government regulations.
- Systems, machines, and equipment that could present a risk to life or property.

Please know and observe all prohibitions of use applicable to the products.

NEVER USE THE PRODUCTS FOR AN APPLICATION INVOLVING SERIOUS RISK TO LIFE OR PROPERTY WITHOUT ENSURING THAT THE SYSTEM AS A WHOLE HAS BEEN DESIGNED TO ADDRESS THE RISKS, AND THAT THE OMRON PRODUCTS ARE PROPERLY RATED AND INSTALLED FOR THE INTENDED USE WITHIN THE OVERALL EQUIPMENT OR SYSTEM.

## PROGRAMMABLE PRODUCTS

OMRON shall not be responsible for the user's programming of a programmable product, or any consequence thereof.

# Disclaimers

## CHANGE IN SPECIFICATIONS

Product specifications and accessories may be changed at any time based on improvements and other reasons.

It is our practice to change model numbers when published ratings or features are changed, or when significant construction changes are made. However, some specifications of the products may be changed without any notice. When in doubt, special model numbers may be assigned to fix or establish key specifications for your application on your request. Please consult with your OMRON representative at any time to confirm actual specifications of purchased products.

## DIMENSIONS AND WEIGHTS

Dimensions and weights are nominal and are not to be used for manufacturing purposes, even when tolerances are shown.

## PERFORMANCE DATA

Performance data given in this manual is provided as a guide for the user in determining suitability and does not constitute a warranty. It may represent the result of OMRON's test conditions, and the users must correlate it to actual application requirements. Actual performance is subject to the OMRON Warranty and Limitations of Liability.

## ERRORS AND OMISSIONS

The information in this manual has been carefully checked and is believed to be accurate; however, no responsibility is assumed for clerical, typographical, or proofreading errors, or omissions.

# PRECAUTIONS

This section provides general precautions for using the CS1W-CRM21 and CJ12-CRM21 CompoNet Master Units.

**The information contained in this section is important for the safe and reliable application of the CompoNet Master Units. You must read this section and understand the information contained before attempting to set up or operate a CompoNet Network using CompoNet Master Units.**


1 Intended Audience . . . . . xvi
2 General Precautions . . . . . xvi
3 Safety Precautions . . . . . xvi
4 Operating Environment Precautions . . . . . xvii
5 Application Precautions . . . . . xviii
6 Conformance to EC Directives . . . . . xx
6-1 Applicable Directives . . . . . xx
6-2 Concepts . . . . . xx
6-3 Conformance to EC Directives . . . . . xxi
7 Conformance to Shipbuilding Standards . . . . . xxi
7-1 Applicable Shipping Standards . . . . . xxi
7-2 Installation Location . . . . . xxi
7-3 Conditions for Use Under Shipping Standards . . . . . xxi

# 1 Intended Audience

This manual is intended for the following personnel, who must also have knowledge of electrical systems (an electrical engineer or the equivalent).

- Personnel in charge of installing FA systems.
- Personnel in charge of designing FA systems.
- Personnel in charge of managing FA systems and facilities.

# 2 General Precautions

The user must operate the product according to the performance specifications described in the operation manuals.

Before using the product under conditions which are not described in the manual or applying the product to nuclear control systems, railroad systems, aviation systems, vehicles, combustion systems, medical equipment, amusement machines, safety equipment, and other systems, machines, and equipment that may have a serious influence on lives and property if used improperly, consult your OMRON representative.

Make sure that the ratings and performance characteristics of the product are sufficient for the systems, machines, and equipment, and be sure to provide the systems, machines, and equipment with double safety mechanisms.

This manual provides information for programming and operating the Unit. Be sure to read this manual before attempting to use the Unit and keep this manual close at hand for reference during operation.

⚠ **WARNING** It is extremely important that a PLC and all PLC Units be used for the specified purpose and under the specified conditions, especially in applications that can directly or indirectly affect human life. You must consult with your OMRON representative before applying a PLC System to the above-mentioned applications.

# 3 Safety Precautions

⚠ **WARNING** Do not attempt to take any Unit apart while the power is being supplied. Doing so may result in electric shock.

⚠ **WARNING** Do not touch any of the terminals or terminal blocks while the power is being supplied. Doing so may result in electric shock.

⚠ **WARNING** Fail-safe measures must be taken by the customer to ensure safety in the event of incorrect, missing, or abnormal signals caused by broken signal lines, momentary power interruptions, or other causes. Serious accidents may result from abnormal operation if proper measures are not provided.

⚠ **WARNING** Provide safety measures in external circuits (i.e., not in the Programmable Controller), including the following items, to ensure safety in the system if an abnormality occurs due to malfunction of the PLC or another external factor affecting the PLC operation. ("PLC" includes CPU Units, other Units mounted in the PLC, and Remote I/O Terminals) Not doing so may result in serious accidents.

- Emergency stop circuits, interlock circuits, limit circuits, and similar safety measures must be provided in external control circuits.
- The PLC will turn OFF all outputs when its self-diagnosis function detects any error or when a severe failure alarm (FALS) instruction is executed. As a countermeasure for such errors, external safety measures must be provided to ensure safety in the system.
- The PLC outputs may remain ON or OFF due to deposits on or burning of the output relays, or destruction of the output transistors. As a countermeasure for such problems, external safety measures must be provided to ensure safety in the system.
- When the 24-V DC output (service power supply) is overloaded or short-circuited, the voltage may drop and result in the outputs being turned OFF. As a countermeasure for such problems, external safety measures must be provided to ensure safety in the system.

⚠ **Caution** Execute online editing only after confirming that no adverse effects will be caused by extending the cycle time. Otherwise, the input signals may not be readable.

⚠ **Caution** Confirm safety at the destination node before changing or transferring to another node the contents of a program, the PLC Setup, I/O tables, or I/O memory. Changing or transferring any of these without confirming safety may result in unexpected equipment operation.

# 4 Operating Environment Precautions

⚠ **Caution** Do not operate the control system in the following locations:

- Locations subject to direct sunlight.
- Locations subject to temperatures or humidity outside the range specified in the specifications.
- Locations subject to condensation as the result of severe changes in temperature.
- Locations subject to corrosive or flammable gases.
- Locations subject to dust (especially iron dust) or salts.
- Locations subject to exposure to water, oil, of chemicals (including acids).
- Locations subject to shock or vibration.

⚠ **Caution** The operating environment of the PLC System can have a large effect on the longevity and reliability of the system. Improper operating environments can lead to malfunction, failure, and other unforeseeable problems with the PLC System. Make sure that the operating environment is within the specified conditions at installation and remains within the specified conditions during the life of the system.

# 5 Application Precautions

Observe the following precautions when using a CompoNet Network.

- When more than one CompoNet system use Flat Cables, always separate the Flat Cables from each other by at least 5 mm regardless of whether Flat Cable I or II cables are used. Do not bundle the Flat Cables. This is to prevent unstable operation of the system due to interference.
- Fail-safe measures must be taken by the customer to ensure safety in the event of incorrect, missing, or abnormal signals caused by broken signal lines, momentary power interruptions, or other causes.
- Interlock circuits, limit circuits, emergency stop circuits, and similar safety measures in external circuits (i.e., not in the Programmable Controller) must be provided by the customer.
- Always configure control circuits so that they turn ON power to the I/O Slave Units before turning ON power to the PLC. If the PLC power supply is turned ON first, normal operation will not be possible temporarily.
- Do not attempt to disassemble, repair, or modify any Units. Any attempt to do so may result in malfunction, fire, or electric shock.
- When installing the Unit, ground to 100 Ω min.
- Make sure that all the Backplane mounting screws, Slave Unit mounting screws, terminal block screws, and cable connector screws are tightened to the torque specified in the relevant manuals. Incorrect tightening torque may result in malfunction.
- Wire all connections correctly according to instructions in this manual.
- Confirm the orientation and polarity before connecting terminal blocks or connectors.
- Confirm voltage specifications before wiring communications lines, power supplies, and I/O circuits. Incorrect specification may result in malfunctions.
- Install external breakers and take other safety measures against short-circuiting in external wiring. Insufficient safety measures against short-circuiting may result in burning.
- Leave the label attached to the Unit when wiring. Removing the label may result in malfunction if foreign matter enters the Unit.
- Remove the label after the completion of wiring to ensure proper heat dissipation. Leaving the label attached may result in malfunction.
- Use crimp terminals for wiring. Do not connect bare stranded wires directly to terminals. Connection of bare stranded wires may result in burning.
- Double-check all wiring and switch settings before turning ON the power supply. Incorrect wiring may result in burning.
- Make sure that the terminal blocks, connectors, expansion cables, communications cables, and other items with locking devices are properly locked into place. Improper locking may result in malfunction.
- Disconnect the functional ground terminal when performing withstand voltage tests. Not disconnecting the functional ground terminal may result in burning.
- Always use the power supply voltages specified in the operation manual. An incorrect voltage may result in malfunction or burning.

- Take appropriate measures to ensure that the specified power with the rated voltage and frequency is supplied. Be particularly careful in places where the power supply is unstable. An incorrect power supply may result in malfunction.
- Do not apply voltages to the Input Units in excess of the rated input voltage. Excess voltages may result in burning.
- Do not apply voltages or connect loads to the Output Units in excess of the maximum switching capacity. Excess voltage or loads may result in burning.
- Check the user program for proper execution before actually running it on the Unit. Not checking the program may result in unexpected operation.
- Always turn OFF the power supply to the PLC before attempting any of the following. Not turning OFF the power supply may result in malfunction or electric shock.
  - Mounting or dismounting Power Supply Units, I/O Units, CPU Units, Memory Cassettes, Master Units, or any other Units.
  - Removing or attaching terminal blocks to Remote I/O Terminals.
  - Assembling Racks.
  - Setting DIP switches or rotary switches.
  - Connecting cables or wiring the system.
  - Connecting or disconnecting the connectors.
- Before touching a Unit, be sure to first touch a grounded metallic object in order to discharge any static build-up. Not doing so may result in malfunction or damage.
- Confirm that no adverse effect will occur in the system before attempting any of the following. Not doing so may result in unexpected operation.
  - Changing the operating mode of the PLC.
  - Force-setting/force-resetting any bit in memory.
  - Changing the present value of any word or any set value in memory.
- When replacing parts, be sure to confirm that the rating of a new part is correct. Not doing so may result in malfunction or burning.
- After replacing Units, resume operation only after transferring to the new CPU Unit and/or Special I/O Units the contents of the DM Area, HR Area, and other data required for resuming operation. Not doing so may result in unexpected operation.
- When transporting the Unit, use special packing boxes and protect it from being exposed to excessive vibration or impact during transportation.

- Use only the specified communications cables.
- Do not extend connection distances beyond the ranges given in the specifications.
- Observe the following precautions when wiring the communications cable.
  - Separate the communications cables from the power lines or high-tension lines.
  - Do not bend the communications cables past their natural bending radius.
  - Do not pull on the communications cables.
  - Do not place heavy objects on top of the communications cables.
  - Always lay communications cable inside ducts.

Take appropriate and sufficient countermeasures when installing systems in the following locations:

- Locations subject to static electricity or other forms of noise.
- Locations subject to strong electromagnetic fields.
- Locations subject to possible exposure to radioactivity.
- Locations close to power supplies.

# 6 Conformance to EC Directives

## 6-1 Applicable Directives

- EMC Directives
- Low Voltage Directive

## 6-2 Concepts

**EMC Directives**

OMRON devices are designed so that they comply with the related EMC Directives so that they can be more easily built into other devices or the overall machine. The actual products have been checked for conformity to EMC Directives (see the following note). Whether the products conform to the standards in the system used by the customer, however, must be checked by the customer.

EMC-related performance of the OMRON devices that comply with EC Directives will vary depending on the configuration, wiring, and other conditions of the equipment or control panel on which the OMRON devices are installed. The customer must, therefore, perform the final check to confirm that devices and the overall machine conform to EMC standards.

**Note** Applicable EMC (Electromagnetic Compatibility) standards are as follows:

EMS (Electromagnetic Susceptibility): EN 61000-6-2
EMI (Electromagnetic Interference): EN 61000-6-4
(Radiated emission: 10-m regulations)

**Low Voltage Directive**

Always ensure that devices operating at voltages of 50 to 1,000 V AC and 75 to 1,500 V DC meet the required safety standards for EN 61131-2.

## 6-3 Conformance to EC Directives

The CompoNet Master Units comply with EC Directives. To ensure that the machine or device in which a CompoNet Master Unit is used complies with EC Directives, the CompoNet Master Unit must be installed as follows:

***1,2,3...***

1. The CompoNet Master Unit must be installed within a control panel.
2. You must use reinforced insulation or double insulation for the DC power supplies used for the communications power supply and I/O power supplies.
3. CompoNet Master Units complying with EC Directives also comply with the Common Emission Standard (EN 61000-6-4). Radiated emission characteristics (10-m regulations) may vary depending on the configuration of the control panel used, other devices connected to the control panel, wiring, and other conditions. You must therefore confirm that the overall machine or equipment complies with EC Directives.

# 7 Conformance to Shipbuilding Standards

The CS1W-CRM21 and CJ1W-CRM21 Master Units conform to shipbuilding standards. Applicability of the shipbuilding standards is based on certain usage conditions. It may not be possible to use a Master Unit in some locations. Contact your OMRON representative before attempting to use a Master Unit on a ship.

## 7-1 Applicable Shipping Standards

The Master Units conform to the following standards: LR and DNV.

## 7-2 Installation Location

- The Master Unit cannot be installed on the bridge or on a deck.
- Install the Master Unit where there is not excessive vibration. Do not install it in the engine room or any other location with excessive vibration.

## 7-3 Conditions for Use Under Shipping Standards

- The Master Unit must be installed in a control panel.
- The following DC Power Supply must be used to supply power for communications.

**DC Power Supply**

| | |
|---|---|
| **Manufacturer** | OMRON |
| **Model** | S82J Series |

The DC Power Supply must provide the following specifications.

| Item | Specification |
|---|---|
| Output voltage | 24 VDC |
| Output current | The capacity of the Power Supply must be equal to or greater than the total of the current consumptions of the following Units:<br>All Slaves, Repeater Units, and SmartSlice Units |

# SECTION 1
# Overview

This section provides an overview of CompoNet networks.


1-1 CompoNet Networks . . . . . 2
- 1-1-1 Overview . . . . . 2
- 1-1-2 Overall System Configuration and Elements . . . . . 2
- 1-1-3 System Configuration Patterns . . . . . 4
- 1-1-4 Features of CompoNet Networks . . . . . 5

1-2 CompoNet Network Specifications . . . . . 7
- 1-2-1 Cable Types, Maximum Distances, and Number of Slave Units . . . 9
- 1-2-2 Branch Line Support for Cable Types and Baud Rates . . . . . 11
- 1-2-3 Allocating Slave Units in the CPU Unit Memory Area by Communications Mode Number . . . . . 12

1-3 Devices in a CompoNet Network . . . . . 13
- 1-3-1 Master Units . . . . . 13
- 1-3-2 Peripheral Devices . . . . . 14
- 1-3-3 Selecting Peripheral Devices Used According to Connection Configuration . . . . . 18

1-4 Overview of Design Flow . . . . . 19

1-5 Overview of Operating Procedure . . . . . 20

1-6 Design and Operating Procedure Examples . . . . . 21
- 1-6-1 Design . . . . . 21
- 1-6-2 Operating Procedure . . . . . 27

# 1-1 CompoNet Networks

## 1-1-1 Overview

CompoNet Networks feature easy operation and installation in a component-level network connecting PLCs and on-site I/O.

The PLC and CompoNet Slave Units cyclically exchange I/O information through a CompoNet Master Unit, refreshing I/O in sync with the PLC scan.

Message communications can also be used from host computers or the CPU Unit of the PLC to read and write CompoNet Slave Unit data.

## 1-1-2 Overall System Configuration and Elements

A CompoNet Network is a remote I/O system that consists of the following elements.

### System Configuration Example

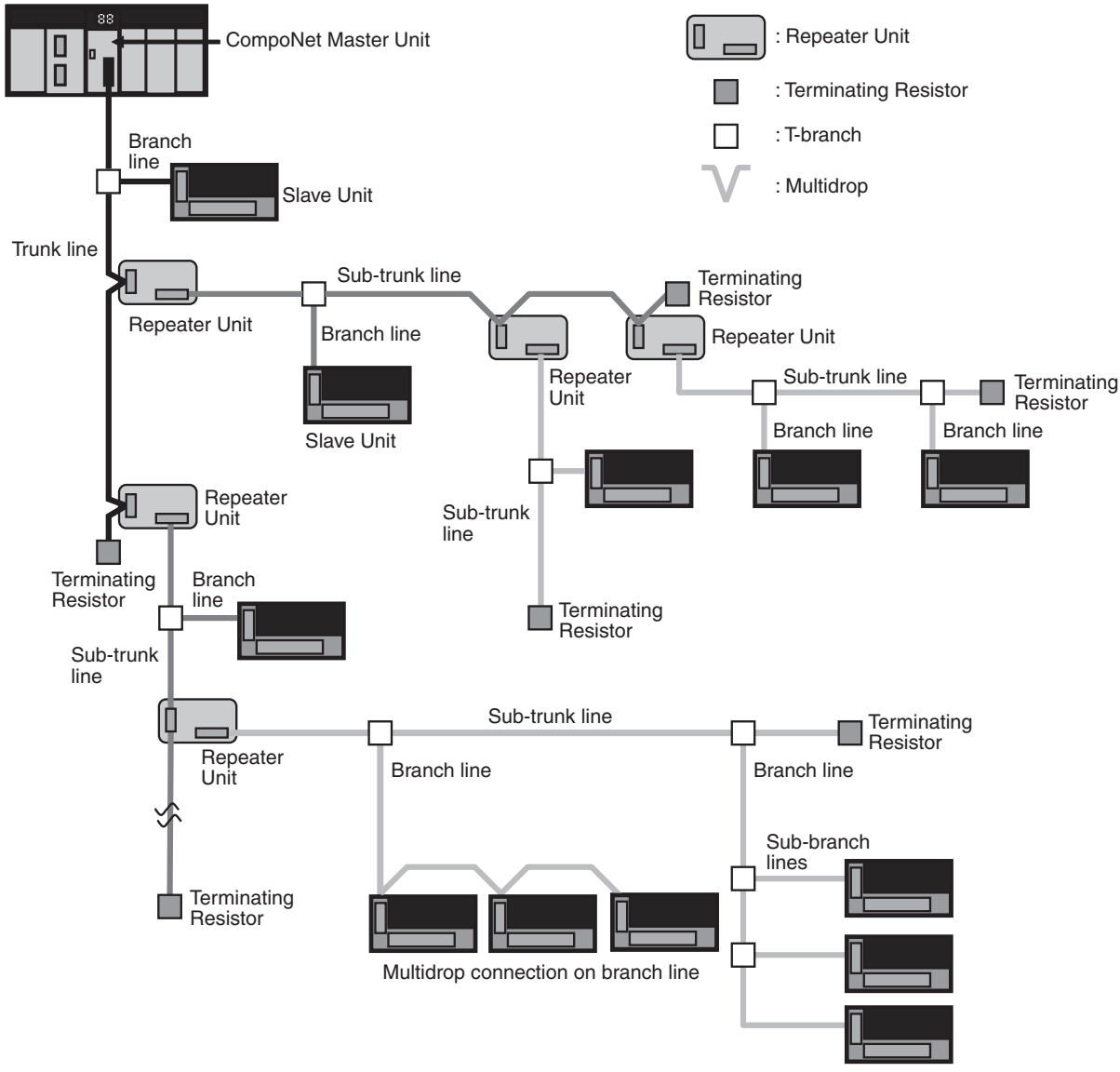

**Communications Cables**

CompoNet Networks use Round Cable I, Round Cable II, Flat Cable I (DCA4-4F10 Standard Flat Cable), and Flat Cable II (DCA5-4F10 Sheathed Flat Cable) for Communications Cables.

**Master Unit**

The Master Unit manages the CompoNet Network and transfers I/O data between the PLC and the Slave Units.

There is only one Master Unit per network. The Master Unit must be connected to the end of the trunk line.

**Slave Units**

Some Slave Units receive output data from the Master Unit across the CompoNet Network and output it. Other Slave Units send data that has been input across the network to the Master Unit. There are two types of Slave Unit according to the I/O capacity of the Slave Unit.

- Word Slave Units: A Word Slave Unit is allocated 16 bits (i.e., 16 I/O points) in the I/O memory of the CPU Unit.
- Bit Slave Units: A Bit Slave Unit is allocated 2 bits (i.e., 2 I/O points) in the I/O memory of the CPU Unit.

**Repeater Unit**

Using Repeater Units enables expanding network connections as follows:

- Extending the Communications Cable
- Increasing the number of nodes (Units)
- Creating long-distance T-branches from the trunk line and sub-trunk lines (See note.)
- Converting between different types of cable (round cable I, round cable II, Flat Cable I, and Flat Cable II)

A sub-trunk line downstream from a Repeater Unit can be connected with the same communications specifications (i.e., distances and number of Slave Units) as the trunk line.

Up to 64 Repeater Units can be connected per network (i.e., per Master Unit). When Repeater Units are connected in series from the Master Unit, up to two layers can be created.

**Note** The physical layer is not connected across a Repeater Unit. The connection is thus different from a branch connection, which branches the same physical layer.

**Terminating Resistors**

With a CompoNet Network, the Master Unit is located at one end of the trunk line and a Terminating Resistor is connected to the other end of the trunk line. If Repeater Units are used, each Repeater Unit is treated like a Master Unit, i.e., Terminating Resistor is connected to the most remote end of the sub-trunk line downstream from the Repeater Unit.

**Note** A Terminating Resistor reduces signal bouncing to stabilize communications and must always be connected to the most remote end of the network lines below the Master Unit and each Repeater Unit. Always connect a Terminating Resistor to ensure the quality of the transmission path.

**Trunk Lines and Branch Lines**

The trunk lines and branch lines in a CompoNet Network are defined as follows:

- Trunk line: The transmission path between the Master Unit and the Terminating Resistor.
- Sub-trunk line: The transmission path between the Repeater Unit and the Terminating Resistor (when a Repeater Unit is used)
- Branch line: The transmission path created using a T-branch from the trunk line or sub-trunk line.

- Sub-branch line: The transmission path created using a T-branch from a branch line. (T-branching is not possible from sub-branch lines.)

  **Note** Due to differences in functionality, the same type of cable must be used between the trunk line and a branch line, a sub-trunk line and a branch line, and a branch line and a sub-branch line. Different types of cable can be used between the trunk line and a sub-trunk line.

**Branches**

There are two ways to create branch lines.

**1) T-branch Connections**

- T-branch connections using Flat Connectors (when Flat Cable I or Flat Cable II is used)
- T-branch connections using commercially available relay terminals (when round cable I or round cable II is used)

**2) Multidrop Connections**

- Multidrop connections using Flat Connectors and Multidrop Connectors (when Flat Cable I or Flat Cable II is used)
- Multidrop connections using Open Type Connectors (when round cable I or round cable II is used)

  **Note** Flat Connectors can also be used to extend the Communications Cable.

**Communications Power Supply**

This is the power supply for communications and internal operations for each Unit.

A commercially available 24-VDC power supply is used for communications and internal operations in each Unit.

One communications power supply can be connected for a trunk line or a sub-trunk line. Communications power is supplied to the trunk line from the Master Unit and to a sub-trunk line from the Repeater Unit.

One power supply cannot be used to supply communications power to more than one line (i.e., to the trunk line and sub-trunk line or to two sub-trunk lines).

**I/O Power Supply**

A commercially available 24-VDC power supply is used to power the I/O operations of the external I/O device connected to a Unit. It is connected to the I/O power supply terminal of the Unit.

## 1-1-3 System Configuration Patterns

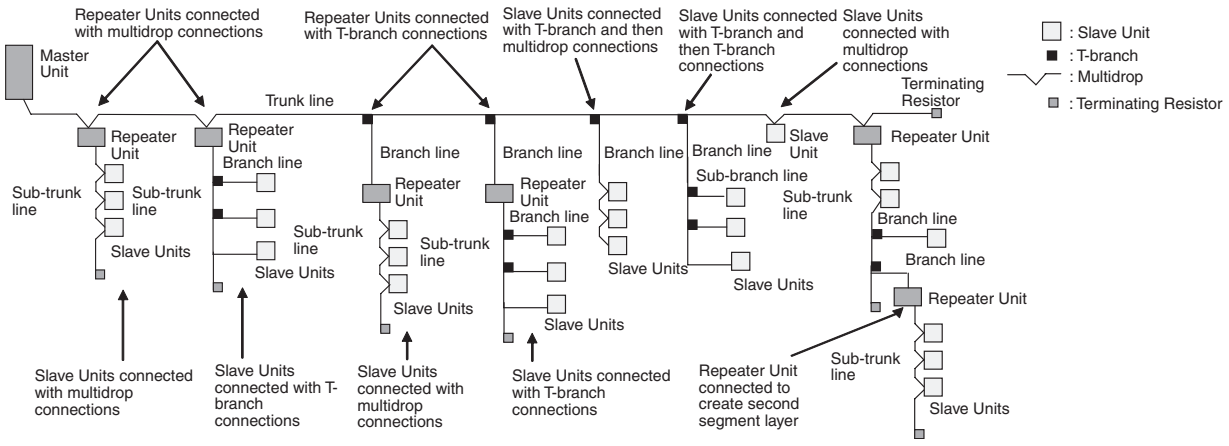

## 1-1-4 Features of CompoNet Networks

**Programless Communications**

With the use of only Round Cable I, Round Cable II, Flat Cable I and Flat Cable II cables, cyclic data exchange or remote I/O communications can be achieved between a Master Unit mounted in a PLC and multiple Slave Units.

**High-speed Multi-point Processing**

Remote I/O communications for up to 2,560 I/O points can be achieved at approximately 1,000 points per millisecond (at 4 Mbps, see note). This enables configuring CompoNet Network systems to replace systems previously configured with Basic I/O Units.

**Note** Branch lines cannot be used at 4 Mbps. Slave Units with Cables (i.e., Bit Slave Units) can thus not be used.

**Easy Introduction**

Remote I/O communications can be started merely by connecting the Master Unit and Slave Units with communications cables, setting the switches on the Master Unit, and turning ON the power to the Slave Units and PLC.

**Repeater Units for Greater Flexibility**

Repeater Units can be used in a network to enable the following network expansions.

- Extending the cable length
- Increasing the number of nodes
- Branching from the trunk line
- Changing the type of cable

Repeater Units can be used to extend up to two segment layers (called sub-trunk lines) from the trunk line. Up to 64 Repeater Units can be connected per Master Unit and up to 32 Repeater Units can be connected to the trunk line.

**Note** Communications power is supplied to a sub-trunk line from the Repeater Unit.

**Bit-level Distribution**

Slave Units with industry-standard e-CON connectors or clamping terminal blocks can be used to distribute I/O at the bit level. This enables distributed control in distributed devices, such as sensors and other devices located over a wide area on conveyors or in warehouses.

Bit Slave Units are available in two types: IP20 and IP54.

**Five Communications Modes According to Number of Nodes, I/O Points, and Allocated Memory**

There are five communications modes that can be used according to number of Slave Units, the number of I/O points, and the location of allocated memory. Memory can be allocated to Slave Units in the Special I/O Unit portion of the CIO Area or, if the CX-Integrator software settings are used, in any part of the CIO, DM, Work, and Holding Areas.

This enables efficient application of memory according to the size of the system.

**Data Exchange with Message Communications**

Message communications can be used from the CX-Integrator running on a host computer or from the CPU Unit of the PLC to access Slave Units and Repeater Units on the CompoNet Network. This enables easily improving network and system maintenance.

**Easy Maintenance with Complete System Monitoring Functions**

The CompoNet Network is constantly monitored to enable confirming system safety by quickly isolating errors and checking communications status.

**■ CX-Integrator**

The CX-Integrator provides the following network functionality.

- Uploading the network configuration
- Editing and transferring software setting tables

- Editing and transferring registration tables
- Setting Input Data Zero Clear Mode for when communications error occur
- Setting I/O Communications Manual Startup Mode
- Monitoring Master Unit status
- Monitoring the Master Unit error history
- Monitoring Slave Unit network participation status
- Setting and transferring Slave Unit parameters
- Monitoring Slave Unit information
- Managing files
- Managing hardware (EDS files)

### ■ Smart Slave Unit Functions

The Slave Units provide Smart Functions that can record various added-value information in addition to the ON/OFF signals (I/O data). This enables preventive system maintenance (including operation time monitoring and contact operation counter monitoring) and aids in faster system introduction (including communications power voltage monitoring and I/O power status monitoring). Settings are possible from either the CX-Integrator or through message communications.

### ■ Master Unit Detection of Network Participation, Errors, and Status

When a Slave Unit joins the network, a bit corresponding to the node address called a Participation Flag will turn ON. If a Slave Unit that has been participating in the network leaves the network, a bit corresponding to the node address called an Error Flag will turn ON.

Network status, such as communications errors and redundant Slave Unit node address, and Slave Unit diagnostic results are detected by the Master Unit and display on the seven-segment display on the front panel and reflected in the Status Flags.

### ■ Registration Tables

Tables of the Slave Unit that should be participating at each node (i.e., the node address and corresponding Slave Unit model number) can be registered from the CX-Integrator to verify the Slave Units actually participating in the network and prevent unregistered Slave Units from participating in the network. A monitoring time for registered Slave Unit participation after power is turned ON can also be set.

Remote I/O communications can be stopped until all registered Slave Units are participating and remote I/O communications can be started as soon as all registered Slave Units are participating (called Registered Slave Unit Participation Standby Mode).

### ■ Stopping Communications at Communications Errors

A DIP switch on the front of the Master Unit can be set to stop remote I/O communications when a communications error has occurred in any of the Slave Units.

### ■ I/O Communications Manual Startup Mode

I/O Communications Manual Startup Mode can be set from the CX-Integrator so that remote I/O communications are not started when the power is turned ON. Remote I/O communications will not start until the Remote I/O Communications Start Switch is turned ON in memory.

■ **Communications Error Input Data Zero Clear Mode**

Input Data Zero Clear Mode can be set from the CX-Integrator for communications error. If a communications error occurs for a Slave Unit in this mode, all input data for that Slave Unit will be cleared to zeros. This can be used to suppress triggering operations when communications errors have occurred in systems where ON input data signals are used as triggers for operation.

■ **Communications Status on Master Unit Seven-segment Display**

The seven-segment display on the front of the Master Unit can be used to check communications status.

The baud rate is normally displayed, but if an error occurs, the error code is displayed in hexadecimal and the error node address is displayed in decimal.

**Automatic Baud Rate Detection**

The Slave Units will automatically detect and use the baud rate set on the DIP switch on the Master Unit. Setting the baud rate is not necessary for any of the Slave Units.

# 1-2 CompoNet Network Specifications

| Item | Specifications |
|---|---|
| Communications method | CompoNet protocol |
| Types of communications | Remote I/O communications (programless, constant sharing of data with Slave Units) and message communications (explicit message communications as required with Slave Units and FINS message communications as required with PLCs) |
| Baud rate | 4 Mbps (See note)., 3 Mbps, 1.5 Mbps, 93.75 kbps<br>**Note** A baud rate of 4 Mbps is not supported for branch lines and thus cannot be used for Slave Units with Cables (i.e., Bit Slave Units). |
| Modulation | Base-band |
| Coding | Manchester code |
| Error control | Manchester code rules, CRC |
| Communications media | The following cables can be used.<br>• Round Cable I (VCTF 2-conductor cable, JIS C3306)<br>• Round Cable II (VCTF 4-conductor cable, JIS C3306)<br>• Flat Cable I (DCA4-4F10 Standard Flat Cable)<br>• Flat Cable II (DCA5-4F10 Sheathed Flat Cable)<br>**Note** Round Cable I, Round Cable II, Flat Cable I, and Flat Cable II cables are all treated as different types of cables. When two or more type of cables are used in a single network, a Repeater Unit must be used to separate any two different types of cables between the trunk line and a sub-trunk line. |
| Communications distance and wiring | Refer to *1-2-1 Cable Types, Maximum Distances, and Number of Slave Units*. |
| Connectable Master Units | CompoNet Master Units |
| Connectable Slave Units | CompoNet Slave Units |
| Maximum I/O capacity | Word Slave Units: 1,024 inputs and 1,024 outputs (2,048 I/O points total)<br>Bit Slave Units: 256 inputs and 256 outputs (512 I/O points total) |
| Maximum number of nodes | Word Slave Units: 64 input nodes and 64 output nodes<br>Bit Slave Units: 128 input nodes and 128 output nodes |
| Bits allocated per node address | Word Slave Units: 16 bits<br>Bit Slave Units: 2 bits |
| Maximum number of nodes per trunk line or sub-trunk line | 32 nodes including Repeater Units |
| Applicable node addresses | Word Slave Units: IN0 to IN63 and OUT0 to OUT63<br>Bit Slave Units: BIT IN0 to BIT IN127 and BIT OUT0 to OUT127<br>Repeater Units: 0 to 63 |

| Item | Specifications |
|---|---|
| Repeater Unit application conditions | Up to 64 Repeater Units can be connected per network (i.e., per Master Unit). Up to 32 Repeater Units can be connected per trunk line or per sub-trunk line. When Repeater Units are connected in series from the Master Unit, up to two extra segment layers can be created (i.e., up to 2 Repeater Units are allowed between a Slave Unit and the Master Unit). |
| Signal lines | Two lines: BDH (communications data high) and BDL (communications data low) |
| Power lines | Two lines: BS+ and BS- (power for communications and internal Slave Unit circuits)<br>• Power is supplied from the Master Unit and Repeater Units. |
| Communications power supply voltage | 24 VDC ±10% |
| Connection forms | Round Cable II, Flat Cable I, or Flat Cable II cables at a baud rate of 93.75 kbps: No restrictions<br>Other cables or other baud rates: Trunk line and branch lines |
| | Connections for Slave Units and Repeater Units: T-branch or multidrop connections |
| Remote I/O communications | Automatic startup when power is turned ON (see note) or manual startup using the Remote I/O Communications Start Switch in I/O Communications Manual Start Mode<br>**Note** When power is turned ON to the PLC and the Slave Unit communications power is turned ON. Communications are not started in the following cases:<br>• In Registered Slave Unit Participation Standby Mode, communications is not started until all registered Slave Units are participating in the network.<br>• In Communications Error Communications Stop Mode, communications stop when a communications error occurs. |
| I/O Communications Manual Startup Mode | I/O Communications Manual Startup Mode can be set from the CX-Integrator so that remote I/O communications are not started when the power is turned ON. Remote I/O communications will not start until the Remote I/O Communications Start Switch is turned ON in memory. |
| Communications Error Communications Stop Mode | All remote I/O communications are stopped if a communications error occurs in any Slave Unit.<br>**Note** Communications will not stop for verification errors for registration tables or duplicated address settings. |
| Communications Error Input Data Zero Clear Mode | All input data will be cleared to zeros in any Slave Unit in which a communications error occurs. |
| Duplicated Slave Unit address check | If the same address is set for two different Slave Units or the same memory is allocated to two different nodes, the Slave Unit that joins communications last will cause a duplicated address error and will leave the network. The Duplicated Address Error Flag will turn ON.<br>**Note** This error will also occur if a Slave Unit leaves the network and then a different type of Slave Unit joins the network. |
| Registration Tables | The Slave Units that can participate for each node address are registered in a table so that only the registered Slave Units can participate. If a different Slave Unit attempts to join the network, the Registration Table Verification Error Flag will turn ON. The Registration Table is generated automatically or manually edited from the CX-Integrator. |

| Item | | Specifications |
|---|---|---|
| Slave Unit status | Without Registration Table | Participation Flag and Communications Error Flag for each Slave Unit<br>• Participation Flag: Turns ON and remains ON if the Slave Unit joins the network even one time after system power is turned ON.<br>• Communications Error Flag: Turns ON if the Slave Unit cannot communicate with the Master Unit for any reason after the Slave Unit has joined the network (i.e., if the Participation Flag is ON). (Turns OFF when the error is removed.)<br>Duplicated Address Error Flags and Alarm Flags |
| | With Registration Table | • Participation Flags and Communications Error Flags for each node address for all Slave Units registered in the Registration Table<br>• Registration Table Verification Error Flags<br>• All Registered Slave Units Participating Flag<br>**Note** The Registered Slave Unit Participation Monitoring Time can be set (verification error check timing).<br>Registered Slave Unit Participation Standby Mode can be set. (Remote I/O communications will not start until all registered Slave Units are participating.) |

## 1-2-1 Cable Types, Maximum Distances, and Number of Slave Units

This section provides specifications on the maximum cable length and the maximum number of connectable Slave Units for each type of cable. The cables and Units must be used within the specifications.

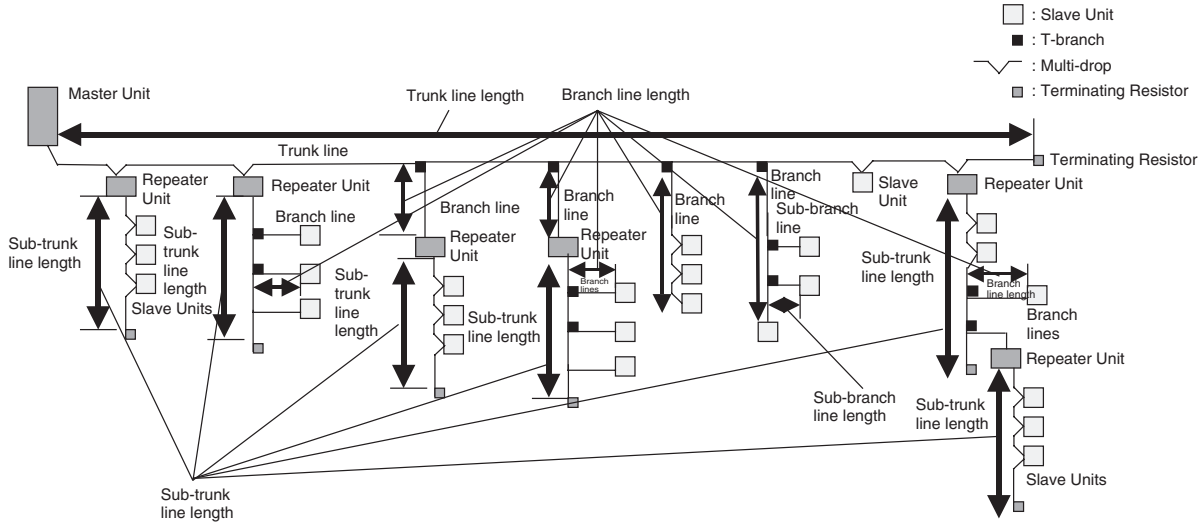


**■ Baud Rate of 4 Mbps (No branching allowed. See note.)**

| Item | Round Cable I or II | Flat Cable I or II |
|---|---|---|
| Length per trunk line or sub-trunk line (maximum length with two Repeater Units) | 30 m (90 m) | 30 m (90 m) |
| Branch line length | Lines cannot be branched from the trunk line. (Only multidrop connections are possible from the trunk line or subtrunk lines.) | |
| Total branch line length | | |
| Restrictions on branch line locations | | |
| Number of Slave Units (including Repeater Units) per trunk line or sub-trunk line | 32 | 32 |

**Note** Bit Slave Units come with Flat Cables and cannot be connected. The network must consist of only Word Slave Units (use DCN4-MD4 Multidrop Connectors for the Flat Cable I or Flat Cable II cables) and multidrop connections must be used.

### ■ Baud Rate of 3 Mbps

| Item | Round Cable I or II | Flat Cable I or II |
|---|---|---|
| Length per trunk line or sub-trunk line (maximum length with two Repeater Units) | 30 m (90 m) | 30 m (90 m) |
| Branch line length | 0.5 m | 0.5 m |
| Total branch line length | 8 m | 8 m |
| Restrictions on branch line locations | 3 branches / m | 3 branches / m |
| Number of Units per branch (See note.) | 1 | 1 |
| Maximum sub-branch line length | Not supported | Not supported |
| Total sub-branch line length | Not supported | Not supported |
| Number of Slave Units (including Repeater Units) per trunk line or sub-trunk line | 32 | 32 |

**Note** The maximum number of nodes per branch is the maximum number of Slave Units or Repeater Units that can be connected to one branch line using multidrop or T-branch connections.

### ■ Baud Rate of 1.5 Mbps

| Item | Round Cable I | | Round Cable II, Flat Cable I, or Flat Cable II |
|---|---|---|---|
| | Without branch lines | With branch lines | |
| Length per trunk line or sub-trunk line (maximum length with two Repeater Units) | 100 m (300 m) | 30 m (90 m) | 30 m (90 m) |
| Branch line length | Not supported (See note 2.) | 2.5 m | 2.5 m |
| Total branch line length | Not supported (See note 2.) | 25 m | 25 m |
| Restrictions on branch line locations | --- | 3 branches / m | 3 branches / m |
| Number of Units per branch (See note 1.) | | 3 | 3 |
| Maximum sub-branch line length | | Not supported | 0.1 m (See note 3.) |
| Total sub-branch line length | | Not supported | 2 m (See note 3.) |
| Number of Slave Units (including Repeater Units) per trunk line or sub-trunk line | 32 | 32 | 32 |

**Note**

(1) This is the maximum number of Slave Units and Repeater Units combined that can be connected to a branch line by using multidrop connections and/or T-branching. T-branching creates a sub-branch.

(2) The trunk line does not support branching. The trunk line and sub-trunk lines support only multidrop connections.

(3) Branch lines support branching to sub-branch lines.

■ **Baud Rate of 93.75 kbps**

| Item | Round Cable I or II | Flat Cable I or II |
|---|---|---|
| Length per trunk line or sub-trunk line(maximum length with two Repeater Units) | 500 m (1500 m) | Unrestricted wiring is enabled for a total length of 200 m. |
| Branch line length | 6 m | |
| Total branch line length | 120 m | |
| Restrictions on branch line locations | 3 branches / m | |
| Number of Units per branch (See note.) | 1 | |
| Maximum sub-branch line length | --- | |
| Total sub-branch line length | --- | |
| Number of Slave Units (including Repeater Units) per trunk line or sub-trunk line | 32 | 32 |

**Note** This is the maximum number of Slave Units and Repeater Units combined that can be connected to a branch line by using multidrop connections and/or T-branching. T-branching creates a sub-branch.

## 1-2-2 Branch Line Support for Cable Types and Baud Rates

Support for branch lines from the trunk line or sub-trunk lines and support for sub-branch lines from branch lines is listed in the following tables.

■ **Baud Rate of 4 Mbps (No Branch Lines)**

| Cable | Branch lines | Sub-branch lines |
|---|---|---|
| Round Cable I | Not supported | Not supported |
| Round Cable II, Flat Cable I, or Flat Cable II | Not supported | Not supported |

**Note** A baud rate of 4 Mbit/s is not supported for branch lines and thus cannot be used for Slave Units with Cables (i.e., Bit Slave Units). The network must consist of only Word Slave Units and DCN4-MD4 Multidrop Connectors must be used for Flat Cable I and Flat Cable II cables.

■ **Baud Rate of 3 Mbps**

| Cable | Branch lines | Sub-branch lines |
|---|---|---|
| Round Cable I | Supported | Not supported |
| Round Cable II, Flat Cable I, or Flat Cable II | Supported | Not supported |

■ **Baud Rate of 1.5 Mbps**

| Cable | | Branch lines | Sub-branch lines |
|---|---|---|---|
| Round Cable I | 100 m max. | Not supported | Not supported |
| | 30 m max. | Supported | |
| Round Cable II, Flat Cable I, or Flat Cable II | | Supported | Supported |

■ **Baud Rate of 93.75 kbps**

| Cable | Branch lines | Sub-branch lines |
|---|---|---|
| Round Cable I | Supported | Not supported |
| Round Cable II, Flat Cable I, or Flat Cable II | Supported (no restrictions) | |

## 1-2-3 Allocating Slave Units in the CPU Unit Memory Area by Communications Mode Number

Slave Unit I/O information and status information is allocated in the Special I/O Unit memory area or a user-specified area of the CPU Unit to which the Master Unit is mounted.

The area is determined by the unit number of the Master Unit as a Special I/O Unit and by the communications mode number. The user specifies the communications mode number using the CX-Integrator. The bits used by Slave Units are determined by the node address for each Slave Unit.

The relationship between communications mode numbers, the number of connected nodes, and the number of points that can be controlled is described next.

### Number of Connected Nodes and Control Points Per Master Unit

Use the rotary switch on the front of the Master Unit to select the communications mode number.

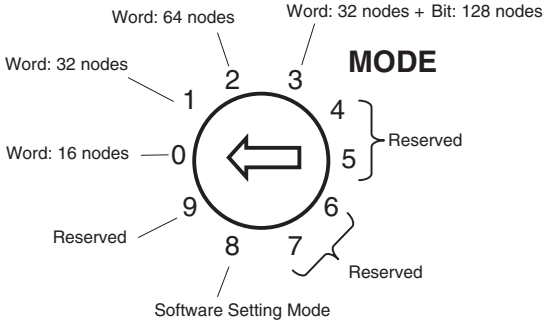


| Communications mode number | Mode name | Connectable node addresses | Control points | Memory area | Number of unit numbers used by each Master Unit |
|---|---|---|---|---|---|
| 0 | Mode 0 | Word Slave Units: IN0 to IN7 and OUT0 to OUT7 | 128 inputs and 128 outputs (Word Slave Units) | Special I/O Unit Area (First word depends on unit number of Master Unit.) | 2 |
| 1 | Mode 1 | Word Slave Units: IN0 to IN15 and OUT0 to OUT15 | 256 inputs and 256 outputs (Word Slave Units) | | 4 |
| 2 | Mode 2 | Word Slave Units: IN0 to IN31 and OUT0 to OUT31 | 512 inputs and 512 outputs (Word Slave Units) | | 8 |
| 3 | Mode 3 | Word Slave Units: IN0 to IN15 and OUT0 to OUT15<br>Bit Slave Units: IN0 to IN63 and OUT0 to OUT63 | 256 inputs and 256 outputs (Word Slave Units)<br>128 inputs and 128 outputs (Word Slave Units) | | 8 |
| 4 | Reserved | --- | --- | --- | --- |
| 5 | Reserved | --- | --- | --- | --- |
| 6 | Reserved | --- | --- | --- | --- |
| 7 | Reserved | --- | --- | --- | --- |
| 8 | Software Setting Mode | Can be set within the following ranges:<br>Word Slave Units: IN0 to IN63 and OUT0 to OUT63<br>Bit Slave Units: IN0 to IN127 and OUT0 to OUT127 | Can be set within the following ranges:<br>Word Slave Units: 1,024 inputs and 1,024 outputs<br>Bit Slave Units: 256 inputs and 256 outputs | Can be allocated anywhere in the CIO, DM, WR, or HR Area.<br>**Note** Status and parameters are allocated in the Special I/O Unit Area. | 1 |
| 9 | Reserved | --- | --- | --- | --- |

**Note** (1) In a CompoNet Network, Word Slave Units have 16 bits per node address. Bit Slave Units have two bits allocated per node address.

(2) Do not use the reserved communications mode numbers (4 to 7 and 9). A communications mode setting error (H4 at the 7-segment LED indicator) will occur if any of these mode numbers is set.

# 1-3 Devices in a CompoNet Network

## 1-3-1 Master Units

### CompoNet Master Units

| Name | Model | Unit classification | Maximum number per CPU Unit | | | Communications Cables (Yes: Can be used. No: Cannot be used.) | | | |
|---|---|---|---|---|---|---|---|---|---|
| | | | | | | Round Cable I | Round Cable II | Flat Cable I | Flat Cable II |
| CS-series Master Unit 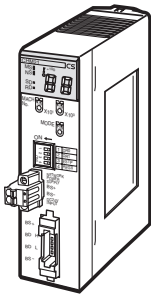 | CS1W-CRM21 | CS-series Special I/O Unit | Communications mode No. | | | Yes (See note 1.) | Yes (See note 1.) | Yes (See note 2.) | Yes (See note 3.) |
| | | | 8 (1 unit number used) | 80 | | | | | |
| | | | 0 (2 unit numbers used) | 48 | | | | | |
| | | | 1 (4 unit numbers used) | 24 | | | | | |
| | | | 2 or 3 (8 unit numbers used) | 12 | | | | | |
| CJ-series Master Unit 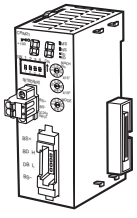 | CJ1W-CRM21 | CJ-series Special | Communications mode No. | CJ1-H/ CJ1 CPU Units | CJ1M CPU Units | Yes (See note 1.) | Yes (See note 1.) | Yes (See note 2.) | Yes (See note 3.) |
| | | | 8 (1 unit number used) | 40 | 20 | | | | |
| | | | 0 (2 unit numbers used) | 40 | 20 | | | | |
| | | | 1 (4 unit numbers used) | 24 | 20 | | | | |
| | | | 2 or 3 (8 unit numbers used) | 12 | 12 | | | | |

**Note** (1) A DCN4-TB4 Open Type Connector is required to connect a Round Cable I or Round Cable II cable to the Unit.

(2) A DCN4-TR4 Flat Connector Socket is required to connect a Flat Cable I cable.

(3) A DCN5-TR4 Flat Connector Socket is required to connect a Flat Cable II cable.

## 1-3-2 Peripheral Devices

### Communications Cables

The following table shows the Communications Cables that can be used in a CompoNet Network.

| Name | Model | Specifications | Remarks |
|---|---|---|---|
| Round Cable I<br>Round Cable II | --- | JIS C 3306<br>Nominal cross-sectional area: 0.75 $mm^2$,<br>Finished conductor diameter: 2.3 mm | Cannot be used with Bit Slave Units. |
| Flat Cable I<br> 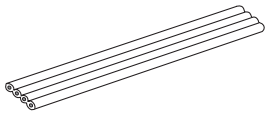 | DCA4-4F10 | Standard 4-conductor flat cable (UL2555)<br>Length: 100 m<br>Conductor diameters:<br>0.75 $mm^2 \times 2$, 0.5 $mm^2 \times 2$ | Approximately 50 cm of cable comes connected to IP20 Bit Slave Units. |
| Flat Cable II<br> 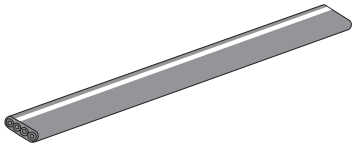 | DCA5-4F10 | Sheathed 4-conductor flat cable<br>Length: 100 m<br>Conductor diameters:<br>0.75 $mm^2 \times 2$, 0.5 $mm^2 \times 2$ | Approximately 50 cm of cable comes connected to IP54 Bit Slave Units. |

### Flat Connectors

In a CompoNet Network, the connectors described below can be connected to the Communications Cable to enable extending the cable length, branching cables, and wiring to Slave Units.

#### Flat Connector Socket

■ **Flat Cable I**

| Name | Model | Appearance | Application | Communications Cables (Yes: Can be used. No: Cannot be used.) | | | |
|---|---|---|---|---|---|---|---|
| | | | | Round Cable I | Round Cable II | Flat Cable I | Flat Cable II |
| Flat Connector Socket | DCN4-TR4 | 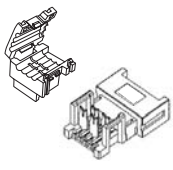 | Use this Connector in a set with a DCN4-BR4 Flat Connector Plug for the following applications.<br>• Extending the trunk line or a sub-trunk line<br> 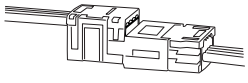 <br>• T-branching from the trunk line or a sub-trunk line<br>• T-branching a sub-branch line from a branch line<br> 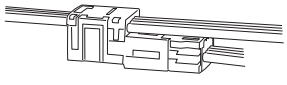 | No | Yes (See note.) | Yes | No |

**Note** The only case when the Socket is used with a Round Cable II is to connect the Cable to a Terminating Resistor.

■ **Flat Cable II**

| Name | Model | Appearance | Application | Communications Cables (Yes: Can be used. No: Cannot be used.) | | | |
|---|---|---|---|---|---|---|---|
| | | | | Round Cable I | Round Cable II | Flat Cable I | Flat Cable II |
| Flat Connector Socket | DCN5-TR4 | 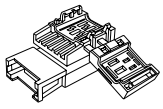 | Use this Connector in a set with a DCN5-BR4 Flat Connector Plug for the following applications.<br>• Extending the trunk line or a sub-trunk line<br>• T-branching from the trunk line or a sub-trunk line<br>• T-branching a sub-branch line from a branch line<br>**Note** Use the Connector to connect IP54 Bit Slave Units. | No | No | No | Yes |

**Flat Connector Plug**

■ **Flat Cable I**

| Name | Model | Appearance | Application | Communications Cables (Yes: Can be used. No: Cannot be used.) | | | |
|---|---|---|---|---|---|---|---|
| | | | | Round Cable I | Round Cable II | Flat Cable I | Flat Cable II |
| Flat Connector Plug | DCN4-BR4 | | a. Use the Connector in a set with a DCN4-TR4 Flat Connector Socket for the following applications.<br>• Extending the trunk line or a sub-trunk line<br>• T-branching from the trunk line or a sub-trunk line<br>• T-branching a sub-branch line from a branch line<br>b. Use this Connector independently for the following applications.<br>• Connecting Communications Cable to a Master Unit, Word Slave Unit, or Repeater Unit<br>• Connecting Communications Cable to a Multi-wiring Connector | No | No | Yes | No |

**Note** Although this product is called a Flat Connector Plug, it can be used as a connector to connect a Master Unit, Slave Unit, or Repeater Unit.

■ **Flat Cable II**

| Name | Model | Appearance | Application | Communications Cables (Yes: Can be used. No: Cannot be used.) | | | |
|---|---|---|---|---|---|---|---|
| | | | | Round Cable I | Round Cable II | Flat Cable I | Flat Cable II |
| Flat Connector Plug | DCN5-BR4 | 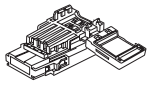 | a. Use this Connector in a set with a DCN5-TR4 Flat Connector Socket for the following applications.<br>• Extending the trunk line or a sub-trunk line<br>• T-branching from the trunk line or a sub-trunk line<br>• T-branching a sub-branch line from a branch line<br>b. Use this Connector independently for the following applications.<br>• Connecting Communications Cable to a Master Unit, Word Slave Unit, or Repeater Unit<br>• Connecting Communications Cable to connectors for wiring<br>**Note** Use for connecting IP54 Bit Slave Units. | No | No | No | Yes |

**Note** Although this product is called a Flat Connector Plug, it can be used as a connector to connect a Master Unit, Slave Unit, or Repeater Unit.

**Multi-wiring Connector**

| Name | Model | Appearance | Application | Communications Cables (Yes: Can be used. No: Cannot be used.) | | | |
|---|---|---|---|---|---|---|---|
| | | | | Round Cable I | Round Cable II | Flat Cable I | Flat Cable II |
| Multi-wiring Connector | DCN4-MD4 | 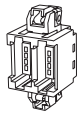 | This Connector connects two Flat Connector Plugs to two ports.<br>Use Multi-wiring Connectors for multi-drop wiring of Master Units, Slave Units, or Repeater Units to trunk lines, sub-trunk lines, or branch lines.<br>**Note** When the baud rate is 4 Mbps (mainly when Flat Cable is used), use this Connector to connect to Word Slave Units only. | No | No | Yes | No |

## Special Tools

| Name | Model | Appearance | Application | Communications Cables (Yes: Can be used. No: Cannot be used.) | | | |
|---|---|---|---|---|---|---|---|
| | | | | Round Cable I | Round Cable II | Flat Cable I | Flat Cable II |
| Special Tool (Pliers) | DWT-A01 | 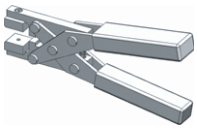 | A pressure welding tool for DCN4-TR4 Flat Connector Socket and a DCN4-BR4 Flat Connector Plug. | No | Yes (See note.) | Yes | No |
| Special Tool (Pliers) | DWT-A02 | 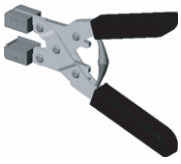 | A pressure welding tool for DCN5-TR4 Flat Connector Socket and a DCN5-BR4 Flat Connector Plug. | No | No | No | Yes |

**Note** The only case when the Special Tool is used with a Round Cable II cable is to connect the Cable to a Terminating Resistor.

## Open Type Connector

| Name | Model | Appearance | Application | Communications Cables (Yes: Can be used. No: Cannot be used.) | | | |
|---|---|---|---|---|---|---|---|
| | | | | Round Cable I | Round Cable II | Flat Cable I | Flat Cable II |
| Open Type Connector | DCN4-TB4 | 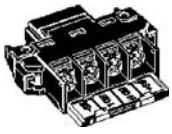 | Converts the communications connector on a Unit to a screw terminal block to enable connecting a Round Cable I or II cable to a Slave Unit or Repeater Unit. | Yes | Yes | No | No |

## Terminating Resistors

| Name | Model | Appearance | Application | Communications Cables (Yes: Can be used. No: Cannot be used.) | | | |
|---|---|---|---|---|---|---|---|
| | | | | Round Cable I | Round Cable II | Flat Cable I | Flat Cable II |
| Terminating Resistor | DCN4-TM4 | | Connector-type Terminating Resistor for a Round Cable II or Flat Cable I cable. Connect this Terminating Resistor to a Flat Connector Socket (DCN4-TR4) on the end of the trunk or sub-trunk line. | No | Yes | Yes | No |
| | DCN5-TM4 | 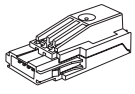 | Connector-type Terminating Resistor for a Flat Cable II cable. Connect this Terminating Resistor to a Flat Connector Socket (DCN5-TR4) on the end of the trunk or sub-trunk line. | No | No | No | Yes |
| | DRS1-T | 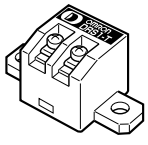 | Terminal block-type Terminating Resistor for a Round Cable I cable. Connect this Terminating Resistor to the end of the trunk or sub-trunk line. | Yes | No | No | No |

## 1-3-3 Selecting Peripheral Devices Used According to Connection Configuration

**Flat Cable I, Round Cable I, or Round Cable II**

| Connection configuration | | | Peripheral Devices used |
|---|---|---|---|
| Connecting the Master Unit | | Connecting the trunk line to the Master Unit | Flat Connector Plug (DCN4-BR4) only, or Open Type Connector (to connect Units to the Cable) (DCN4-TB4) |
| Connecting Slave Units or Repeater Units | | Connecting branch lines or sub-branch lines to Slave Units or Repeater Units | Flat Connector Plug (DCN4-BR4) only, or Open Type Connector (to connect Units to the Cable) (DCN4-TB4) |
| Branching | T-branching | T-branching from a trunk or sub-trunk line | Flat Connector Socket (DCN4-TR4) with Flat Connector Plug (DCN4-BR4) as a set, or commercially available terminal blocks |
| | | T-branching a sub-branch line from a branch line | |
| | Multi-drop branching | Multi-drop branching of the trunk line or a sub-trunk line | Open Type Connector (to connect Units to the Cable) (DCN4-TB4), or Multidrop Connector (DCN4-MD4) |
| | | Multi-drop branching of a branch line or sub-branch line | |
| Extending the line length | | Extending the trunk line or a sub-trunk line | Flat Connector Socket (DCN4-TR4) with Flat Connector Plug (DCN4-BR4) as a set |
| | | Extending a branch line | |
| Terminating Resistor | | Installing Terminating Resistors on trunk lines or sub-trunk lines | Terminating Resistor (DCN4-TM4 or DRS1-T) |

**Flat Cable II**

| Connection configuration | | | Peripheral Devices used |
|---|---|---|---|
| Connecting the Master Unit | | Connecting the trunk line to the Master Unit | Flat Connector Plug (DCN5-BR4) only, or Open Type Connector (to connect Units to the Cable) (DCN4-TB4) |
| Connecting Slave Units or Repeater Units | | Connecting branch lines or sub-branch lines to Slave Units or Repeater Units | Flat Connector Plug (DCN5-BR4) only, or Open Type Connector (to connect Units to the Cable) (DCN4-TB4) |
| Branching | T-branching | T-branching from a trunk or sub-trunk line | Flat Connector Socket (DCN5-TR4) with Flat Connector Plug (DCN5-BR4) as a set |
| | | T-branching a sub-branch line from a branch line | |
| Extending lines | | Extending the trunk line or a sub-trunk line | Flat Connector Socket (DCN5-TR4) with Flat Connector Plug (DCN5-BR4) as a set |
| | | Extending a branch line | |
| Terminating Resistor | | Installing Terminating Resistors on trunk lines or sub-trunk lines | Terminating Resistor (DCN5-TM4) |

# 1-4 Overview of Design Flow

Perform the following steps to design the system.

**1. Determine the number of I/O points.**

Determine the number of I/O points in the entire system.

...Refer to *1-2 CompoNet Network Specifications* and *1-3 Devices in a CompoNet Network*.

▼

**2. Match up the I/O points with specific Slave Units.**

Determine the specific Slave Unit for each input and output.

▼

**3. Determine the number of nodes.**

Determine how many nodes are to be connected.

▼

**4. Determine the layout.**

...Refer to *SECTION 3 Wiring Configurations*.

- Determine the wiring form (trunk line-branch lines or unrestricted branching).
- Determine the wiring distances.
- Determine the method for providing communications and I/O power supplies to the Slave Units (with minimal wiring).
- Determine the type of cable to be used.

▼

**5. Temporarily determine the communications mode number and the baud rate.**

**Note** Branching is not possible at a baud rate of 4 Mbps, so Bit Slave Units with Flat Cable cannot be used.

...Refer to *5-3 Remote I/O Communications Performance*.

▼

**6. Determine the communications cycle.**

The communications cycle is determined from the communications mode number and the baud rate.
(With communications mode 8, it also depends on the type and number of Slave Units.)

Determine whether the required I/O response time can be achieved at that baud rate.

▼

**7. Consider using more than one Master Unit.**

If the desired distance and communications cycle cannot both be achieved even after rechecking the communications mode number, the baud rate, and the use of Repeater Units, then use more than one Master Unit.

# 1-5 Overview of Operating Procedure

Follow the steps below to install and use a CompoNet Network.

**1. Install and wire the system.** ... *SECTION 4 Installation and Wiring*

Wire the network, the communications power supply, and the I/O power supply.

▼

**2. Select the communications mode number on the front of the Master Unit.** ...*SECTION 2 Master Units*

Set the communications mode number to 0, 1, 2, 3, or 8.

▼

**3. Make the following settings on the DIP switch on the front of the Master Unit.**

SW1 (DR0) and SW2 (DR1): Set the baud rate.

SW3 (ESTP): Set whether communications are to stop when an error occurs.

SW4 (REGS): Enable or disable the Registration Table.

▼

**4. Set the unit number on the front of the Master Unit.**

Set a number from 0 to 95.

▼

**5. Set the Slave Unit node addresses.**

Set a node addresses from 0 to 63 for Word Slave Units and from 0 to 127 for Bit Slave Units.

▼

**6. Connect the computer running the CX-Integrator to the PLC where the Master Unit is mounted.** ...CX-Integrator Operation Manual

▼

**7. Turn ON the power to the PLC.**

▼

**8. Using the CX-Integrator, edit and download the Master Unit device parameters.**

1. Connect online to the PLC where the Master Unit is mounted.
2. In the Online Connection Information Window, right-click the Master Unit under the connected PLC, and then select Connect.
3. Right-click the Master Unit under the connected PLC, and select Transfer [Network to Computer].
4. Double-click the Master Unit in the Network Configuration Window, and then edit and download the device parameters.

▼

**9. Turn OFF the power to the PLC.**

▼

**10. Remote I/O communications will start when all registered Slave Units are participating.**

▼

**11. Using the CX-Integrator, monitor the participation status of the Slave Units.**

1. While online, upload the network configuration.
2. Right-click the Master Unit in the Network Configuration Window and select Monitor to monitor the participation status on the Status/Unit Status Tab Page.

# 1-6 Design and Operating Procedure Examples

## 1-6-1 Design

**I/O Capacity**

Establish the I/O correspondences for each Slave Unit. Determine how many Word and Bit Slave Units are to be connected, and calculate the current consumption for the communications power supply.

**■ Units Used**

| I/O capacity | Slave Unit type | Model (specifications) | Number of Units | Current consumption (See note 1.) |
|---|---|---|---|---|
| 16 inputs | Word Slave Units | CRT1-ID16 (16 DC inputs, NPN) | 1 | 85 mA |
| 16 inputs and 8 outputs | | CRT1-ID16 (16 DC inputs, NPN) + XWT-OD08 (8 transistor outputs, NPN) | 1 of each | 85 mA + 5 mA = 90 mA |
| 16 outputs | | CRT1-OD16 (16 transistor outputs, NPN) | 1 | 85 mA |
| 2 inputs × 2 | Bit Slave Units | CRT1B-ID02S (2 DC inputs, sensor connector type, NPN) | 2 | 80 mA + I/O current consumption 76 mA (Sensor example: 35 mA × 2 + input current 3 mA × 2) (See note 2.)<br>**Note** The total for two Units is 160 mA + 152 mA. |
| 2 outputs | | CRT1B-OD02S (2 transistor outputs, sensor connector type, NPN) | 1 | 75 mA + I/O current consumption 160 mA (actuator)<br>Example: 80 mA × 2 (See note 2.) |
| | | | Total | 495 mA + 312 mA for I/O = 807 mA |

**Note**

(1) Refer to the *CRT1-series CompoNet Slave Units and Repeater Unit Operation Manual* (Cat. No. W456) for the current consumption of the Slave Units.

(2) When Bit Slave Units are used, the current consumption of the Bit Slave Units and the external I/O, such as sensors and actuators, is supplied from the communications power supply that is connected to the Master Unit through the Flat Cable. Therefore, the current consumption of the following external I/O must be added to the total power consumption.
Sensor current consumption × 2, actuator current consumption × 2
Word Slave Units × 3 nodes, Bit Slave Units × 3 nodes
At the same time, provide a 24-VDC power supply with an output current of at least 0.9 A for the communications power supply.

**■ Required Peripheral Devices**

| Specifications | Model | Quantity | Remarks |
|---|---|---|---|
| Flat Connector Socket | DCN4-TR4 | 7 | Order in units of ten. |
| Flat Connector Plug | DCN4-BR4 | 10 | Order in units of ten. |
| Terminating Resistor | DCN4-TM4 | 1 | Order in units of ten. |
| Flat Cable I | DCA4-4F10 | 1 | Order in increments of 100 m. |
| Special Tool (Pliers) | DWT-A01 | 1 | --- |

### System Configuration

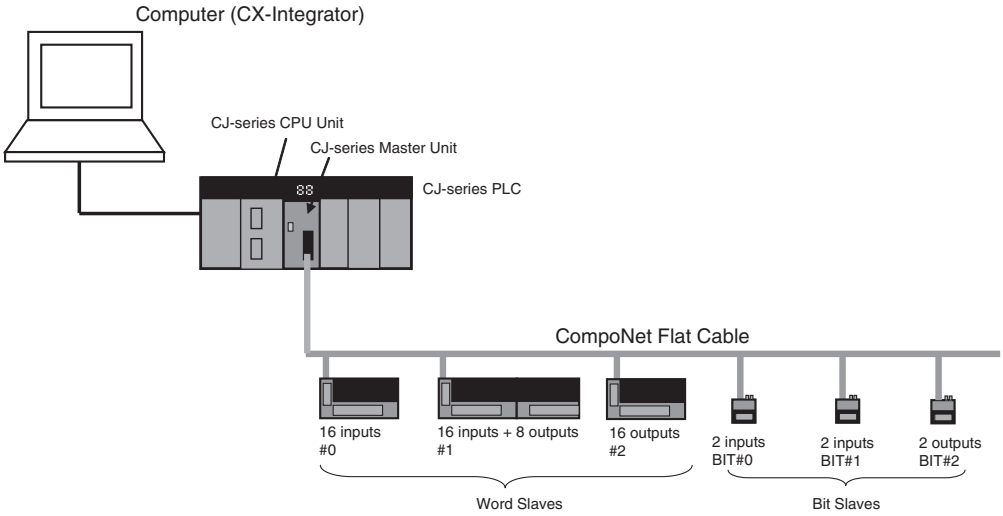


**Layout**

- Wiring form: Branching from trunk line to branch lines, with no sub-branch lines
- Wiring distance: 30 m or less, so any cable type or baud rate is acceptable.
- Communications Power Supply to Slave Units: Supplied to all collectively.

| Cable type | | | Round Cable I | | | | | Round Cable II, Flat Cable I, or Flat Cable II | | | |
|---|---|---|---|---|---|---|---|---|---|---|---|
| Baud rate | | | 4 Mbps | 3 Mbps | 1.5 Mbps | | 93.75 kbps | 4 Mbps | 3 Mbps | 1.5 Mbps | 93.75 kbps |
| Wiring form | No branch lines | | All can be used. | | | | | | | | |
| | With branch lines | Without sub-branch lines (branch line extension) | Not supported. | Supported (0.5 m). | Not supported. | Supported (2.5 m) | Supported (6 m). | Not supported. | Supported (0.5 m). | Supported (2.5 m). | Supported (unrestricted branching). |
| | | With sub-branch lines | Not supported. | | | | | Not supported. | | Supported (2.5 m). | Supported (unrestricted branching). |
| Maximum length for trunk lines and sub-trunk lines | | | 30 m | | 100 m | 30 m | 500 m | 30 m | | | 200 m (unrestricted branching) |

■ **Remarks**

**Wiring Form**

- When there is no branching, any combination of cable types and baud rates are supported.
- When there is a branch, Round Cable I, Round Cable II, Flat Cable I and Flat Cable II cables cannot be used at a baud rate of 4 Mbps. This means you cannot use a Bit Slave Unit with a pre-attached cable at 4 Mbps. When a Round Cable I cable is used at a baud rate of 1.5 Mbps, the trunk line and the sub-trunk line must be no longer than 30 m.
- When a branch line has a sub-branch line, Round Cable II, Flat Cable I, or Flat Cable II cables must be used either at a baud rate of 1.5 Mbps or 93.75 kbps.

**Maximum Length for Trunk Lines and Sub-trunk Lines**

- When the lines are 30 m or less: Any combination of cable types and baud rates is supported.
- When a distance longer than 30 m is required:
  - Round Cable I: The baud rate must be 1.5 Mbps, with no branching. (The cable length can be up to 100 m.)
  - Round Cable II, Flat Cable I, or Flat Cable II: The baud rate must be 93.75 bits/s. (The cable length can be up to 200 m when unrestricted branching is used.)

**Types of Cables**

Flat Cable is used in this example, because IP20 Bit Slave Units are used and the communications power supply is provided collectively through the communications cables.

| Item | | | Cable type | | | |
|---|---|---|---|---|---|---|
| | | | **Round Cable I** | **Round Cable II** | **Flat Cable I** | **Flat Cable II** |
| **Application** | | | Wiring the Slave Units between the Master Unit and a Repeater Unit and wiring the Slave Units downstream from a Repeater Unit | | | |
| | | | • To wire with commercially available cable.<br>• To supply communications power separately.<br>• When Bit Slave Units are not used. | • To wire with commercially available cable<br>• To supply the communications power collectively via the communications cable.<br>• When Bit Slave Units are not used. | • To use the communications cable and the communications power to supply power to all Slave Units.<br>• When an IP20 Bit Slave Unit is used. | • To use the communications cable and the communications power to supply power to all Slave Units.<br>• When an IP54 Bit Slave Unit is used.<br>• To use in an environment conforming to IP54 (splash-proof and drip-proof.) |
| **Applicable Slave Units** | **Word Slave Units** | | Supported | | | |
| | **Bit Slave Units** | **IP20 Bit Slave Units** | Not supported. (See note.)<br>**Note** Round Cables cannot be used with Bit Slaves. Flat Cables are pre-connected to all Bit Slaves. | | Supported | Not supported |
| | | **IP54 Bit Slave Units** | | | Not supported | Supported |
| **Communications power supply** | | | Wired separately from the communications cable. | Supplied via communications cable. (Power is supplied from the Master Unit and Repeater Units.) | | |
| **Condition to use different types of cables together** | | | When a Repeater Unit is used, two different types of cables can be used (two of Round Cable I, Round Cable II, Flat Cable I, and Flat Cable II): one for the upstream port and the other for the downstream port.<br>In other cases, all cables on the trunk line, a sub-trunk line, a branch line, or a sub-branch line must be the same type. | | | |
| **Master Unit position** | | | Only at the end of trunk line | At baud rate of 93.75 kbps: Anywhere in the network<br>At other baud rates: Only at the end of trunk line | | |
| **Branch lines** | | | At 4 Mbps: Not supported<br>At other baud rates: Supported | At 93.75 kbps: Unrestricted wiring<br>At 4 Mbps: Not supported<br>At other baud rates: Supported | | |
| **Branching from branch lines Multi-wiring** | **Multidrop connections on branch lines** | | At 1.5 Mbps: Supported (up to 3 connectors per branch line) | At 93.75 kbps: Unrestricted wiring<br>At 1.5 Mbps: Supported (up to 3 connectors per branch line) | | Not supported |
| | **Sub-branch lines** | | Not supported | At 93.75 kbps: Unrestricted wiring<br>At 1.5 Mbps: supported (up to 3 connectors per branch line) | | |

| Item | | Cable type | | | |
|---|---|---|---|---|---|
| | | **Round Cable I** | **Round Cable II** | **Flat Cable I** | **Flat Cable II** |
| **Communications distance** | **4 Mbps** | Length of the trunk line or a sub-trunk line: 30 m max | | | |
| | **3 Mbps** | Length of the trunk line or a sub-trunk line: 30 m max | | | |
| | **1.5 Mbps** | Length of the trunk line or a sub-trunk line: 100 m max. when there is no branching, 30 m max. when there is branching | Length of the trunk line or a sub-trunk line: 30 m max | | |
| | **93.75 kbps** | Length of the trunk line or a sub-trunk line: 500 m max | Total wiring length: 200 m max | | |

**Unit Number**

Unit number 5 is used.

**Communications Mode Number and Baud Rate**

- Communications mode number: 3 (Mode 3 is selected because Word Slave Units and Bit Slave Units are used.) Memory can be allocated in the Special I/O Unit portion of the CIO Area, so a CX-Integrator setting is not required.
- Baud rate: 3 Mbps (Branch lines are used, but not sub-branch lines. Also, this baud rate can be used with a maximum trunk line length of 30 m.)

**Communications Cycle Time**

The communications cycle time is 2.5 ms, at a baud rate of 3 Mbps in communications mode 3. Base calculations on a communications cycle time of 2.5 ms. (For details on I/O response times, refer to *5-3 Remote I/O Communications Performance*.)

| Slave Unit type and maximum number of nodes | Baud rate Communications mode No. | Communications cycle time (with message communications) | | | |
|---|---|---|---|---|---|
| | | **4 Mbps** | **3 Mbps** | **1.5 Mbps** | **93.75 kbps** |
| Word Slave Units, max. 8 nodes input and 8 nodes output | 0 | 0.9 ms | 0.9 ms | 1.5 ms | 19.8 ms |
| Word Slave Units, max. 16 nodes input and 16 nodes output | 1 | 1.0 ms | 1.2 ms | 2.3 ms | 30.2 ms |
| Word Slave Units, max. 32 nodes input and 32 nodes output | 2 | 1.3 ms | 1.7 ms | 4.0 ms | 51.3 ms |
| Word Slave Units, max. 16 nodes input and 16 nodes output; Bit Slave Units, max. 64 nodes input and 64 nodes output | 3 | 2.0 ms | 2.5 ms | 5.9 ms | 72.1 ms |
| Word Slave Units, max. 64 nodes input and 64 nodes output; Bit Slave Units, max. 128 nodes input and 128 nodes output | 8 | 0.79 ms + added time for number of and types of Slave Units | 0.85 ms + added time for number of and types of Slave Units | 1.94 ms + added time for number of and types of Slave Units | 24.81 ms + added time for number of and types of Slave Units |

**Note** When less than the maximum number of nodes is used, the communications cycle time is progressively shortened as the communications mode number becomes smaller and as the baud rate is increased.

**Registration Tables**

Registration tables are used.

- Registered Slave Unit Participation Standby Mode

**Communications Error Communications Stop Mode**

These are enabled.

## I/O Allocations

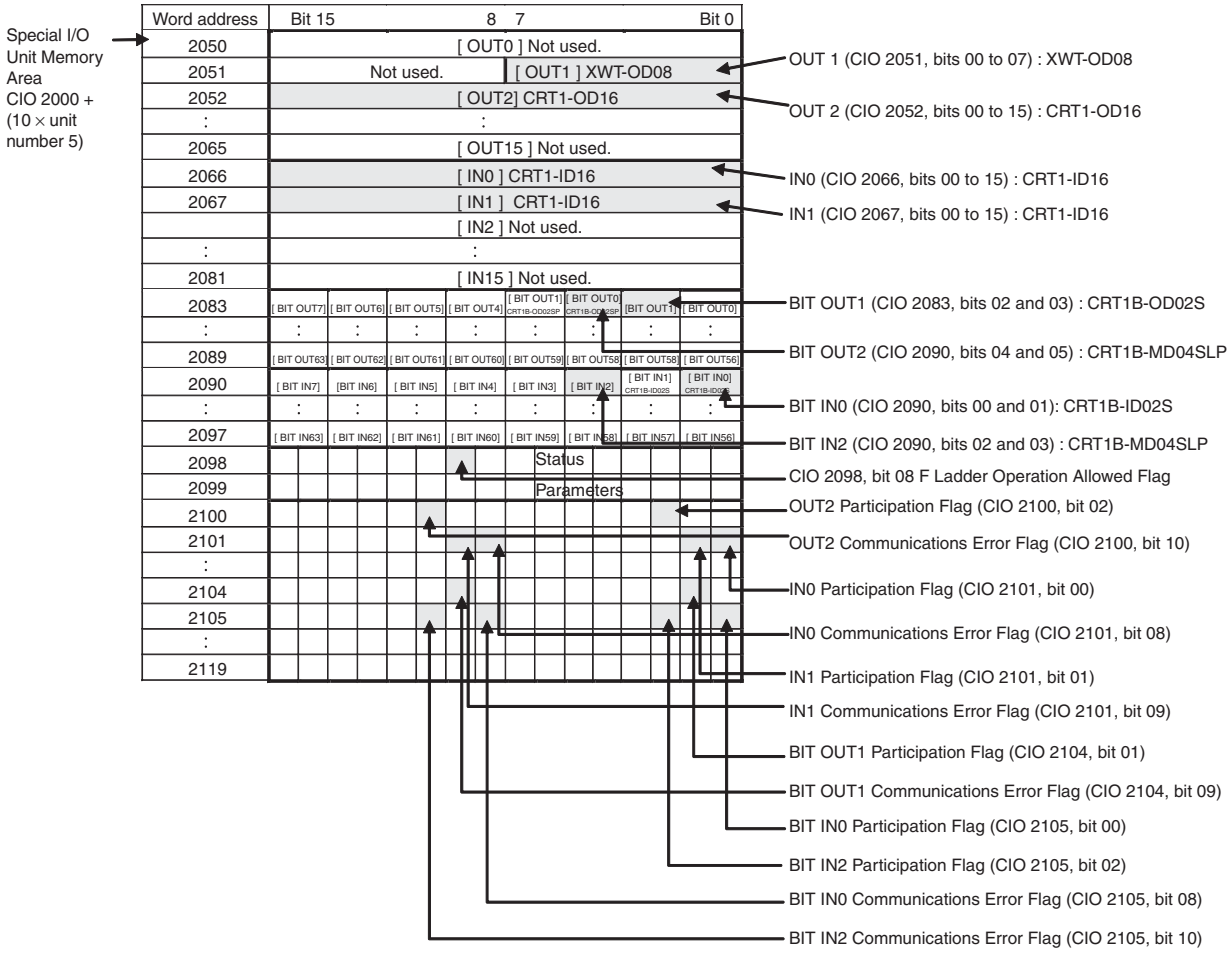


## Ladder Programming Example

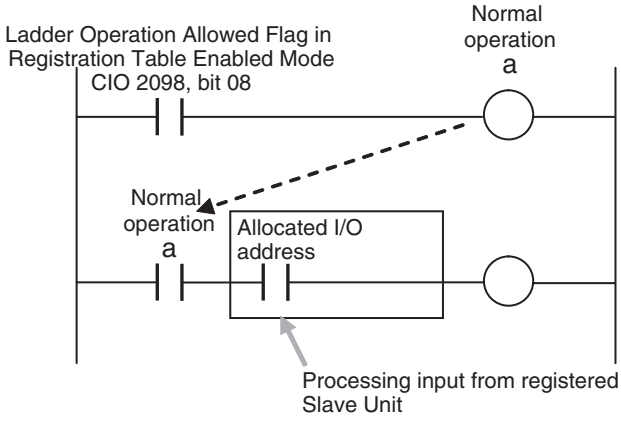

## 1-6-2 Operating Procedure

***1,2,3...*** 1. Perform the installation and wiring.

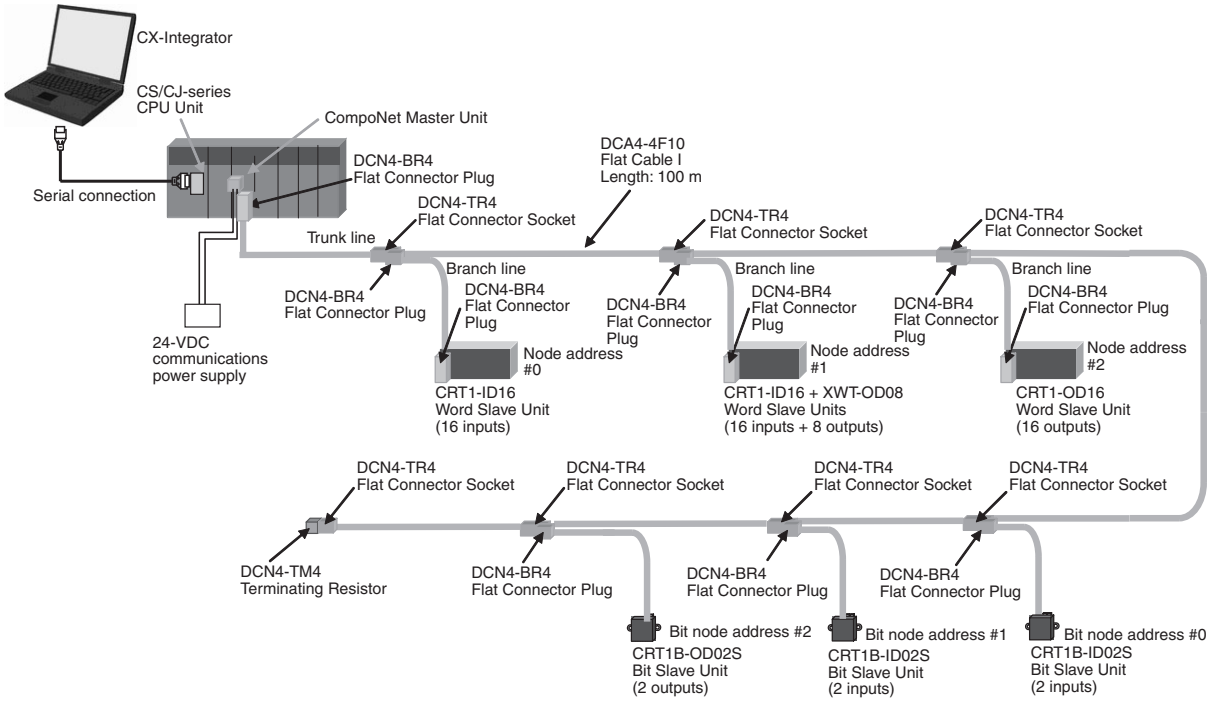


2. Set the communications mode number on the front of the Master Unit (example: 3).

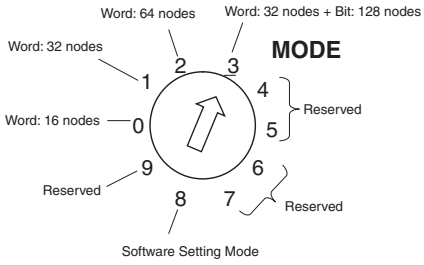


3. Set the DIP switch on the front of the Master Unit as follows:

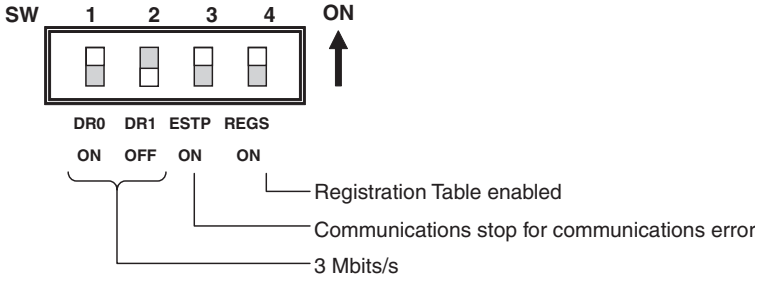


- Baud Rate Setting

| SW1 | SW2 | Setting |
|---|---|---|
| DR0 | DR1 | |
| OFF | OFF | 4 Mbps (default) |
| ON | OFF | 3 Mbps |
| OFF | ON | 1.5 Mbps |
| ON | ON | 93.75 kbps |

- Communications Error Communications Stop Mode (Stopping All Remote I/O Communications when a Communications Error Occurs in One Slave Unit) and Registration Table Enable Setting

| SW | Name | ON | OFF |
|---|---|---|---|
| 3 | ESTP (Communications Error Communications Stop Mode) | Communications stop when a communications error occurs. | Communications do not stop when a communications error occurs. |
| 4 | REGS (Registration Table Enable Setting) | Registration Table enabled. | Registration Table disabled. |

4. Set the unit number on the front of the Master Unit.
   The unit number is set to 5 in this example. Therefore the first address is CIO 2050.
5. Set the Slave Unit node addresses.

| Model | Node address |
|---|---|
| CRT1-ID16 | Node address #0 |
| CRT1-ID16 + XWT-OD08 | Node address #1 |
| CRT1-OD16 | Node address #2 |
| CRT1B-ID02S | Bit node address #0 |
| CRT1B-ID02S | Bit node address #1 |
| CRT1B-OD02S | Bit node address #2 |

6. Connect the CX-Integrator to the CPU Unit's serial communications port.
7. Turn ON the power to the PLC.
8. Connect the CX-Integrator online and edit and download the Master Unit device parameters.
   (1) Connect online to the PLC where the Master Unit is mounted.
   (2) In the Online Connection Information Window, right-click the Master Unit under the connected PLC, and then select Connect.
   (3) Right-click the Master Unit under the connected PLC, and select Transfer [Network to Computer].

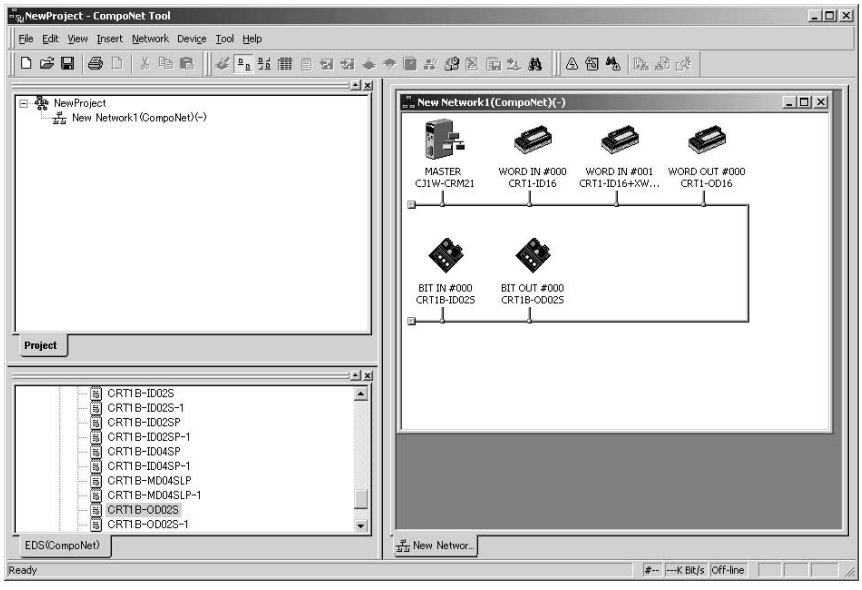


   (4) Double-click the Master Unit in the Network Configuration Window. Then, on the General Master Unit Tab Page, select the Slave Units to be registered and create a Registration Table.

(5) Open the Detailed Settings Dialog Box and enable the Registered Slave Unit Participation Standby Mode.

(6) Click the Download Button to download the Master Unit device parameters.

9. Cycle the power to the PLC.
10. Remote I/O communications will start when all registered Slave Units have started participating.

**MS and NS Indicators**

- Normal Operation

| LED | Status | Contents | |
|---|---|---|---|
| MS | Lit green | Master Unit normal | Power is being supplied and the Master Unit hardware and settings are normal. |
| NS | Lit green | Remote I/O communications normal | Power is being supplied, remote I/O communications have started, there are no communications errors at any Slave Unit or Repeater Unit, there are no Registration Table errors, and there are no node address duplication errors for Slave Units or Repeater Units. |

- Error Operation

| LED | Status | Contents | |
|---|---|---|---|
| MS | Flashing red | Non-fatal error | Communications mode number or unit number setting error |
| | Lit red | Fatal error | Hardware error |
| NS | Flashing green | I/O communications stopped | Remote I/O communications have not started or have stopped (for a reason other than a communications error). |
| | Flashing red | Communications error | A communications error has occurred for one or more Slave Units or Repeater Units.<br>A verification error (non-existent or unregistered Slave Unit) has occurred for one or more Slave Units.<br>Communications have stopped due to a communications error.<br>An illegal configuration error (number of Repeater Units) has occurred.<br>An address duplication error has occurred at one or more Slave Units or Repeater Units. |
| | Lit red | Address duplication error | An error has occurred in the communications circuit. |

**Indicators and Seven-segment Display**

• Normal Operation

| Indicators | Status | Display | Seven-segment display | Contents |
|---|---|---|---|---|
| _0 to _3 lit | Remote I/O communications are starting. | _0 | _0 | 4 Mbps |
| | | _1 | _1 | 3 Mbps |
| | | _2 | _2 | 1.5 Mbps |
| | | _3 | _3 | 93.75 kbps |

• Error Operation

| Indicators | Status | Seven-segment display | | | | Contents |
|---|---|---|---|---|---|---|
| _0 to _3 lit | Remote I/O communications are not starting. | _0 | | | _0 | 4 Mbps |
| | | _1 | | | _1 | 3 Mbps |
| | | _2 | | | _2 | 1.5 Mbps |
| | | _3 | | | _3 | 93.75 kbps |
| d9 - i/o/bi/bo/r - Node address | A communications error has occurred. | d9 | d9 | i | i | Input |
| | | | | o | o | Output |
| | | | | bi | bi | Bit input |
| | | | | bo | bo | Bit output |
| | | | | r | r | Repeater Unit |
| d0 - i/o/bi/bo/r - Node address | The same address is being used by two different Units. | d0 | d0 | Same as above. | | |
| d5 - i/o/bi/bo/r - Node address | A non-existent Slave Unit verification error has occurred. | d5 | d5 | Same as above. | | |
| d6 - i/o/bi/bo/r - Node address | An unregistered Slave Unit verification error has occurred. | d6 | d6 | Same as above. | | |
| A0 | Communications have stopped due to a communications error. | A0 | A0 | --- | | |
| E4 | Software set data is illegal. | E4 | E4 | --- | | |
| E8 | Registered Table data is illegal. | E8 | E8 | --- | | |

11. Using the CX-Integrator, monitor the participation status of Slave Units.

    (1) While online, upload the network configuration.

    (2) Right-click the Master Unit in the Network Configuration Window, and select Monitor.

    (3) Monitor Slave Unit participation status on the Slave Status Tab Page.

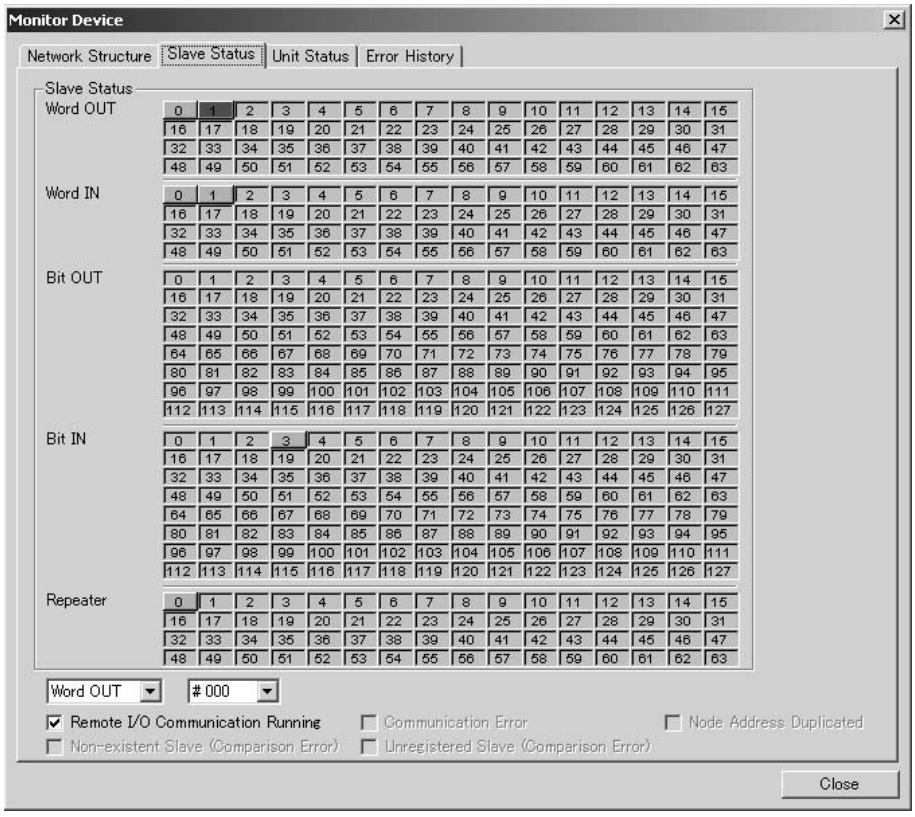


A list of node addresses will be displayed showing the participation status for each node: participating (blue), disconnected (red), or not participating (gray).

    (4) Monitor the status of all Master Unit communications on the Unit Status Tab Page.

# SECTION 2
# Master Units

This section provides the specifications of the CompoNet Master Units


2-1 Master Unit Specifications . . . . . 34
2-1-1 Specifications . . . . . 34
2-1-2 Component Names and Functions . . . . . 35
2-1-3 Display Section . . . . . 37
2-1-4 Switch Settings . . . . . 39
2-1-5 Terminal Arrangement . . . . . 40
2-1-6 Dimensions . . . . . 42

# 2-1 Master Unit Specifications

## 2-1-1 Specifications

| Item | Specification | |
|---|---|---|
| Model | CS1W-CRM21 | CJ1W-CRM21 |
| Applicable PLC | CS Series | CJ Series |
| Unit classification | CS-series Special I/O Unit | CJ-series Special I/O Unit |
| Current consumption (Power supplied from PLC's Power Supply Unit) | 400 mA max. at 5 VDC | 400 mA max. at 5 VDC |
| Weight | 190 g max. (Master Unit only) | 130g max. (Master Unit only) |
| Communications power supply connector | When a Round Cable II, Flat Cable I, or Flat Cable II cable is used, 1 communications power supply connector must be provided for Slave Units or Repeater Units on the trunk line.<br>**Note** The Master Unit does not require a communications power supply. | |
| Allowable current capacity for a communications power supply connector | 5 A max (UL rating: 4A)<br>If your devices must conform to the UL Standard, the allowable current capacity is 4 A max. | |
| Maximum number of mountable Master Units | One word number assigned: 80 Units<br>Two word numbers assigned: 48 Units<br>Four word numbers assigned: 24 Units<br>Eight word numbers assigned: 12 Units | One word number assigned: 40 Units<br>Two word numbers assigned: 40 Units<br>Four word numbers assigned: 24 Units<br>Eight word numbers assigned: 12 Units |
| Mounting location | According to CS/CJ-series Special I/O Unit specifications. | |
| Communications power ON/OFF monitoring | The ON/OFF status of the communications power supply can be detected at the communications power supply connector. | |
| Data stored in Master Unit (built-in EEPROM) | 1) The following device parameters:<br>• Registration Table<br>• Registration Table Check Type<br>• Registered Slave Unit Participation Monitoring Time, Registered Slave Unit Participation Standby Mode, and Event Disable Setting<br>• Software Settings Table<br>• I/O Communications Start Mode<br>• Communications Error Input Data Zero Clear Mode<br>• Network settings<br>2) Part of error history (depends on type of error; mainly serious error related to communications stopping) | |
| Noise immunity | Conforms to IEC 61000-4-4 2kV (applied to PLC power supply) | |
| Vibration resistance | Same as general PLC specifications. | |
| Shock resistance | Same as general PLC specifications. | |
| Dielectric strength | 500 VAC (between isolated circuits) | |
| Insulation resistance | 20 MΩ min. (between isolated circuits) | |
| Ambient operating temperature | 0 to 55°C | |
| Ambient operating humidity | 10% to 90% (with no condensation) | |
| Ambient operating atmosphere | No corrosive gases | |
| Storage humidity | –20 to 75°C | |

## 2-1-2 Component Names and Functions

### CS-series Master Unit

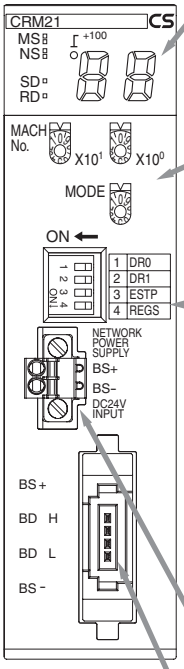


Display Section
Shows the Master Unit status and Slave Unit communications status.
· Indicators
Four LED indicators:
MS (green/red), NS (green/red), SD (yellow), and RD (yellow)
· Seven-segment Display
Displays the communications status, error code, etc.
(two digits plus a dot that indicates "+100")

Rotary Switches
· MACH No.
Special I/O Unit unit number setting
Two decimal rotary switches (0 to 99)
· MODE
Communications mode number of the Master Unit
One decimal rotary switch (0 to 9)

DIP Switch
Used to set the baud rate, communications stop mode, and Registration Table (4-pin switch).

| SW1 | SW2 | Baud rate setting |
|---|---|---|
| DR0 | DR1 | |
| OFF | OFF | 4 Mbits/s (default)<br>Note: A baud rate of 4 Mbits/s is not supported for branch lines and thus cannot be used for Slave Units with Cables (i.e., Bit Slave Units). |
| ON | OFF | 3 Mbits/s |
| OFF | ON | 1.5 Mbits/s |
| ON | ON | 93.75 kbits/s |

| SW | Name | ON | OFF |
|---|---|---|---|
| 3 | ESTP (Communications Error Communications Stop Mode) | Communications stop when a communications error occurs. | Communications do not stop when a communications error occurs. |
| 4 | REGS (Registration Table Enable Setting) | Registration Table enabled. | Registration Table disabled. |

Communications Power Supply Connector
Connect this connector to a 24-VDC power supply when using Round Cable II, Flat Cable I, or Flat Cable II cable.
Doing so will supply communications power to the Slave Units and Repeater Units on the trunk line from the communications connector through the Flat Cable.
Note: Do not connect anything to this connector when using Round Cable I cable.

Communications Connector
Connect the communications cable to this connector.
BS+, BS- (communications power) and BDH, BDL (communications data)
BS+ and BS- are used only when using Round Cable II, Flat Cable I, or Flat Cable II cable to output the communications power supply connected to the communications power supply connector.
Note: Open Type Connector (to connect Units to the Cable) can be used to connect to a terminal block.

## CJ-series Master Unit

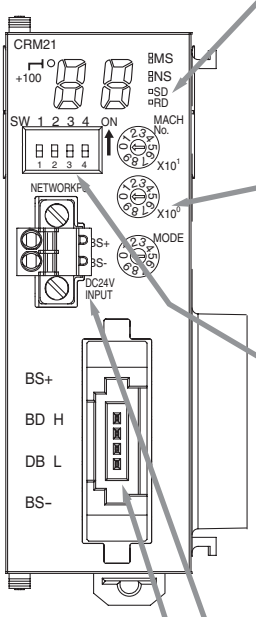


Display Section
Shows the Master Unit status and Slave Unit communications status.
· Indicators
Four LED indicators:
MS (green/red), NS (green/red), SD (yellow), and RD (yellow)
· Seven-segment Display
Displays the communications status, error code, etc.
(two digits plus a dot that indicates "+100")

Rotary Switches
· MACH No.
Special I/O Unit unit number setting
Two decimal rotary switches (0 to 99)
· MODE
Communications mode number of the Master Unit
One decimal rotary switch (0 to 9)

DIP Switch
Used to set the baud rate, communications stop mode, and Registration Table (4-pin switch).

| SW1 DR0 | SW2 DR1 | Baud rate setting |
|---|---|---|
| OFF | OFF | 4 Mbits/s (default)<br>Note: A baud rate of 4 Mbits/s is not supported for branch lines and thus cannot be used for Slave Units with Cables (i.e., Bit Slave Units). |
| ON | OFF | 3 Mbits/s |
| OFF | ON | 1.5 Mbits/s |
| ON | ON | 93.75 kbits/s |

| SW | Name | ON | OFF |
|---|---|---|---|
| 3 | ESTP (Communications Error Communications Stop Mode) | Communications stop when a communications error occurs. | Communications do not stop when a communications error occurs. |
| 4 | REGS (Registration Table Enable Setting) | Registration Table enabled. | Registration Table disabled. |

Communications Power Supply Connector
Connect this connector to a 24-VDC power supply when using Round Cable II, Flat Cable I, or Flat Cable II cable.
Doing so will supply communications power to the Slave Units and Repeater Units on the trunk line from the communications connector through the Flat Cable.
Note: Do not connect anything to this connector when using Round Cable I cable.

Communications Connector
Connect the communications cable to this connector.
BS+, BS- (communications power) and BDH, BDL (communications data)
BS+ and BS- are used only when using Round Cable II, Flat Cable I, or Flat Cable II cable to output the communications power supply connected to the communications power supply connector.
Note: Open Type Connector (to connect Units to the Cable) can be used to connect to a terminal block.

## 2-1-3 Display Section

### Communications Indicators

The following LED indicators are provided for communications.

MS (Module Status): Shows the status of the node itself. (Two colors: green and red)

NS (Network Status): Shows the status of communications. (Two colors: green and red)

SD (Send Data): Shows Master Unit transmission status. (One color: yellow)

RD (Receive Data): Shows Master Unit reception status. (One color: yellow)

| Indicator | Status | Status definition | Meaning |
|---|---|---|---|
| MS | Lit green | Normal | The Unit is operating normally. |
| | Lit red | Fatal error | Unit hardware error, such as a watchdog timer error (WDT) |
| | Flashing red | Non-fatal error | Communications mode number or unit number setting error |
| | Not lit | Power OFF/Preparing | Power OFF, resetting, or initializing |
| NS | Lit green | Online, with remote I/O communications in progress | Power is being supplied, remote I/O communications have started, there are no communications errors at any Slave Unit or Repeater Unit, there are no Registration Table errors, and there are no node address duplication errors for Slave Units or Repeater Units. |
| | Flashing green | Online, with no remote I/O communications in progress | Remote I/O communications have not started or have stopped (for a reason other than a communications error). |
| | Lit red | Fatal communications error | An error has occurred in the communications circuit. |
| | Flashing red | Non-fatal communications error | A communications error has occurred at one or more Slave Units or Repeater Units.<br>A verification error (non-existent or unregistered Slave Unit) has occurred at one or more Slave Units.<br>Communications have stopped due to a communications error.<br>An illegal configuration error (number of Repeater Units) has occurred.<br>An address duplication error has occurred at one or more Slave Units or Repeater Units. |
| | Not lit | Power OFF/Preparing | Power OFF, resetting, or initializing |
| SD | Lit yellow | Normal transmission | Frames are being sent normally from the Master Unit. |
| | Not lit | No transmission | The Master Unit is not sending data. |
| RD | Lit yellow | Normal reception | Frames are being sent normally from a Slave Unit. |
| | Not lit | No reception | The Master Unit is not receiving data. |

The indicator flashing intervals are approximately 0.5 s lit and 0.5 s not lit.

### Seven-segment Display

- The seven-segment display shows the baud rate during normal transmission.
  It lights while remote I/O communications are in progress and flashes while they are stopped.
- When a communications error occurs, the following information is displayed in order: Error code (2 digits hexadecimal) - Type of Slave Unit at error node - Node address (2 digits decimal).
- When an error other than a communications error occurs, the error code (2 digits hexadecimal) is displayed.

| Status | | Display contents | Display | Actual display | | Contents |
|---|---|---|---|---|---|---|
| Normal | Remote I/O communications in progress | Baud rate display lit. | _0 | | Lit | 4 Mbps |
| | | | _1 | | Lit | 3 Mbps |
| | | | _2 | | Lit | 1.5 Mbps |
| | | | _3 | | Lit | 93.75 kbps |
| | Remote I/O communications stopped | Baud rate display flashing. | _0 | | Flashing | 4 Mbps |
| | | | _1 | | Flashing | 3 Mbps |
| | | | _2 | | Flashing | 1.5 Mbps |
| | | | _3 | | Flashing | 93.75 kbps |
| Error | Initialization error | Error code | The error code is displayed in hexadecimal (lit). | | | |
| | Communications error | The error code, Slave Unit type, and applicable node address are alternately displayed. | The error code (2 digits hexadecimal), Slave Unit type, and applicable node address (1-bit dot notation for the 100 position for 3-digit decimal) are alternately displayed (i.e., the cause of the error).<br>**Note** The error codes are different for inputs and outputs. | | | |
| | | | Example | Error code | | Slave Unit type |
| | | | | Display | Actual display | Display / Actual display / Meaning |
| | | | A communications error occurred. | d9 | | i / IN |
| | | | | | | o / OUT |
| | | | | | | bi / Bit input |
| | | | | | | bo / Bit output |
| | | | | | | r / Repeater Unit |
| | | | A node address duplication error occurred. | d0 | | Same as above. |
| | | | A non-existent Slave Unit verification error occurred. | d5 | | Same as above. |
| | | | An unregistered Slave Unit verification error occurred. | d6 | | Same as above. |
| | Error during operation<br>**Note** An error during operation is an error other than a communications error that occurs during Unit operation. | Error code | The error code is displayed in 2-digit hexadecimal (lit). | | | |
| | | | Example | Error code | | --- |
| | | | | Display | Actual display | |
| | | | Communications have stopped due to a communications error. | A0 | | --- |
| | | | Software set data is illegal. | E4 | | --- |
| | | | Registered Table data is illegal. | E8 | | --- |

## 2-1-4 Switch Settings

**Unit Number Switches (MACH No.)**

Special I/O Unit unit number setting: Two decimal rotary switches (0 to 99)

This setting is read when the power supply is turned ON to the PLC.

**MODE Switch**

Master Unit communications mode number setting: One decimal rotary switch (0 to 9)

This setting is read when the power supply is turned ON to the PLC.

| Communications mode No. | Name | Connectable node addresses | Control points | Memory areas | Number of unit numbers used per Master Unit | Settable range |
|---|---|---|---|---|---|---|
| 0 | Communications mode No. 0 | Word Slave Units: IN0 to IN7 and OUT0 to OUT7 | Word Slave Units: 128 inputs and 128 outputs | Special I/O Unit Area (First word depends on unit number of Master Unit.) | 2 | 00 to 94 |
| 1 | Communications mode No. 1 | Word Slave Units: IN0 to IN15 and OUT0 to OUT15 | Word Slave Units: 256 inputs and 256 outputs | | 4 | 00 to 92 |
| 2 | Communications mode No. 2 | Word Slave Units: IN0 to IN31 and OUT0 to OUT31 | Word Slave Units: 512 inputs and 512 outputs | | 8 | 00 to 88 |
| 3 | Communications mode No. 3 | Word Slave Units: IN0 to IN15 and OUT0 to OUT15<br>Bit Slave Units: IN0 to IN63 and OUT0 to OUT63 | Word Slave Units: 256 inputs and 256 outputs<br>Bit Slave Units: 128 inputs and 128 outputs | | 8 | 00 to 88 |
| 4 | Reserved | --- | --- | --- | --- | --- |
| 5 | Reserved | --- | --- | --- | --- | --- |
| 6 | Reserved | --- | --- | --- | --- | --- |
| 7 | Reserved | --- | --- | --- | --- | --- |
| 8 | Software Setting Mode | Can be set within the following ranges:<br>Word Slave Units: IN0 to IN63 and OUT0 to OUT63<br>Bit Slave Units: IN0 to IN127 and OUT0 to OUT127 | Can be set within the following ranges:<br>Word Slave Units: 1,024 inputs and 1,024 outputs<br>Bit Slave Units: 256 inputs and 256 outputs | Can be allocated anywhere in the CIO, DM, WR, or HR Areas.<br>**Note** Status and parameters are allocated in the Special I/O Unit Area. | 1 | 00 to 95 |
| 9 | Reserved | --- | --- | --- | --- | --- |

**Note** (1) In a CompoNet Network, Word Slave Units have 16 bits per node address.

(2) Do not set the reserved communications mode numbers (4 to 7 and 9). A communications mode setting error (H4 at the 7-segment LED indicator) will occur if any of these modes is set.

## DIP Switch

This setting is read when the power supply is turned ON to the PLC.

### Baud Rate Setting

| SW1 | SW2 | Baud rate setting |
|---|---|---|
| DR0 | DR1 | |
| OFF | OFF | 4 Mbps (default) |
| ON | OFF | 3 Mbps |
| OFF | ON | 1.5 Mbps |
| ON | ON | 93.75 kbps |

Slave Units automatically detect the baud rate set on SW1 (DR0) and SW2 (DR2). It is not necessary to set the baud rate separately for any of the Slave Units.

### Communications Error Communications Stop Mode Setting

| SW | Name | ON | OFF |
|---|---|---|---|
| 3 | ESTP (Communications Error Communications Stop Mode) | Communications stop when a communications error occurs. | Communications do not stop when a communications error occurs. |

When SW3 (ESTP) is turned ON, all remote I/O communications are stopped when a communications error occurs at any Slave Unit. (The Communications Error Communications Stop Flag at status bit 02 also turns ON.) When SW3 is turned OFF, remote I/O communications continue even if a communications error occurs at a Slave Unit.

### Registration Table Enable Setting

| SW | Name | ON | OFF |
|---|---|---|---|
| 4 | REGS (Registration Table Enable Setting) | Registration Table enabled. | Registration Table disabled. |

If the power is turned ON while SW 4 (REGS) is ON, the registration tables that have been edited or downloaded by the CX-Integrator will be enabled. Only registered Slave Units can participate. The registered Slave Units are also compared to actual Slave Units. If they do not agree, the Registered Table Verification Error Flag in status bit 01 will turn ON.

## 2-1-5 Terminal Arrangement

### Communications Power Supply Connector

This connector supplies communications power to Slave Units and Repeater Units connected to the trunk line.

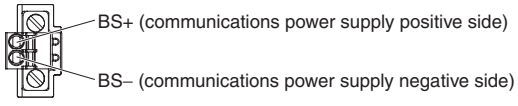


**Note** This connector does not supply power to the Master Unit.

### Communications Connector

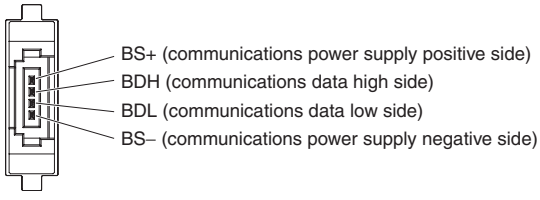

**Note** BS+ and BS- output the communications power supply connected to the communications power supply connector. (This is the communications power for Slave Units and Repeater Units connected to the trunk line.)
This connector does not supply power to the Master Unit.

## 2-1-6 Dimensions

### CS1W-CRM21

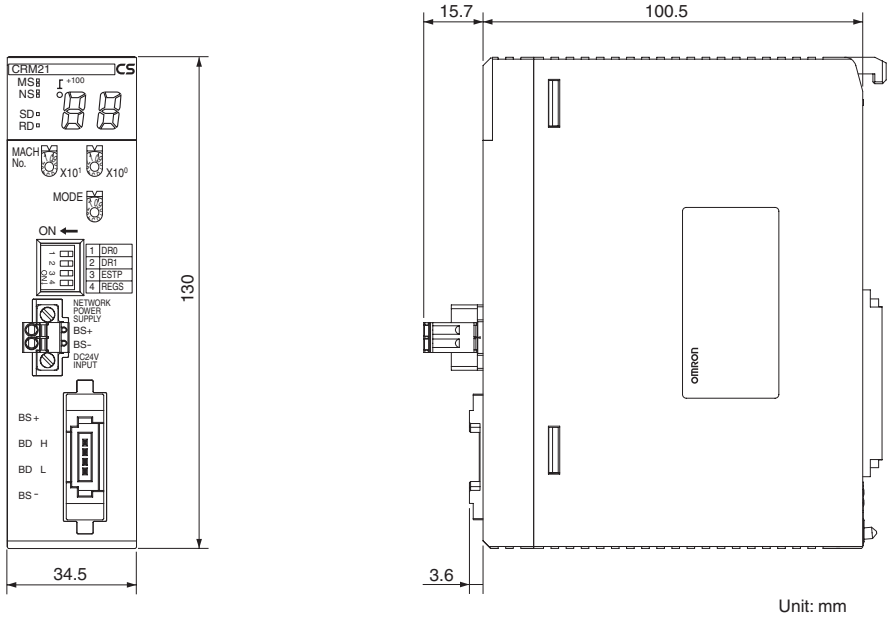


Unit: mm

### CJ1W-CRM21

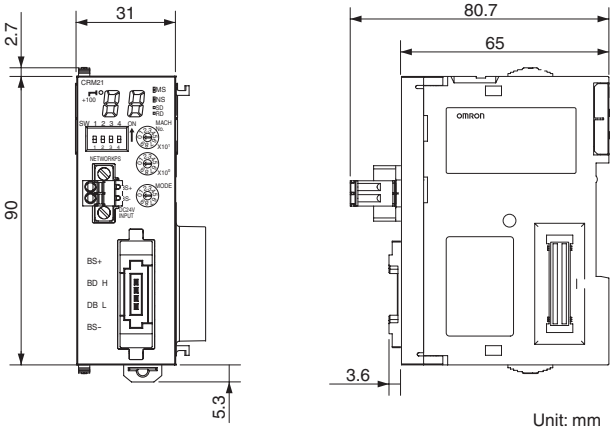


Unit: mm

# SECTION 3
# Wiring Configurations

This section describes the configurations of CompoNet Networks.


3-1 Wiring Formations . . . . . 44
3-2 CompoNet Network Wiring . . . . . 45
3-2-1 Round Cable I . . . . . 45
3-2-2 Round Cable II . . . . . 46
3-2-3 Flat Cable I or Flat Cable II . . . . . 47
3-2-4 Cable Types . . . . . 49
3-2-5 Connection Methods . . . . . 52
3-2-6 Node Connection Methods . . . . . 52
3-2-7 Branching a Communications Cable . . . . . 53
3-2-8 Extending the Cable Length . . . . . 55
3-2-9 Connection Locations for Terminating Resistors . . . . . 56
3-2-10 Connection Locations for Communications Power Supply . . . . . 58

# 3-1 Wiring Formations

A CompoNet network can take two wiring formations: Trunk line–Branch line and Unrestricted Wiring.

## Trunk Line-Branch Line Formation

With this wiring formation, the trunk line is differentiated from branch lines.

There are restrictions on the number of branches and the number of Units that can be connected.

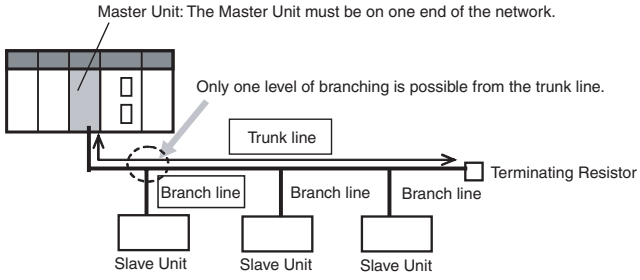


## Unrestricted Wiring Formation

With this wiring formation, there is no differentiation between the trunk line and branch lines.

There are no wiring restrictions as long as the total cable length does not exceed 200 m. There is also no limit on the number of branches.

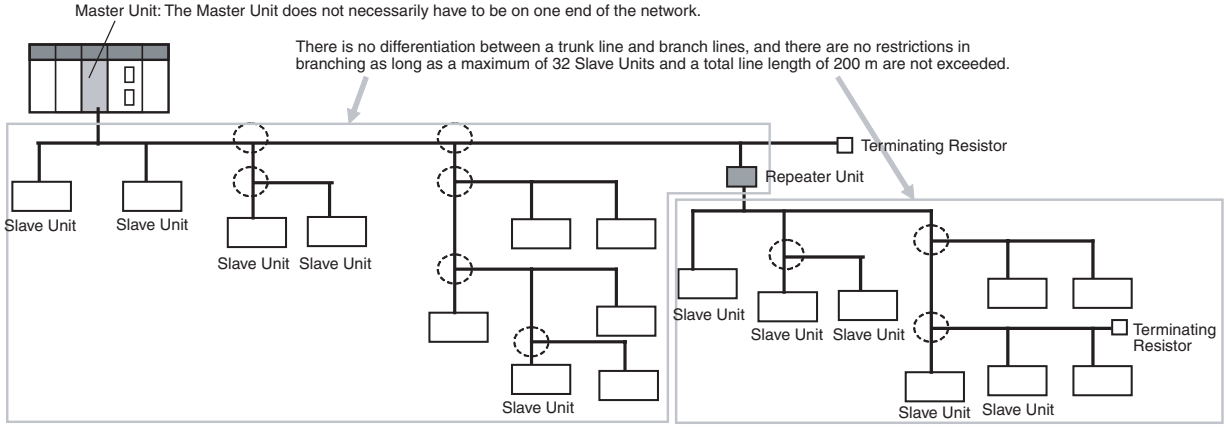


The formation is determined automatically by the type of cable used and the required baud rate.

| Cable type | Baud rate | | | |
|---|---|---|---|---|
| | 4 Mbps | 3 Mbps | 1.5 Mbps | 93.75 kbps |
| Round Cable I | Trunk-Branch (See note.) | Trunk-Branch | Trunk-Branch | Trunk-Branch |
| Round Cable II, Flat Cable I, or Flat Cable II | Trunk-Branch (See note.) | Trunk-Branch | Trunk-Branch | Unrestricted |

**Note** Lines cannot be branched from the trunk line if the baud rate is 4 Mbps. Only multidrop connections can be used for branching from the trunk line.

The following table shows the conditions and restrictions for each formation.

| Item | Wiring formation | |
|---|---|---|
| | Trunk–Branch formation | Unrestricted wiring formation |
| Master Unit location | At an end of a network | Anywhere in a network (not necessarily at an end) |
| Maximum number of Slave Units connectable to any one branch line | 1 or 3 depending on the cable type and the baud rate | No restrictions |
| Terminating Resistor location | On the opposite ends of the trunk line and all sub-trunk lines from the Master Unit and each Repeater Unit | On the farthest ends from the Master Unit and each Repeater Unit |

# 3-2 CompoNet Network Wiring

A CompoNet Network requires wiring of following lines.

- Two communications signal lines: BDH (communications data high) and BDL (communications data low),
- Two communications power supply lines: one for communications, and the other for internal circuits of Slave Units. Terminals are BS+ (+ terminal of communications power supply) and BS– (–terminal of communications power supply).

The wiring method depends on the cable type.

## 3-2-1 Round Cable I

- The two communications signal lines are connected in parallel between the Master Unit or a Repeater Unit and multiple Slave Units.
- A DCN4-TB4 Open Type Connector is used to connect the communications cable between the Master Unit or a Repeater Unit and a Slave Unit.
- The two communications power supply lines are connected to each Slave Unit. The supply lines must be different lines from the communications lines. The communications power supply lines supply 24-VDC communications power.
- The Master Unit and the connected Repeater Units are not supplied with power.
- A DRS1-T Terminating Resistor must be connected at the end of the network.

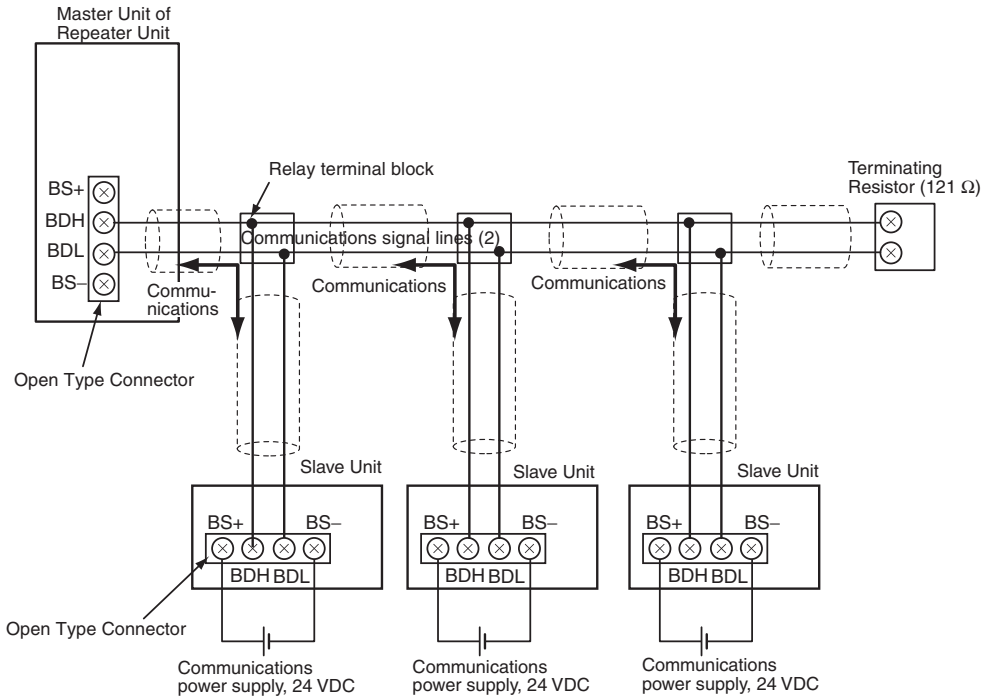


Multidrop connections can also be used to connect the Slave Units in parallel.

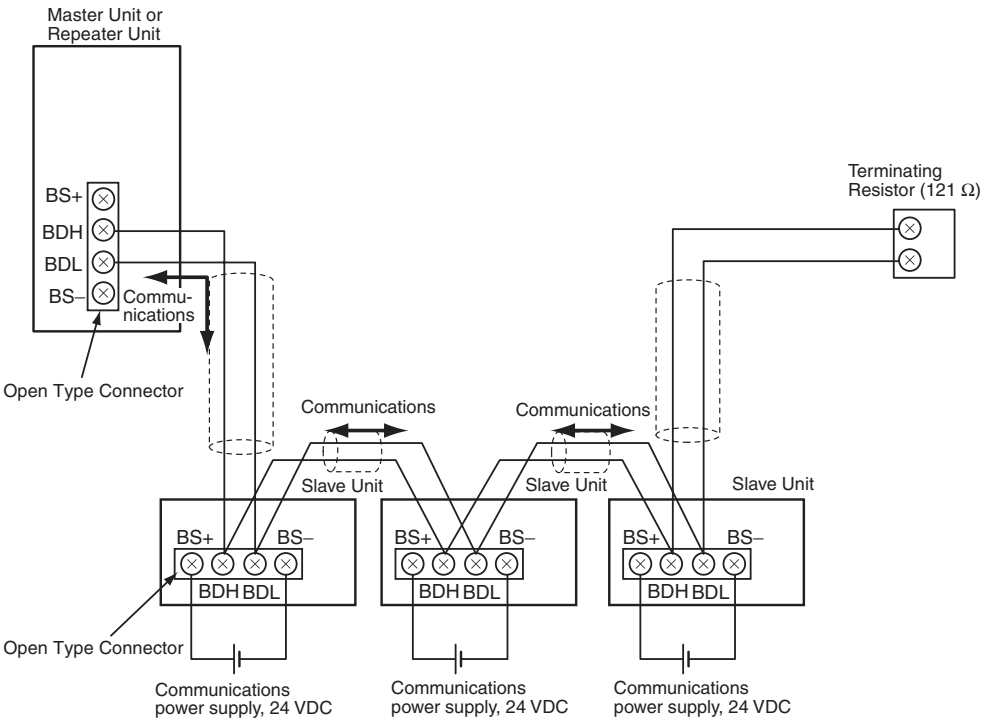


## 3-2-2 Round Cable II

- Connect the two communications signal lines and two communications power lines in parallel between the Master Unit or Repeater Unit and multiple Slave Units.
- Use Open Type Connectors (DCN4-TB4, for connecting Units) to connect Communications Cables to Master Units, Repeater Units, and Slave Units.

- Connect the communications power supply (24 VDC) to the communications power supply connector for the Master Unit or Repeater Unit.
- Connect DCN4-TM4 Terminating Resistors and DCN4-TR4 Flat Connector Sockets at the ends of the network.

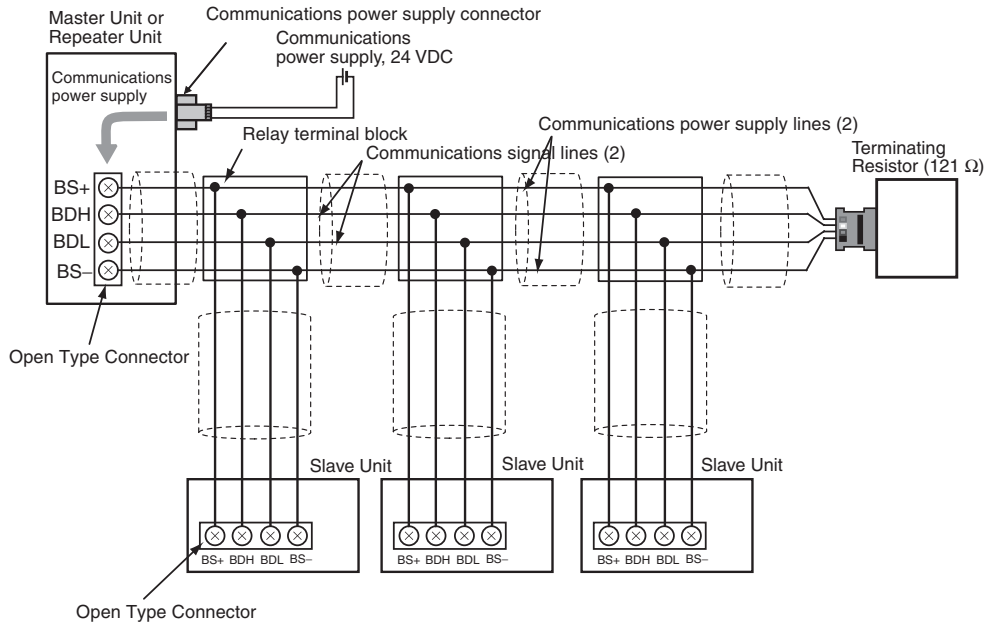


Multidrop connections can also be used to connect the Slave Units in parallel.

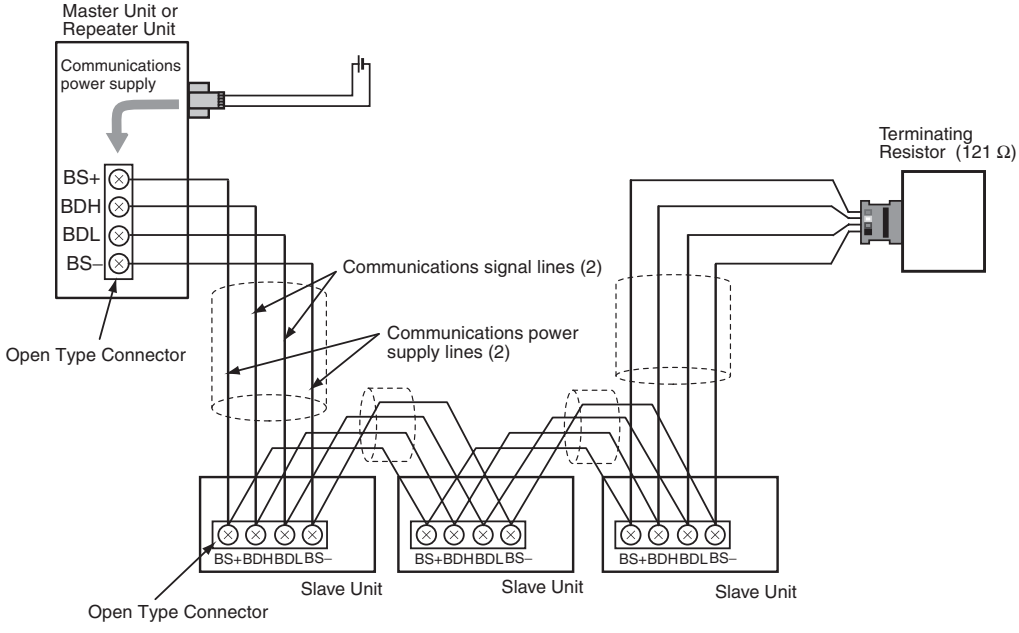


## 3-2-3 Flat Cable I or Flat Cable II

- The two communications signal lines and the two communications power supply lines are connected to the Master Unit, Repeater Units, and Slave Units using Flat Cable.
- Connect the communications power supply (24 VDC) to the communications power supply connector for the Master Unit or Repeater Unit.

- A Terminating Resistor (DCN4-TM4 or DCN5-TM4) must be connected at the end of the network.

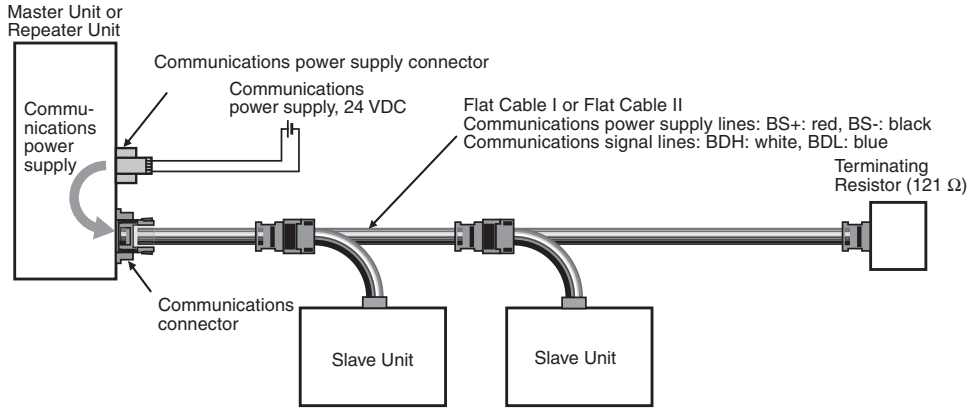


Slave Units can also be connected in parallel by using multidrop connections. A DCN4-MD4 Multidrop Connector is required for this

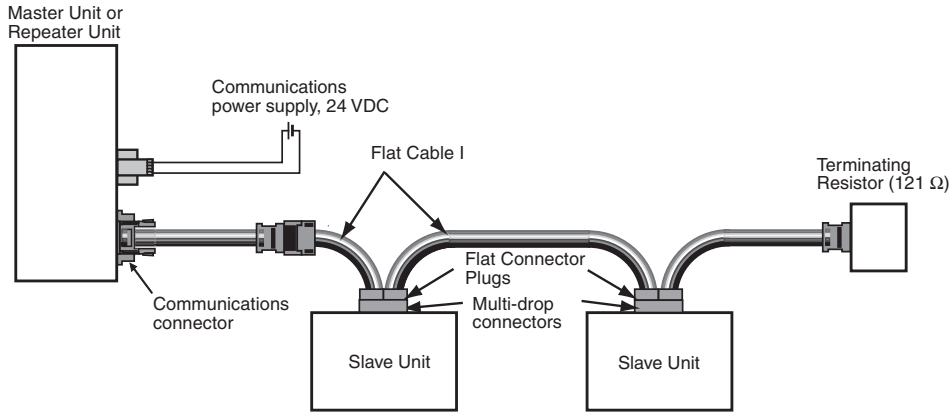

## 3-2-4 Cable Types

### Cable Types

The four types of cable listed in the following table can be used as the communications cable for a CompoNet Network.

Do not use any other cables.

| Cable type | Main application | | Communications power | Conductors | | | |
|---|---|---|---|---|---|---|---|
| | | | | BDH (signal high) | BDL (signal low) | BS+ (communications power supply positive side) | BS− (communications power supply negative side) |
| Round Cable I (VCTF 2-conductor cable) | • Wiring for the Master Unit and Repeater Units<br>• Wiring for Slave Units downstream from each Repeater Unit | • When using commercially available cable is desirable.<br>• To provide communications power separately.<br>• When Bit Slave Units are not being used. | Provided separately. | Black | White | None | None |
| Round Cable II (VCTF 4-conductor cable) | | • When using a commercially available cable is desirable.<br>• To supply communications power collectively to all Slave Units with the communications cable. | Included | White | Green or Blue | Red | Black |
| Flat Cable I (Standard) | | • To supply communications power to all Slave Units with the communications cable.<br>• To use Bit Slave Units. | Included | White | Blue | Red | Black |
| Flat Cable II (Sheathed) | | • To supply communications power to all Slave Units with the communications cable.<br>• To use Bit Slave Units.<br>• Applications in environments that required IP54 compliance (drip-proof, splash-proof). | Included | White | Blue | Red | Black |

**Round Cable I**

Use a commercially available VCTF cable with two 0.75-mm$^2$ conductors (JIS C3306) that meets CompoNet specifications. Ask the cable manufacturer for products applicable to CompoNet.

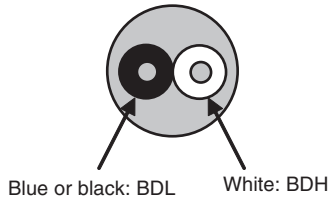

**Round Cable II**

Use a commercially available VCTF cable with four 0.75-mm$^2$ conductors (JIS C3306) that meets CompoNet specifications. Ask the cable manufacturer for products applicable to CompoNet.

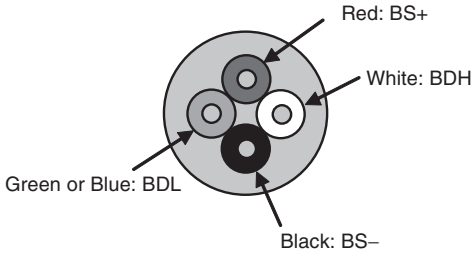


**DCA4-4F10 Flat Cable I**

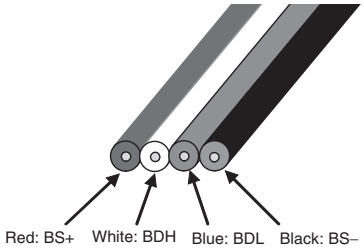


| Conductor No. | Insulation color | Application | Nominal cross-section | Allowable current (A) |
|---|---|---|---|---|
| 1 | Red | BS+ (communications power supply positive side) | 0.75 mm$^2$ | 5 max. |
| 2 | White | BDH (signal high) | 0.5 mm$^2$ | --- |
| 3 | Blue | BDL (signal low) | 0.5 mm$^2$ | --- |
| 4 | Black | BS– (communications power supply negative side) | 0.75 mm$^2$ | 5 max. |

Models other than the DCA4-4F10 can also be used as long as they conform to CompoNet specifications. Ask the cable manufacturer for applicable products.

**DCA5-4F10 Flat Cable II**

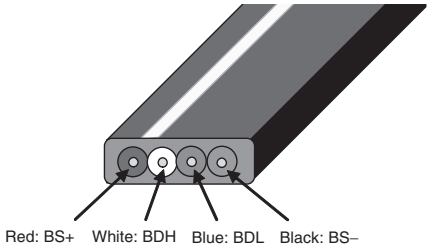


| Conductor No. | Insulation color | Application | Nominal cross-section | Allowable current (A) |
|---|---|---|---|---|
| 1 | Red | BS+ (communications power supply positive side) | 0.75 mm$^2$ | 5 max. |
| 2 | White | BDH (signal high) | 0.5 mm$^2$ | --- |
| 3 | Blue | BDL (signal low) | 0.5 mm$^2$ | --- |
| 4 | Black | BS– (communications power supply negative side) | 0.75 mm$^2$ | 5 max. |

Models other than the DCA5-4F10 can also be used as long as they conform to CompoNet specifications. Ask the cable manufacturer for applicable products.

**Note**

(1) For additional information on applicable cables to CompoNet and their manufacturers, refer to the ODVA home page.

(2) The characteristics of each conductor in a Flat Cable I or Flat Cable II cable have been adjusted to the specific application of the conductor as listed in the table. Check the insulator colors, and use them only for the specified application.

## Selecting Cable Types

Refer to *Types of Cables* on page 24, and select applicable cables.

## Using Different Cable Types

All cables downstream from the Master Unit must be the same type. That means the same type of cable must be used for the trunk line and their branch lines; for sub-trunk lines and their branch lines; and branch lines and their sub-branch lines.

If a Repeater Unit is used, however, cables can be different upstream and downstream from the Repeater Unit, i.e., for the trunk line and sub-trunk lines, and for a sub-trunk line and another sub-trunk line. Refer to the following illustration.

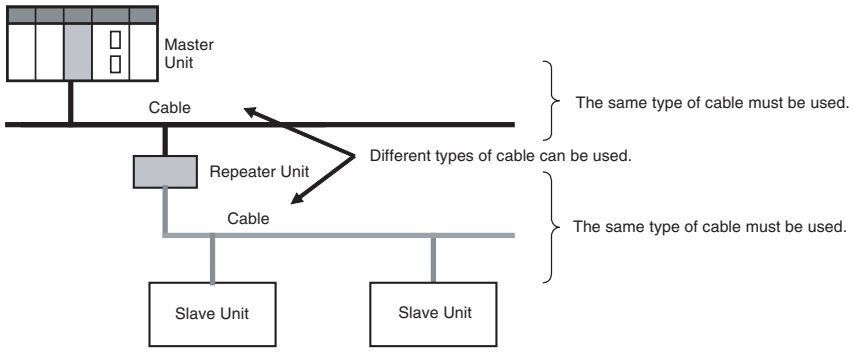


**Note** Round Cable I, Round Cable II, Flat Cable I and Flat Cable II cables are all treated as different types of cables.

## Cable Separation between Multiple CompoNet Network

When more than one CompoNet network uses Flat Cable I or II cables, electrical interference may disturb stable system operation. To prevent interference, do not bundle Flat Cables from different CompoNet networks. Instead, separate the Cables for one network by at least 5 mm from cables for other networks.

## 3-2-5 Connection Methods

### Round Cable I or Round Cable II

| Master Unit connections | Slave Unit/Repeater Unit connections | Cable branches | |
|---|---|---|---|
| | | T-branch connections | Multidrop connections |
| Open Type Connector<br> 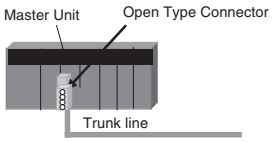 <br> | Open Type Connector<br> 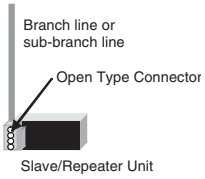 <br><br>**Note** The Open Type Connectors cannot be used for Bit Slave Units. | Relay terminal block (commercially available product)<br> 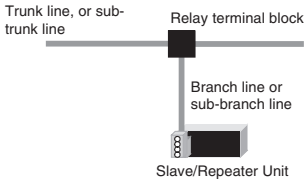 <br> | Open Type Connector<br> 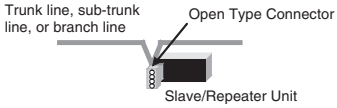 <br> |

### Flat Cable I or Flat Cable II

| Master Unit connections | Slave Unit/Repeater Unit connections | Cable branches | |
|---|---|---|---|
| | | T-branch connections | Multidrop connections |
| Flat Connector Plug<br> 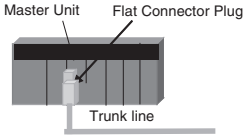 <br> | Flat Connector Plug<br>• Word Slave Unit or Repeater Unit:<br> 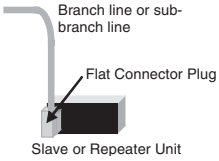 <br><br>• Bit Slave Unit:<br> 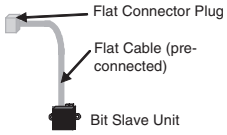 <br><br>**Note** A Bit Slave Unit is pre-connected to a Flat Cable. | Flat Connector Socket + Flat Connector Plug<br> 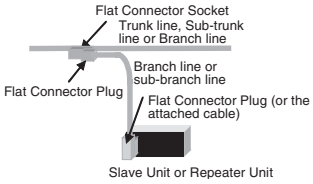 <br> | Multidrop Connector<br> 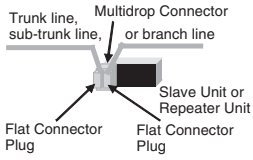 <br><br>**Note** Flat Cable II (sheathed cables) cables do not support multidrop connection by Multidrop Connectors. |

| Extending the cable |
|---|
| Flat Connector Socket + Flat Connector Plug<br> 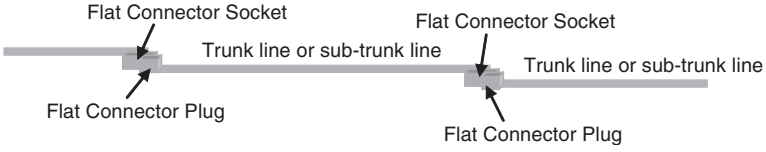 <br> |

## 3-2-6 Node Connection Methods

Nodes are connected to the CompoNet Network using the methods described in this section.

### Master Unit Connections

Except in unrestricted wiring formations, the Master Unit must always be connected on one end of the trunk line.

The Master Unit has a communications connector to which a communications cable is connected.

**Round Cable I or Round Cable II (Using Open Type Connector)**

The following Open Type Connector is used to connect a Round Cable I or Round Cable II cable to the Master Unit. The Open Type Connector is used to convert the communications connector on the Master Unit to a terminal block. The Open Type Connector takes M3 crimp terminals.

**Round Cable I or Round Cable II**

A DCN4-TB4 Open Type Connector is used.

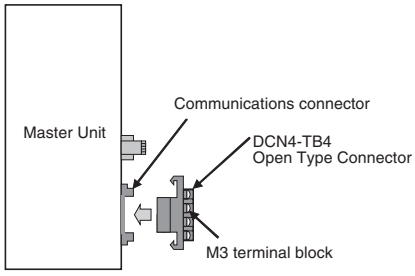


**Flat Cable I or Flat Cable II (Using Flat Connector Plug)**

The following Flat Connector Plugs are used to connect Flat Cable I or Flat Cable II cable to the Master Unit.

**Flat Cable I**

A DCN4-BR4 Flat Connector Plug is used.

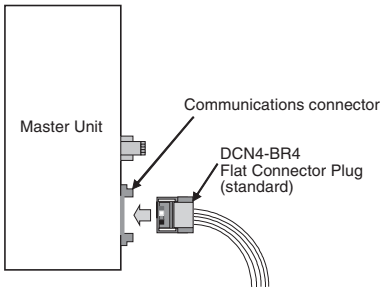


**Flat Cable II**

A DCN5-BR4 Flat Connector Plug is used.

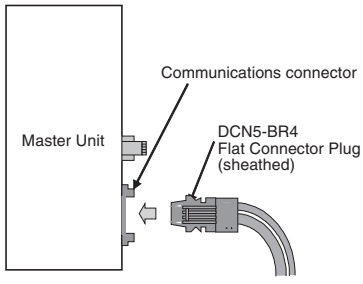


## 3-2-7 Branching a Communications Cable

There are two ways to branch the trunk line, sub-trunk lines, and branch lines: T-branching and multidrop connections.

### T-branching

**Round Cable I or Round Cable II (with a Commercially Available Relay Terminal Block)**

Use a commercially available relay terminal block, and connect the cable wires to the block.

■ **Example for Round Cable I**

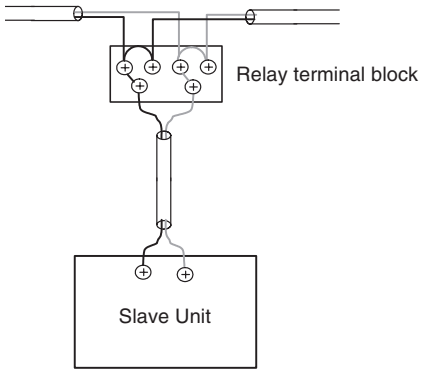


**Note** Attach a M3 crimp terminal to the cable wire before you connect the wire to a terminal block.

**Flat Cable I or Flat Cable II (with a Flat Connector Socket and a Flat Connector Plug)**

Use a Flat Connector Socket and a Flat Connector Plug.

■ **Example for Flat Cable I**

Attach a DCN4-BR4 Flat Connector Plug to a DCN4-TR4 Flat Connector Socket.

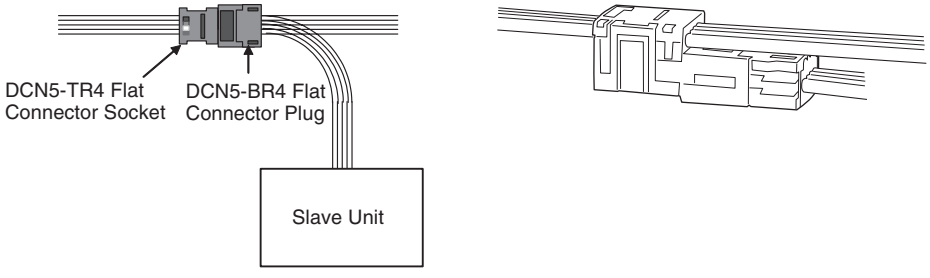


■ **Example for Flat Cable II**

Attach a DCN5-BR4 Flat Connector Plug to a DCN5-TR4 Flat Connector Socket.

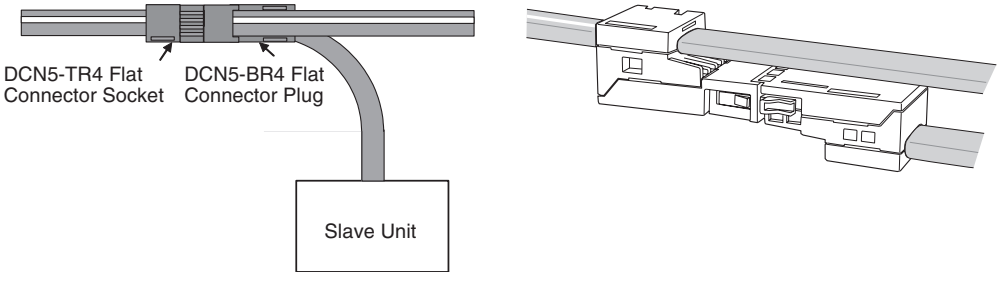


**Note** The same type of cable must be used for both the trunk line and the sub-trunk line.

## Multidrop Connections

**Round Cable I or Round Cable II (with an Open Type Connector)**

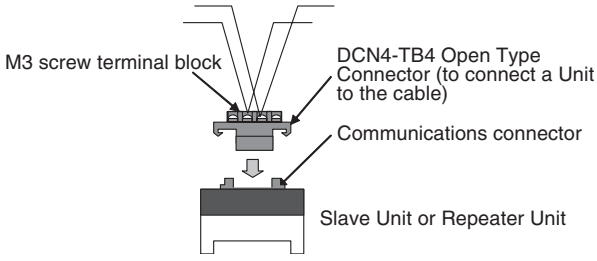


**Flat Cable I (with a Multidrop Connector)**

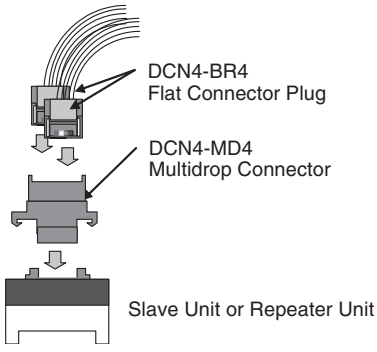


**Flat Cable II** Multidrop connections are not supported.

## 3-2-8 Extending the Cable Length

The cable length for the trunk line, sub-trunk lines, branch lines, and sub-branch lines can be extended by combining the Flat Connector Socket with a Flat Connector Plug.

When this method is used, up to 10 sets of Flat Connector Plugs and Sockets can be used. The maximum extendable length, however, is the standard maximum trunk line length.

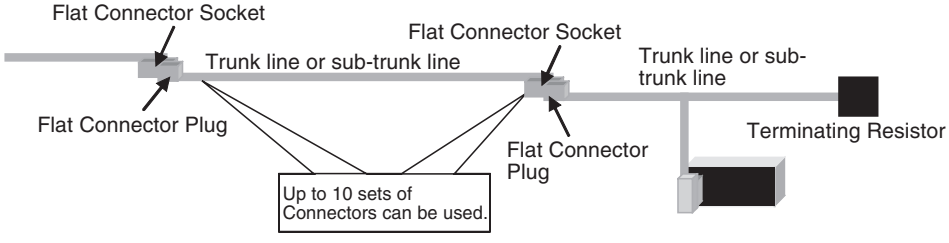


■ **Flat Cable I**

A DCN4-TR4 Flat Connector Socket with a cable stopper and a DCN4-BR4 Flat Connector Plug are used.

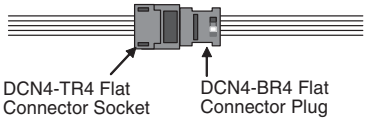


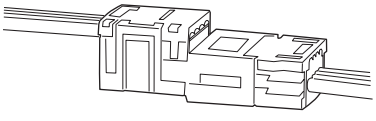

■ **Flat Cable II**

Attach a DCN5-BR4 Flat Connector Plug to a DCN5-TR4 Flat Connector Socket in which a stopper is provided.

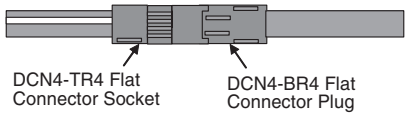


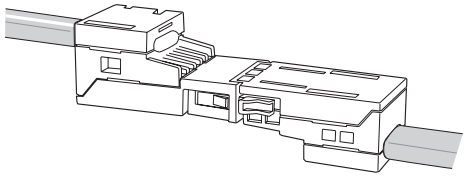

## 3-2-9 Connection Locations for Terminating Resistors

Terminating Resistors must always be connected to the trunk line and each sub-trunk line on the opposite end from the Master Unit or Repeater Unit.

**Note** Do not connect a Terminating Resistor on the end of the Network with the Master Unit.

When the trunk line or sub-trunk line is branched, the Terminating Resistor is connected to the end of the branch line farthest from the Master Unit or Repeater Unit.

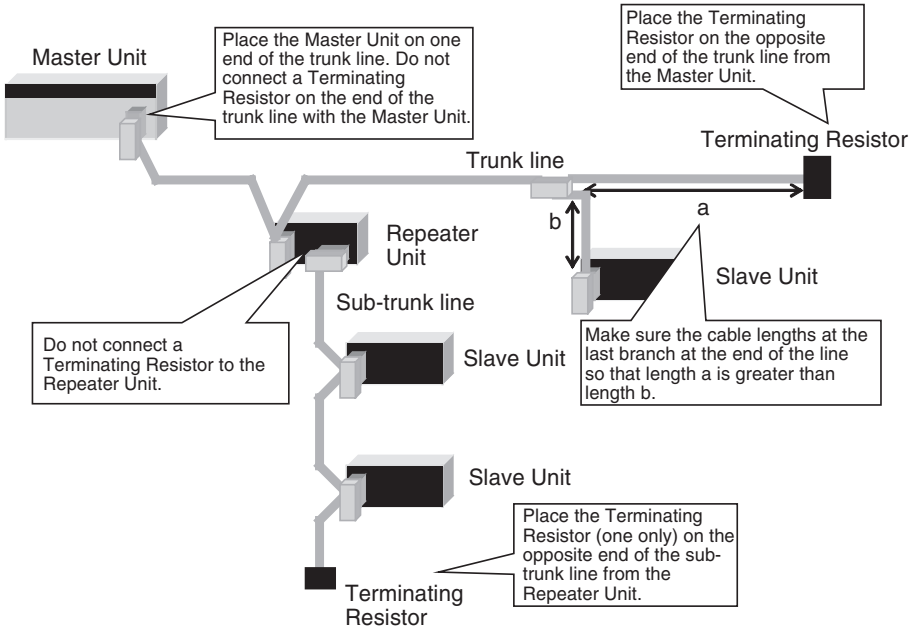

## Connecting Terminating Resistors

There are three methods that can be used to connect Terminating Resistor.

**Method 1:**

Connect a Flat Connector Socket to the trunk line or sub-trunk line and then connect a Terminating Resistor to the Connector.

| Flat Cable I | Flat Cable II |
|---|---|
| 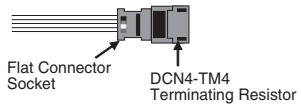  | 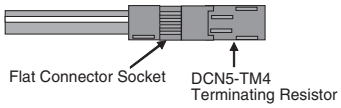  |

**Method 2:**

Connect a Multi-wiring Connector to the communications connector for the upstream port on the Slave Unit or Repeater Unit and then connect the trunk line cable and a Terminating Resistor to the Multi-wiring Connector.

| Flat Cable I |
|---|
| 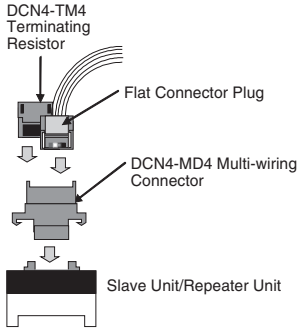  |

**Method 3:**

Connect a Terminating Resistor to the trunk line or sub-trunk line cable.

| Round Cable I | Round Cable II |
|---|---|
| 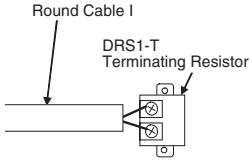  | 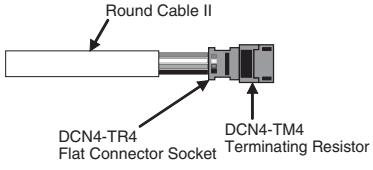  |

## Models and Characteristics of Terminating Resistors

There are two types of Terminating Resistor: the Connector-type and the Terminal Block-type.

| Type of Terminating Resistor | Connector-type | | Terminal Block-type |
|---|---|---|---|
| Name | Terminating Resistor | | |
| Model | DCN4-TM4 | DCN5-TM4 | DRS1-T |
| Resistance | 121 Ω | 121 Ω | 121 Ω |
| Rated power | 1/4 W | 1/4 W | 1/4 W |
| Accuracy | 1% max. | 1% max. | --- |
| Power handling capacity | 0.01 μF | 0.01 μF | --- |
| Applicable cable | Round Cable II or Flat Cable I | Flat Cable II | Round Cable I |

## 3-2-10 Connection Locations for Communications Power Supply

Connect the communications power supply as shown in the following diagrams.

**Round Cable II, Flat Cable I, or Flat Cable II**

**Example for Flat Cable I or II**

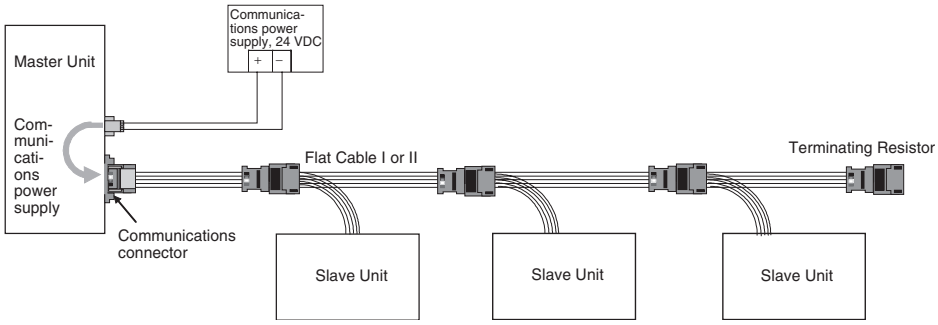


The communications power supply (BS+ and BS-) is connected to the communications power supply connector on the Master Unit. Doing so will supply communications power to the Slave Units on the trunk line from the Round Cable II, Flat Cable I, or Flat Cable II.

**Note**

(1) Connect the communications power supply at only one location for the trunk line and each sub-trunk line.

(2) Connect the communications power supply to the downstream port communications power supply connector on the Repeater Unit to supply power to a sub-trunk line.

**Round Cable I**

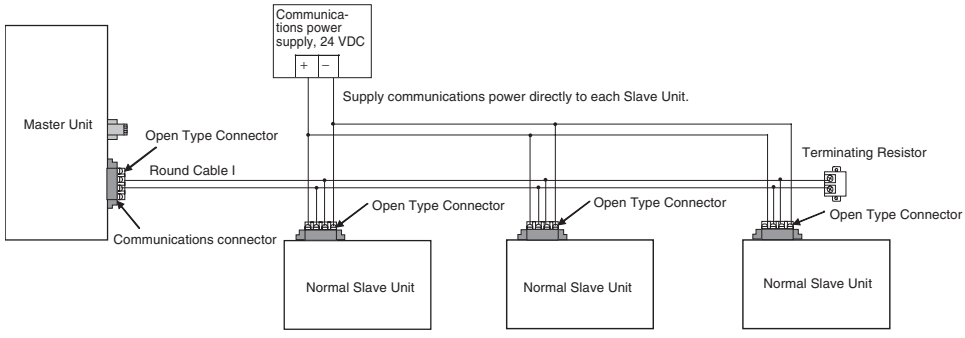


The communications power supply (BS+ and BS-) is connected separately to each Slave Unit and Repeater Unit (see note). Power does not need to be supplied to the Master Unit.

**Note** The communications power to the Repeater Unit must be supplied to the BS+ and BS- terminals on the upstream port (port 1).

Refer to *4-4 Power Supply Wiring* for details on wiring the communications power supply.

# SECTION 4
# Installation and Wiring

This section describes how to install and wire a CompoNet Network.


4-1 Installation . . . . . 60
4-1-1 Tools Required for Installation and Wiring . . . . . 60
4-1-2 Installation Locations According to Degree of Protection . . . . . 60
4-1-3 Installing the Master Unit . . . . . 60
4-2 Connecting Cables . . . . . 64
4-2-1 Overview . . . . . 64
4-2-2 Connecting to Units . . . . . 66
4-2-3 Branching a Communications Cable . . . . . 68
4-2-4 Extending a Communications Cable . . . . . 71
4-2-5 Connecting Terminating Resistors . . . . . 72
4-3 Preparing and Mounting Flat Connectors . . . . . 75
4-3-1 Round Cable II . . . . . 76
4-3-2 Flat Cable I . . . . . 78
4-3-3 Flat Cable II . . . . . 83
4-4 Power Supply Wiring . . . . . 87
4-4-1 Connecting the Communications Power Supply . . . . . 89
4-4-2 Connecting the Communications Power Supply . . . . . 90
4-4-3 Current Consumption of a Slave Unit or a Repeater Unit . . . . . 90
4-4-4 Communications Power Supply Wiring Example . . . . . 91
4-4-5 Precaution in Supplying Power to Slave Units . . . . . 97
4-4-6 Precautions on Locating the I/O Power Supply . . . . . 99
4-4-7 Other Precautions . . . . . 100

# 4-1 Installation

**Note** (1) A sheet is attached to the Master Unit to prevent pieces of wire from entering it. Install and wire the Master Unit with this sheet in place. Stray strands of wire could cause malfunctions.

(2) Be sure to remove the sheet after installation and wiring to facilitate cooling. The Master Unit could overheat and malfunction if the sheet is not removed.

## 4-1-1 Tools Required for Installation and Wiring

The following tools are required to install, wire, and set the Units.

- Phillips screwdrivers: M3 and M4: To install and wire I/O for the Master Unit, Slave Units, and Repeater Units.
- Precision screwdriver: To set rotary switches and DIP switches.

## 4-1-2 Installation Locations According to Degree of Protection

The degree of protection of the CompoNet Network Units depends on the model of the Unit. The degree of protection for each Unit is given in the following table. Select suitable installation locations accordingly.

### Master Units

| Name | Model | Degree of protection | Applicable peripheral devices |
|---|---|---|---|
| Master Units | CS1W-CRM21 | --- | Flat Cable I Peripheral Devices, Flat Cable II Peripheral Devices, and Round Cable I |
| | CJ1W-CRM21 | | |

### Flat Cable I Peripheral Devices

| Name | Model | Degree of protection | Applicable peripheral devices |
|---|---|---|---|
| Flat Cable I | DCA4-4F10 | --- | Flat Cable I (standard, 100 m) |
| Flat Connector Socket | DCN4-TR4 | IP40 | Required when using Flat Cable I |
| Flat Connector Plug | DCN4-BR4 | IP40 | Required when using Flat Cable I |
| Terminating Resistor | DCN4-TM4 | IP40 | Required when using Flat Cable I |

### Flat Cable II Peripheral Devices

| Name | Model | Degree of protection | Applicable peripheral devices |
|---|---|---|---|
| Flat Cable II | DCA5-4F10 | --- | Flat Cable II (sheathed, 100 m) |
| Flat Connector Socket | DCN5-TR4 | IP54 | Required when using Flat Cable II |
| Flat Connector Plug | DCN5-BR4 | IP54 | Required when using Flat Cable II |
| Terminating Resistor | DCN5-TM4 | IP54 | Required when using Flat Cable II |

## 4-1-3 Installing the Master Unit

The Master Unit is installed and used as part of the PLC. The installation method on the PLC is the same as for any normal Unit.

### System Configuration Precautions

- For a CS-series PLC, the Master Unit can be mounted to a CPU Backplane (CS1W-BC□□□) or an Expansion Backplane (CS1W-BI□□□). Up to 80 Units can be mounted for any one PLC.
- For a CJ-series PLC, the Master Unit can be connected in the CPU Rack or an Expansion Rack (10 Units per Rack). Up to 40 Units can be mounted for any one PLC.

## Installing the Master Unit

**CS-series Master Unit**

Use the following procedure to install the CS-series Master Unit.

***1,2,3...***

1. Mount the Unit to the Backplane by attaching it with the top and bottom hooks.

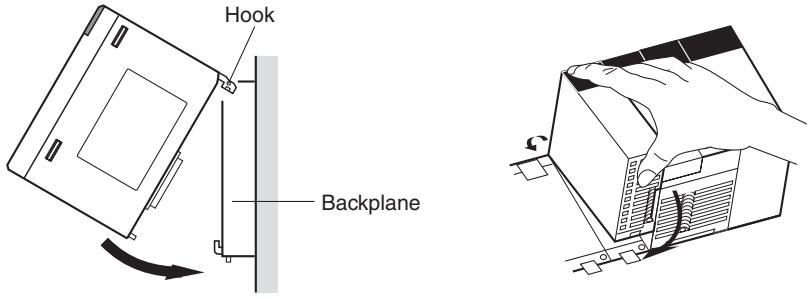


2. Properly insert the Unit into the Backplane connector.
3. Tighten the screen on the bottom of the Unit with a Phillips screwdriver. The screwdriver must be held at a slight angle to tighten the screw; be sure to leave sufficient space below the Backplane.

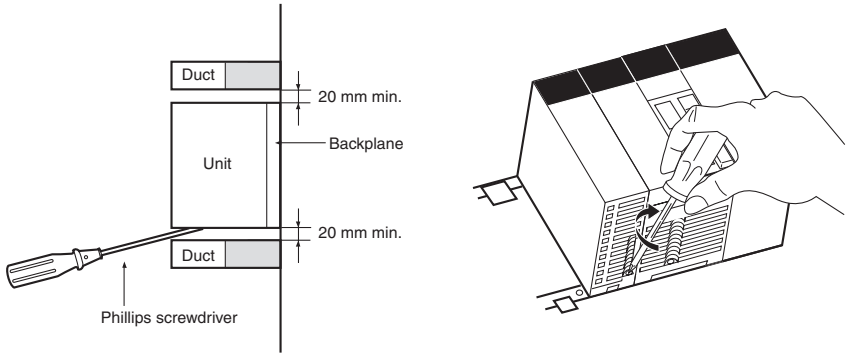


**Note** Tighten the screen on the bottom of the Unit to a torque of 0.4 N·m.

To remove the Unit, loosen the screw at the bottom with a Phillips screwdriver, lift up on the bottom of the Unit, and remove the Unit.

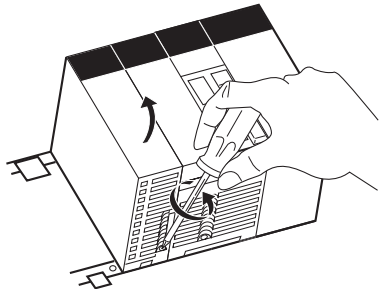

### CJ-series Master Unit

***1,2,3...*** 1. Align the connectors and connect the Master Unit.

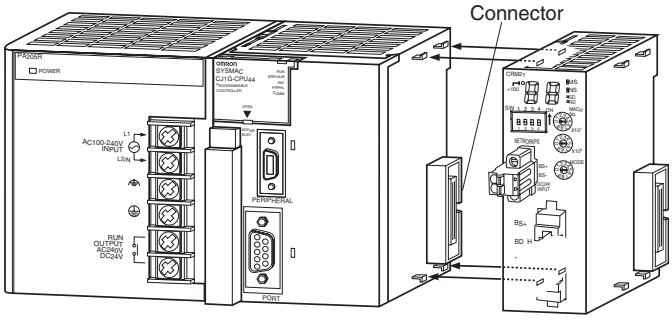


2. Slide the yellow sliders at the top and bottom of the Unit until they click into place and lock the Unit.

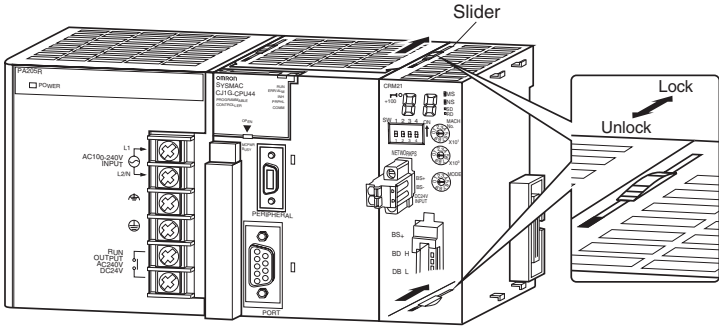


**Note** If the sliders are not locked completely, the Master Unit may not function properly.

To remove the Unit, unlock the sliders and remove the Unit.

## Unit Handling Precautions

- Always turn OFF the power supply to the PLC before performing any wiring operations on the Unit.
- To prevent noise from affecting the system, place all wires connected to the Unit ports in ducts, and use separate ducts from those used for high-voltage and high-power lines.
- Wire with the sheets on top of the Units in place to prevent pieces of wire from entering the Unit. Remove the sheets after completing wiring to facilitate cooling.

### CS-series Master Unit

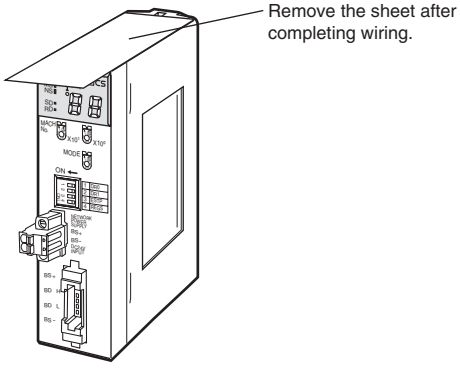

### CJ-series Master Unit

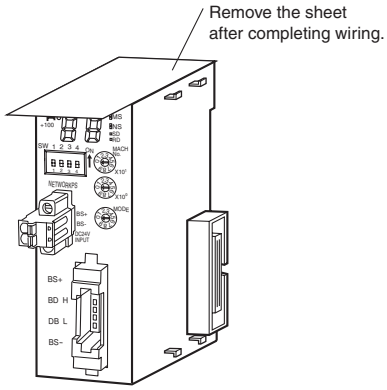

# 4-2 Connecting Cables

## 4-2-1 Overview

This section provides an outline of connecting a CompoNet Network using Round Cable I and Flat Cable I cables.

Refer to *SECTION 3 Wiring Configurations* for information on the configuration. Refer to *4-4 Power Supply Wiring* for information on supplying communications power.

**Round Cable I**

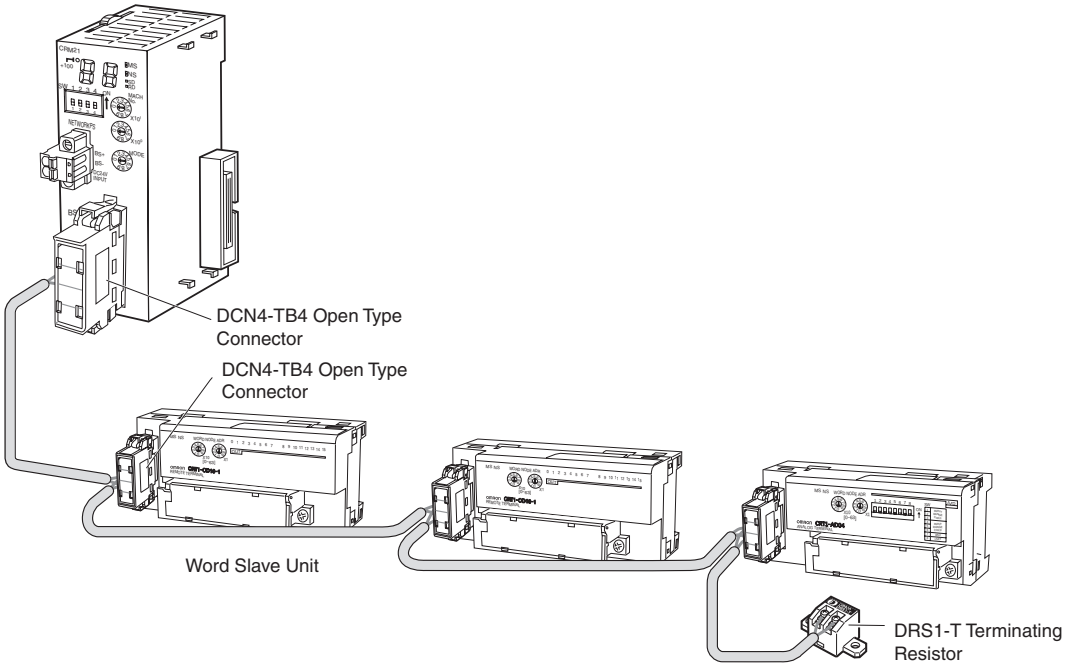


**Note** T-branching is also possible with a commercially available terminal block.

## Flat Cable I

**T-branching**

**Note** T-branches and a multidrop connections can be used together.

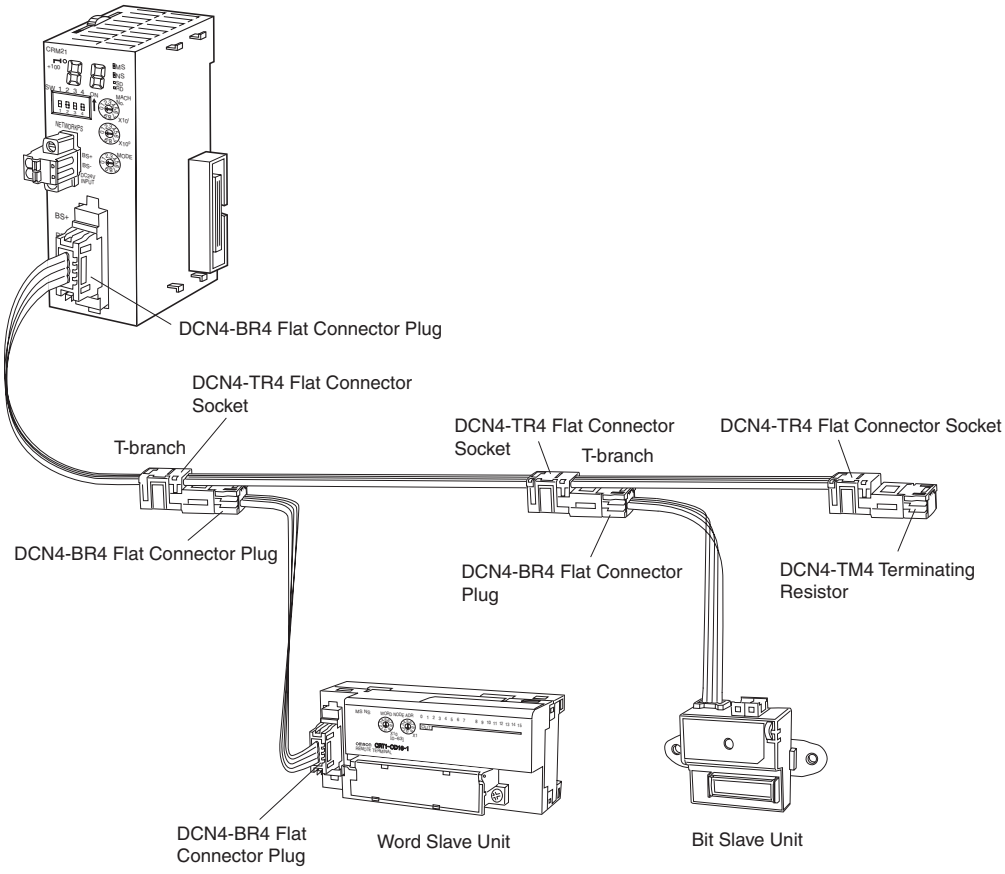


**Multidrop Connections**

**Note** T-branches and multidrop connections can be used together.

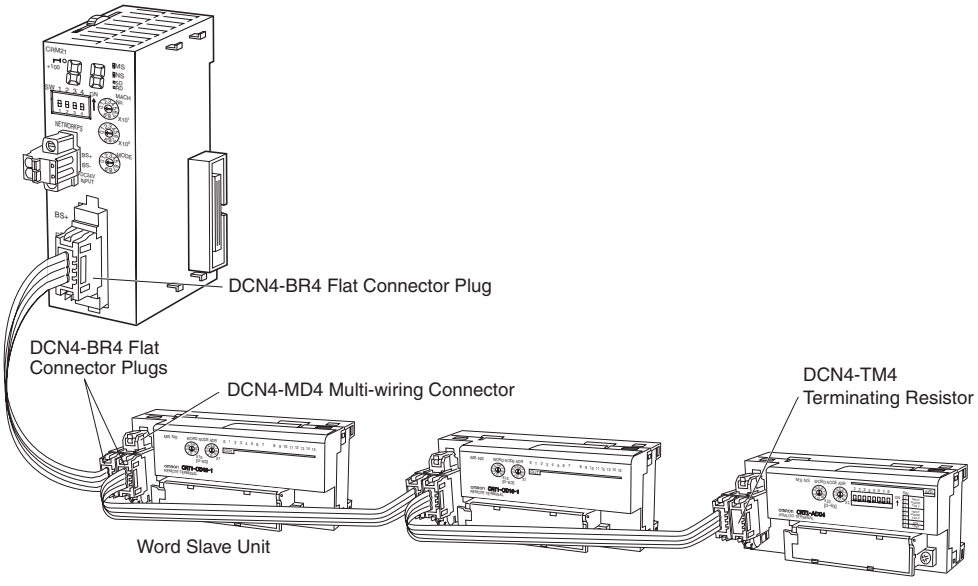

## 4-2-2 Connecting to Units

### Connecting the Trunk Line to the Master Unit

**Round Cable I or II**

A DCN4-TB4 Open Type Connector is used.

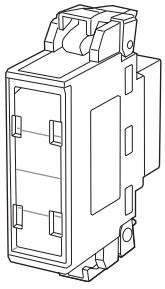

Orient the Open Type Connector so that surface with the open terminals is facing to the left and press in the Open Type Connector until it clicks into place.

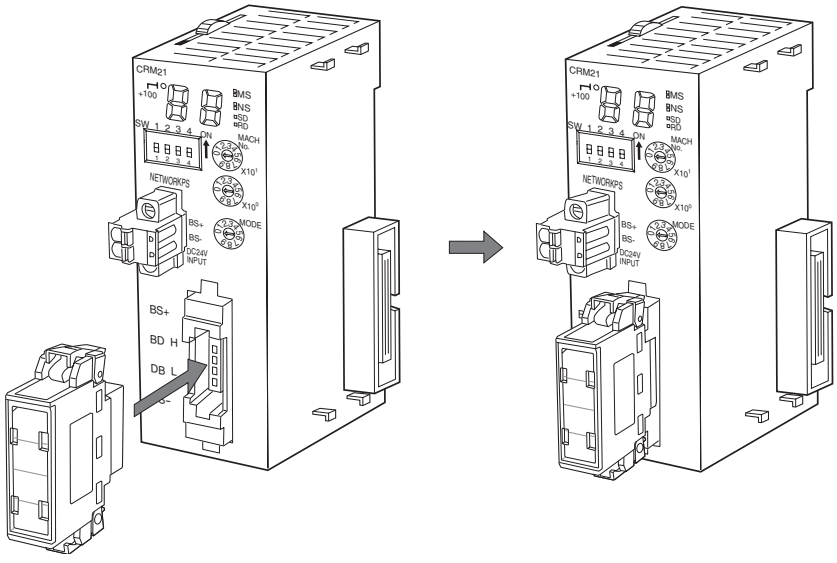


**Note** To remove an inserted Connector, hold the latches on both sides, and pull out the Connector.

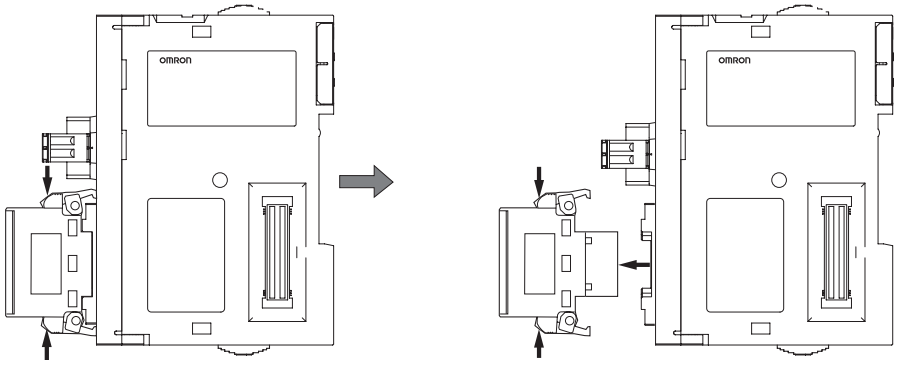


**Flat Cable I**

A DCN4-BR4 Flat Connector Plug is connected to the communications connector on the Master Unit. Refer to *4-3 Preparing and Mounting Flat Connectors*.

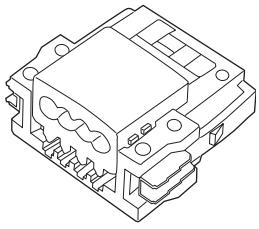

Be sure the face of the Connector on which line colors are indicated (red, white, blue, and black) is facing to the left and press in the Connector until it clicks into place.

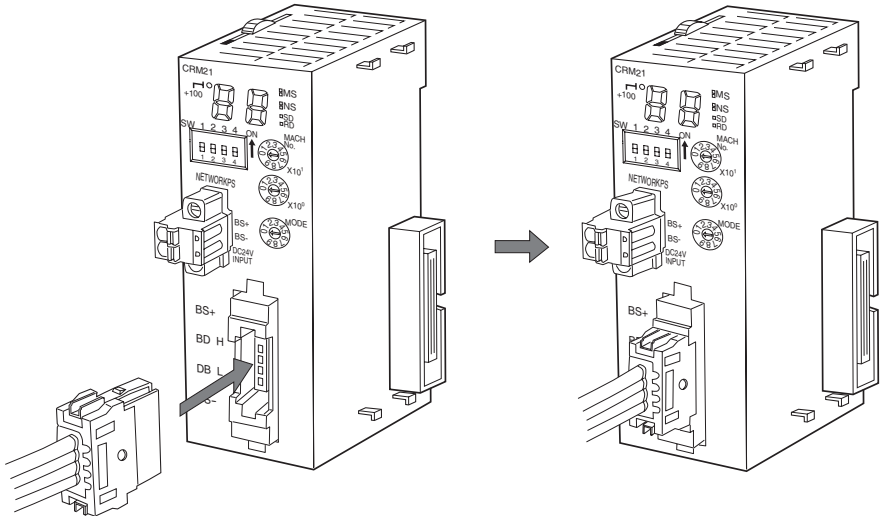


**Note** To remove an inserted Connector, hold the latches on both sides, and pull out the Connector.

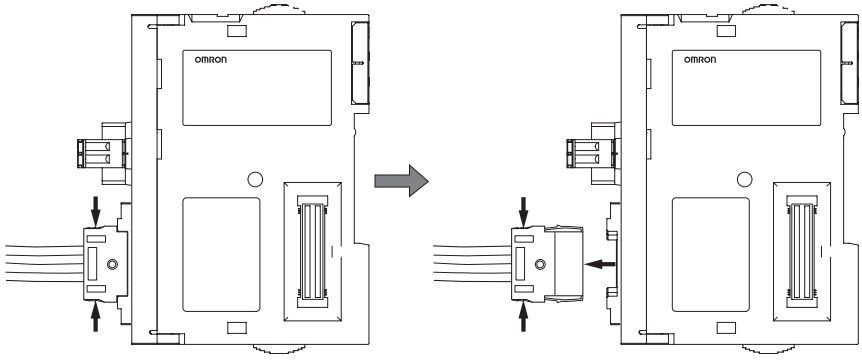


**Flat Cable II**

A DCN4-BR5 Flat Connector Plug is connected to the communications connector on the Master Unit. Refer to *4-3 Preparing and Mounting Flat Connectors*.

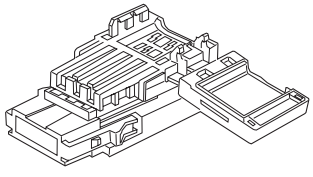

Orient the Connector so that the white line on the cable is facing to the left and press in the Connector until it clicks into place.

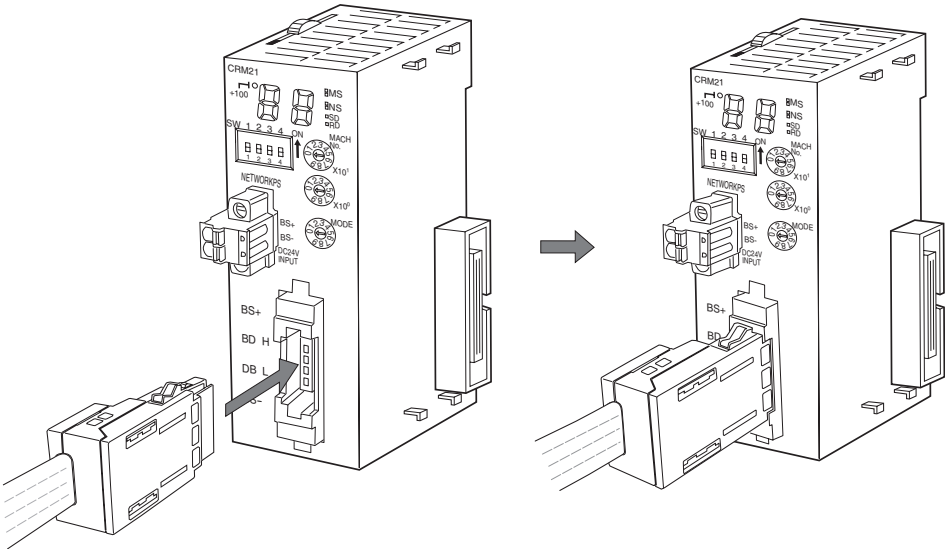


**Note** To remove an inserted Connector, hold the latches on both sides, and pull out the Connector.

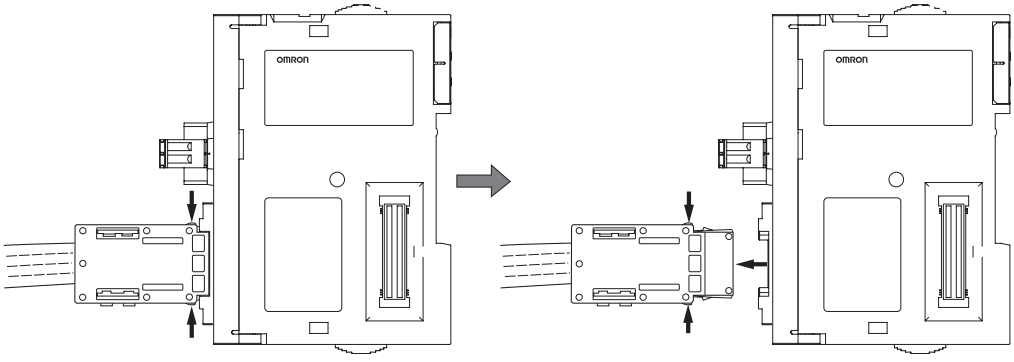


## 4-2-3 Branching a Communications Cable

There are two ways to branch the trunk line, sub-trunk lines, and branch lines: T-branches and multidrop connections.

### T-branching

#### Round Cable I or II

Use a commercially available relay terminal block, and connect the cable wires to the block.

■ **Example for Round Cable I**

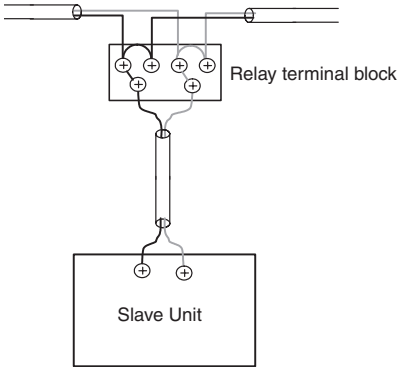

**Note** Attach a M3 crimp terminal to the cable wire before you connect the wire to a terminal block.

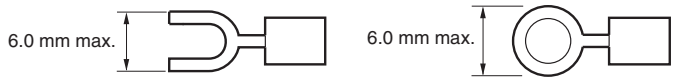


**Flat Cable I**

Attach a DCN4-BR4 Flat Connector Plug to a DCN4-TR4 Flat Connector Socket which has already been mounted to the communications cable.

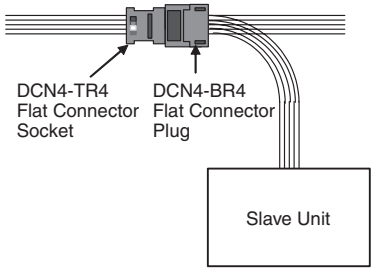


■ **Mounting Procedure**

Hold the Flat Connector Plug with the side with the line colors (i.e., red, white, black, and blue) facing down, and push the Connector Plug inward until it clicks into place.

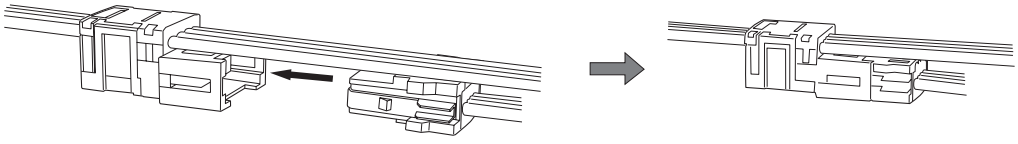

**Note** To remove a Connector Plug which has been attached, hold the latches on both sides of the Connector, and pull out the Connector Plug.

**Flat Cable II**

Attach a DCN5-BR4 Flat Connector Plug to a DCN5-TR4 Flat Connector Socket which has already been mounted to the communications cable.

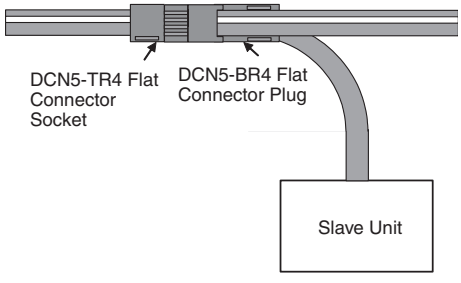


■ **Mounting Procedure**

Hold the Connector Plug with the side with white line facing down, and push the Connector Plug inward until it clicks into place.

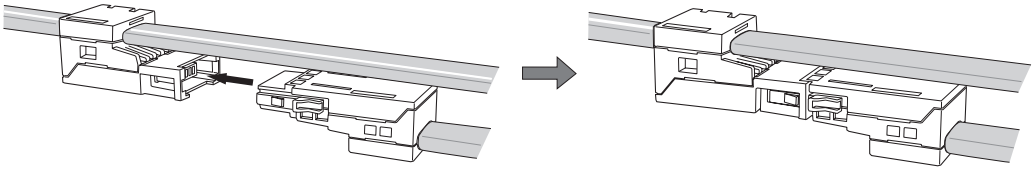

**Note** To remove a Connector Plug which has been attached, hold the latches on both sides of the Connector, and pull out the Connector Plug.

## Multidrop Connections

**Round Cable I or II**

A DCN4-TB4 Open Type Connector is attached to the communications connector of a Slave Unit or a Repeater Unit. This converts the communication connector to a M3 screw terminal block. Then the cable wires are connected to the Connector.

■ **Example for Round Cable I**

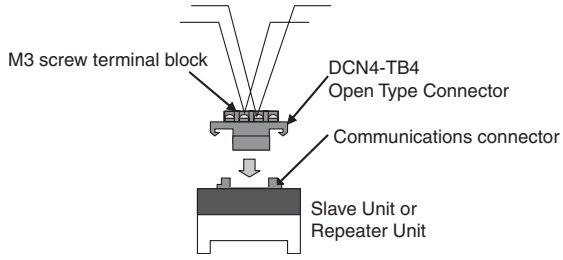


■ **Mounting Procedure**

***1,2,3...***

1. To mount a DCN4-TB4 Open Type Connector on the communications connector of the Unit, orient the Open Type Connector so that the opening side of the terminal cover is facing to the left, and press in the Connector until it clicks into place.

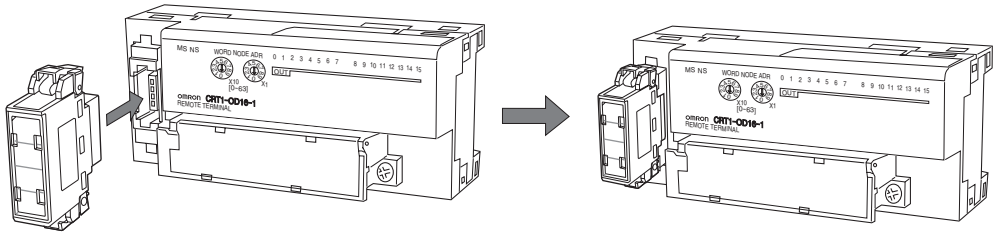

**Note** To remove the inserted Connector, hold the latches on both sides, and pull out the Connector.

2. Open the terminal cover of the Open Type Connector. Connect the cable wires to the BDH terminal or the communications data high, and to the BDL terminal or the communications data low on the terminal block. If a Round Cable II cable is being used, connect the other wires to the BS + terminal or the communications power supply +, and to the BS – terminal or the communications power supply –.

**Note** Attach a M3 crimp terminal to the cable wire before you connect the wire to a terminal block.

**Flat Cable I**

A DCN4-MD4 Multidrop Connector is attached to the communications connector of a Slave Unit or a Repeater Unit. Two DCN4-BR4 Flat Connector Plugs are mounted separately on two communications cables. The two Plugs are connected to the Multidrop Connector to make a branch.

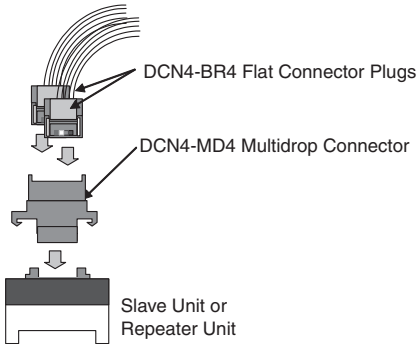


■ **Mounting Procedure**

***1,2,3...*** 1. Hold the Multidrop Connector so that the side with the number is facing to the left, and press the Connector to the communications connector of a Slave or a Repeater Unit until it clicks into place.

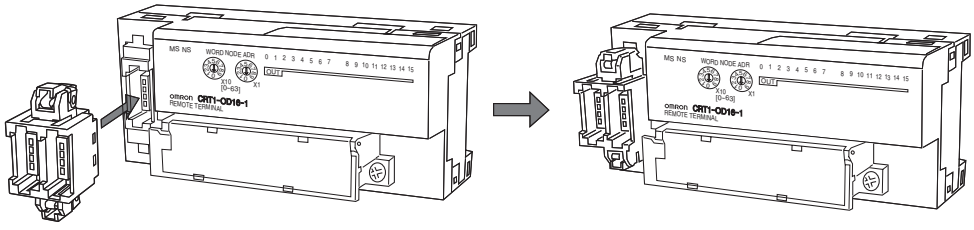

2. Hold the Flat Connector Plug so that the side with the line colors (i.e., red, white, black and blue) is facing to the left, and press in the Plug until it clicks into place. Repeat the same to have two Plugs connected to the Unit.

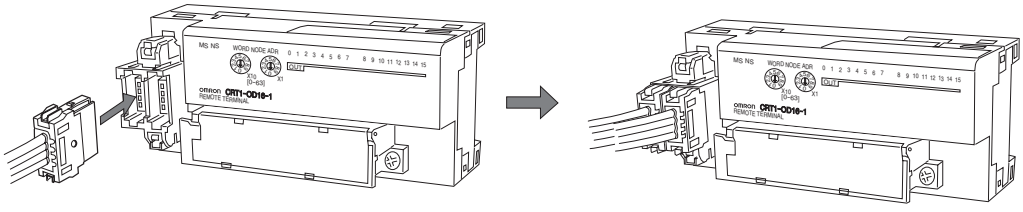

**Note** To remove the inserted Connector, hold the latches on both sides, and pull out the Connector.

**Flat Cable II** Multidrop connections are not supported.

## 4-2-4 Extending a Communications Cable

Flat Connectors can be used to extend cables for the trunk line, sub-trunk lines, branch lines, and sub-branch lines to maximum ten levels. The maximum trunk line length is the upper limit of extension of each type of cable. Refer to *1-2-1 Cable Types, Maximum Distances, and Number of Slave Units*.

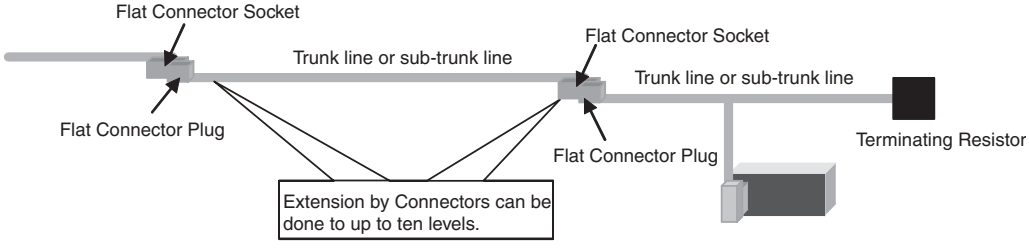

**Flat Cable I**

Attach a DCN4-BR4 Flat Connector Plug to a DCN4-TR4 Flat Connector Socket which has already been mounted to the communications cable.

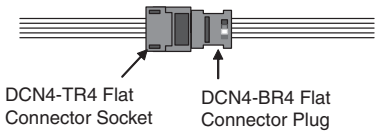


■ **Mounting Procedure**

Hold the Flat Connector Plug with the side with the line colors (i.e., red, white, black, and blue) facing down, and push the Flat Connector Plug inward until it clicks into place.

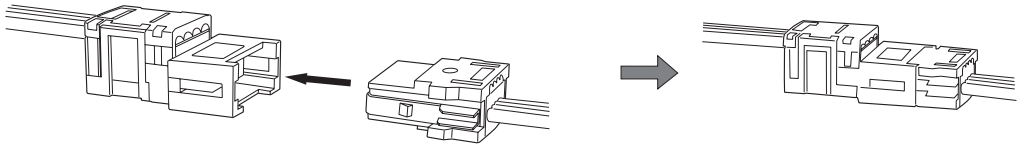

**Note** To remove a Connector Plug which has been attached, hold the latches on both sides of the Connector, and pull out the Connector Plug.

**Flat Cable II**

Attach a DCN5-BR4 Flat Connector Plug to a DCN5-TR4 Flat Connector Socket which has already been mounted to the communications cable.

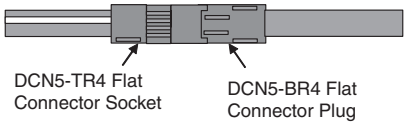


■ **Mounting Procedure**

Hold the Flat Connector Plug with the side with the white line facing down, and push the Flat Connector Plug inward until it clicks into place.

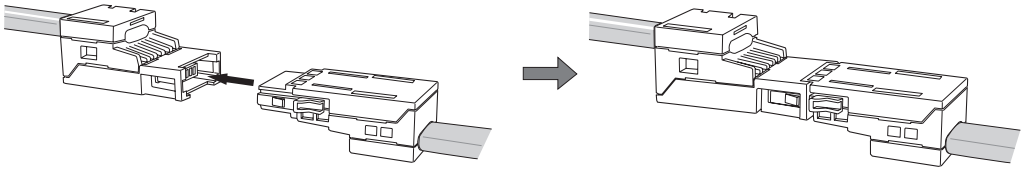

**Note** To remove a Connector Plug which has been attached, hold the latches on both sides of the Connector, and pull out the Connector Plug.

## 4-2-5 Connecting Terminating Resistors

A Terminating Resistor must always be connected to the trunk line and each sub-trunk line on its opposite end from the Master Unit or a Repeater Unit.

**Round Cable I**

The cable wires are connected to a DRS1-T Terminating Resistor.

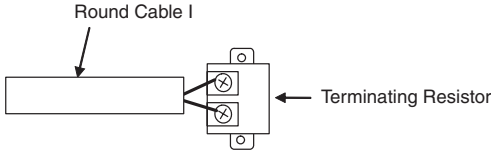

■ **Connecting Procedure**

Connect the cable wires to the Terminating Resistor, and tighten the screws. The Terminating Resistor has no polarity. Either wire can be connected to either terminal regardless of their colors.

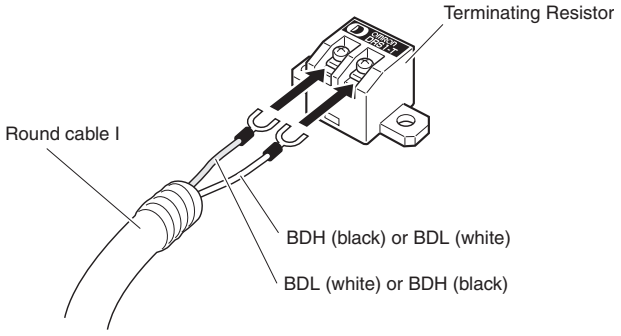


**Note** Attach a M3 crimp terminal to the cable wire before you connect the wire to a Terminal Resistor.

**Round Cable II**

A DCN4-TR4 Flat Connector Socket is mounted on the Round Cable II cable. Then a DCN4-TM4 Terminating Resistor is attached to the Socket.

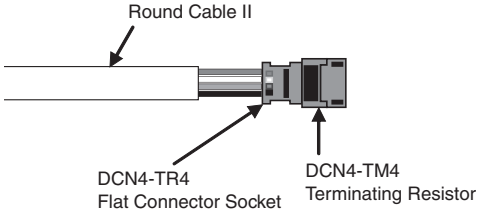


■ **Mounting Procedure**

Press the Terminating Resistor into the Socket until it clicks into place.

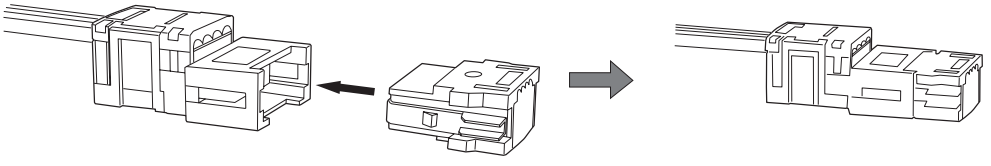

**Note** To remove a Terminal Resistor Plug which has been attached, hold the latches on both sides of the Resistor, and pull it out.

**Flat Cable I**

A DCN4-TR4 Flat Connector Socket is mounted at the end of the communications cable. Then a DCN4-TM4 Terminating Resistor is attached to the Socket.

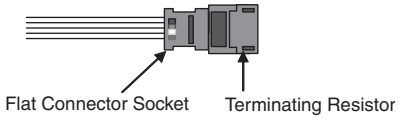


■ **Mounting Procedure**

Press the Terminating Resistor into the Socket until it clicks into place.

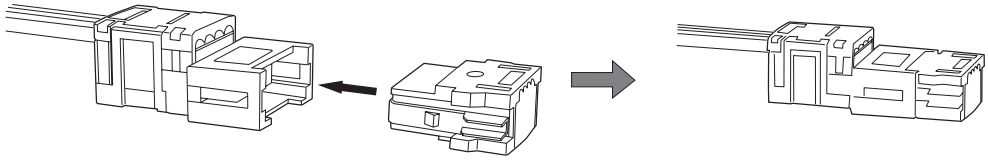

**Note** To remove a Terminal Resistor which has been attached, hold the latches on both sides of the Resistor, and pull it out.

When a Slave Unit or a Repeater Unit has a multidrop connection, the Terminal Resistor can be directly attached to the Multidrop Connector that is mounted on the Unit. This is only applicable with Flat Cable I cables.

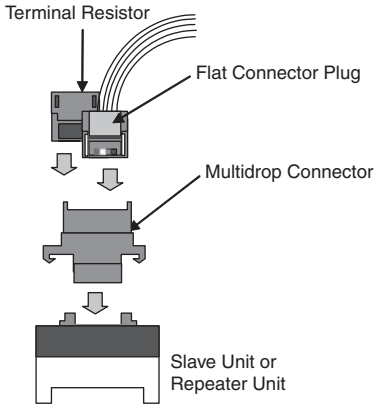


## Flat Cable II

A DCN4-TR4 Flat Connector Socket is mounted on the communications cable. Then a DCN4-TM4 Terminating Resistor is attached to the Socket.

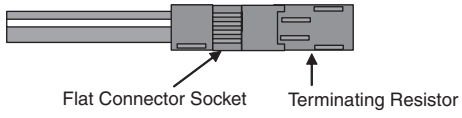


### ■ Mounting Procedure

Press the Terminating Resistor into the Socket until it clicks into place.

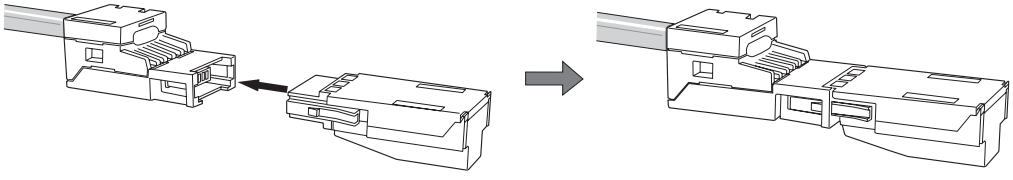

**Note** To remove a Terminal Resistor which has been attached, hold the latches on both sides of the Resistor, and pull it out.

# 4-3 Preparing and Mounting Flat Connectors

When you connect a Terminal Resistor to a Round Cable II cable, connect a Flat Cable I or II cable to the Unit, or when you branch or extend the line, you must prepare a Flat Connector and mount it on the cable.

**Note**

(1) Flat Connectors are not reworkable. Once they are connected they cannot be removed and connected again.

(2) Hold the Flat Connector body to plug in or pull out the connector.

(3) After connecting the Flat Connector, pull it lightly to confirm the connection is secured.

## Connectors Used

| Name | Appearance | Model | Application |
|---|---|---|---|
| Flat Connector Socket | 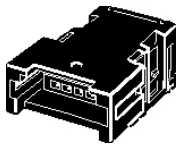 | DCN4-TR4 | Used as a set with the DCN4-BR4 Flat Connector Plug in the following applications:<br>• Extending the trunk line or sub-trunk lines.<br>• T-branching branch lines from the trunk line or sub-trunk lines.<br>• T-branching sub-branch lines from a branch line. |
| | | | Used independently when connecting a DCN4-TM4 Terminating Resistor to the end of the trunk line or a sub-trunk line. |
| Flat Connector Plug | 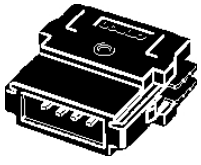 | DCN4-BR4 | Used as a set with the DCN4-TR4 Flat Connector Socket in the following applications:<br>• Extending the trunk line or sub-trunk lines.<br>• T-branching branch lines from the trunk line or sub-trunk lines.<br>• T-branching sub-branch lines from a branch line. |
| | | | Used independently in the following applications:<br>• Connecting Communications Cable to a Unit.<br>• Connecting Communications Cable to a DCN4-MD4 Multidrop Connector (when a multidrop connection is used). |
| Flat Connector Socket | 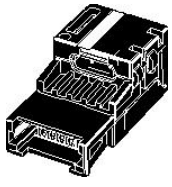 | DCN5-TR4 | Used as a set with the DCN5-BR4 Flat Connector Plug in the following applications:<br>• Extending the trunk line or sub-trunk lines.<br>• T-branching branch lines from the trunk line or sub-trunk lines.<br>• T-branching sub-branch lines from a branch line. |
| | | | Used independently when connecting a DCN5-TM4 Terminating Resistor to the end of the trunk line or a sub-trunk line. |
| Flat Connector Plug | 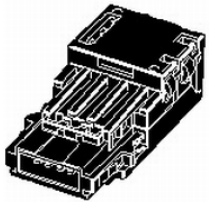 | DCN5-BR4 | Used as a set with the DCN5-TR4 Flat Connector Socket in the following applications:<br>• Extending the trunk line or sub-trunk lines<br>• T-branching branch lines from the trunk line or sub-trunk lines<br>• T-branching sub-branch lines from a branch line |
| | | | Used independently to connect Communications Cable to a Unit. |

## Tools Required

| Name | Appearance | Model | Application |
|---|---|---|---|
| Pliers | | DWT-A01 | Crimping tool for DCN4-TR4 Flat Connector Socket or DCN4-BR4 Flat Connector Plug |
| Pliers | | DWT-A02 | Crimping tool for DCN5-TR4 Flat Connector Socket or DCN5-BR4 Flat Connector Plug |

## 4-3-1 Round Cable II

A Flat Connector must be mounted on a Round Cable II cable only when a Terminal Resistor is attached to it.

### Preparing and Mounting DCN4-TR4 Flat Connector Sockets

■ **Component Names**

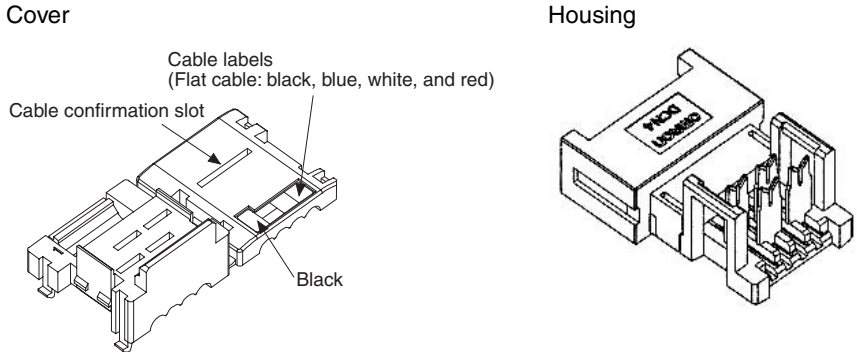


■ **Preparing the Cable**

At the tip of cable, make a cut line perpendicular to the cable length on the sheath, and strip the sheath.

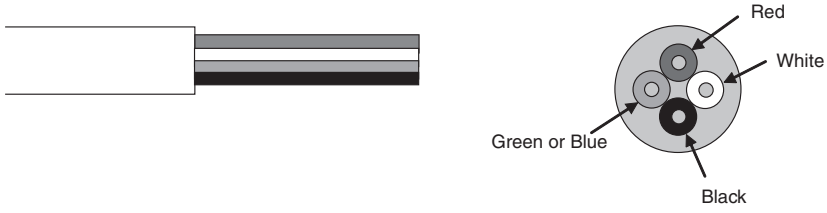


■ **Setting the Cable Stopper**

Set the cable stopper. Close the cover. Secure the hooks. Press down on the cable stopper until it clicks into place.

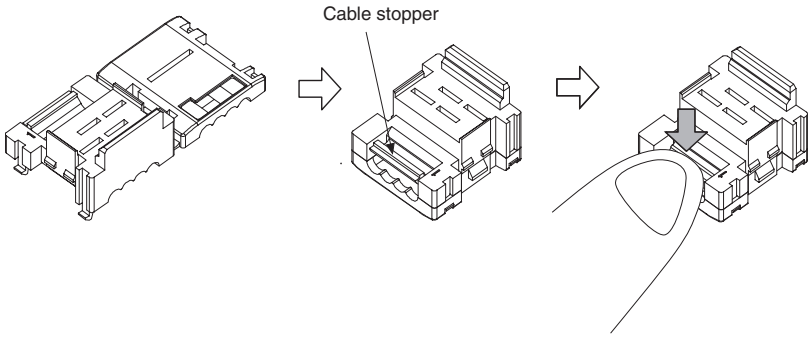


■ **Connecting the Cable**

Confirm that the cable colors match the cable labels and then insert the unsheathed cable tip all the way into the cable stopper in the cover.

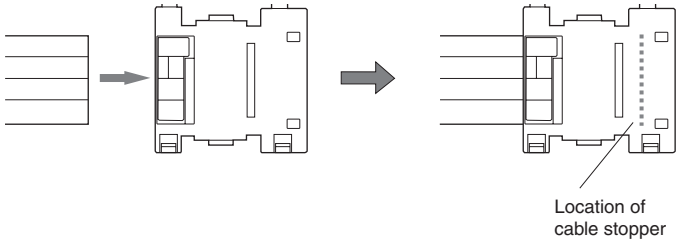


■ **Attaching the Housing**

Confirm the colors again, and temporarily secure the housing to the cover.

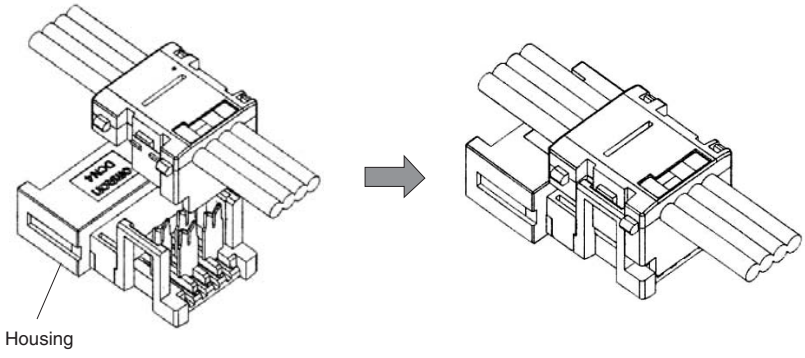


**Note** Once it is attached, the housing cannot be removed from the cover. If you attempt to separate the housing and the cover forcefully, you may damage the connector.

■ **Pressure-welding the Connector**

Use the DWT-A01 Pliers to pressure-weld the connector.

***1,2,3...*** 1. Align the center (see arrows) of the connector cover with the center of the pressure-welding block on the DWT-A01 Pliers.

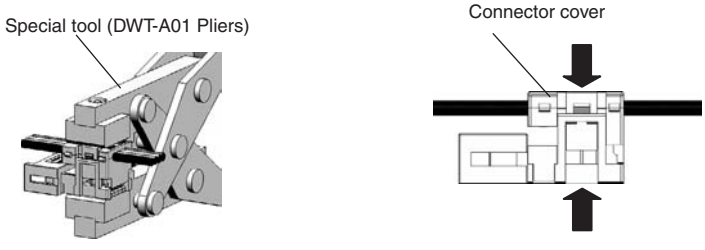

2. Squeeze firmly on the Pliers until the lock on the connector clicks into place.

   **Note** (a) Do not pressure-weld the connector cover at the edges.
   (b) Do not pressure-weld the connector cover at the back of the pressure-welding block.
   (c) Set the connector in the correct orientation.

DCN4-TR4 Standard Flat Cable Trunk Line Pressure-welded Connector

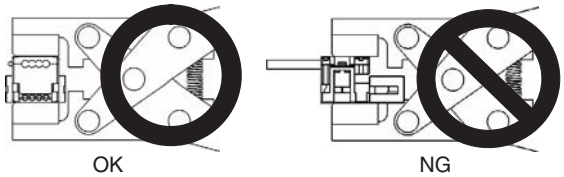


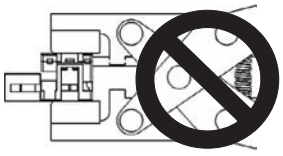


3. After attaching the cable, confirm that it is properly pressure-welded.

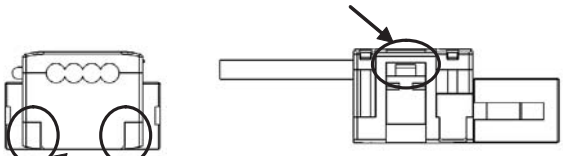


## 4-3-2 Flat Cable I

### Preparing and Mounting DCN4-TR4 Flat Connector Sockets

■ **Component Names**

Cover

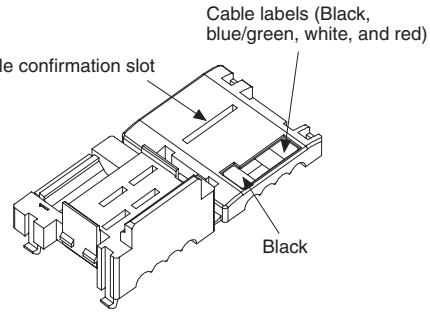


Housing

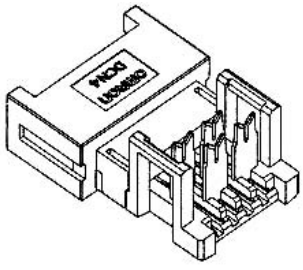

■ **Cutting the Cable**

This step is required only for extending the cable or connecting a Terminating Resistor.

Cut the cable perpendicular to its length.

To prevent short-circuits, use a sharp cutting tool such as nipper. Confirm there is no remaining wire coming out.

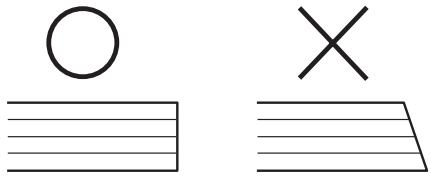

■ **Setting the Cable Stopper**

This step is required only for extending the cable or connecting a Terminating Resistor.

For these purposes, the cable can end in the connector. Set the cable stopper in advance. Close the cover. Secure the hooks. Press down on the cable stopper until it clicks into place.

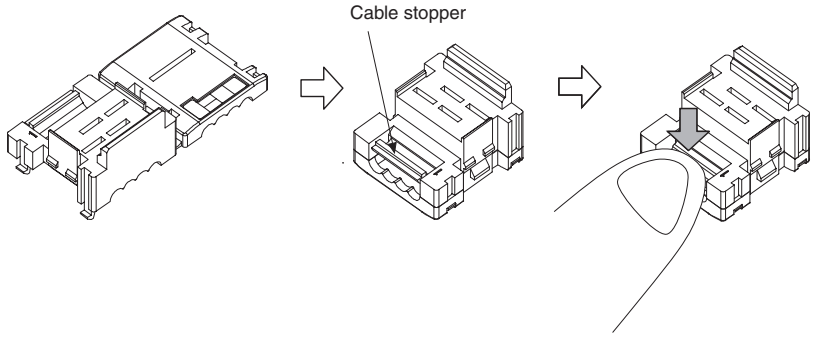


■ **Mounting the Cable**

■ **T-branching**

***1,2,3...*** 1. Confirm that the cable colors match the cable labels, and then place the cable in the cover.

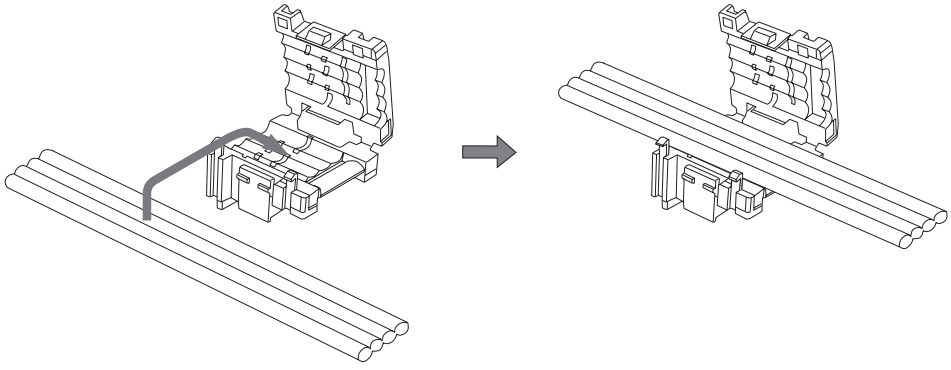

2. Close the cover to sandwich the cable and secure the hook.

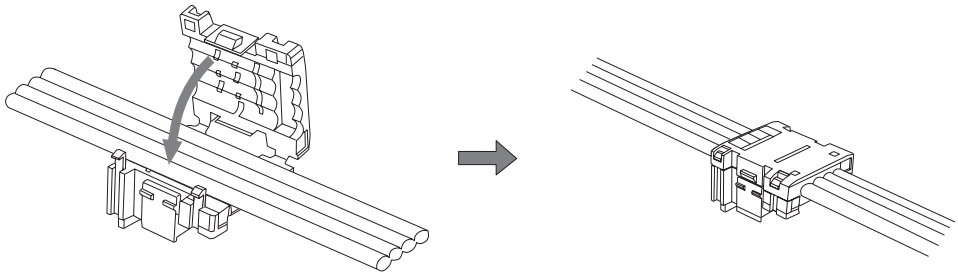

■ **Extending or Connecting a Terminating Resistor**

Insert the cable tip all the way into the cable stopper in the cover.

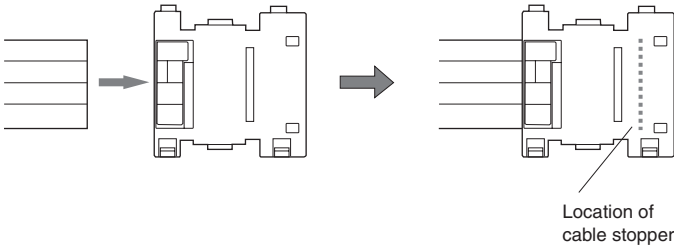


■ **Attaching the Housing**

Confirm the colors again, and temporarily secure the housing to the cover.

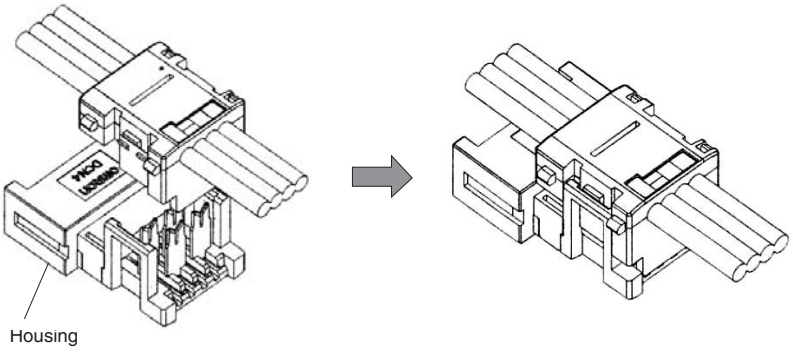


**Note** Once it is attached, the housing cannot be removed from the cover. If you attempt to separate the housing and the cover forcefully, you may damage the connector.

■ **Pressure-welding the Connector**

Use the DWT-A01 Pliers to pressure-weld the connector.

***1,2,3...*** 1. Align the center (see arrows) of the connector cover with the center of the pressure-welding block on the DWT-A01 Pliers.

2. Squeeze firmly on the Pliers until the lock on the connector clicks into place.

   **Note** (a) Do not pressure-weld the connector cover at the edges.
   (b) Do not use the back of pressure-welding block to pressure-weld the connector cover.
   (c) Set the connector in the correct orientation.

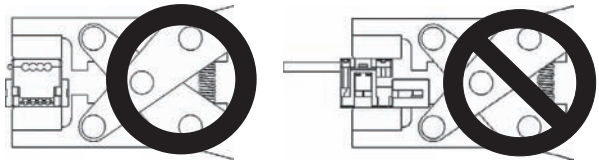


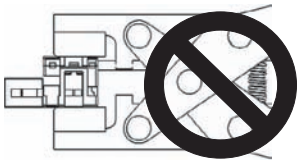


3. Confirm that the cable is properly pressure-welded as shown below.

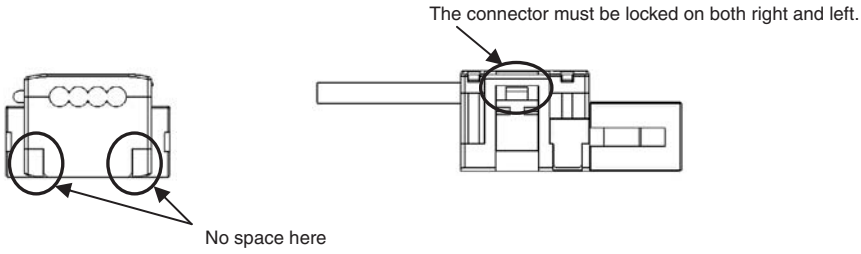


## Preparing and Mounting DCN4-BR4 Flat Connector Plugs

### ■ Component Names

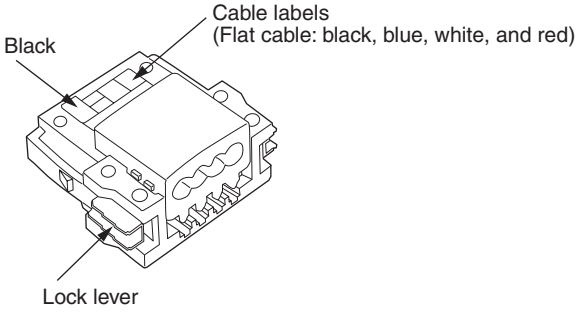


### ■ Cutting the Cable

Cut the cable perpendicular to the length.

To prevent short-circuits, cut the cable with a sharp blade and be sure that there are no whiskers from the conductors.

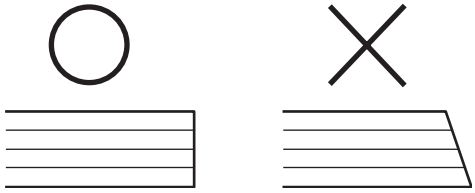

■ **Attaching the Cable**

***1,2,3...***

1. Align the cable labels and cable colors and insert the cable into the connector.
2. Confirm that the cable is inserted all the way to the back. (The cover is semi-transparent.)

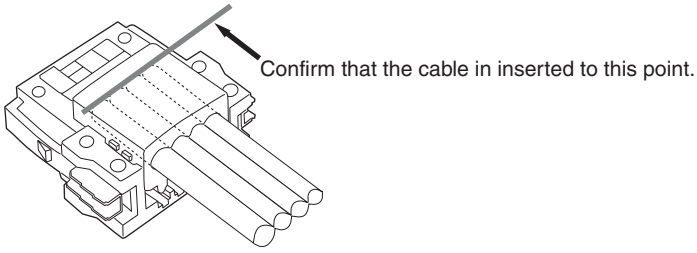


■ **Pressure-welding the Connector**

The connector is pressure-welded using the DWT-A01 Pliers.

***1,2,3...***

1. Align the center (see arrow) or the connector cover with the center of the pressure-welding block on the Pliers and set the cover in the Pliers.

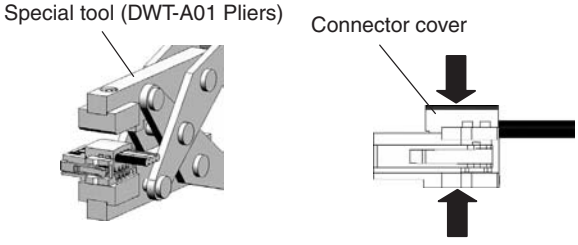


2. Squeeze firmly on the Pliers until the lock on the connector clicks into place.

**Note** (a) Do not pressure-weld the connector cover at the edges.
(b) Do not pressure-weld the connector cover at the back of the pressure-welding block.
(c) Set the connector in the correct orientation.

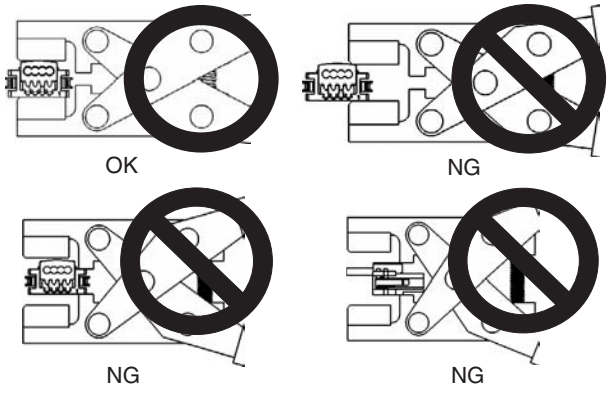

3. After attaching the cable, confirm that it is properly pressure-welded.

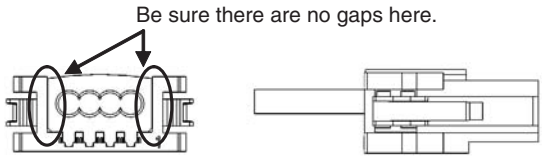


## 4-3-3 Flat Cable II

### Preparing and Mounting DCN5-TR4 Flat Connector Sockets

■ **Component Names**

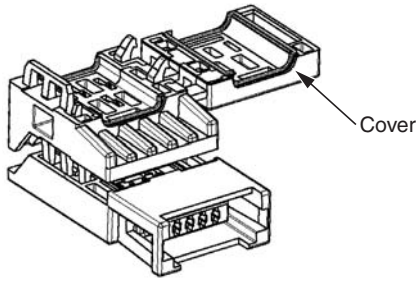


**1) Cutting the Cable**

This step is required only for extending the cable or connecting a Terminating Resistor.

At the tip of cable, cut the cable perpendicular to the cable length. To prevent short-circuits, use a sharp cutting tool such as nipper. Confirm there is no remaining wire coming out.

To prevent short-circuits, cut the cable with a sharp blade and be sure that there are no whiskers from the conductors.

**2) Setting the Cable Stopper.**

This step is required only for extending the cable or connecting a Terminating Resistor.

For these purposes, the cable can end in the connector. Place the cable stopper in advance. Put the cable in the cover. Position the cable so that the cable tip touches the stopper.

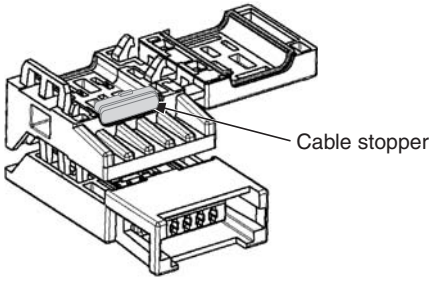

**3) Attaching the Cable**

***1,2,3...*** 1. Hold the cable with the white line facing up and near the cover opening.

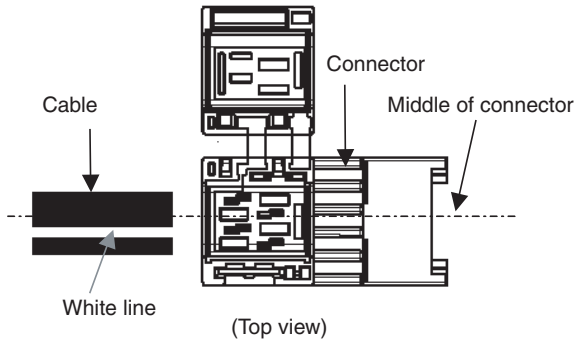


**T-branch Connections**

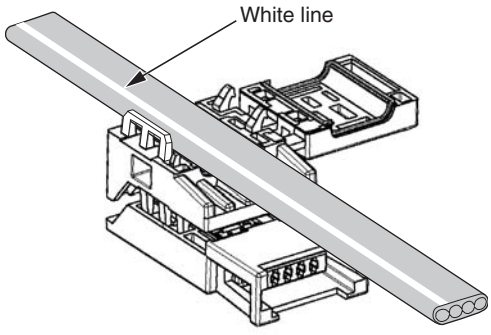


**Extending the Cable or Connecting a Terminating Resistor**

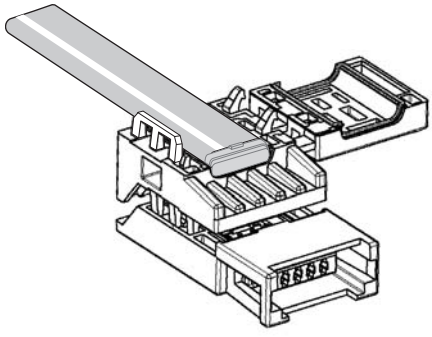

2. Hold the cable to prevent dislocation and close the cover.

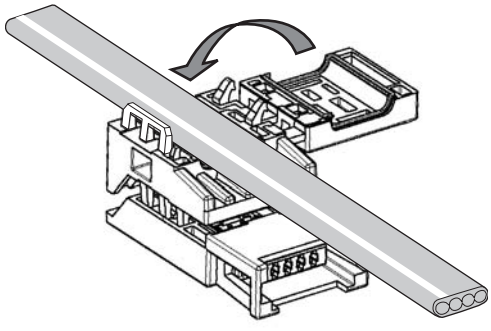

**Note** For extension or to connect a Terminating Resistor, make sure the cable tip is inserted to the cable stopper and will not come out.

**4) Pressure-welding the Connector**

The connector is pressure-welded using the DWT-A02 Pliers.

***1,2,3...*** 1. Align the center (see arrows) of the connector cover with the center of the pressure-welding block on the DWT-A02 Pliers.

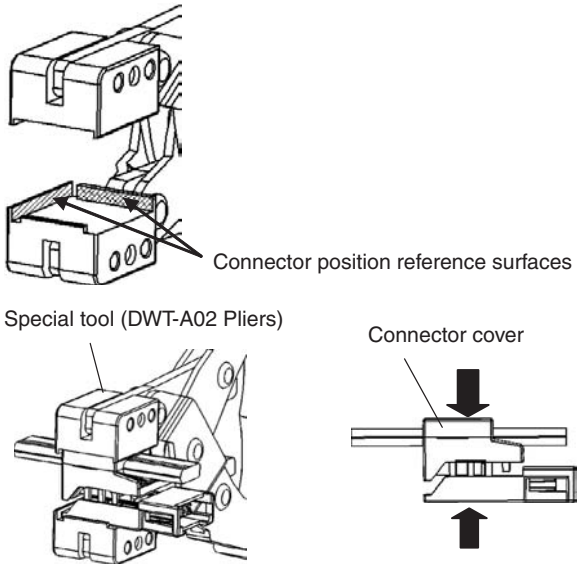


2. Squeeze firmly on the Pliers until the lock on the connector clicks into place.
3. After attaching the cable, confirm that it is properly pressure-welded.

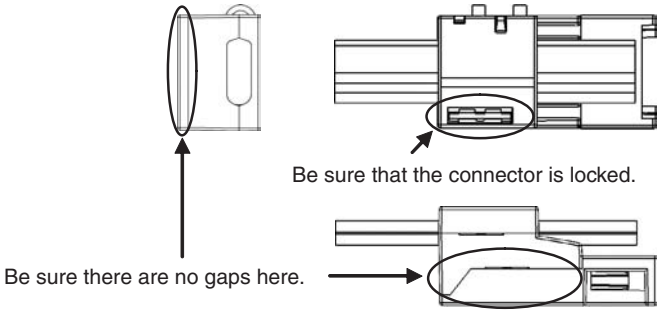


## Preparing and Mounting DCN5-BR4 Flat Connector Plugs

### ■ Component Names

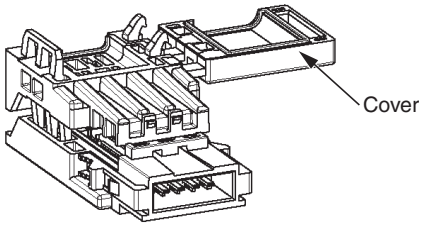

**1) Cutting the Cable**

Cut the cable perpendicular to the length.

To prevent short-circuits, use a sharp cutting tool such as nipper. Confirm there is no remaining wire coming out.

**2) Attaching the Cable**

***1,2,3...*** 1. Hold the cable with the white line facing up and near the cover opening

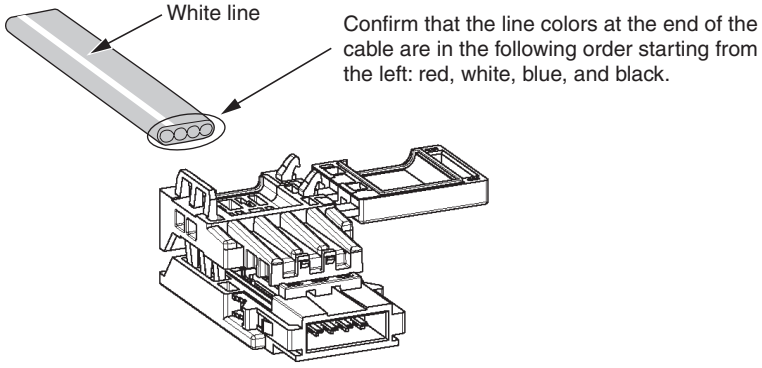


2. Hold the cable so that it does not move and close the cover.

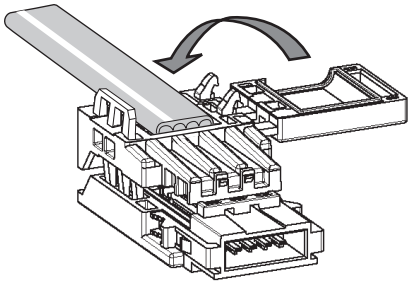

**3) Pressure-welding the connector**

The connector is pressure-welded using the DWT-A02 Pliers.

***1,2,3...*** 1. Align the center (see arrows) of the connector cover with the center of the pressure-welding block on the DWT-A02 Pliers.

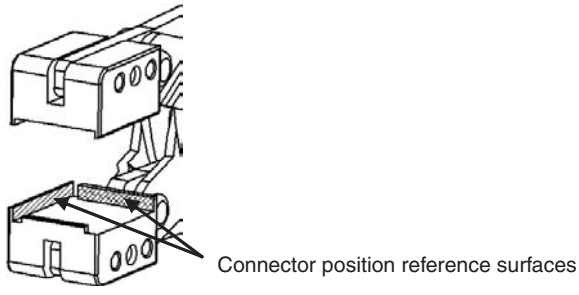

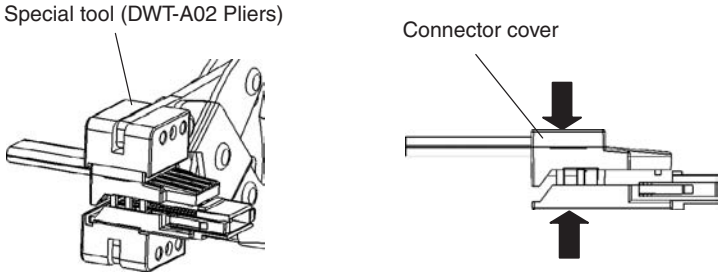


2. Squeeze firmly on the Pliers until the lock on the connector clicks into place.
3. After attaching the cable, confirm that it is properly pressure-welded.

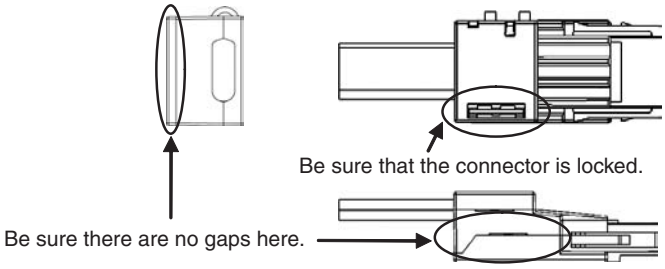


# 4-4 Power Supply Wiring

The following power supplies are required to operate the CompoNet Network.

- Communications power supply: Used for communications with individual Units and for internal circuit operations of Units.
- I/O power supply: Used for I/O operations for Units with external I/O.

The method for supplying communications power and I/O power depends on the types of cable and Slave Unit that are used. The differences are shown in the following table.

| Power supply | Cable type | Communications power supply method | I/O power supply method |
|---|---|---|---|
| Multi-power supply | Round Cable I | Supplied to Units individually. | Supplied to individual Units separately from the communications power supply. |
| | Round Cable II, Flat Cable I, or Flat Cable II | Supplied through the Communications Cable by supplying power to the Master Unit. | |
| Network power supply | Round Cable I | Not supported | |
| | Round Cable II, Flat Cable I, or Flat Cable II | The communications power supply and the I/O power supply are provided together through Communications Cable. | |

## Multi-power Supply

### Round Cable I

#### ■ Communications Power

Power is supplied individually to the power terminals on the communications connectors of each Unit. Power is also supplied individually to the power terminals on the PORT1 connectors of each Repeater Unit.

■ **I/O Power**

Power is supplied separately from the communications power to the I/O power supply terminals on each Unit. To prevent noise generation, the power must be supplied separately from the communications power supply.

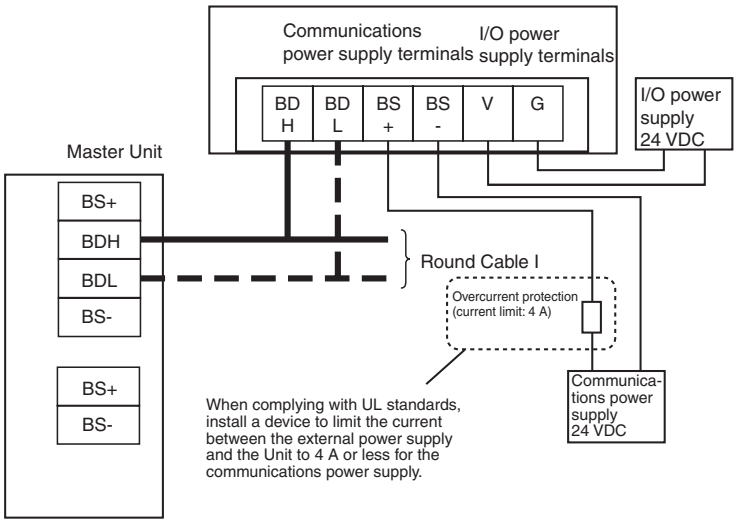


**Round Cable II, Flat Cable I, or Flat Cable II**

■ **Communications Power**

Power is supplied through the communications power supply connector on the Master Unit. Power is also supplied through the downstream port of the communications power supply connector on each Repeater Unit.

■ **I/O Power**

Power is supplied separately from the communications power to the I/O power supply terminals on each Unit.

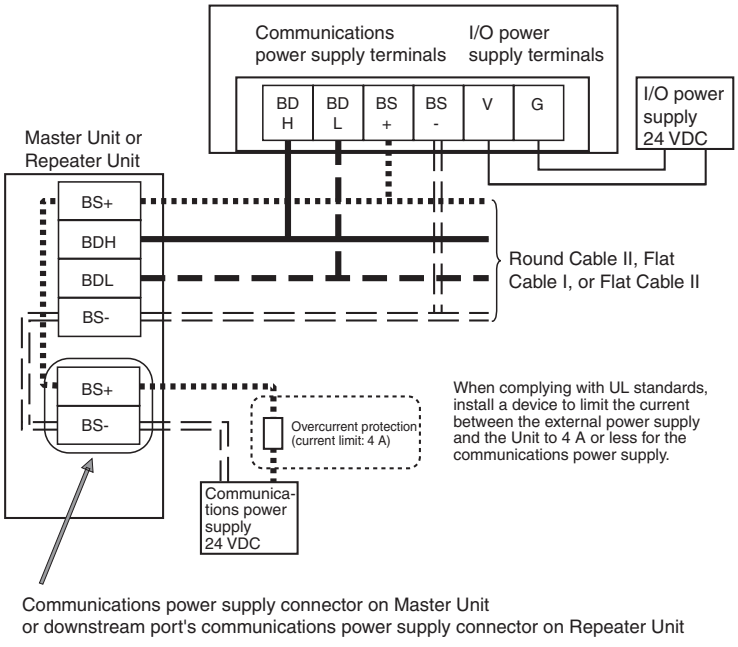

**Network Power Supply**

The communications power and the I/O power are supplied together. That is there is no need to supply power to Units separately. The power is supplied commonly through the communications power supply connector on the Master Unit or through the downstream port of communications power supply connector on the Repeater Unit. Bit Slave Units have Flat Cables attached.

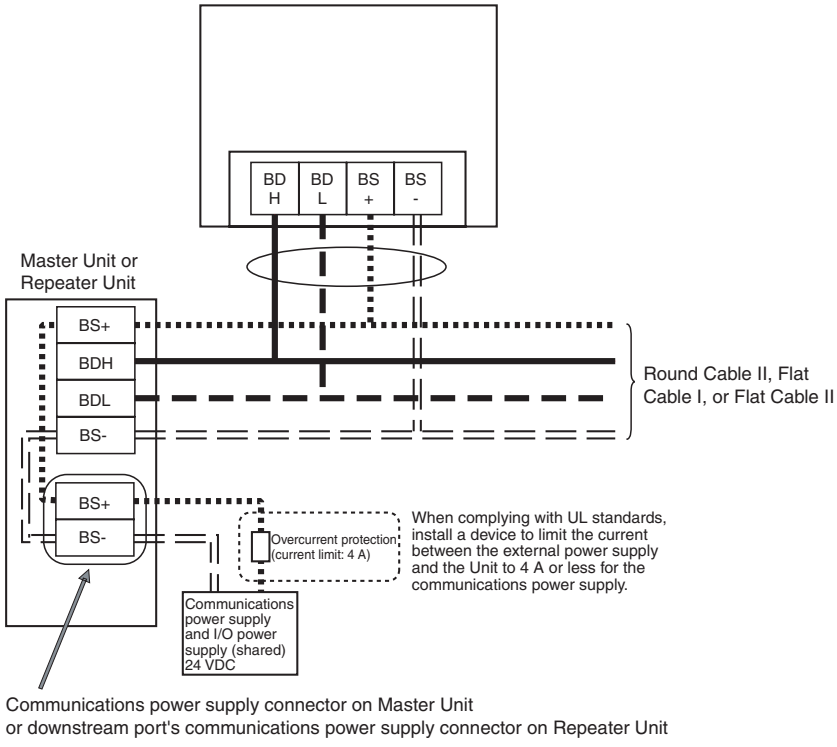


## 4-4-1 Connecting the Communications Power Supply

The communications power supply must meet the following specifications. Commercially available power supply units can be used. An OMRON S82-series Power Supply Unit is recommended to supply communications power to a CompoNet network.

| Item | Specification |
|---|---|
| Output voltage | 24 VDC ±10% |
| Output ripple | 600 mVp-p |
| Output current | Use a power supply that has a capacity equivalent or exceeding the following total current consumption:<br>• The current consumption of all of Word Slave Units and Repeater Units, and<br>• The current consumption of all of Bit Slave Units and the external I/O devices |
| Insulation | Between outputs and AC power, and between outputs and enclosure grounding |

**Note** With the Slave Units with a network power supply, the external I/O devices are also supplied power through the communications power supply connected to the Master Unit or a Repeater Unit via Flat Cables. Therefore, the output current of communications power supply must include the current consumption and the actual load current of the external I/O devices the calculation.

The following is a calculation example of the current consumption for a Bit Slave Unit's communications power supply.

1. Input Units

Current consumption of the communications power supply
= Current consumption of a Bit Slave for communications
+ (Input current of a Bit Slave x Number of used channels)
+ (Current consumption of a sensor x Number of used sensors)

2. Output Units
   Current consumption of the communications power supply
   = Current consumption of a Bit Slave for communications
   + (Actual load current of an actuator x Number of actuators)
3. I/O Units
   Current consumption of the communications power supply
   = Current consumption of a Bit Slave for communications
   + (Input current of a Bit Slave x Number of used channels)
   + (Current consumption of a sensor x Number of used sensors)
   + (Actual load current of an actuator x Number of actuators)

## 4-4-2 Connecting the Communications Power Supply

### Round Cable II, Flat Cable I, or Flat Cable II

**Master Unit Connections**

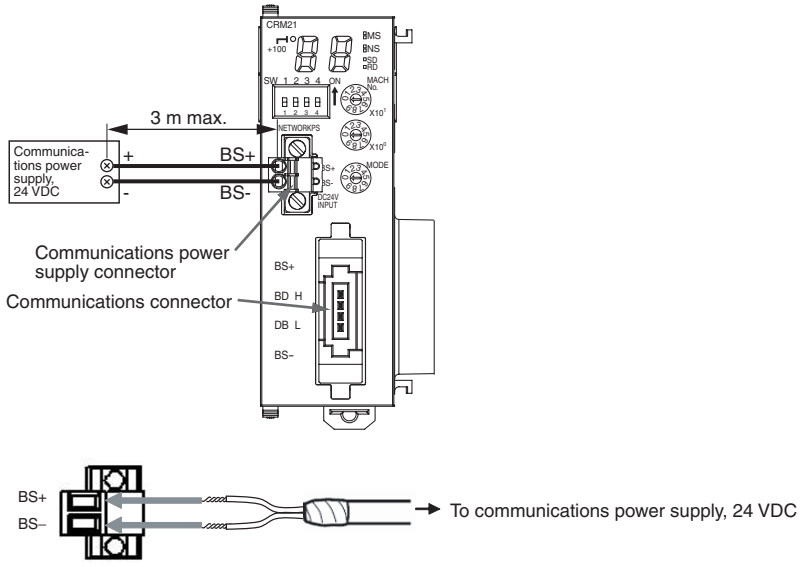


### Round Cable I

**Slave Unit Connections**

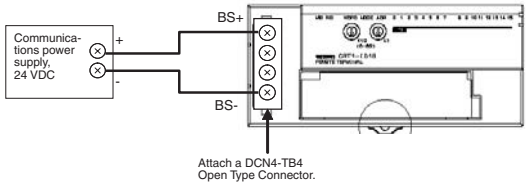


## 4-4-3 Current Consumption of a Slave Unit or a Repeater Unit

Refer to the *CRT1-series CompoNet Slave Units and Repeater Unit Operation Manual* (Cat. No. W457-E1).

## 4-4-4 Communications Power Supply Wiring Example

### Round Cable I

When Round Cable I cables are used, the communications power cannot be supplied through the communications cables. The power must be supplied to each Slave and Repeater Unit through other cables. Furthermore, the I/O power must be supplied separately to the Slave Units which need I/O power, i.e., Slave Untis with a multi-power supply. There is no need, however, to provide an external communications power supply to the Master Unit.

**Without Repeater Units**

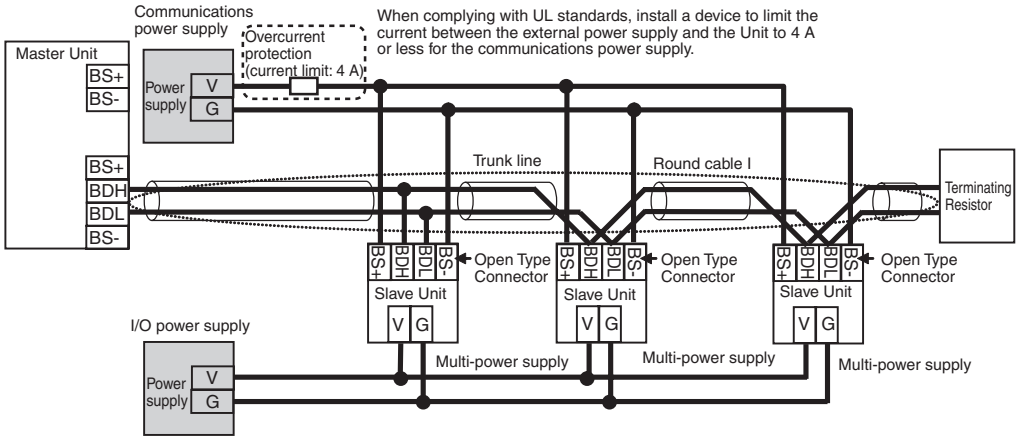

### With Repeater Units

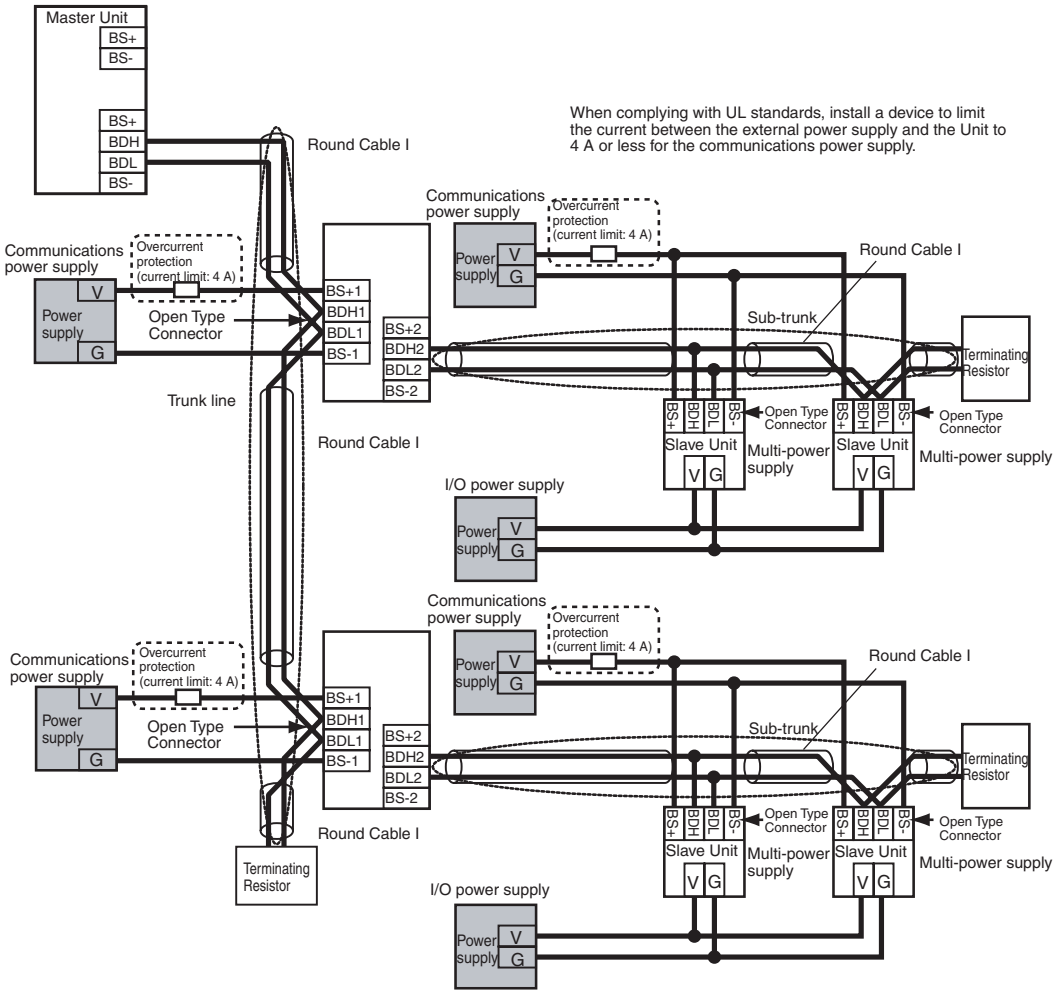


**Note** Depending on the I/O device to which it is connected, an I/O power supply connected to a multi-power supply Slave Unit may be a source of noise. Even when the communications power is supplied collectively to all Slave Units, a separate I/O power supply must be provided so that noise does not affect the network.

## Round Cable II, Flat Cable I, or Flat Cable II

The communications power to Slave Units is supplied through a Round Cable II, Flat Cable I or Flat Cable II cable. Therefore there is no need to provide a communications power supply for Slave Units separately. The communications power supply can be shared by all Slave Units within the same trunk line or sub-trunk line. The I/O power must be supplied separately to the Slave Units which need I/O power, i.e., Slave Units with a multi-power supply.

### Without Repeater Units

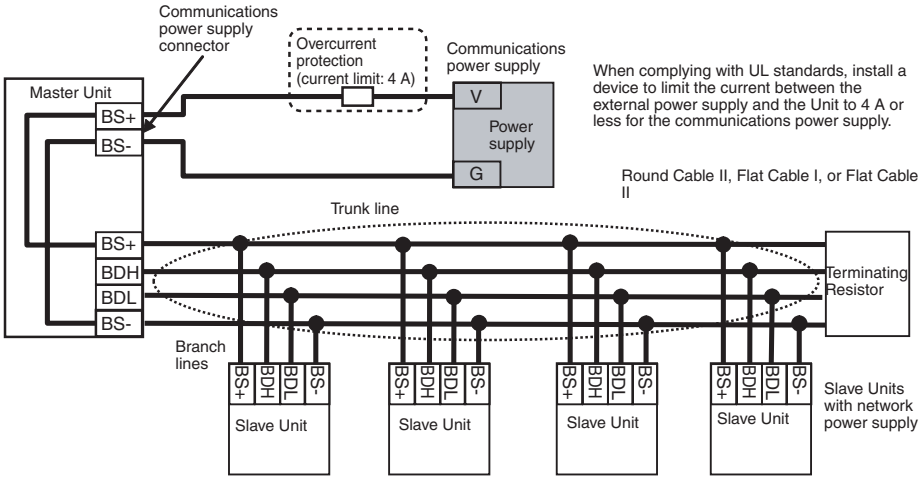

### With Repeater Units

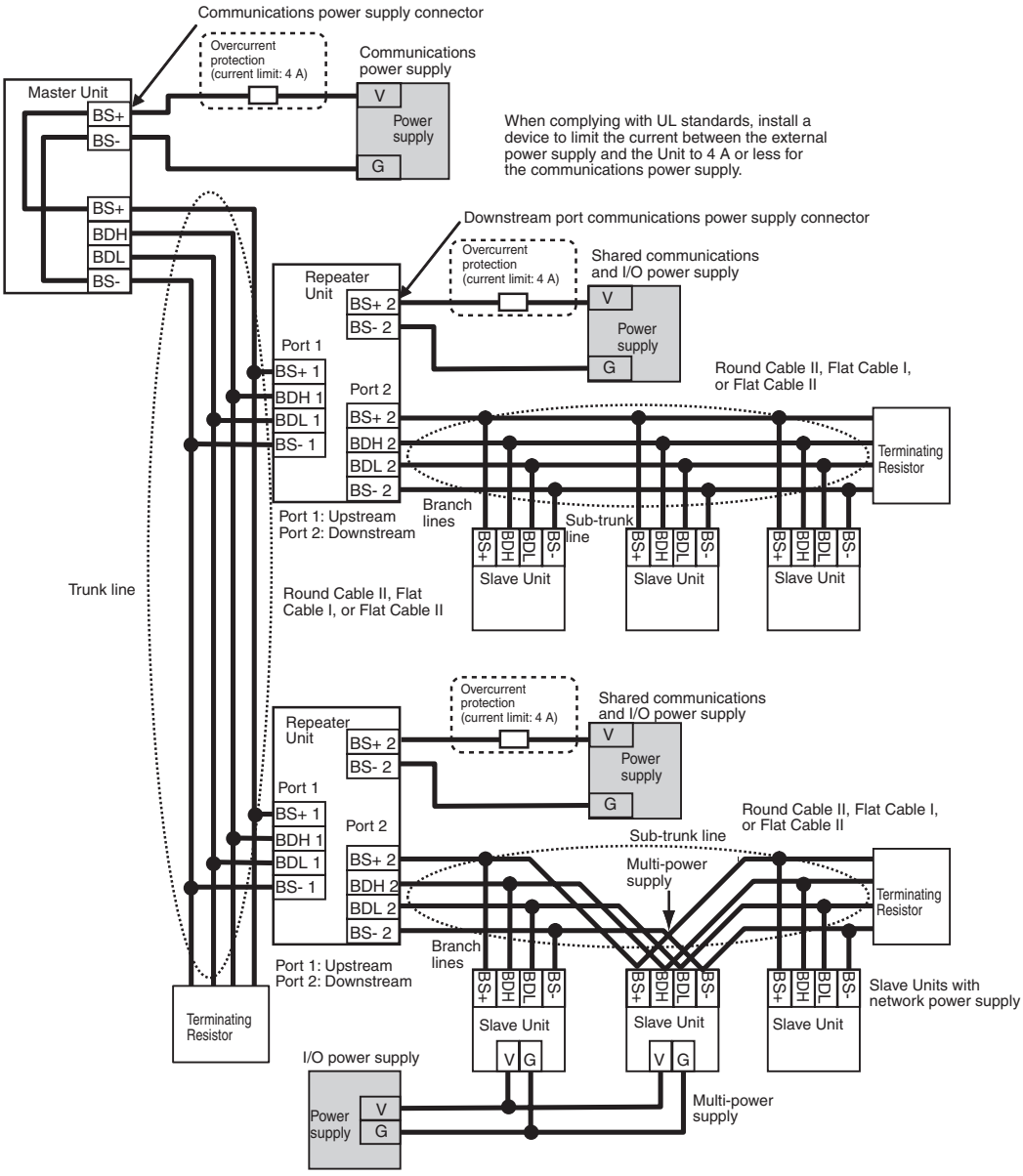


**Note**

(1) Do not supply communications power from more than one location for the trunk line or for any one sub-trunk line. The quality of communications may decrease and normal communications may not be possible.

(2) Do not supply communications power from a single power supply to the trunk line and a sub-trunk line or to two sub-trunk lines. Also do not use a single communications power supply for two or more CompoNet networks. The quality of communications may decrease and normal remote I/O communications may not be possible.

(3) The I/O power supply to multi-power supply Slave Units may be a source of noise depending on the connected devices. Even when supplying the communications power supply together to all Slave Units, use a separate I/O power supply so that noise does not affect the network.

**Restrictions**

The following restrictions apply when supplying communications power through a Round Cable II, Flat Cable I, or Flat Cable II cable.

- The communications power supply can be connected at only one location for the trunk line and one location each for the sub-trunk lines.
- Communications power to the trunk line can be supplied only through the communications power supply connector on the Master Unit. Communications power to a sub-trunk line can be supplied only through the downstream port of communications power supply connector on the Repeater Unit. Communications power cannot be supplied at any other locations.

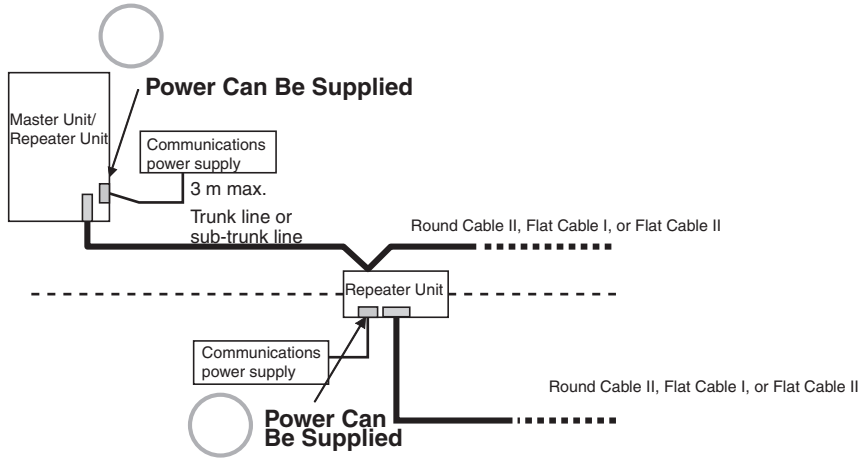


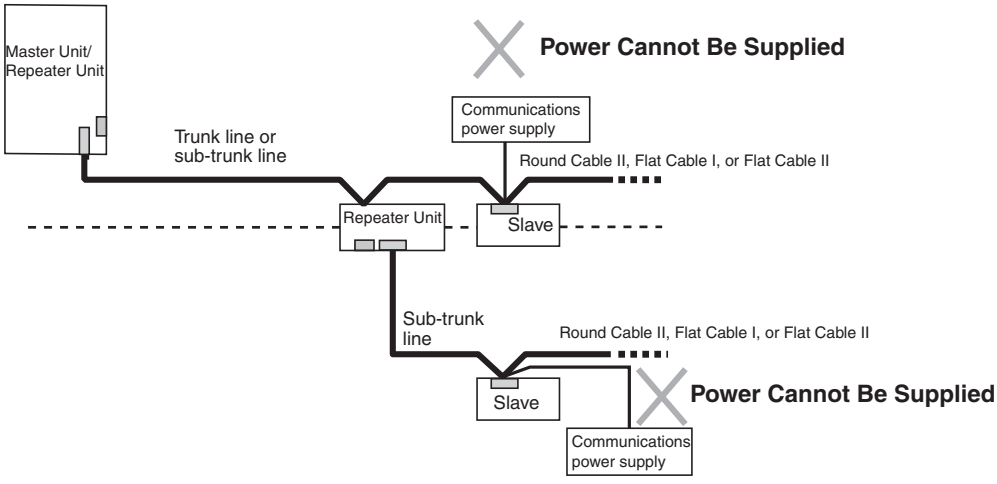


- Use separate power supplies each for the Master Unit trunk line and for the upstream and downstream trunk lines from a Repeater Unit.

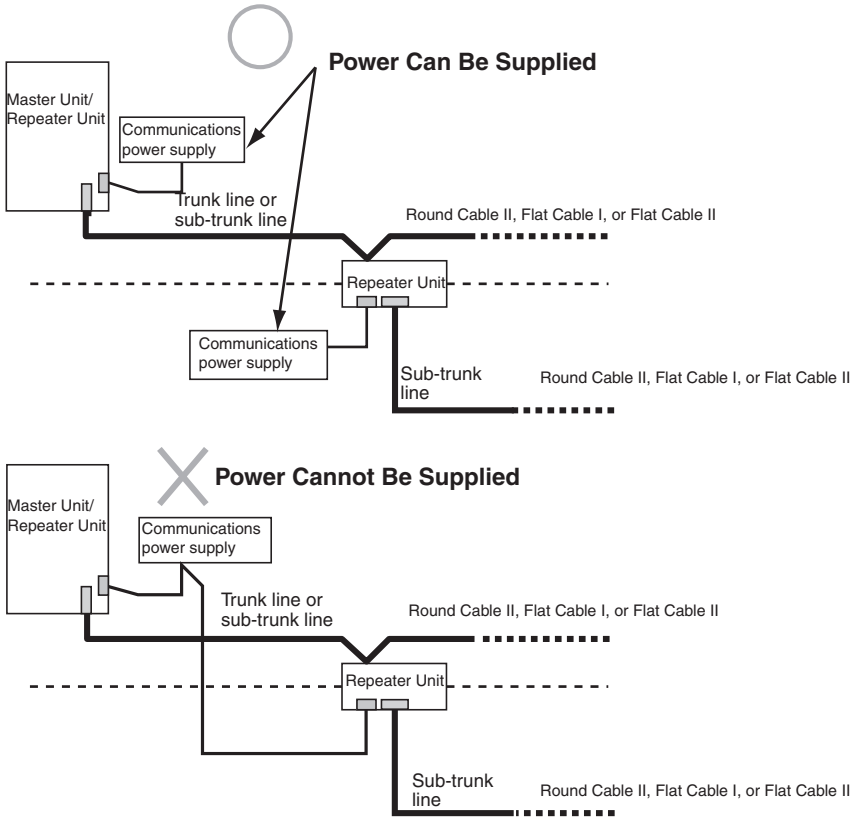


Otherwise, transmission may deteriorate and communications errors may occur.

## Using Round Cable I with Round Cable II, Flat Cable I, or Flat Cable II

In a CompoNet network, Round Cable I cables can be installed under the same Master Unit as Round Cables II, Flat Cable I, or Flat Cable II cables as long as they are separated by a Repeater Unit.

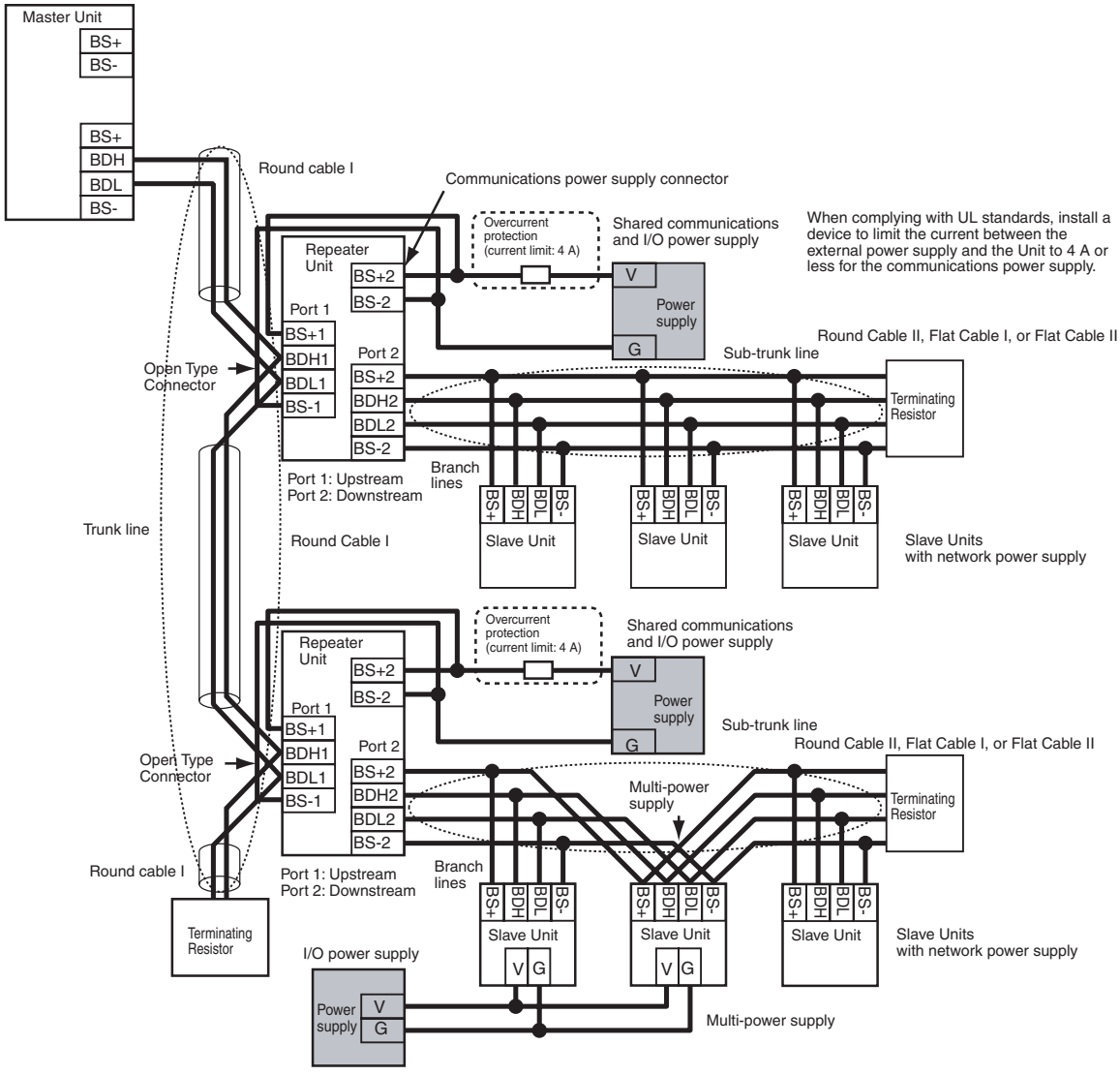


**Note** Depending on the I/O device to which it is connected, an I/O power supply connected to a multi-power supply Slave Unit may be a source of noise. Even when the communications power is supplied collectively to all Slave Units, a separate I/O power supply must be provided so that noise does not affect the network.

## 4-4-5 Precaution in Supplying Power to Slave Units

When supplying communications power and I/O power, the allowable currents of cables and connections, the voltage drop, and the capacity and location of power supplies must be considered.

### Allowable Current Restrictions

Do not allow the total current consumption of all Slave Units to exceed the allowable current of the communications cables and connectors.

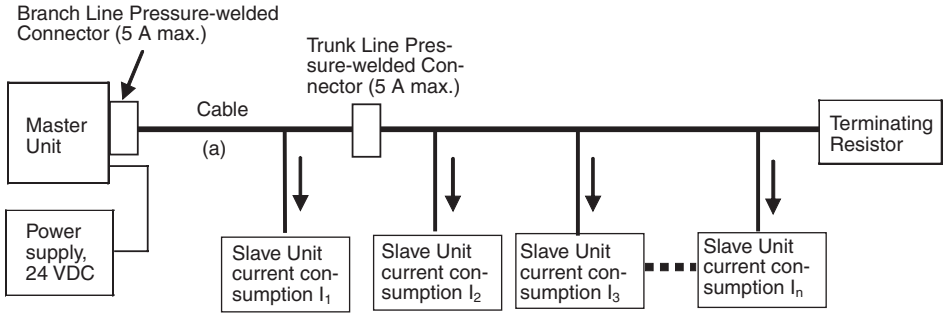


**Allowable Currents for Cables**

Select the communications cable so that the total current consumption of all Slave Units does not exceed the allowable current of the cable.

Cable allowable current $\geq I_1 + I_2 + I_3 + \cdots I_n$
(For the allowable cable current for "a" in the above diagram)

**Allowable Currents for Connectors**

There are limits to the allowable current for the communications power supply connectors on the Master Unit and Repeater Units, Flat Connector Sockets, and Flat Connector Plugs. Do not allow the current flow where these connectors are used to exceed the allowable current.

| Name | Model | Allowable current | Remarks |
|---|---|---|---|
| Communications power supply connectors on CS/CJ-Master Units | CS1W-CRM21 | 5 A (UL rating: 4A) | Round Cable I, Round Cable II, Flat Cable I, or Flat Cable II |
| | CJ1W-CRM21 | | |
| Communications power supply connector on Repeater Unit | CRS1-RPT01 | | |
| Flat Connector Socket | DCN4-TR4 | | |
| | DCN5-TR4 | | |
| Flat Connector Plug | DCN4-BR4 | | |
| | DCN5-BR4 | | |
| Multi-wiring Connector | DCN4-MD4 | | |

**Note** If the allowable current is exceeded, heating and burning may result.

## Voltage Drop

**Cable Voltage Drop**

The voltage drop must be considered so that the power supply voltage at the Slave Unit that is the farthest from the power supply will still be within the allowable power supply range.

The voltage drop is expressed by the following formula.

Voltage drop (V) = Current (A) × Cable conductor resistance (Ω/m) × Cable length (m) × 2

If the voltage drop is too large and power cannot be supplied to the farthest Slave Unit within the allowable range, add a Repeater Unit and supply power from the Repeater Unit.

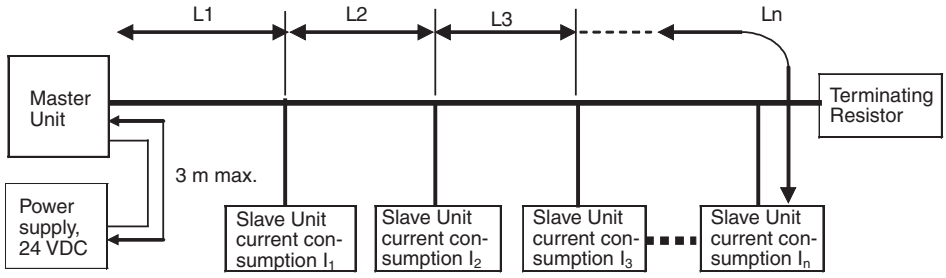


■ **Calculation Example**

The allowable power supply voltage range for Slave Units is 14 to 26.4 VDC. If a 24-VDC power supply is used, the allowable voltage drop is 10 V.

The relationship between the cable and the length that can be extended is expressed by the following formula:

$$10\ (V) \geq \{(I_1 + I_2 + I_3 + \ldots + I_n) \times R_1 \times L_1 \times 2\} + \{(I_2 + I_3 + \ldots + In) \times R_2 \times L_2 \times 2\} + \{(I_3 + \ldots + I_n) \times R_3 \times L_3 \times 2\} + \ldots + \{I_n \times R_n \times L_n \times 2\}$$

To provide leeway when selecting the cable, use the following approximation.

$$10(V) \geq \{(I1 + I2 + I3 + \ldots + In) \times R \times L \times 2\}$$

R = Cable conductor resistance = 0.025 W/m for Flat Cable

The extended length of the cable is thus expressed by the following formula:

$$L\ (m) \leq 200 \div (I1 + I2 + I3 + \ldots + In) \ldots \text{For Flat Cable}$$

## 4-4-6 Precautions on Locating the I/O Power Supply

When building a system, the supply methods for communications power and I/O power must be considered. Not only hardware, such as selecting the power supplies and cables based on allowable currents and voltage drop, be considered, but also system operation for power supply errors, costs, and other software issues must be considered when studying power supply methods.

### Supplying I/O Power from One Source

When supplying I/O power to the entire system from one source, the power consumed by each devices and the loads must be considered. Select the cables so that the power supply voltage for the last Slave Unit and load will be within the allowable range.

Also, give proper consideration to the power supply capacity and be sure the total line current is within the allowable current range of the cable.

The following measures can be considered to keep the voltage drop within the allowable range when supplying power from one power supply.

- Increase the thickness of the cables.
- Increase the output voltage of the power supply.
- Shorting the wiring.
- Locate the power supply in the middle of the network.

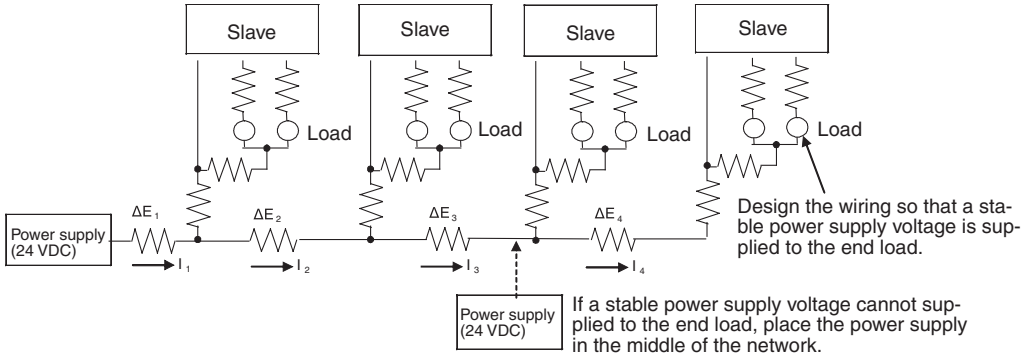


**Supplying I/O Power from Multiple Sources**

Supplying I/O power from multiple power supplies instead of from one power supply enables reducing the line current, reducing the voltage drop, and decreasing the size of the cable. Using multiple power supplies should also be considered to increase system safety when power supply errors occur.

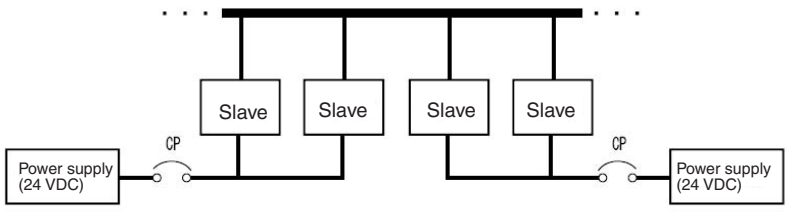


## 4-4-7 Other Precautions

**Power Supply Errors**

The location of power supplies and the grouping of Slave Units should be considered based on whether the overall system is to be stopped when a power supply error occurs.

If it is necessary to prevent the overall system from stopping to ensure system safety, consider placing power supplies in more than one location and consider the way Slave Units should be grouped when supplying power.

**Cost Considerations**

Also consider the power supply methods from the point of view of the total cost, including the following items:

The capacity and number of power supplies, Cable thickness (allowable current) and length (voltage drop),

System safety, and

Wiring work.

# SECTION 5
# Remote I/O Communications

This section describes the remote I/O communications that are possible with CompoNet Networks.


5-1 Exchanging Data with the CPU Unit . . . . . 102
5-1-1 Basic Communications Operations. . . . . 102
5-1-2 Start and Stop Conditions for Remote I/O Communications . . . . . 102
5-1-3 Communications Errors . . . . . 102
5-1-4 Addresses Allocated to Slave Units . . . . . 103
5-1-5 Slave Unit Normal Confirmation . . . . . 105
5-2 Allocations to Slave Units. . . . . 111
5-2-1 Overview. . . . . 111
5-2-2 I/O Memory Area Allocations by Communications Mode Number 111
5-2-3 Types of Node Addresses in CompoNet Networks . . . . . 117
5-2-4 Details of Slave Unit Allocation in I/O Memory . . . . . 119
5-2-5 Status Area Allocation . . . . . 129
5-3 Remote I/O Communications Performance . . . . . 139
5-3-1 I/O Response Time . . . . . 139
5-3-2 Effects of Master Units on CPU Unit Cycle Time . . . . . 148

# 5-1 Exchanging Data with the CPU Unit

## 5-1-1 Basic Communications Operations

Communications for sharing data can be continuously performed between the CPU Unit and Slave Units. This is called “remote I/O communications.”

- Communications are started just by connecting the communications wiring and turning ON the power (the communications power supply to the Slave Unit and the power supply to the PLC), allowing data to be shared between the I/O Memory Areas of the CPU Unit and the Slave Unit.
- The ladder program is used to read and write the areas where data is shared (i.e., the areas allocated to Slave Units). When reading and writing shared data, use the normal operation of the Slave Unit as a condition for the read/write operation.

## 5-1-2 Start and Stop Conditions for Remote I/O Communications

- Remote I/O communications start when power is turned ON to the PLC and the Slave Unit communications power is turned ON. When the Registered Slave Unit Participation Standby Mode is enabled, however, remote I/O communications will not start until all registered Slave Units are participating.
- Remote I/O communications can also be started using a FINS command.
- If the I/O Communications Manual Startup Mode is set on the CX-Integrator, the remote I/O communications will remain stopped even after the power is turned ON. Remote I/O communications will not start until the Remote I/O Communications Start Switch is turned ON in memory.
- In Communications Error Communications Stop Mode, all remote I/O communications will be stopped if a communications error occurs in any Slave Unit. When that happens, the Communications Error Communications Stop Flag (status bit 02) turns ON. The ESTP (Communications Error Communications Stop Mode) DIP switch pin on the front of the CompoNet Master Unit must be turned ON.

**Note** Communications will not stop for verification errors for registration tables or duplicated Slave Unit address settings.

## 5-1-3 Communications Errors

A communications error exists when a Slave Unit cannot return a normal response to a communications request from a Master Unit. The following are the main causes of communications errors:

- There is a malfunction at the Slave Unit itself.
- There is a disconnection in a communications cable to the Slave Unit.
- The communications power supply is OFF.
- The affected Slave Unit cannot receive correct data because of noise.

When a communication error occurs at a Slave Unit, the NS indicator on the front of the Master Unit will light and *d9* will be displayed on the seven-segment display. At the same time, the relevant Communications Error Flag (status bit 00) will turn ON.

### Remote I/O Communications Operation When a Communications Error Occurs

If ESTP (Communications Error Communications Stop Mode) is turned ON on the DIP switch on the front of the Master Unit, all remote I/O communications will stop when an communications error occurs at any Slave Unit. (The Communications Error Communications Stop Flag at status bit 02 also will turn ON.) If ESTP is set to OFF, remote I/O communications continue.

When the cause of the communications error is removed, the Slave Unit is automatically restored in the network. There is no need to restart or to cycle the power to the Master Unit.

### Communications Error Input Data Zero Clear Mode

Input Data Zero Clear Mode can be set from the CX-Integrator for communications errors. If a communications error occurs for a Slave Unit in this mode, all input data for that Slave Unit is cleared to zeros. If Input Data Zero Clear Mode is not set, then the input data is held for the Slave Unit even if a communications error occurs. This can be used, for example, to suppress triggering operations when communications errors have occurred in systems where ON input data signals are used as triggers for operation.

## 5-1-4 Addresses Allocated to Slave Units

- Each Slave Unit is allocated memory in the Special I/O Unit area of the CIO Area (CIO 2000 to CIO 2959) in the CPU Unit, in order of node address (fixed) and from the following beginning address. (See note.)

  Beginning address: CIO 2000 + (10 x unit number)

  (The “unit number” is the number by which the CPU Unit identifies Special I/O Units (from 0 to 95). It is set on the rotary switch on the front of the Master Unit.)

  **Note** When the communications mode number is set to 8 (software setting), the first address can be set to any address in the CPU Unit's CIO, WR, HR, or DM Area). (The number of allocated nodes can also be specified.) Even in this case, however, the node address order is fixed.

- The area after the Output Area (the area allocated to Output Slave Units) is the Input Area (the area allocated to Input Slave Units). Within each of these areas, the allocated addresses are determined in ascending order of node addresses.

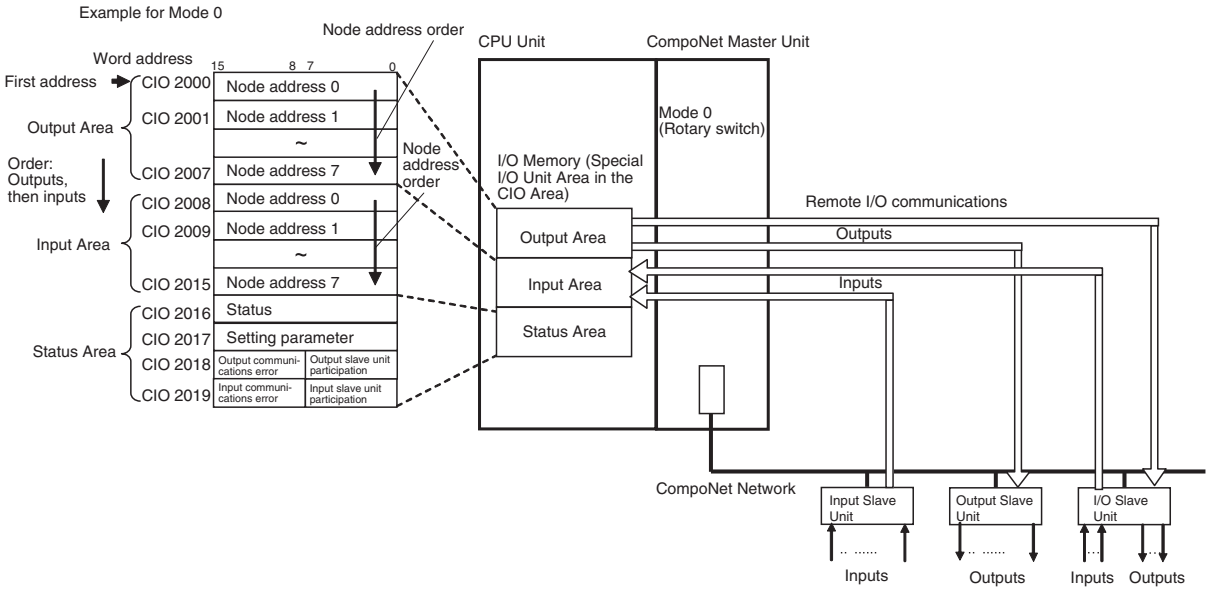


- The Input Area is allocated to Input Slave Units, the Output Area is allocated to Output Slave Units, and both the Input Area and the Output Area are allocated to Mixed I/O Slave Units.

  The 16 Slave Unit inputs for node address N are allocated in one word (bits 00 to 15) at node address N in the Input Area.

  The 16 Slave Unit outputs for node address N are allocated in one word (bits 00 to 15) at node address N in the Output Area.

  The 16 Slave Unit inputs and 16 Slave Unit outputs for node address N are allocated in one word (bits 00 to 15) plus one word (bits 00 to 15) at node address N in the Input Area and node address N in the Output Area.

Allocation Example

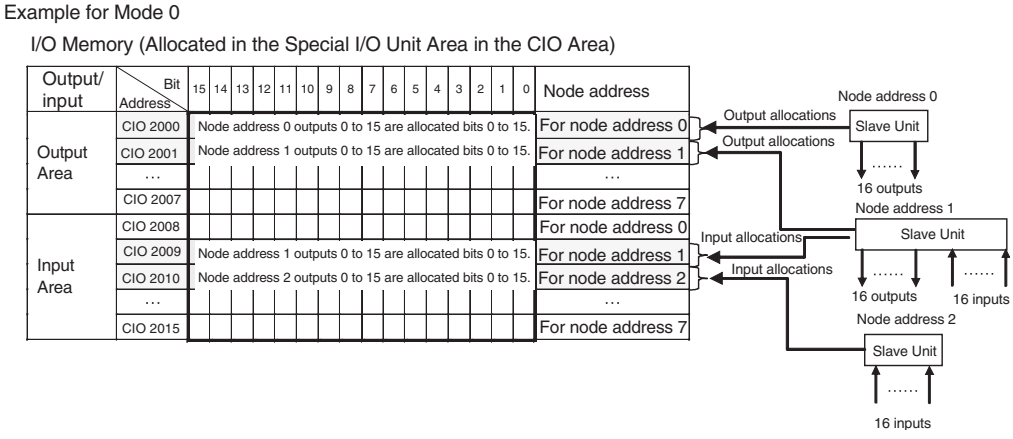


- For node requiring only 8 inputs or 8 outputs, the node is allocated the rightmost byte of the respective word (bits 00 to 07). The leftmost byte (bits 08 to 15) is not used.
- If there are more than 16 Slave Unit inputs or outputs, both the node address and the next node address (+1) are allocated.

  If 16 Slave Unit inputs at node address N are expanded by 8 inputs to make a total of 24 inputs, then Input Area node address N and node address N+1 are allocated.

**Note** If there are no Slave Unit inputs for node address N+1, there will be no node address duplication error for node address N+1. If there are Slave Unit inputs for node address N+1, a node address duplication error will occur.

If 16 Slave Unit outputs at node address N are expanded by 8 outputs to make a total of 24 outputs, then Output Area node address N and node address N+1 are allocated.

**Note** If there are no Slave Unit outputs for node address N+1, there will be no node address duplication error for that N+1. If there are Slave Unit outputs for node address N+1, a node address duplication error will occur.

Allocation Example

Example for Mode 0

I/O Memory (Allocated in the Special I/O Unit Area in the CIO Area)

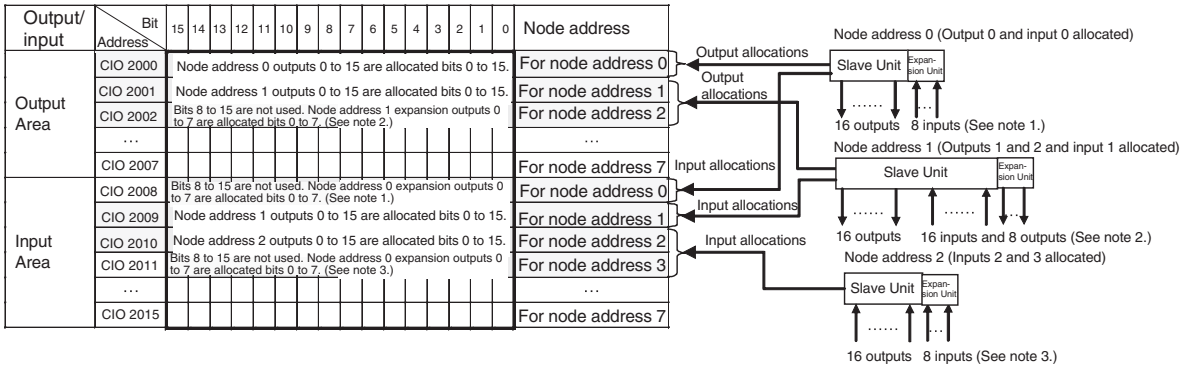


**Note** (1) The 8 expansion inputs for node address 0 are allocated bits 00 to 07 of CIO 2008 for node address 0. (Bits 08 to 15 are not used.)

(2) The 8 expansion outputs for node address 1 are allocated bits 00 to 07 of CIO 2002 for node address 2, following node address 1. (Bits 08 to 15 of CIO 2002 are not used.)

(3) The 8 expansion inputs for node address 2 are allocated bits 00 to 07 of CIO 2011 for node address 3, following node address 2. (Bits 08 to 15 of word 2011 are not used.)

## 5-1-5 Slave Unit Normal Confirmation

### Participation and Communications Error Flags

- Participation Flags and Communications Error Flags in the Status Area are used to indicate whether Slave Units are participating normally in the network.
  - Participation Flags
    A Participation Flag turns ON once the corresponding Slave Unit starts participating in the network when the System is started (i.e., when the power is turned ON). It remains ON even if the Slave Unit stops participating due to a communications error.

- Communications Error Flags
  A Communications Error Flag turns ON if the applicable Slave Unit cannot communicate with the Master Unit for any reason after the Slave Unit has joined the network (i.e., if the Participation Flag is ON). It turns OFF when the error is removed.

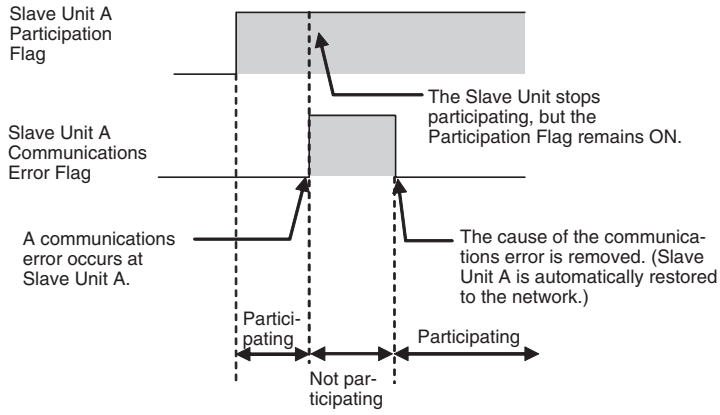


Therefore, in the ladder program, the applicable Slave Unit has stopped participating when both the Participation Flag and the Communications Error Flag are ON. Similarly, the applicable Slave Unit is operating normally when the Participation Flag is ON and the Communications Error Flag is OFF.

Example: This example shows the executing I/O with the applicable Slave Unit when the Participation Flag and Communications Error Flag are combined and taken as a condition to confirm that operation is normal.

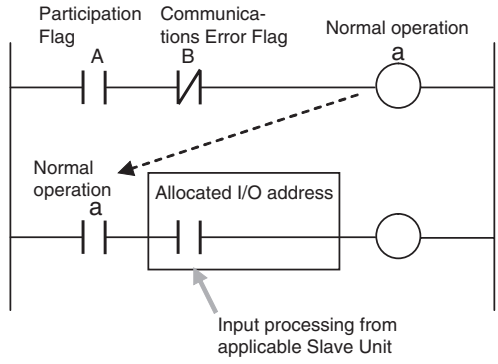


- The operation of the Participation Flags and Communications Error Flags depends on the status of SW4 (REGS) on the DIP switch on the front of the Master Unit.

| SW (REGS) of DIP switch on front of Master Unit | Object of Participation or Communications Error Flag |
|---|---|
| OFF (Registration Table Disabled) | All Slave Units |
| ON (Registration Table enabled) | Registered Slave Units only. Participation Flags and Communications Error Flags for unregistered Slave Units do not operate. |

- A bit is allocated for each node address. The 8 input nodes are allocated after the 8 output nodes.

  **Note** When there are both inputs and outputs (i.e., for I/O Slaves), flags are allocated only for the input node.

- Participation Flags are allocated the rightmost byte (bits 00 to 07). Inputs are allocated after outputs.
- Communications Error Flags are allocated the leftmost byte (bits 08 to 15).

Example for Mode 0

I/O Memory (Allocated in the Special I/O Unit Area in the CIO Area)

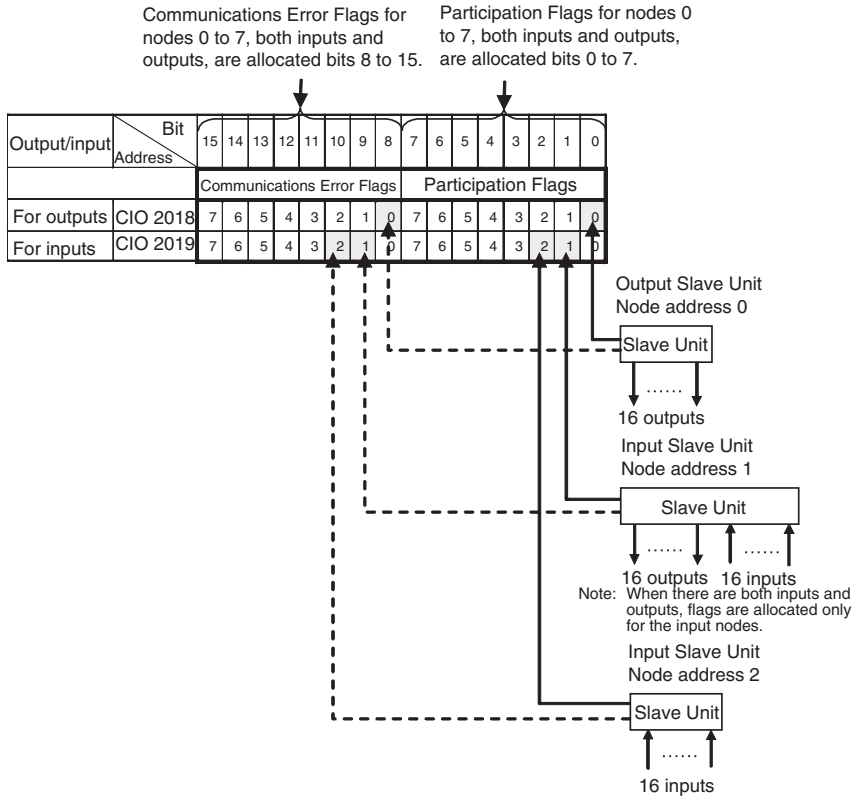


## Registration Tables

**Overview**

Registration Tables are used to register Slave Units that are intended to participate at particular node addresses (along with the models corresponding to the node addresses) to enable verifying that they actually are participating. At the same time, they prevent unregistered Slave Units and Slave Units of the wrong models from participating in the network.

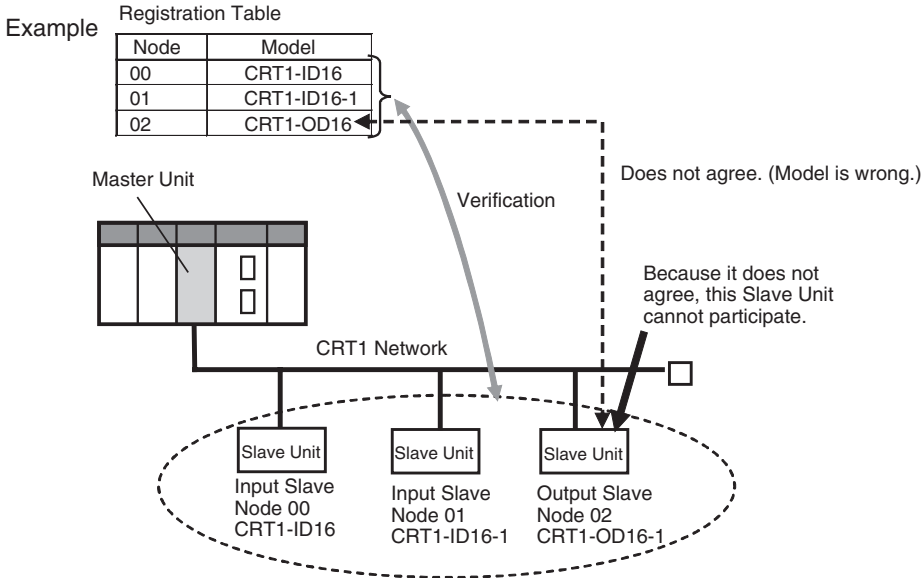


This function is enabled only in Registration Table Enable Mode, i.e., when SW4 (REGS) is turned ON on the Master Unit when the power is turned ON and the Registration Table data is normal). It can be used with any communications mode number.

If a Slave Unit is found to be not in agreement during the verification, the Registration Table Verification Error Flag (status bit 01) will turn ON. Remote I/O communications will still start, if the Registered Slave Unit Participation Standby Mode is disabled. If the Registered Slave Unit Participation Standby Mode is enabled, remote I/O communications will not start.

**Operation**

The operation for each case is as follows:

- If all registered Slave Units are participating within the Registered Slave Unit Participation Monitoring Time after the power is turned ON or after the Remote I/O Communications Startup Switch is turned ON in the I/O Communications Manual Startup Mode, the All Registered Slave Units Participating Flag (status bit 06) will turn ON. (The default monitoring time is 10 s for any baud rate other than 93.75 kbps, and 30 s for 93.75 kbps. Also see note 1.)
  - If no unregistered Slave Units are participating, the Registration Table Verification Error Flag will turn OFF.
  - If any unregistered Slave Unit is participating, a verification error (unregistered Slave Unit) will occur and the Registration Table Verification Error Flag will turn ON. At the same time, the NS indicator on the front of the Master Unit will flash red and the seven-segment display will show *d6*.
- If all registered Slave Units are not participating within the Registered Slave Unit Participation Monitoring Time after the power is turned ON (or after the Remote I/O Communications Start Switch is turned ON when the Remote I/O Communications Manual Start Mode is enabled), a verification error (non-existent Slave Unit) will occur and the Registration Table Verification Error Flag will turn ON. (The default monitoring time is 10 s for any baud rate other than 93.75 kbit/s, and 30 s for 93.75 kbit/s. Also see note 1.) At the same time, the NS indicator on the front of the Master Unit will flash red and the seven-segment display will show *d5*. If the applicable Slave Unit subsequently starts participating, the Registration Table Verification Error Flag will turn OFF and the error display will be cleared.

**Note** (a) The Registered Slave Participation Monitoring Time is disabled when the Registered Slave Participation Standby Mode is enabled.

(b) Remote I/O communications will not operate if SW4 (REGS) is ON on the Master Unit when the power is turned ON and the Registration Table data is not valid. The MS indicator on the front of the Master Unit will flash red, and the seven-segment display will show *E8*.

**Creating Registration Tables**

Registration Tables are created either by automatic generation from the CX-Integrator or by editing and transferring them.

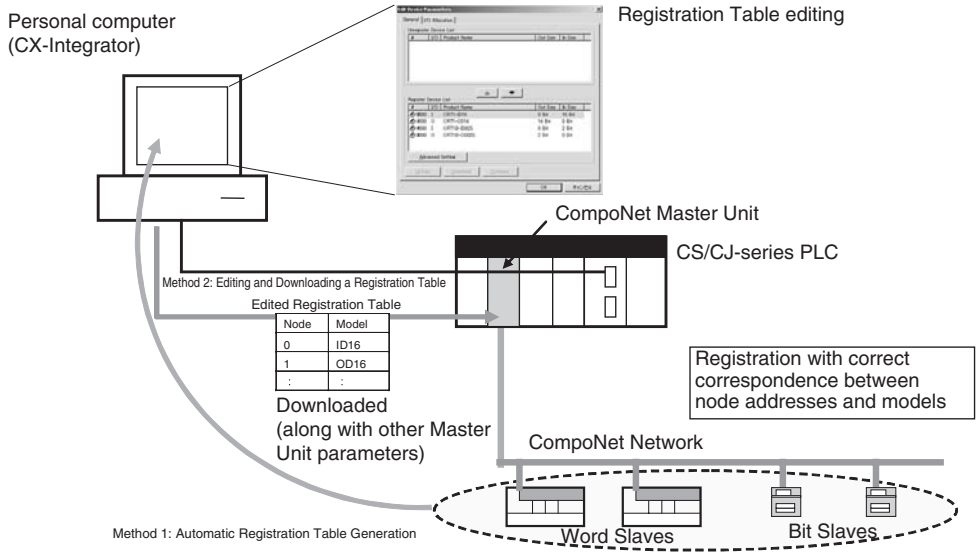


The Registration Table is then enabled by turning ON the power with SW4 (REGS) on the Master Unit turned ON. (The Registration Table is read when the power is turned ON.) The Registration Table Mode Flag (status bit 10) will turn ON (Registration Table Enable Mode).

**1) Editing and Transferring the Registration Tables**

Edit the Registration Table in the Master Parameter Editing Window of the CX-Integrator. The table shows the correspondence between the node addresses and the Slave Unit types. Download the Table to the CompoNet Master Unit.

**Note** Registration Tables that are either generated automatically from the CX-Integrator or edited and downloaded are stored in EEPROM in the CompoNet Master Unit. Therefore the Registration Table data in the CompoNet Master Unit is saved even if the PLC power is turned OFF or if the Master Unit is mounted to another PLC.

**Registered Slave Participation Monitoring Time**

The Registered Slave Participation Monitoring Time is the time from when the power is turned ON or after the Remote I/O Communications Startup Switch is turned ON in the I/O Communications Manual Startup Mode, until the participation of all registered Slave Units has been detected. The Registered Slave Participation Monitoring Time can be set to a time other than the default (10 s for any baud rate other than 93.75 kbit/s, and 30 s for 93.75 kbit/s).

Using the CX-Integrator, set the Registered Slave Participation Monitoring Time (1 to 600 s; default: 10 s at baud rate of other than 93.75 kbit/s and 30 s at baud rate of 93.75 kbit/s) under *Detailed Settings* in the Master General Tab Page, and then downloading the parameters to the CompoNet Master Unit. This setting is disabled when the Registered Slave Participation Standby Mode is enabled.

**Registered Slave Participation Standby Mode**

Registered Slave Participation Standby Mode can be used to not start remote I/O communications until all registered Slave Units are participating in the network (i.e., while the All Registered Slaves Participating Flag is OFF). Remote I/O communications will start when the All Registered Slaves Participating Flag turns ON. Using this mode will make it faster for all Slave Units to participate in the network.

Remote I/O communications will not start, however, unless all registered Slave Units are participating.

When this mode is used, Registered Slave Unit Participation Monitoring Time setting (including the default value of 10 s) is disabled.

On the CX-Integrator, go to the Detailed Settings on the Master General Tab Page, and enable the Registered Slave Participation Standby Mode. Download the parameters to the CompoNet Master Unit.

This function is enabled only in Registration Table Enable Mode, i.e., when SW4 (REGS) is turned ON on the Master Unit when the power is turned ON, and the Registration Table data is normal. It can be used with any communications mode number.

## Slave Unit Address Duplication Error

In any of the following cases, a Slave Unit address duplication error will occur and the Address Duplication Error Flag (status bit 03) will turn ON for the Slave Unit that joined the network later. The NS indicator on the front of the Master Unit will flash red and the seven-segment display will show d0. Remote I/O communications will stop.

- There is already a Slave Unit for which the same node address is set.
  (For example, both Slave Units are set for node address N.)

  **Note** An address duplication error will occur if the same node address is set for two Slave Units in the same allocation area. This applies only if both are Input Slave Units or both are Output Slave Units.

- Different node addresses are set, but the allocated memory areas overlap.
  (For example, a Slave Unit set for node address 0 has 24 inputs and a Slave Unit set for node address 1 has 16 inputs, in which case both Slave Units will be set to use the Input 1 Area.)

  **Note** As long as the allocated areas themselves are not duplicated between nodes, Slave Units set for different node addresses can be allocated the Input Area and Output Area at the same node address area. (For example, a Slave Unit set for node address 1 can be allocated 16 outputs in the Output 1 Area, while an Expansion Slave Unit set for node address 0 can be allocated 16 inputs in the Input 1 Area.)

- A Slave Unit was removed and then a Slave Unit of a different class started participating at the same node address.

## Illegal Configuration Error

If the permitted number of Repeater Unit segments is exceeded, the NS indicator on the front of the Master Unit will flash red and the seven-segment display will show *E5*.

# 5-2 Allocations to Slave Units

This section describes how Slave Unit I/O is allocated in the I/O Memory of the CPU Unit under which the CompoNet Master Unit is mounted.

## 5-2-1 Overview

Portions of the Special I/O Unit Area or an area set using the CX-Integrator in the CPU Unit under which the Master Unit is mounted are allocated to Slave Unit I/O information and status information.

The words that are allocated are determined by the unit number of the Master Unit as a Special I/O Unit and the communications mode number (or according to software settings made using the CX-Integrator when communications mode 8 is set), and the bits used by each Slave Unit are determined by the node address set for the Slave Units and by the number of points used by the Slave Units.

## 5-2-2 I/O Memory Area Allocations by Communications Mode Number

Set the communications mode number according to the number of Slave Units connected (Word and Bit Slave Units) and the number of control points. Set 0 to 3 or 8 on the rotary switch on the front of the CompoNet Master Unit.

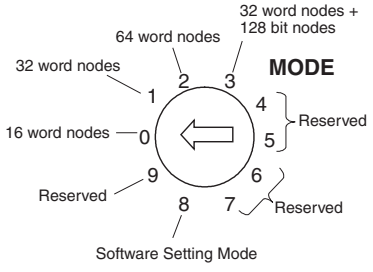

## Number of Connectable Slave Unit Nodes and Control Points per Master Unit, and Memory Area Size for Each Mode

| Communications mode | Mode name | Allowable Slave Unit node addresses per Master Unit | Control points per Master Unit | Unit numbers per Master Unit | Allocated area | Words allocated in I/O Memory | | | | |
|---|---|---|---|---|---|---|---|---|---|---|
| | | | | | | Output Area | Input Area | Status | Parameter settings | Participation Flags and Communications Error Flags |
| 0 | Communications mode 0 | Word Slave Units: 8 input and 8 output node addresses | Word Slave Units: 128 inputs and 128 outputs | 2 | Special I/O Unit Area | Word Slave Units: 8 words | Word Slave Units: 8 words | 1 word | 1 word | Word Slave Units: 2 words |
| 1 | Communications mode 1 | Word Slave Units: 16 input and 16 output node addresses | Word Slave Units: 256 inputs and 256 outputs | 4 | | Word Slave Units: 16 words | Word Slave Units: 16 words | 1 word | 1 word | Word Slave Units: 4 words |
| 2 | Communications mode 2 | Word Slave Units: 32 input and 32 output node addresses | Word Slave Units: 512 inputs and 512 outputs | 8 | | Word Slave Units: 32 words | Word Slave Units: 32 words | 1 word | 1 word | Word Slave Units: 8 words |
| 3 | Communications mode 3 | Word Slave Units: 16 input and 16 output node addresses Bit Slave Units: 64 input and 64 output node addresses | Word Slave Units: 256 inputs and 256 outputs Bit Slave Units: 128 inputs and 128 outputs | 8 | | Word Slave Units: 16 words + Bit Slave Units: 8 words | Word Slave Units: 16 words + Bit Slave Units: 8 words | 1 word | 1 word | Word Slave Units: 4 words + Bit Slave Units: 16 words |
| 8 | Software Setting Mode | Word Slave Units: 64 input and 64 output node addresses Bit Slave Units: 128 input and 128 output node addresses | Word Slave Units: 1,024 inputs and 1,024 outputs Bit Slave Units: 256 inputs and 256 outputs | 1 | The first address can be set for Word Slave Unit outputs, Word Slave Unit inputs, Bit Slave Unit outputs, and Bit Slave Unit inputs. (Can be allocated in the CIO, WR, HR, or DM Area using a software setting from the CX-Integrator.) | Word Slave Units: 64 words + Bit Slave Units: 16 words max. (Software setting from the CX-Integrator.) | Word Slave Units: 64 words + Bit Slave Units: 16 words max. (Software setting from the CX-Integrator.) | 1 word | 1 word | Word Slave Units: 16 bits +Bit Slave Units: 32 bits |

**Note** The two words for status and parameter settings are allocated in the Special I/O Unit Area.

## I/O Memory Size and Allocation Patterns for Each Communications Mode

**Allocation Patterns**

First address: CIO 2000 + (10 x Unit No.)

| Communications mode number | Pattern | |
|---|---|---|
| 0 | Special I/O Unit Area | |
| | Words +0 to +7 | Output data (8 words)<br>Word Slave Unit outputs 0 to 7 |
| | Words +8 to +15 | Input data (8 words)<br>Word Slave Unit inputs 0 to 7 |
| | Word +16 | Status (1 word) |
| | Word +17 | Parameter settings (1 word) |
| | Words +18 +19 | Participation Flags and Communications Error Flags (2 words) |

| Communications mode number | Pattern | |
|---|---|---|
| 1 | Special I/O Unit Area | |
| | Words +0 to +15 | Output data (16 words)<br>Word Slave Unit outputs 0 to 15 |
| | Words +16 to +31 | Input data (16 words)<br>Word Slave Unit inputs 0 to 15 |
| | Word +32 | Status (1 word) |
| | Word +33 | Parameter settings (1 word) |
| | Words +34 to +37 | Participation Flags and Communications Error Flags (4 words) |
| | Words +38 +39 | Not used (2 words) |
| 2 | Special I/O Unit Area | |
| | Words +0 to +31 | Output data (32 words)<br>Word Slave Unit outputs 0 to 31 |
| | Words +32 to +63 | Input data (32 words)<br>Word Slave Unit inputs 0 to 31 |
| | Word +64 | Status (1 word) |
| | Word +65 | Parameter settings (1 word) |
| | Words +66 to +73 | Participation Flags and Communications Error Flags (8 words) |
| | Words +74 to +79 | Not used (6 words) |

| Communications mode number | Pattern | |
|---|---|---|
| 3 | Special I/O Unit Area | |
| | Words +0 to +15 | Output data (16 words)<br>Word Slave Unit outputs 0 to 15 |
| | Words +16 to +31 | Input data (16 words)<br>Word Slave Unit inputs 0 to 15 |
| | Words +32 to +39 | Bit output data (8 words)<br>Bit Slave Unit outputs: 0 to 63 |
| | Words +40 to +47 | Bit input data (8 words)<br>Bit Slave Unit inputs: 0 to 63 |
| | Word +48 | Status (1 word) |
| | Word +49 | Parameter settings (1 word) |
| | Words +50 to +53 | Participation Flags and Communications Error Flags (4 words) |
| | Words +54 to +69 | Bit Slave Participation Flags and Communications Error Flags (16 words) |
| | Words +70 to +79 | Not used (10 words) |

| Communications mode number | Pattern |
|---|---|
| 8 | The first addresses for Word Slave input and output data, Bit Slave bit input and output data, and status data (status, settings, participation, and disconnection) are set using software settings (areas and addresses) from the CX-Integrator. The sizes allocated are also set using software settings (number of nodes) from the CX-Integrator.<br>**Note** Words are always allocated to Slave Units in ascending order from node address 0. Nothing can be allocated to unused node addresses. If the number of nodes set from the CX-Integrator is n, then Slave Units are allocated from node address 0 to n-1.<br>Words +0 to +63 max. — Output data (64 words max.) Slave Unit outputs: 0 to 63<br>Words +0 to +63 max. — Input data (64 words max.) Slave Unit inputs: 0 to 63<br>Words +0 to +15 max. — Bit output data (16 words max.) Bit Slave Unit outputs: 0 to 127<br>Words +0 to +15 max. — Bit input data (16 words max.) Bit Slave Unit inputs: 0 to 127<br>Words +0 to +15 max. — Participation Flags and Communications Error Flags (16 words)<br>Words +0 to +31 — Bit Slave Participation Flags and Communications Error Flags (32 words)<br>The following items are allocated in the Special I/O Unit Area.<br>+0 — Status (1 word)<br>+1 — Parameter settings (1 word) |

## Unit Number Allocations

**Allocating One Unit Number per Node (Communications Mode 8)**

CIO 2000 + (10 × Unit No.) to CIO 2009 + (10 × unit No.): Unit No. = 0 to 95)

| First allocated word | Unit number setting |
|---|---|
| CIO 2000 | Unit No. 0 |
| CIO 2010 | Unit No. 1 |
| CIO 2020 | Unit No. 2 |
| CIO 2030 | Unit No. 3 |
| CIO 2040 | Unit No. 4 |
| CIO 2050 | Unit No. 5 |
| : | |
| CIO 2940 | Unit No. 94 |
| CIO 2950 | Unit No. 95 |

**Allocating Two Unit Numbers per Node (Communications Mode 0)**

CIO 2000 + (10 × unit No.) to CIO 2019 + (10 × unit No.): Unit No. = 0 to 94

| First allocated word | Unit number setting | |
|---|---|---|
| CIO 2000 | Unit No. 0 | |
| CIO 2010 | | Unit No. 1 |
| CIO 2020 | Unit No. 2 | |
| CIO 2030 | | Unit No. 3 |
| CIO 2040 | Unit No. 4 | |
| CIO 2050 | | Unit No. 5 |
| CIO 2060 | Unit No. 6 | |
| CIO 2070 | | |
| : | | |
| CIO 2920 | Unit No. 92 | |
| CIO 2930 | | Unit No. 93 |
| CIO 2940 | Unit No. 94 | |
| CIO 2950 | | |

**Allocating Four Unit Numbers per Node (Communications Mode 1)**

CIO 2000 + (10 × unit No.) to CIO 2039 + (10 × unit No.): Unit No.= 0 to 92

| First allocated word | Unit number setting | | | |
|---|---|---|---|---|
| CIO 2000 | Unit No. 0 | | | |
| CIO 2010 | | Unit No. 1 | | |
| CIO 2020 | | | Unit No. 2 | |
| CIO 2030 | | | | Unit No. 3 |
| CIO 2040 | Unit No. 4 | | | |
| CIO 2050 | | Unit No. 5 | | |
| CIO 2060 | | | Unit No. 6 | |
| CIO 2070 | | | | Unit No. 7 |
| CIO 2080 | | | | |
| CIO 2090 | | | | |
| CIO 2100 | | | | |
| : | | | | |
| CIO 2890 | Unit No. 89 | | | |
| CIO 2900 | | Unit No. 90 | | |
| CIO 2910 | | | Unit No. 91 | |
| CIO 2920 | | | | Unit No. 92 |
| CIO 2930 | | | | |
| CIO 2940 | | | | |
| CIO 2950 | | | | |

**Allocating Eight Unit Numbers per Node (Communications Modes 2 and 3)**

CIO 2000 + (10 × unit No.) to CIO 2079 + (10 × unit No.): Unit No.= 0 to 88

| First allocated word | Unit number setting | | | | | | | |
|---|---|---|---|---|---|---|---|---|
| CIO 2000 | Unit No. 0 | | | | | | | |
| CIO 2010 | | Unit No. 1 | | | | | | |
| CIO 2020 | | | Unit No. 2 | | | | | |
| CIO 2030 | | | | Unit No. 3 | | | | |
| CIO 2040 | | | | | Unit No. 4 | | | |
| CIO 2050 | | | | | | Unit No. 5 | | |
| CIO 2060 | | | | | | | Unit No. 6 | |
| CIO 2070 | | | | | | | | Unit No. 7 |
| CIO 2080 | Unit No. 8 | | | | | | | |
| CIO 2090 | | Unit No. 9 | | | | | | |
| CIO 2100 | | | Unit No. 10 | | | | | |
| CIO 2110 | | | | Unit No. 11 | | | | |
| CIO 2120 | | | | | Unit No. 12 | | | |
| CIO 2130 | | | | | | Unit No. 13 | | |
| CIO 2140 | | | | | | | Unit No. 14 | |
| CIO 2150 | | | | | | | | Unit No. 15 |
| CIO 2160 | | | | | | | | |
| CIO 2170 | | | | | | | | |
| CIO 2180 | | | | | | | | |
| CIO 2190 | | | | | | | | |
| CIO 2200 | | | | | | | | |
| CIO 2210 | | | | | | | | |
| CIO 2220 | | | | | | | | |
| : | | | | | | | | |
| CIO 2810 | Unit No. 81 | | | | | | | |
| CIO 2820 | | Unit No. 82 | | | | | | |
| CIO 2830 | | | Unit No. 83 | | | | | |
| CIO 2840 | | | | Unit No. 84 | | | | |
| CIO 2850 | | | | | Unit No. 85 | | | |
| CIO 2860 | | | | | | Unit No. 86 | | |
| CIO 2870 | | | | | | | Unit No. 87 | |
| CIO 2880 | | | | | | | | Unit No. 88 |
| CIO 2890 | | | | | | | | |
| CIO 2900 | | | | | | | | |
| CIO 2910 | | | | | | | | |
| CIO 2920 | | | | | | | | |
| CIO 2930 | | | | | | | | |
| CIO 2940 | | | | | | | | |
| CIO 2950 | | | | | | | | |

## 5-2-3 Types of Node Addresses in CompoNet Networks

There are three types of node addresses in a CompoNet Network.

- Word node addresses
- Bit node addresses

• Repeater Unit node addresses

| Node address type | Node name | | Node address name | Address range | Applicable Slave Units | Label printed on Unit | Color |
|---|---|---|---|---|---|---|---|
| Word node address | Word Slave Unit | Contact Input Unit | Input | 0 to 63 | Input Slave Units allocated 16, 8, or 4 inputs per node address | WORD NODE ADR | Orange |
| | | Contact Output Unit | Output | 0 to 63 | Output Slave Units allocated 16, 8, or 4 outputs per node address | WORD NODE ADR | Yellow |
| | | Contact I/O Unit | I/O | 0 to 63 | I/O Slave Units allocated 16, 8, or 4 inputs/outputs per node address. The same number is allocated for input and output word node addresses. | WORD NODE ADR | Orange and yellow |
| Bit node address | Bit Slave Unit | Contact Input Unit | Bit Input | 0 to 127 | Input Slave Units allocated 2 inputs per node address | BIT NODE ADR | Orange |
| | | Contact Output Unit | Bit Output | 0 to 127 | Output Slave Units allocated 2 outputs per node address | BIT NODE ADR | Yellow |
| | | Contact I/O Unit | Bit I/O | 0 to 127 | I/O Slave Units allocated 2 outputs per node address. The same number is allocated for input and output word node addresses. | BIT NODE ADR | Orange and yellow |
| Repeater Unit node address | Repeater Units | | Repeater Unit node | 0 to 63 | Repeater Units | RPT NODE ADR | Green |

The same address cannot be used twice for the same address type.

Example: IN1 cannot be used twice at the same time.

Example: A Contact I/O Unit uses both an IN and an OUT address.

Therefore IN/OUT1, cannot be used at the same time as OUT1 or IN1.

The same address can be used with different address types.

Example: IN1, OUT1, BIT IN1, and BIT OUT1 can be used at the same time.

**Note** The following table lists the destination addresses for sending messages to Slave Units.

| Slave Unit | Allocated address | Destination address for message |
|---|---|---|
| I/O Slave Unit | Input and output node addresses | Input node address |
| Slave Unit with 16 or more points | More than one node address, i.e., the number of addresses used would be the (total number of points ÷ 16) rounded up to the nearest integer. | Node address set on the rotary switch on the front of the Master Unit (the lowest address) |
| Other Slave Units | Node address set on the rotary switch on the front of the Master Unit | Node address set on the rotary switch on the front of the Master Unit |

## 5-2-4 Details of Slave Unit Allocation in I/O Memory

CompoNet Network I/O data is allocated in CPU Unit I/O memory in units of Word Slave Unit output addresses, Word Slave Unit input addresses, Bit Slave output addresses, and Bit Slave input addresses. Node address areas that are allocated in order of node addresses are reserved for Slave Units of the same type. In a CompoNet Network, each Unit is allocated a node address area of the size required for the Unit based on node address set for the Unit.

**Note** A single Unit is not limited to one node address area. If a Word Slave Unit has more than 16 points (e.g., 24 points), it is allocated more than one node address area (e.g., two node address areas). A Bit Slave with four points is allocated two node address areas.

### Word Slave Unit Data Allocation

Word Slave Units with no more than 16 points are allocated one word (i.e., the node address area for the node address set for the Unit). (See note.)

**Note** Slave Units with 8 points are also allocated one word. They use the lower byte of the word, and the upper byte remains not used.

Slave Units with more than 16 and no more than 32 points are allocated two words (i.e., the area for the node address set for the Unit plus next node address area). In the same way, below, multiple words are allocated (the set node address area and the following node address areas) to other Slave Units according to their sizes.

**Note** As long as the same words are not allocated to more than one Unit, the Input Area and Output Area with numerically the same node address can be allocated to Slave Units with different node addresses. (For example, OUT1 can be allocated to the 16 outputs for a Slave Unit set for node address 1, and IN1 can be allocated to the 16 inputs for an Expansion Slave Unit set for node address 0.)

**Output Data Allocation**

Output Area

| Word address | Bit 15 Bit 0 |
|---|---|
| +0 | OUT0 |
| +1 | OUT1 |
| +2 | OUT2 |
| : | : |
| +62 | OUT62 |
| +63 | OUT63 |

**Input Data Allocation**

Input Area

| Word address | Bit 15 Bit 0 |
|---|---|
| +0 | IN0 |
| +1 | IN1 |
| +2 | IN2 |
| : | : |
| +62 | IN62 |
| +63 | IN63 |

- Eight-point Input Slave Unit

IN area

| | | | | | | | | | | | | | | | |
|---|---|---|---|---|---|---|---|---|---|---|---|---|---|---|---|
| | | | Unused | | | | | 7 | 6 | 5 | 4 | 3 | 2 | 1 | 0 |

- Eight-point Output Slave Unit

OUT area

| | | | | | | | | | | | | | | | |
|---|---|---|---|---|---|---|---|---|---|---|---|---|---|---|---|
| | | | Unused | | | | | 7 | 6 | 5 | 4 | 3 | 2 | 1 | 0 |

- Sixteen-point Input Slave Unit

IN area

| | | | | | | | | | | | | | | | |
|---|---|---|---|---|---|---|---|---|---|---|---|---|---|---|---|
| 15 | 14 | 13 | 12 | 11 | 10 | 9 | 8 | 7 | 6 | 5 | 4 | 3 | 2 | 1 | 0 |

- Sixteen-point Output Slave Unit

OUT area

| | | | | | | | | | | | | | | | |
|---|---|---|---|---|---|---|---|---|---|---|---|---|---|---|---|
| 15 | 14 | 13 | 12 | 11 | 10 | 9 | 8 | 7 | 6 | 5 | 4 | 3 | 2 | 1 | 0 |

- Sixteen-point Mixed Slave Unit

OUT area

| | | | | | | | | | | | | | | | |
|---|---|---|---|---|---|---|---|---|---|---|---|---|---|---|---|
| | | | Unused | | | | | 7 | 6 | 5 | 4 | 3 | 2 | 1 | 0 |

IN area

| | | | | | | | | | | | | | | | |
|---|---|---|---|---|---|---|---|---|---|---|---|---|---|---|---|
| | | | Unused | | | | | 7 | 6 | 5 | 4 | 3 | 2 | 1 | 0 |

- Thirty-two-point Input Slave Unit

IN area

| | | | | | | | | | | | | | | | |
|---|---|---|---|---|---|---|---|---|---|---|---|---|---|---|---|
| 15 | 14 | 13 | 12 | 11 | 10 | 9 | 8 | 7 | 6 | 5 | 4 | 3 | 2 | 1 | 0 |

| | | | | | | | | | | | | | | | |
|---|---|---|---|---|---|---|---|---|---|---|---|---|---|---|---|
| 31 | 30 | 29 | 28 | 27 | 26 | 25 | 24 | 23 | 22 | 21 | 20 | 19 | 18 | 17 | 16 |

- Thirty-two-point Output Slave Unit

OUT area

| | | | | | | | | | | | | | | | |
|---|---|---|---|---|---|---|---|---|---|---|---|---|---|---|---|
| 15 | 14 | 13 | 12 | 11 | 10 | 9 | 8 | 7 | 6 | 5 | 4 | 3 | 2 | 1 | 0 |

| | | | | | | | | | | | | | | | |
|---|---|---|---|---|---|---|---|---|---|---|---|---|---|---|---|
| 31 | 30 | 29 | 28 | 27 | 26 | 25 | 24 | 23 | 22 | 21 | 20 | 19 | 18 | 17 | 16 |

- Thirty-two-point Mixed Slave Unit

OUT area

| | | | | | | | | | | | | | | | |
|---|---|---|---|---|---|---|---|---|---|---|---|---|---|---|---|
| 15 | 14 | 13 | 12 | 11 | 10 | 9 | 8 | 7 | 6 | 5 | 4 | 3 | 2 | 1 | 0 |

IN area

| | | | | | | | | | | | | | | | |
|---|---|---|---|---|---|---|---|---|---|---|---|---|---|---|---|
| 15 | 14 | 13 | 12 | 11 | 10 | 9 | 8 | 7 | 6 | 5 | 4 | 3 | 2 | 1 | 0 |

■ **Analog Input Slave Units**

Data to be allocated to the Communications Unit is selected by using one of the following methods, and it is transferred using remote I/O communications.

■ **Default Settings**

With the default settings, only the analog input values are set as the I/O data. Data of 4 words or 8 bytes is allocated to the IN area of the Master Unit.

| 15 8 7 0 |
|---|
| Analog input value for Input 0 |
| Analog input value for Input 1 |
| Analog input value for Input 2 |
| Analog input value for Input 3 |

■ **CX-Integrator**

The CX-Integrator can be used to assign the analog data in a preset combination with data such as Status Flags. By using the CX-Integrator, to make the settings combinations can be selected from a pull-down list.

Example: Analog Data + Top/Valley Detection Timing Flag (Shot Status)

| 15 8 7 0 | |
|---|---|
| Analog Data for Input 0 | |
| Analog Data for Input 1 | |
| Analog Data for Input 2 | |
| Analog Data for Input 3 | |
| Top Detection Timing Flag | Valley Detection Timing Flag |

**Procedure to Select Analog Data Using the CX-Integrator**

***1,2,3...***

1. Start the CX-Integrator.
2. In the Network Configuration Window, double-click the icon for the Analog Input Slave Unit. Alternatively, right-click the icon and select ***Parameters - Edit*** from the pop-up menu. The Configuration Window will be displayed.

■ **Analog Output Slave Units**

An Analog Output Slave Unit has one type of output data that is assigned by default. No setting is required. Two words (4 bytes) of output data are allocated. The data is allocated as two's complements.

| 15 8 7 0 |
|---|
| Analog output value for Output 0 |
| Analog output value for Output 1 |

## Data Assignment for Word Slave Unit + Expansion Unit

When an Expansion Unit is used, the IN and OUT data of the Expansion Unit is included in the allocation size of the Unit.

- Sixteen-point Input Slave Unit + Sixteen-point Expansion Input Unit

  Two node address areas are allocated: Node address m and node address m+1 in the IN area.

IN area

| 15 | 14 | 13 | 12 | 11 | 10 | 9 | 8 | 7 | 6 | 5 | 4 | 3 | 2 | 1 | 0 |
|---|---|---|---|---|---|---|---|---|---|---|---|---|---|---|---|
| 31 | 30 | 29 | 28 | 27 | 26 | 25 | 24 | 23 | 22 | 21 | 20 | 19 | 18 | 17 | 16 |

- Sixteen-point Input Slave Unit + Eight-point Input Expansion Unit

  Two node address areas are allocated: Node address m and node address m+1 in the IN area.

IN area

| 15 | 14 | 13 | 12 | 11 | 10 | 9 | 8 | 7 | 6 | 5 | 4 | 3 | 2 | 1 | 0 |
|---|---|---|---|---|---|---|---|---|---|---|---|---|---|---|---|
| | | | Unused | | | | | 23 | 22 | 21 | 20 | 19 | 18 | 17 | 16 |

- Sixteen-point Input Slave Unit + Sixteen-point Expansion Output Unit

  Two node address areas are allocated: Node address m in the IN area and node address m in the OUT area.

OUT area

| 15 | 14 | 13 | 12 | 11 | 10 | 9 | 8 | 7 | 6 | 5 | 4 | 3 | 2 | 1 | 0 |
|---|---|---|---|---|---|---|---|---|---|---|---|---|---|---|---|

IN area

| 15 | 14 | 13 | 12 | 11 | 10 | 9 | 8 | 7 | 6 | 5 | 4 | 3 | 2 | 1 | 0 |
|---|---|---|---|---|---|---|---|---|---|---|---|---|---|---|---|

- Sixteen-point Input Slave Unit + Eight-point Expansion Output Unit

  Two node address areas are allocated: Node address m in the IN area and node address m in the OUT area.

OUT area

| | | | | | | | | 7 | 6 | 5 | 4 | 3 | 2 | 1 | 0 |
|---|---|---|---|---|---|---|---|---|---|---|---|---|---|---|---|
| | | | Unused | | | | | | | | | | | | |

IN area

| 15 | 14 | 13 | 12 | 11 | 10 | 9 | 8 | 7 | 6 | 5 | 4 | 3 | 2 | 1 | 0 |
|---|---|---|---|---|---|---|---|---|---|---|---|---|---|---|---|

- Sixteen-point Output Slave Unit + Sixteen-point Expansion Output Unit

  Two node address areas are allocated: Node address m and node address m+1 in the OUT area.

OUT area

| 15 | 14 | 13 | 12 | 11 | 10 | 9 | 8 | 7 | 6 | 5 | 4 | 3 | 2 | 1 | 0 |
|---|---|---|---|---|---|---|---|---|---|---|---|---|---|---|---|
| 31 | 30 | 29 | 28 | 27 | 26 | 25 | 24 | 23 | 22 | 21 | 20 | 19 | 18 | 17 | 16 |

- Sixteen-point Output Slave Unit + Eight-point Expansion Output Unit

  Two node address areas are allocated: Node address m and node address m+1 in the OUT area.

OUT area

| 15 | 14 | 13 | 12 | 11 | 10 | 9 | 8 | 7 | 6 | 5 | 4 | 3 | 2 | 1 | 0 |
|---|---|---|---|---|---|---|---|---|---|---|---|---|---|---|---|
| | | | Unused | | | | | 23 | 22 | 21 | 20 | 19 | 18 | 17 | 16 |

- Sixteen-point Output Slave Unit + Sixteen-point Expansion Input Unit

  Two node address areas are allocated: Node address m in the OUT area and node address m in the IN area.

OUT area

| 15 | 14 | 13 | 12 | 11 | 10 | 9 | 8 | 7 | 6 | 5 | 4 | 3 | 2 | 1 | 0 |
|---|---|---|---|---|---|---|---|---|---|---|---|---|---|---|---|

IN area

| 15 | 14 | 13 | 12 | 11 | 10 | 9 | 8 | 7 | 6 | 5 | 4 | 3 | 2 | 1 | 0 |
|---|---|---|---|---|---|---|---|---|---|---|---|---|---|---|---|

- Sixteen-point Output Slave Unit + Eight-point Expansion Input Unit

  Two node address areas are allocated: Node address m in the OUT area and node address m in the IN area.

OUT area

| 15 | 14 | 13 | 12 | 11 | 10 | 9 | 8 | 7 | 6 | 5 | 4 | 3 | 2 | 1 | 0 |
|---|---|---|---|---|---|---|---|---|---|---|---|---|---|---|---|

IN area

| | | | | | | | | 7 | 6 | 5 | 4 | 3 | 2 | 1 | 0 |
|---|---|---|---|---|---|---|---|---|---|---|---|---|---|---|---|
| Unused | | | | | | | | | | | | | | | |

- I/O Example for Word Slave Units

  The number of I/O points for Word Slave Units in a CompoNet Network can be increased by using Expansion Units. The following table shows the Slave Unit and Expansion Unit models that can be used.

| Basic Unit | Expansion Unit | Inputs | Outputs |
|---|---|---|---|
| CRT1-ID16/ID16-1 | None | 16 | 0 |
| | XWT-ID08/ID08-1 | 24 | 0 |
| | XWT-OD08/OD08-1 | 16 | 8 |
| | XWT-ID16/ID16-1 | 32 | 0 |
| | XWT-OD16/OD16-1 | 16 | 16 |
| CRT1-OD16/OD16-1<br>CRT1-ROS16/ROF16 | None | 0 | 16 |
| | XWT-ID08/ID08-1 | 8 | 16 |
| | XWT-OD08/OD08-1 | 0 | 24 |
| | XWT-ID16/ID16-1 | 16 | 16 |
| | XWT-OD16/OD16-1 | 0 | 32 |

- I/O Allocation when Expansion Units Are Used

  Memory is allocated to a Basic Unit with an Expansion Unit in the same way as it would be allocated to a Slave Unit of the same size as the combination of the sizes of the Basic Unit and Expansion Unit.

  The following examples show the allocations when an Expansion Unit is connected to a Basic Unit at node address m (m = 0, 1, 2,…).

**Note**

(1) For Slave Units with both inputs and outputs (see note (2)), the Input Area node address is used as the Slave Unit node address. Therefore, the Participation Flag and Communications Error Flag correspond to node address bits for the Input Area.

(2) A Basic Unit and Expansion Unit combined to provide both inputs and outputs, or a CRT1B-MD Bit Slave, which provides both inputs and outputs.

## Bit Slave Unit Data Allocation

Bit Slave Units are allocated two bits for each two points. For example, eight Slave Units with two points each would be allocated one word. Likewise, four Slave Units with two points each and two Slave Units with four points each would be allocated one word.

A Slave Unit with two points is allocated two bits in the node address area for the node address set for the Unit.

A Slave Unit with four points is allocated four bits, two bits in the node address area for the node address set for the Unit and two bits in the next node address area.

**Note** As long as the same memory is not used by more than one Unit, the Bit Input Area and the Bit Output Area with the same numeric bit node address can be allocated to Bit Slave Units with different node addresses. (For example, two output bits for a 2-point Slave Unit set for node address 1 can be allocated BIT OUT1, and the last two input bits for a 4-input Slave Unit set for node address 0 can be allocated BIT IN1.)

**Bit Input Data Allocations**

| Bits / Word address | 15 14 | 13 12 | 11 10 | 9 8 | 7 6 | 5 4 | 3 2 | 1 0 |
|---|---|---|---|---|---|---|---|---|
| +0 | BIT IN7 | BIT IN6 | BIT IN5 | BIT IN4 | BIT IN3 | BIT IN2 | BIT IN1 | BIT IN0 |
| +1 | BIT IN15 | BIT IN14 | BIT IN13 | BIT IN12 | BIT IN11 | BIT IN10 | BIT IN9 | BIT IN8 |
| +2 | BIT IN23 | BIT IN22 | BIT IN21 | BIT IN20 | BIT IN19 | BIT IN18 | BIT IN17 | BIT IN16 |
| +3 | BIT IN31 | BIT IN30 | BIT IN29 | BIT IN28 | BIT IN27 | BIT IN26 | BIT IN25 | BIT IN24 |
| +4 | BIT IN39 | BIT IN38 | BIT IN37 | BIT IN36 | BIT IN35 | BIT IN34 | BIT IN33 | BIT IN32 |
| +5 | BIT IN47 | BIT IN46 | BIT IN45 | BIT IN44 | BIT IN43 | BIT IN42 | BIT IN41 | BIT IN40 |
| +6 | BIT IN55 | BIT IN54 | BIT IN53 | BIT IN52 | BIT IN51 | BIT IN50 | BIT IN49 | BIT IN48 |
| +7 | BIT IN63 | BIT IN62 | BIT IN61 | BIT IN60 | BIT IN59 | BIT IN58 | BIT IN57 | BIT IN56 |
| +8 | BIT IN71 | BIT IN70 | BIT IN69 | BIT IN68 | BIT IN67 | BIT IN66 | BIT IN65 | BIT IN64 |
| +9 | BIT IN79 | BIT IN78 | BIT IN77 | BIT IN76 | BIT IN75 | BIT IN74 | BIT IN73 | BIT IN72 |
| +10 | BIT IN87 | BIT IN86 | BIT IN85 | BIT IN84 | BIT IN83 | BIT IN82 | BIT IN81 | BIT IN80 |
| +11 | BIT IN95 | BIT IN94 | BIT IN93 | BIT IN92 | BIT IN91 | BIT IN90 | BIT IN89 | BIT IN88 |
| +12 | BIT IN103 | BIT IN102 | BIT IN101 | BIT IN100 | BIT IN99 | BIT IN98 | BIT IN97 | BIT IN96 |
| +13 | BIT IN111 | BIT IN110 | BIT IN109 | BIT IN108 | BIT IN107 | BIT IN106 | BIT IN105 | BIT IN104 |
| +14 | BIT IN119 | BIT IN118 | BIT IN117 | BIT IN116 | BIT IN115 | BIT IN114 | BIT IN113 | BIT IN112 |
| +15 | BIT IN127 | BIT IN126 | BIT IN125 | BIT IN124 | BIT IN123 | BIT IN122 | BIT IN121 | BIT IN120 |

**Bit Output Data Allocations**

| Bits / Word address | 15 14 | 13 12 | 11 10 | 9 8 | 7 6 | 5 4 | 3 2 | 1 0 |
|---|---|---|---|---|---|---|---|---|
| +0 | BIT OUT7 | BIT OUT6 | BIT OUT5 | BIT OUT4 | BIT OUT3 | BIT OUT2 | BIT OUT1 | BIT OUT0 |
| +1 | BIT OUT15 | BIT OUT14 | BIT OUT13 | BIT OUT12 | BIT OUT11 | BIT OUT10 | BIT OUT9 | BIT OUT8 |
| +2 | BIT OUT23 | BIT OUT22 | BIT OUT21 | BIT OUT20 | BIT OUT19 | BIT OUT18 | BIT OUT17 | BIT OUT16 |
| +3 | BIT OUT31 | BIT OUT30 | BIT OUT29 | BIT OUT28 | BIT OUT27 | BIT OUT26 | BIT OUT25 | BIT OUT24 |
| +4 | BIT OUT39 | BIT OUT38 | BIT OUT37 | BIT OUT36 | BIT OUT35 | BIT OUT34 | BIT OUT33 | BIT OUT32 |
| +5 | BIT OUT47 | BIT OUT46 | BIT OUT45 | BIT OUT44 | BIT OUT43 | BIT OUT42 | BIT OUT41 | BIT OUT40 |
| +6 | BIT OUT55 | BIT OUT54 | BIT OUT53 | BIT OUT52 | BIT OUT51 | BIT OUT50 | BIT OUT49 | BIT OUT48 |
| +7 | BIT OUT63 | BIT OUT62 | BIT OUT61 | BIT OUT60 | BIT OUT59 | BIT OUT58 | BIT OUT57 | BIT OUT56 |
| +8 | BIT OUT71 | BIT OUT70 | BIT OUT69 | BIT OUT68 | BIT OUT67 | BIT OUT66 | BIT OUT65 | BIT OUT64 |
| +9 | BIT OUT79 | BIT OUT78 | BIT OUT77 | BIT OUT76 | BIT OUT75 | BIT OUT74 | BIT OUT73 | BIT OUT72 |
| +10 | BIT OUT87 | BIT OUT86 | BIT OUT85 | BIT OUT84 | BIT OUT83 | BIT OUT82 | BIT OUT81 | BIT OUT80 |
| +11 | BIT OUT95 | BIT OUT94 | BIT OUT93 | BIT OUT92 | BIT OUT91 | BIT OUT90 | BIT OUT89 | BIT OUT88 |
| +12 | BIT OUT103 | BIT OUT102 | BIT OUT101 | BIT OUT100 | BIT OUT99 | BIT OUT98 | BIT OUT97 | BIT OUT96 |
| +13 | BIT OUT111 | BIT OUT110 | BIT OUT109 | BIT OUT108 | BIT OUT107 | BIT OUT106 | BIT OUT105 | BIT OUT104 |
| +14 | BIT OUT119 | BIT OUT118 | BIT OUT117 | BIT OUT116 | BIT OUT115 | BIT OUT114 | BIT OUT113 | BIT OUT112 |
| +15 | BIT OUT127 | BIT OUT126 | BIT OUT125 | BIT OUT124 | BIT OUT123 | BIT OUT122 | BIT OUT121 | BIT OUT120 |

- Two-point Input Slave Unit

Bit IN area

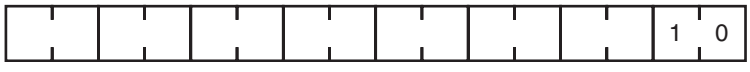


- Four-point Input Slave Unit

Bit IN area

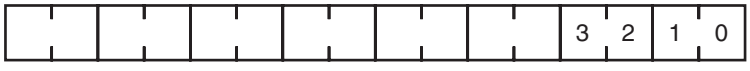


- Two-point Output Slave Unit

Bit OUT area

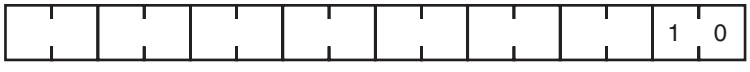


- Four-point Mixed Slave Unit

Bit OUT area

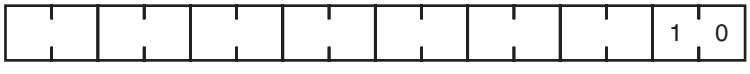


Bit IN area

In Bit Slave Units, the node address area is used consecutively without spaces. For example, one word would be allocated for eight Slave Units each with two points. Likewise, one word would be allocated for four sets of Slave Units each with two points and two Slave Units each with four points.

## Area Allocations According to Communications Mode Number

Word output data, word input data, bit output data, and bit input data are allocated according to communications mode numbers as shown below.

### Communications Modes Other Than Mode 8

The fixed number of node address areas for word output data, word input data, bit output data, and bit input data are allocated in order in the Special I/O Unit Area. The first address that is allocated depends on the unit number of the Master Unit.

| Communications mode number | Pattern |
|---|---|
| 0 | Special I/O Unit Area CIO 2000 + (10 x unit number) → |

| Word address | Bit 15 … Bit 0 | |
|---|---|---|
| +0 | [ OUT0 ] | |
| : | : | |
| +7 | [ OUT7 ] | |
| +8 | [ IN0 ] | |
| : | : | |
| +15 | [ IN7 ] | |
| +16 | Status | |
| +17 | Parameters | |
| +18 | Communications Error Flags: OUT0 to OUT7 | Participation Flags: OUT0 to OUT7 |
| +19 | Communications Error Flags: IN0 to IN7 | Participation Flags: IN0 to IN7 |

| Communications mode number | Pattern |
|---|---|
| 1 | Special I/O Unit Area CIO 2000 + (10 x unit number) → |

| Word address | Bit 15 … Bit 0 | |
|---|---|---|
| +0 | [ OUT0 ] | |
| : | : | |
| +15 | [ OUT15 ] | |
| +16 | [ IN0 ] | |
| : | : | |
| +31 | [ IN15 ] | |
| +32 | Status | |
| +33 | Parameters | |
| +34 | Communications Error Flags: OUT0 to OUT7 | Participation Flags: OUT0 to OUT7 |
| +35 | Communications Error Flags: IN0 to IN7 | Participation Flags: IN0 to IN7 |
| +36 | Communications Error Flags: OUT8 to OUT15 | Participation Flags: OUT8 to OUT15 |
| +37 | Communications Error Flags: IN8 to IN15 | Participation Flags: IN8 to IN15 |

| Communications mode number | Pattern |
|---|---|
| 2 | Special I/O Unit Area CIO 2000 + (10 x unit number) → |

| Word address | Bit 15 | Bit 0 |
|---|---|---|
| +0 | [ OUT0 ] | |
| : | : | |
| +30 | [ OUT30] | |
| +31 | [ OUT31] | |
| +32 | [ IN0 ] | |
| : | : | |
| +62 | [ IN30 ] | |
| +63 | [ IN31 ] | |
| +64 | Status | |
| +65 | Parameters | |
| +66 | Communications Error Flags: OUT0 to OUT7 | Participation Flags: OUT0 to OUT7 |
| +67 | Communications Error Flags: IN0 to IN7 | Participation Flags: IN0 to IN7 |
| +68 | Communications Error Flags: OUT8 to OUT15 | Participation Flags: OUT8 to OUT15 |
| +69 | Communications Error Flags: IN8 to IN15 | Participation Flags: IN8 to IN15 |
| +70 | Communications Error Flags: OUT16 to OUT23 | Participation Flags: OUT16 to OUT23 |
| +71 | Communications Error Flags: IN16 to IN23 | Participation Flags: IN16 to IN23 |
| +72 | Communications Error Flags: OUT24 to OUT31 | Participation Flags: OUT24 to OUT31 |
| +73 | Communications Error Flags: IN24 to IN31 | Participation Flags: IN24 to IN31 |

3

Special I/O Unit Area CIO 2000 + (10 x unit number) →

| Word address | Bit 15 | | | | | | | Bit 0 |
|---|---|---|---|---|---|---|---|---|
| +0 | [ OUT0 ] | | | | | | | |
| : | : | | | | | | | |
| +15 | [ OUT15 ] | | | | | | | |
| +16 | [ IN0 ] | | | | | | | |
| : | : | | | | | | | |
| +31 | [ IN15 ] | | | | | | | |
| +32 | [ BIT OUT 7] | [ BIT OUT 6] | [ BIT OUT 5] | [ BIT OUT 4] | [ BIT OUT 3] | [ BIT OUT 2] | [ BIT OUT 1] | [ BIT OUT 0] |
| : | : | : | : | : | : | : | : | : |
| +39 | [ BIT OUT 63] | [ BIT OUT 62] | [ BIT OUT 61] | [ BIT OUT 60] | [ BIT OUT 59] | [ BIT OUT 58] | [ BIT OUT 57] | [ BIT OUT 56] |
| +40 | [ BIT IN 7] | [ BIT IN 6] | [ BIT IN 5] | [ BIT IN 4] | [ BIT IN 3] | [ BIT IN 2] | [ BIT IN 1] | [ BIT IN 0] |
| : | : | : | : | : | : | : | : | : |
| +47 | [ BIT IN 63] | [ BIT IN 62] | [ BIT IN 61] | [ BIT IN 60] | [ BIT IN 59] | [ BIT IN 58] | [ BIT IN 57] | [ BIT IN 56] |
| +48 | Status | | | | | | | |
| +49 | Parameters | | | | | | | |
| +50 | Communications Error Flags: OUT0 to OUT7 | | | | Participation Flags: OUT0 to OUT7 | | | |
| +51 | Communications Error Flags: IN0 to IN7 | | | | Participation Flags: IN0 to IN7 | | | |
| +52 | Communications Error Flags: OUT8 to OUT15 | | | | Participation Flags: OUT8 to OUT15 | | | |
| +53 | Communications Error Flags: IN8 to IN15 | | | | Participation Flags: IN8 to IN15 | | | |
| +54 | Communications Error Flags: BIT OUT0 to BIT OUT7 | | | | Participation Flags: BIT OUT0 to BIT OUT7 | | | |
| +55 | Communications Error Flags: BIT IN0 to BIT IN7 | | | | Participation Flags: BIT IN0 to BIT IN7 | | | |
| : | : | | | | : | | | |
| +68 | Communications Error Flags: BIT OUT56 to BIT OUT63 | | | | Participation Flags: BIT OUT56 to BIT OUT63 | | | |
| +69 | Communications Error Flags: BIT IN56 to BIT IN63 | | | | Participation Flags: BIT IN56 to BIT IN63 | | | |

**Communications Mode No. 8: Software Setting**

When using communications mode 8 (Software Setting Mode), the CompoNet Unit IN/OUT information can be allocated in the CIO, DM, WR, and HR Areas, in addition to the Special I/O Unit Area.

The Software Setting Table is used in the following situations.

- When allocating words in an area other than the Special I/O Unit Area to Slave Units
- When setting the number of words allocated, e.g., when words after those allocated to the Slave Units will be used for another purpose.

In the Software Setting Mode, memory is allocated to each Word Unit and Bit Unit for the Word IN/OUT Areas, Bit IN/OUT Areas, Participation Flags, and Communications Error Flags.

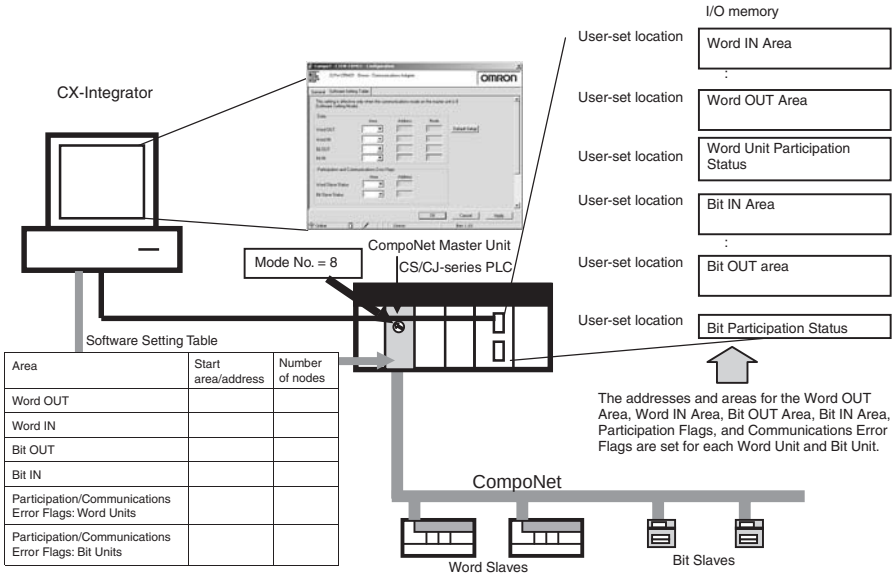


Refer to the *SYSMAC CS/CJ/CP/NSJ Series CX-Integrator Version 2.3 Operation Manual* (Cat. No. W464) for the editing procedures for software setting tables.

## ■ Word Slave Output Area (OUT)

The first address is specified.

| Word address | Bit 15 — Bit 0 |
|---|---|
| +0 | [ OUT0 ] |
| +1 | [ OUT1 ] |
| +2 | [ OUT2 ] |
| : | : |
| +N-1 | [ OUT ( N-1 ) ] |
| : | Not allocated. |
| +63 | Not allocated. |

The number of nodes address areas is specified.

## ■ Word Slave Input Area (IN)

The first address is specified.

| Word address | Bit 15 — Bit 0 |
|---|---|
| +0 | [ IN0 ] |
| +1 | [ IN1 ] |
| +2 | [ IN2 ] |
| : | : |
| +N-1 | [ IN ( N-1 ) ] |
| : | Not allocated. |
| +63 | Not allocated. |

The number of nodes address areas is specified.

### ■ Bit Slave Output Area (BIT OUT)

The first address is specified.

| Word address \ Bit | 15 14 | 13 12 | 11 10 | 9 8 | 7 6 | 5 4 | 3 2 | 1 0 |
|---|---|---|---|---|---|---|---|---|
| +0 | [ BIT IN 7] | [ BIT IN 6] | [ BIT IN 5] | [ BIT IN 4] | [ BIT IN 3] | [ BIT IN 2] | [ BIT IN 1] | [ BIT IN 0] |
| +1 | [BIT IN 15] | [ BIT IN 14] | [ BIT IN 13] | [ BIT IN 12] | [ BIT IN 11] | [ BIT IN 10] | [ BIT IN 9] | [ BIT IN 8] |
| +2 | [BIT IN 23] | [ BIT IN 22] | [ BIT IN 21] | [ BIT IN 20] | [ BIT IN 19] | [ BIT IN 18] | [ BIT IN 17] | [ BIT IN 16] |
| +3 | [ BIT IN 31] | [ BIT IN 30] | [ BIT IN 29] | [ BIT IN 28] | [ BIT IN 27] | [ BIT IN 26] | [ BIT IN 25] | [ BIT IN 24] |
| +4 | [ BIT IN 39] | [ BIT IN 38] | [ BIT IN 37] | [ BIT IN 36] | [ BIT IN 35] | [ BIT IN 34] | [ BIT IN 33] | [ BIT IN 32] |
| +5 | [ BIT IN 47] | [ BIT IN 46] | [ BIT IN 45] | [ BIT IN 44] | [ BIT IN 43] | [ BIT IN 42] | [ BIT IN 41] | [ BIT IN 40] |
| +6 | [ BIT IN 55] | [ BIT IN 54] | [ BIT IN 53] | [ BIT IN 52] | [ BIT IN 51] | [ BIT IN 50] | [ BIT IN 49] | [ BIT IN 48] |
| +7 | [ BIT IN 63] | [ BIT IN 62] | [ BIT IN 61] | [ BIT IN 60] | [ BIT IN 59] | [ BIT IN 58] | [ BIT IN 57] | [ BIT IN 56] |
| +8 | [ BIT IN 71] | [ BIT IN 70] | [ BIT IN 69] | [ BIT IN 68] | [ BIT IN 67] | [ BIT IN 66] | [ BIT IN 65] | [ BIT IN 64] |
| +9 | [ BIT IN 79] | [ BIT IN 78] | [ BIT IN 77] | [ BIT IN 76] | [ BIT IN 75] | [ BIT IN 74] | [ BIT IN 73] | [ BIT IN 72] |
| +10 | Not allocated. | Not allocated. | Not allocated. | Not allocated. | Not allocated. | Not allocated. | [ BIT IN 81] | [ BIT IN 80] |
| +11 | Not allocated. | Not allocated. | Not allocated. | Not allocated. | Not allocated. | Not allocated. | Not allocated. | Not allocated. |
| +12 | Not allocated. | Not allocated. | Not allocated. | Not allocated. | Not allocated. | Not allocated. | Not allocated. | Not allocated. |
| +13 | Not allocated. | Not allocated. | Not allocated. | Not allocated. | Not allocated. | Not allocated. | Not allocated. | Not allocated. |
| +14 | Not allocated. | Not allocated. | Not allocated. | Not allocated. | Not allocated. | Not allocated. | Not allocated. | Not allocated. |
| +15 | Not allocated. | Not allocated. | Not allocated. | Not allocated. | Not allocated. | Not allocated. | Not allocated. | Not allocated. |

Example: When 82 is specified as the number of nodes N

### ■ Bit Slave Input Area (BIT IN)

The first address is specified.

| Word address \ Bit | 15 14 | 13 12 | 11 10 | 9 8 | 7 6 | 5 4 | 3 2 | 1 0 |
|---|---|---|---|---|---|---|---|---|
| +0 | [ BIT OUT 7] | [ BIT OUT 6] | [ BIT OUT 5] | [ BIT OUT 4] | [ BIT OUT 3] | [ BIT OUT 2] | [ BIT OUT 1] | [ BIT OUT 0] |
| +1 | [ BIT OUT 15] | [ BIT OUT 14] | [ BIT OUT 13] | [ BIT OUT 12] | [ BIT OUT 11] | [ BIT OUT 10] | [ BIT OUT 9] | [ BIT OUT 8] |
| +2 | [ BIT OUT 23] | [ BIT OUT 22] | [ BIT OUT 21] | [ BIT OUT 20] | [ BIT OUT 19] | [ BIT OUT 18] | [ BIT OUT 17] | [ BIT OUT 16] |
| +3 | [ BIT OUT 31] | [ BIT OUT 30] | [ BIT OUT 29] | [ BIT OUT 28] | [ BIT OUT 27] | [ BIT OUT 26] | [ BIT OUT 25] | [ BIT OUT 24] |
| +4 | [ BIT OUT 39] | [ BIT OUT 38] | [ BIT OUT 37] | [ BIT OUT 36] | [ BIT OUT 35] | [ BIT OUT 34] | [ BIT OUT 33] | [ BIT OUT 32] |
| +5 | [ BIT OUT 47] | [ BIT OUT 46] | [ BIT OUT 45] | [ BIT OUT 44] | [ BIT OUT 43] | [ BIT OUT 42] | [ BIT OUT 41] | [ BIT OUT 40] |
| +6 | [ BIT OUT 55] | [ BIT OUT 54] | [ BIT OUT 53] | [ BIT OUT 52] | [ BIT OUT 51] | [ BIT OUT 50] | [ BIT OUT 49] | [ BIT OUT 48] |
| +7 | [ BIT OUT 63] | [ BIT OUT 62] | [ BIT OUT 61] | [ BIT OUT 60] | [ BIT OUT 59] | [ BIT OUT 58] | [ BIT OUT 57] | [ BIT OUT 56] |
| +8 | [ BIT OUT 71] | [ BIT OUT 70] | [ BIT OUT 69] | [ BIT OUT 68] | [ BIT OUT 67] | [ BIT OUT 66] | [ BIT OUT 65] | [ BIT OUT 64] |
| +9 | [ BIT OUT 79] | [ BIT OUT 78] | [ BIT OUT 77] | [ BIT OUT 76] | [ BIT OUT 75] | [ BIT OUT 74] | [ BIT OUT 73] | [ BIT OUT 72] |
| +10 | Not allocated. | Not allocated. | Not allocated. | Not allocated. | Not allocated. | Not allocated. | [ BIT OUT 81] | [ BIT OUT 80] |
| +11 | Not allocated. | Not allocated. | Not allocated. | Not allocated. | Not allocated. | Not allocated. | Not allocated. | Not allocated. |
| +12 | Not allocated. | Not allocated. | Not allocated. | Not allocated. | Not allocated. | Not allocated. | Not allocated. | Not allocated. |
| +13 | Not allocated. | Not allocated. | Not allocated. | Not allocated. | Not allocated. | Not allocated. | Not allocated. | Not allocated. |
| +14 | Not allocated. | Not allocated. | Not allocated. | Not allocated. | Not allocated. | Not allocated. | Not allocated. | Not allocated. |
| +15 | Not allocated. | Not allocated. | Not allocated. | Not allocated. | Not allocated. | Not allocated. | Not allocated. | Not allocated. |

Example: When 82 is specified as the number of nodes N

### ■ Word Slave Participation Flags, and Communications Error Flags (Status)

The first address is specified.

| Word address | Bit 15 | Bit 0 |
|---|---|---|
| +0 | Communications Error Flags: OUT0 to OUT7 | Participation Flags: OUT0 to OUT7 |
| +1 | Communications Error Flags: IN0 to IN7 | Participation Flags: IN0 to IN7 |
| : | : | : |
| +14 | Communications Error Flags: OUT56 to OUT63 | Participation Flags: OUT56 to OUT63 |
| +15 | Communications Error Flags: IN56 to IN63 | Participation Flags: IN56 to IN63 |

The number of nodes N is specified.

### ■ Bit Slave Participation Flags and Communications Error Flags (Bit Status)

The first address is specified.

| Word address | Bit 15 | Bit 0 |
|---|---|---|
| +0 | Communications Error Flags: BIT OUT0 to BIT OUT7 | Participation Flags: BIT OUT0 to BIT OUT7 |
| +1 | Communications Error Flags: BIT IN0 to BIT IN7 | Participation Flags: BIT IN0 to BIT IN7 |
| : | : | : |
| +30 | Communications Error Flags: BIT OUT 120 to BIT OUT 127 | Participation Flags: BIT OUT 120 to BIT OUT 127 |
| +31 | Communications Error Flags: BIT IN 120 to BIT IN 127 | Participation Flags: BIT IN 120 to BIT IN 127 |

The number of nodes N is specified.

## 5-2-5 Status Area Allocation

The Status Area consists of the following three items.

- Status: The status of the network and of the Master Unit
- Parameters: Remote I/O Communications Startup Switches

- Participation Flags and Communications Error Flags: Participation and error flags for applicable Slave Units.

## Status

The status of the Master Unit and the entire network are stored here.

| Word | Bits | | | | | | | | | | | | | | | |
|---|---|---|---|---|---|---|---|---|---|---|---|---|---|---|---|---|
| | 15 | 14 | 13 | 12 | 11 | 10 | 09 | 08 | 07 | 06 | 05 | 04 | 03 | 02 | 01 | 00 |
| +m (See note.) | Status | | | | | | | | | | | | | | | |

**Note** The value of +m depends on the communications mode as follows: The value is +16 for communications mode 0, +32 for mode 1, +64 for mode 2, +48 for mode 3, and +0 for mode 8.

| Bit address | Name | Contents |
|---|---|---|
| 00 | Communications Error Flag | OFF: Normal<br>ON: Error<br>Turns ON when a communications error occurs at even one applicable Slave Unit. (See note.)<br>**Note** This applies to all Slave Units if SW4 (REGS) on the Master Unit is turned OFF when the power is turned ON. If SW4 is turned ON when the power is turned ON, then this applies to registered Slave Units only. |
| 01 | Registration Table Verification Error Flag | Enabled only in Registration Table Enable Mode, i.e., when SW4 (REGS) is turned ON on the Master Unit when the power is turned ON.<br>OFF: Normal<br>ON: Verification error<br>Turns ON if the actual Slave Unit node addresses and corresponding Slave Unit models do not agree with the information in the Registration Table when the power is turned ON.<br>**Note** Remote I/O communications will start even if this flag is ON. |
| 02 | Communications Error Communications Stop Flag | OFF: Normal, or SW3 (ESTP) on the Master Unit is turned OFF (Communications Error Communications Stop Mode disabled).<br>ON: Error. SW3 (ESTP) on the Master Unit is turned ON (Communications Error Communications Stop Mode enabled) and remote I/O communications were stopped because of a communications error.<br>Once this flag turns ON, it remains ON until the power is cycled or the Unit is restarted. |
| 03 | Slave Unit Duplicated Address Error Flag | OFF: Normal<br>ON: Error (The same node address is set for more than one Slave Unit, the same node address area is being used by more than one Slave Unit, or a different type of Slave Unit is participating at the same address after the original Slave Unit left the network.)<br>**Note** Remote I/O communications will start even if this flag is ON. |
| 04 | Repeater Unit Communications Error Flag | OFF: Normal<br>ON: Error<br>**Note** Remote I/O communications will start even if this flag is ON. |

| Bit address | Name | Contents |
|---|---|---|
| 05 | Repeater Unit Node Duplicated Address Error Flag | OFF: Normal<br>ON: Error<br>**Note** Remote I/O communications will start even if this flag is ON. |
| 06 | All Registered Slave Units Participating Flag | Enabled only in Registration Table Enable Mode, i.e., when SW4 (REGS) is turned ON on the Master Unit when the power is turned ON.<br>OFF: A Slave Unit is not participating. (Not all Slave Units in the Registration Table are participating.)<br>ON: All Slave Units in the Registration Table are participating.<br>**Note** Turns ON when all Slave Units in the Registration Table are participating, even if an unregistered Slave Unit is also participating.<br>**Note** When the Registered Slave Unit Participation Standby Mode is enabled, remote I/O communications will stop while this flag is OFF. They start when it turns ON. |
| 07 | Remote I/O Communications Started Flag | OFF: Remote I/O communications are stopped.<br>ON: Remote I/O communications are operating. |
| 08 | Ladder Operation Allowed Flag in Registration Table Enabled Mode | OFF: Ladder program operations are not possible. (The ladder program should not be used in relation to remote I/O communications.)<br>ON: Ladder program operations are possible. (The ladder program can be used in relation to remote I/O communications.)<br>**Note** Flag status is determined by a logical AND based on bit 0 (no communications error), bit 6 (all registered Slave Units participating), and bit 7 (remote I/O communications operating). |
| 09 | Reserved | Cannot be used. |
| 10 | Registration Table Mode Flag | OFF: Registration Table Disable Mode. SW4 (REGS) on the Master Unit was turned OFF when the power was turned ON, or the Registration Table data is illegal.<br>ON: Registration Table Enable Mode. SW4 (REGS) on the Master Unit was turned ON when the power was turned ON, and the Registration Table data is not illegal. |
| 11 | Reserved | Cannot be used. |
| 12 | Representative Warning Status Flag | Logical OR of the Warning Status Flags for all Slave Units. |
| 13 | Representative Alarm Status Flag | Logical OR of the Alarm Status Flags for all Slave Units. |
| 14 | Reserved | Cannot be used. |
| 15 | Reserved | Cannot be used. |

**Note** Bits 0, 1, and 3 output a logical OR of the status of all Slave Units other than Repeater Units; bits 4 and 5 output an OR of Repeater Unit status only; and bit 2 outputs an OR of the status of all Slave Units including Repeater Units.

Example: In this example, operation is considered normal when all registered Slave Units are participating, there are no communications errors at any registered Slave Units, and remote I/O communications are operating.

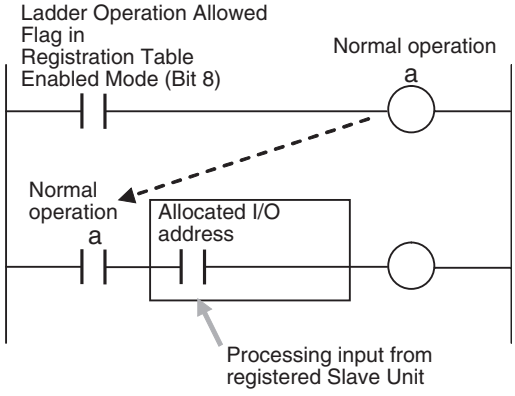


## Parameters

| Word | Bits | | | | | | | | | | | | | | | |
|---|---|---|---|---|---|---|---|---|---|---|---|---|---|---|---|---|
| | 15 | 14 | 13 | 12 | 11 | 10 | 09 | 08 | 07 | 06 | 05 | 04 | 03 | 02 | 01 | 00 |
| +n (See note.) | Parameters | | | | | | | | | | | | | | | |

**Note** The value of +n depends on the communications mode as follows: The value is +17 for communications mode number 0, +33 for mode 1, +65 for mode 2, +49 for mode 3, and +1 for mode 8.

| Bit address | Name | Contents |
|---|---|---|
| 00 | Remote I/O Communications Start Switch | OFF: No processing<br>ON: Starts remote I/O communications when turned from OFF to ON. This switch is automatically turned OFF by the system after the system detects that the switch has turned ON.<br>**Note 1.** This bit is enabled only in I/O Communications Manual Start Mode. The mode can be selective with the CX-Integrator.<br>**Note 2.** When the I/O Communications Manual Start Mode is disabled or when the remote I/O communications have already been in operation, a command to start the remote I/O communications is invalid even if the system detects the switch is turned on. |
| 01 | Cannot be used. | --- |
| 02 to 15 | Not used. | 0 |

## Participation Flags and Communications Error Flags

These flags indicate nodes participating in the network and nodes where errors have occurred after participation has started.

In Registration Table Enable Mode, only registered Slave Units can participate. (Other Slave Units cannot participate.)

| Flag name | Contents |
|---|---|
| Participation Flag | ON: The applicable Slave Unit has participated in the network. (See note 3.)<br>OFF: Power has been interrupted or a restart has been executed.<br>**Note** After the system has started, this flag turns ON once the applicable Slave Unit has participated in the network. (It stays ON even if the Slave Unit stops participating because of a communications error.) (See note 3.) |
| Communications Error Flag | ON: A communications error occurred at the applicable Slave Unit participating in the network. (See note 3.)<br>OFF: A communications error has not occurred at the applicable Slave Unit participating in the network. (See note 3.)<br>**Note 1**: A Communications Error Flag turns ON if the applicable Slave Unit cannot communicate with the Master Unit for any reason after the Slave Unit has joined the network (i.e., if the Participation Flag is ON). It turns OFF when the error is removed.<br>**Note 2**: In Communications Error Communications Stop Mode, (i.e., when ESTP is turned ON on the DIP switch on the front of the Master Unit), all remote I/O communications will stop if a communications error occurs at any applicable Slave Units. (See note 3.) |

**Note 3:** When SW4 (REGS) on the front of the Master Unit is turned OFF (registered Slave Unit function disabled), this applies to all Slave Units. When SW4 is turned ON (registered Slave Unit function enabled), it applies only to registered Slave Units.

Bits are allocated for each Slave Unit node address. The leftmost 8 bits are allocated for Communications Error Flags, and the rightmost 8 bits are allocated for Participation Flags.

With Contact I/O Units, only Input Flags for input nodes are allocated.
The portion of memory that can be used for Slave Units is allocated in I/O memory at the CPU Unit. (For example, in communications mode 0, there are eight nodes each for inputs and outputs, so words +0 and +1 are used.)

**Communications Mode 0**

| Word (See note.) | Bits | | | | | | | | | | | | | | | |
|---|---|---|---|---|---|---|---|---|---|---|---|---|---|---|---|---|
| | 15 | 14 | 13 | 12 | 11 | 10 | 09 | 08 | 07 | 06 | 05 | 04 | 03 | 02 | 01 | 00 |
| +18 | Output Slave Unit Communications Error Flags (0 to 7) | | | | | | | | Output Slave Unit Participation Flags (0 to 7) | | | | | | | |
| +19 | Input Slave Unit Communications Error Flags (0 to 7) | | | | | | | | Input Slave Unit Participation Flags (0 to 7) | | | | | | | |

**Note** Word +0 is assumed to be the first word of the memory allocated to Special I/O Units, i.e., CIO 2000 + (10 × unit number).

**Communications Mode 1**

| Word (See note.) | Bits | | | | | | | | | | | | | | | |
|---|---|---|---|---|---|---|---|---|---|---|---|---|---|---|---|---|
| | 15 | 14 | 13 | 12 | 11 | 10 | 09 | 08 | 07 | 06 | 05 | 04 | 03 | 02 | 01 | 00 |
| +34 | Output Slave Unit Communications Error Flags (0 to 7) | | | | | | | | Output Slave Unit Participation Flags (0 to 7) | | | | | | | |
| +35 | Input Slave Unit Communications Error Flags (0 to 7) | | | | | | | | Input Slave Unit Participation Flags (0 to 7) | | | | | | | |

| Word (See note.) | Bits | | | | | | | | | | | | | | | |
|---|---|---|---|---|---|---|---|---|---|---|---|---|---|---|---|---|
| | 15 | 14 | 13 | 12 | 11 | 10 | 09 | 08 | 07 | 06 | 05 | 04 | 03 | 02 | 01 | 00 |
| +36 | Output Slave Unit Communications Error Flags (8 to 15) | | | | | | | | Output Slave Unit Participation Flags (8 to 15) | | | | | | | |
| +37 | Input Slave Unit Communications Error Flags (8 to 15) | | | | | | | | Input Slave Unit Participation Flags (8 to 15) | | | | | | | |

**Note** Word +0 is assumed to be the first word of the memory allocated for Special I/O Units, i.e., CIO 2000 + (10 × unit number).

**Communications Mode 2**

| Word (See note.) | Bits | | | | | | | | | | | | | | | |
|---|---|---|---|---|---|---|---|---|---|---|---|---|---|---|---|---|
| | 15 | 14 | 13 | 12 | 11 | 10 | 09 | 08 | 07 | 06 | 05 | 04 | 03 | 02 | 01 | 00 |
| +66 | Output Slave Unit Communications Error Flags (0 to 7) | | | | | | | | Output Slave Unit Participation Flags (0 to 7) | | | | | | | |
| +67 | Input Slave Unit Communications Error Flags (0 to 7) | | | | | | | | Input Slave Unit Participation Flags (0 to 7) | | | | | | | |
| +68 | Output Slave Unit Communications Error Flags (8 to 15) | | | | | | | | Output Slave Unit Participation Flags (8 to 15) | | | | | | | |
| +69 | Input Slave Unit Communications Error Flags (8 to 15) | | | | | | | | Input Slave Unit Participation Flags (8 to 15) | | | | | | | |
| +70 | Output Slave Unit Communications Error Flags (16 to 23) | | | | | | | | Output Slave Unit Participation Flags (16 to 23) | | | | | | | |
| +71 | Input Slave Unit Communications Error Flags (16 to 23) | | | | | | | | Input Slave Unit Participation Flags (16 to 23) | | | | | | | |
| +72 | Output Slave Unit Communications Error Flags (24 to 31) | | | | | | | | Output Slave Unit Participation Flags (24 to 31) | | | | | | | |
| +73 | Input Slave Unit Communications Error Flags (24 to 31) | | | | | | | | Input Slave Unit Participation Flags (24 to 31) | | | | | | | |

**Note** Word +0 is assumed to be the first word of the memory allocated for Special I/O Units, i.e., CIO 2000 + (10 × unit number).

**Communications Mode 3**

| Word (See note.) | Bits | | | | | | | | | | | | | | | |
|---|---|---|---|---|---|---|---|---|---|---|---|---|---|---|---|---|
| | 15 | 14 | 13 | 12 | 11 | 10 | 09 | 08 | 07 | 06 | 05 | 04 | 03 | 02 | 01 | 00 |
| +50 | Word Output Slave Unit Communications Error Flags (0 to 7) | | | | | | | | Word Output Slave Unit Participation Flags (0 to 7) | | | | | | | |
| +51 | Word Input Slave Unit Communications Error Flags (0 to 7) | | | | | | | | Word Input Slave Unit Participation Flags (0 to 7) | | | | | | | |
| +52 | Word Output Slave Unit Communications Error Flags (8 to 15) | | | | | | | | Word Output Slave Unit Participation Flags (8 to 15) | | | | | | | |
| +53 | Word Input Slave Unit Communications Error Flags (8 to 15) | | | | | | | | Word Input Slave Unit Participation Flags (8 to 15) | | | | | | | |
| +54 | Bit Output Slave Unit Communications Error Flags (0 to 7) | | | | | | | | Bit Output Slave Unit Participation Flags (0 to 7) | | | | | | | |
| +55 | Bit Input Slave Unit Communications Error Flags (0 to 7) | | | | | | | | Bit Input Slave Unit Participation Flags (0 to 7) | | | | | | | |
| +56 | Bit Output Slave Unit Communications Error Flags (8 to 15) | | | | | | | | Bit Output Slave Unit Participation Flags (8 to 15) | | | | | | | |
| +57 | Bit Input Slave Unit Communications Error Flags (8 to 15) | | | | | | | | Bit Input Slave Unit Participation Flags (8 to 15) | | | | | | | |
| +58 | Bit Output Slave Unit Communications Error Flags (16 to 23) | | | | | | | | Bit Output Slave Unit Participation Flags (16 to 23) | | | | | | | |

| Word (See note.) | Bits | | | | | | | | | | | | | | | |
|---|---|---|---|---|---|---|---|---|---|---|---|---|---|---|---|---|
| | 15 | 14 | 13 | 12 | 11 | 10 | 09 | 08 | 07 | 06 | 05 | 04 | 03 | 02 | 01 | 00 |
| +59 | Bit Input Slave Unit Communications Error Flags (16 to 23) | | | | | | | | Bit Input Slave Unit Participation Flags (16 to 23) | | | | | | | |
| +60 | Bit Output Slave Unit Communications Error Flags (24 to 31) | | | | | | | | Bit Output Slave Unit Participation Flags (24 to 31) | | | | | | | |
| +61 | Bit Input Slave Unit Communications Error Flags (24 to 31) | | | | | | | | Bit Input Slave Unit Participation Flags (24 to 31) | | | | | | | |
| +62 | Bit Output Slave Unit Communications Error Flags (32 to 39) | | | | | | | | Bit Output Slave Unit Participation Flags (32 to 39) | | | | | | | |
| +63 | Bit Input Slave Unit Communications Error Flags (32 to 39) | | | | | | | | Bit Input Slave Unit Participation Flags (32 to 39) | | | | | | | |
| +64 | Bit Output Slave Unit Communications Error Flags (40 to 47) | | | | | | | | Bit Output Slave Unit Participation Flags (40 to 47) | | | | | | | |
| +65 | Bit Input Slave Unit Communications Error Flags (40 to 47) | | | | | | | | Bit Input Slave Unit Participation Flags (40 to 47) | | | | | | | |
| +66 | Bit Output Slave Unit Communications Error Flags (48 to 55) | | | | | | | | Bit Output Slave Unit Participation Flags (48 to 55) | | | | | | | |
| +67 | Bit Input Slave Unit Communications Error Flags (48 to 55) | | | | | | | | Bit Input Slave Unit Participation Flags (48 to 55) | | | | | | | |
| +68 | Bit Output Slave Unit Communications Error Flags (56 to 63) | | | | | | | | Bit Output Slave Unit Participation Flags (56 to 63) | | | | | | | |
| +69 | Bit Input Slave Unit Communications Error Flags (56 to 63) | | | | | | | | Bit Input Slave Unit Participation Flags (56 to 63) | | | | | | | |

**Note** Word +0 is assumed to be the first word of the memory allocated for Special I/O Units, i.e., CIO 2000 + (10 × unit number).

### Communications Mode 8

#### ■ Word Slave Participation Flags and Communications Error Flags

| Word (See note.) | Bit | | | | | | | | | | | | | | | |
|---|---|---|---|---|---|---|---|---|---|---|---|---|---|---|---|---|
| | 15 | 14 | 13 | 12 | 11 | 10 | 09 | 08 | 07 | 06 | 05 | 04 | 03 | 02 | 01 | 00 |
| +0 | Word Output Slave Unit Communications Error Flags (0 to 7) | | | | | | | | Word Output Slave Unit Participation Flags (0 to 7) | | | | | | | |
| +1 | Word Input Slave Unit Communications Error Flags (0 to 7) | | | | | | | | Word Input Slave Unit Participation Flags (0 to 7) | | | | | | | |
| +2 | Word Output Slave Unit Communications Error Flags (8 to 15) | | | | | | | | Word Output Slave Unit Participation Flags (8 to 15) | | | | | | | |
| +3 | Word Input Slave Unit Communications Error Flags (8 to 15) | | | | | | | | Word Input Slave Unit Participation Flags (8 to 15) | | | | | | | |
| +4 | Word Output Slave Unit Communications Error Flags (16 to 23) | | | | | | | | Word Output Slave Unit Participation Flags (16 to 23) | | | | | | | |
| +5 | Word Input Slave Unit Communications Error Flags (16 to 23) | | | | | | | | Word Input Slave Unit Participation Flags (16 to 23) | | | | | | | |
| +6 | Word Output Slave Unit Communications Error Flags (24 to 31) | | | | | | | | Word Output Slave Unit Participation Flags (24 to 31) | | | | | | | |
| +7 | Word Input Slave Unit Communications Error Flags (24 to 31) | | | | | | | | Word Input Slave Unit Participation Flags (24 to 31) | | | | | | | |
| +8 | Word Output Slave Unit Communications Error Flags (32 to 39) | | | | | | | | Word Output Slave Unit Participation Flags (32 to 39) | | | | | | | |
| +9 | Word Input Slave Unit Communications Error Flags (32 to 39) | | | | | | | | Word Input Slave Unit Participation Flags (32 to 39) | | | | | | | |
| +10 | Word Output Slave Unit Communications Error Flags (40 to 47) | | | | | | | | Word Output Slave Unit Participation Flags (40 to 47) | | | | | | | |
| +11 | Word Input Slave Unit Communications Error Flags (40 to 47) | | | | | | | | Word Input Slave Unit Participation Flags (40 to 47) | | | | | | | |
| +12 | Word Output Slave Unit Communications Error Flags (48 to 55) | | | | | | | | Word Output Slave Unit Participation Flags (48 to 55) | | | | | | | |
| +13 | Word Input Slave Unit Communications Error Flags (48 to 55) | | | | | | | | Word Input Slave Unit Participation Flags (48 to 55) | | | | | | | |
| +14 | Word Output Slave Unit Communications Error Flags (56 to 63) | | | | | | | | Word Output Slave Unit Participation Flags (56 to 63) | | | | | | | |
| +15 | Word Input Slave Unit Communications Error Flags (56 to 63) | | | | | | | | Word Input Slave Unit Participation Flags (56 to 63) | | | | | | | |

**Note** Word +0 is assumed to be the first address set under Status on the Master I/O Allocation Tab Page in the software setting by the CX-Integrator.

### ■ Bit Slave Participation Flags and Communications Error Flags

| Word (See note.) | Bit | | | | | | | | | | | | | | | |
|---|---|---|---|---|---|---|---|---|---|---|---|---|---|---|---|---|
| | 15 | 14 | 13 | 12 | 11 | 10 | 09 | 08 | 07 | 06 | 05 | 04 | 03 | 02 | 01 | 00 |
| +0 | Bit Output Slave Unit Communications Error Flags (0 to 7) | | | | | | | | Bit Output Slave Unit Participation Flags (0 to 7) | | | | | | | |
| +1 | Bit Input Slave Unit Communications Error Flags (0 to 7) | | | | | | | | Bit Input Slave Unit Participation Flags (0 to 7) | | | | | | | |
| +2 | Bit Output Slave Unit Communications Error Flags (8 to 15) | | | | | | | | Bit Output Slave Unit Participation Flags (8 to 15) | | | | | | | |
| +3 | Bit Input Slave Unit Communications Error Flags (8 to 15) | | | | | | | | Bit Input Slave Unit Participation Flags (8 to 15) | | | | | | | |
| +4 | Bit Output Slave Unit Communications Error Flags (16 to 23) | | | | | | | | Bit Output Slave Unit Participation Flags (16 to 23) | | | | | | | |
| +5 | Bit Input Slave Unit Communications Error Flags (16 to 23) | | | | | | | | Bit Input Slave Unit Participation Flags (16 to 23) | | | | | | | |
| +6 | Bit Output Slave Unit Communications Error Flags (24 to 31) | | | | | | | | Bit Output Slave Unit Participation Flags (24 to 31) | | | | | | | |
| +7 | Bit Input Slave Unit Communications Error Flags (24 to 31) | | | | | | | | Bit Input Slave Unit Participation Flags (24 to 31) | | | | | | | |
| +8 | Bit Output Slave Unit Communications Error Flags (32 to 39) | | | | | | | | Bit Output Slave Unit Participation Flags (32 to 39) | | | | | | | |
| +9 | Bit Input Slave Unit Communications Error Flags (32 to 39) | | | | | | | | Bit Input Slave Unit Participation Flags (32 to 39) | | | | | | | |
| +10 | Bit Output Slave Unit Communications Error Flags (40 to 47) | | | | | | | | Bit Output Slave Unit Participation Flags (40 to 47) | | | | | | | |
| +11 | Bit Input Slave Unit Communications Error Flags (40 to 47) | | | | | | | | Bit Input Slave Unit Participation Flags (40 to 47) | | | | | | | |
| +12 | Bit Output Slave Unit Communications Error Flags (48 to 55) | | | | | | | | Bit Output Slave Unit Participation Flags (48 to 55) | | | | | | | |
| +13 | Bit Input Slave Unit Communications Error Flags (48 to 55) | | | | | | | | Bit Input Slave Unit Participation Flags (48 to 55) | | | | | | | |
| +14 | Bit Output Slave Unit Communications Error Flags (56 to 63) | | | | | | | | Bit Output Slave Unit Participation Flags (56 to 63) | | | | | | | |
| +15 | Bit Input Slave Unit Communications Error Flags (56 to 63) | | | | | | | | Bit Input Slave Unit Participation Flags (56 to 63) | | | | | | | |
| +16 | Bit Output Slave Unit Communications Error Flags (64 to 71) | | | | | | | | Bit Output Slave Unit Participation Flags (64 to 71) | | | | | | | |
| +17 | Bit Input Slave Unit Communications Error Flags (64 to 71) | | | | | | | | Bit Input Slave Unit Participation Flags (64 to 71) | | | | | | | |
| +18 | Bit Output Slave Unit Communications Error Flags (72 to 79) | | | | | | | | Bit Output Slave Unit Participation Flags (72 to 79) | | | | | | | |
| +19 | Bit Input Slave Unit Communications Error Flags (72 to 79) | | | | | | | | Bit Input Slave Unit Participation Flags (72 to 79) | | | | | | | |
| +20 | Bit Output Slave Unit Communications Error Flags (80 to 87) | | | | | | | | Bit Output Slave Unit Participation Flags (80 to 87) | | | | | | | |
| +21 | Bit Input Slave Unit Communications Error Flags (80 to 87) | | | | | | | | Bit Input Slave Unit Participation Flags (80 to 87) | | | | | | | |
| +22 | Bit Output Slave Unit Communications Error Flags (88 to 95) | | | | | | | | Bit Output Slave Unit Participation Flags (88 to 95) | | | | | | | |
| +23 | Bit Input Slave Unit Communications Error Flags (88 to 95) | | | | | | | | Bit Input Slave Unit Participation Flags (88 to 95) | | | | | | | |
| +24 | Bit Output Slave Unit Communications Error Flags (96 to 103) | | | | | | | | Bit Output Slave Unit Participation Flags (96 to 103) | | | | | | | |
| +25 | Bit Input Slave Unit Communications Error Flags (96 to 103) | | | | | | | | Bit Input Slave Unit Participation Flags (96 to 103) | | | | | | | |

| Word (See note.) | Bit | | | | | | | | | | | | | | | |
|---|---|---|---|---|---|---|---|---|---|---|---|---|---|---|---|---|
| | 15 | 14 | 13 | 12 | 11 | 10 | 09 | 08 | 07 | 06 | 05 | 04 | 03 | 02 | 01 | 00 |
| +26 | Bit Output Slave Unit Communications Error Flags (104 to 111) | | | | | | | | Bit Output Slave Unit Participation Flags (104 to 111) | | | | | | | |
| +27 | Bit Input Slave Unit Communications Error Flags (104 to 111) | | | | | | | | Bit Input Slave Unit Participation Flags (104 to 111) | | | | | | | |
| +28 | Bit Output Slave Unit Communications Error Flags (112 to 119) | | | | | | | | Bit Output Slave Unit Participation Flags (112 to 119) | | | | | | | |
| +29 | Bit Input Slave Unit Communications Error Flags (112 to 119) | | | | | | | | Bit Input Slave Unit Participation Flags (112 to 119) | | | | | | | |
| +30 | Bit Output Slave Unit Communications Error Flags (120 to 127) | | | | | | | | Bit Output Slave Unit Participation Flags (120 to 127) | | | | | | | |
| +31 | Bit Input Slave Unit Communications Error Flags (120 to 127) | | | | | | | | Bit Input Slave Unit Participation Flags (120 to 127) | | | | | | | |

**Note** Word +0 is assumed to be the first address set under *Bit Status* on the Master I/O Allocation Tab Page in the software setting by the CX-Integrator.

Flag Data Arrangement (Word +0)

| | Bits | | | | | | | | | | | | | | | |
|---|---|---|---|---|---|---|---|---|---|---|---|---|---|---|---|---|
| | 15 | 14 | 13 | 12 | 11 | 10 | 09 | 08 | 07 | 06 | 05 | 04 | 03 | 02 | 01 | 00 |
| Node address | OUT7 | OUT6 | OUT5 | OUT4 | OUT3 | OUT2 | OUT1 | OUT0 | OUT7 | OUT6 | OUT5 | OUT4 | OUT3 | OUT2 | OUT1 | OUT0 |

Participation and Communications Error Flag Allocation when Expansion Units Are Used

Allocations for the combination of a Basic Unit and Expansion Unit are the same as for a Word Slave Unit of the same size. When inputs and outputs are both included by adding an Expansion Unit, the Unit is treated as an Input Unit. Therefore the Participation Flags and Communications Error Flags corresponding to node address bits in the Input Area are used.

The following examples show flag allocations when an Expansion Unit is connected to a Word Slave Unit at node address m (m = 0, 1, 2, etc.).

**Example 1: Basic Unit (16 Inputs) + Expansion Unit (16 Inputs)**

Flags for input node m are allocated.

For a Basic Unit (16 inputs) and an Expansion Unit (16 inputs) at node address 0, the flags for IN0 are used.

| | Communications Error Flags | | | | | | | | Participation Flags | | | | | | | |
|---|---|---|---|---|---|---|---|---|---|---|---|---|---|---|---|---|
| Word | Bits | | | | | | | | | | | | | | | |
| | 15 | 14 | 13 | 12 | 11 | 10 | 09 | 08 | 07 | 06 | 05 | 04 | 03 | 02 | 01 | 00 |
| +0 | | | | | | | | | | | | | | | | |
| +1 | | | | | | | | IN0 | | | | | | | | IN0 |
| +2 | | | | | | | | | | | | | | | | |

**Example 2: Basic Unit (16 Inputs) + Expansion Unit (16 Outputs)**

Flags for input node m are allocated.

For a Basic Unit (16 inputs) and an Expansion Unit (16 outputs) at node address 0, the flags for IN0 are used.

| Word address | Bits | | | | | | | | | | | | | | | |
|---|---|---|---|---|---|---|---|---|---|---|---|---|---|---|---|---|
| | 15 | 14 | 13 | 12 | 11 | 10 | 09 | 08 | 07 | 06 | 05 | 04 | 03 | 02 | 01 | 00 |
| +0 | | | | | | | | | | | | | | | | |

| Word address | Bits | | | | | | | | | | | | | | | |
|---|---|---|---|---|---|---|---|---|---|---|---|---|---|---|---|---|
| | 15 | 14 | 13 | 12 | 11 | 10 | 09 | 08 | 07 | 06 | 05 | 04 | 03 | 02 | 01 | 00 |
| +1 | | | | | | | | IN0 | | | | | | | | IN0 |
| +2 | | | | | | | | | | | | | | | | |

**Example 3: Basic Unit (16 Outputs) + Expansion Unit (16 Inputs)**

The Unit is treated the same as a Contact I/O Unit. With Contact I/O Units, only the flags for the input node are allocated. Therefore, in this case as well, only the flags for input node m are allocated.

For a Basic Unit (16 outputs) and an Expansion Unit (16 inputs) at node address 0, the flags for IN0 are used.

| Word address | Bits | | | | | | | | | | | | | | | |
|---|---|---|---|---|---|---|---|---|---|---|---|---|---|---|---|---|
| | 15 | 14 | 13 | 12 | 11 | 10 | 09 | 08 | 07 | 06 | 05 | 04 | 03 | 02 | 01 | 00 |
| +0 | | | | | | | | | | | | | | | | |
| +1 | | | | | | | | IN0 | | | | | | | | IN0 |
| +2 | | | | | | | | | | | | | | | | |

**Example 4: Basic Unit (16 Outputs) + Expansion Unit (16 Outputs)**

Flags for output node m are allocated.

For a Basic Unit (16 outputs) and an Expansion Unit (16 outputs) at node address 0, the flags for OUT0 are used.

| Word address | Bits | | | | | | | | | | | | | | | |
|---|---|---|---|---|---|---|---|---|---|---|---|---|---|---|---|---|
| | 15 | 14 | 13 | 12 | 11 | 10 | 09 | 08 | 07 | 06 | 05 | 04 | 03 | 02 | 01 | 00 |
| +0 | | | | | | | | OUT0 | | | | | | | | OUT0 |
| +1 | | | | | | | | | | | | | | | | |
| +2 | | | | | | | | | | | | | | | | |

# 5-3 Remote I/O Communications Performance

This section describes the performance of remote I/O communications in a CompoNet Network.

## 5-3-1 I/O Response Time

This section describes the minimum and maximum I/O response times in a CompoNet Network.

The I/O response time is the time required for an input signal from an Input Slave Unit to be processed by the Master Unit PLC until it is output to an Output Slave Unit.

## Maximum I/O Response Time

### Word Slave Units

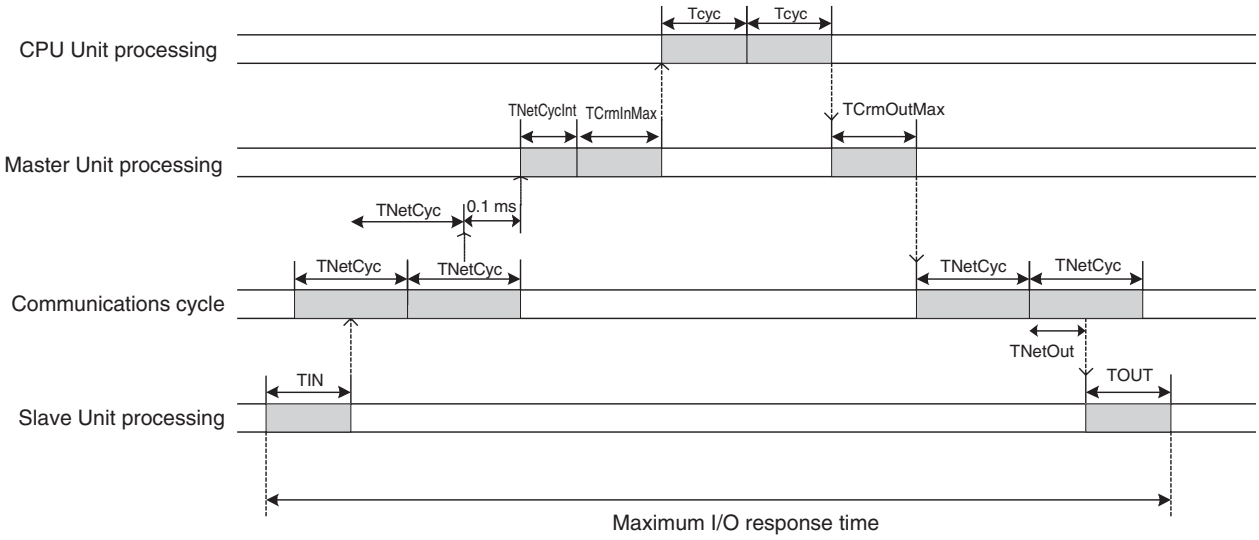


■ **Formula for the Maximum I/O Response Time for a Word Slave Unit**

TIN + TNetCyc×2 + 0.1ms + TNetCycInt + TCrmInMax + Tcyc×2 + TCrmOutMax + TNetOut + TOUT

| | |
|---|---|
| TIN: | Input Slave Unit input delay time |
| TNetCyc: | Communications cycle time |
| TNetCycInt: | Interrupt processing time |
| TCrmInMax: | Maximum input processing time at Master Unit |
| Tcyc: | CPU Unit cycle time |
| TCrmOutMax: | Maximum output processing time at Master Unit |
| TNetOut: | Time allotted for output frames in communications cycle time |
| TOUT: | Output Slave Unit output delay time |

- Input Slave Unit input delay time
  For details on delay times for individual Slave Units, refer to the input specifications for individual Slave Units in the *CompoNet Slave Unit Operation Manual* (Cat. No. W457).
- TNetCyc: Communications Cycle Time

| Baud rate / Communications mode | Maximum I/O | 4.0 Mbit/s | 3.0 Mbit/s | 1.5 Mbit/s | 93.75 kbit/s |
|---|---|---|---|---|---|
| Communications mode 0 | 128 input words, 128 output words | 0.9 ms (0.7 ms) | 0.9 ms (0.7 ms) | 1.5 ms (1.1 ms) | 19.8 ms (12.5 ms) |
| Communications mode 1 | 256 input words, 256 output words | 1.0 ms (0.8 ms) | 1.2 ms (1.0 ms) | 2.3 ms (1.9 ms) | 30.2 ms (22.8 ms) |
| Communications mode 2 | 512 input words, 512 output words | 1.3 ms (1.0 ms) | 1.7 ms (1.5 ms) | 4.0 ms (3.5 ms) | 51.3 ms (44.0 ms) |

| Baud rate / Communications mode | Maximum I/O | 4.0 Mbit/s | 3.0 Mbit/s | 1.5 Mbit/s | 93.75 kbit/s |
|---|---|---|---|---|---|
| Communications mode 3 | 256 input words, 256 output words + 128 bit inputs, 128 bit outputs | 2.0 ms (1.8 ms) | 2.5 ms (2.3 ms) | 5.9 ms (5.5 ms) | 72.1 ms (65.7 ms) |
| Communications mode 8 | 1,024 input words, 1,024 output words + 256 input bits, 256 output bits<br>**Note** The number of connectable nodes is 128 for Word Slave Units (64 input and 64 output) and 256 for Bit Slave Units (128 bit input and 128 bit output). | 0.79 ms + G (0.64 ms + G) (See note.) | 0.85 ms + G (0.64 ms + G) (See note.) | 1.94 ms + G (1.52 ms + G) (See note.) | 24.81 ms + G (17.74 ms + G) (See note.) |

The figures in parentheses are when message communications are not used.

**Note** Communications Mode 8
G = (Number of Word Output Slave Units connected × additional time per Word Output Slave Unit)
+ (Number of Word Input Slave Units × additional time per Word Input Slave Unit)
+ (Number of Bit Output Slave Units × additional time per Bit Output Slave Unit)
+ (Number of Bit Input Slave Units × additional time per Bit Input Slave Unit)

Additional Time Per Unit by Slave Unit Type

| Baud rate / Slave Unit type | 4.0 Mbit/s | 3.0 Mbit/s | 1.5 Mbit/s | 93.75 kbit/s |
|---|---|---|---|---|
| Word Output Unit | 5.31 µs | 5.78 µs | 11.02 µs | 171.48 µs |
| Word Input Unit | 15.55 µs | 22.42 µs | 53.44 µs | 667.58 µs |
| Bit Output Unit | 0.66 µs | 0.74 µs | 1.33 µs | 21.60 µs |
| Bit Input Unit | 14.49 µs | 19.18 µs | 45.08 µs | 529.18 µs |

G Calculation Example

Conditions

| Baud rate | Word outputs | Word inputs | Bit outputs | Bit inputs |
|---|---|---|---|---|
| 4.0 Mbit/s | 16 Units | 32 Units | 64 Units | 32 Units |

G = (16 × 5.31 µs) + (32 × 15.55 µs) + (64 × 0.66 µs) + (32 × 14.49 µs) ≅ 10.88 ms

- 0.1 ms: Interval for inputting input data
- TNetCycInt: Interrupt processing time

| Baud rate / Communications mode | 4.0 Mbit/s | 3.0 Mbit/s | 1.5 Mbit/s | 93.75 kbit/s |
|---|---|---|---|---|
| Communications mode 0 | 0.40 ms | 0.45 ms | 0.60 ms | 6.90 ms |
| Communications mode 1 | 0.42 ms | 0.48 ms | 0.68 ms | 6.98 ms |
| Communications mode 2 | 0.48 ms | 0.53 ms | 0.82 ms | 7.11 ms |

| Baud rate / Communications mode | 4.0 Mbit/s | 3.0 Mbit/s | 1.5 Mbit/s | 93.75 kbit/s |
|---|---|---|---|---|
| Communications mode 3 | 0.63 ms | 0.69 ms | 0.98 ms | 7.28 ms |
| Communications mode 8 | 0.37 ms + H (See note.) | 0.43 ms + H (See note.) | 0.73 ms + H (See note.) | 7.03 ms + H (See note.) |

**Note** Communications Mode 8
H = (Number of Word Output Slave Units × 0.313 μs) + (Number of Word Input Slave Units × 3.125 μs) + (Number of Bit Output Slave Units × 0.078 μs) + (Number of Bit Input Slave Units × 3.125 μs)

H Calculation Example

Conditions

| Baud rate | Word outputs | Word inputs | Bit outputs | Bit inputs |
|---|---|---|---|---|
| --- | 32 nodes | 64 nodes | 48 nodes | 16 nodes |

H = (32 × 0.313 μs) + (64 × 3.125 μs) + (48 × 0.078 μs) + (16 × 3.125 μs) ≅ 0.264 ms

- TCrmInMax: Maximum input processing time at Master Unit

| Baud rate / Communications mode | 4.0 Mbit/s | 3.0 Mbit/s | 1.5 Mbit/s | 93.75 kbit/s |
|---|---|---|---|---|
| Communications mode 0 | 0.3 ms | 0.28 ms | 0.26 ms | 0.22 ms |
| Communications mode 1 | 0.31 ms | 0.29 ms | 0.27 ms | 0.27 ms |
| Communications mode 2 | 0.35 ms | 0.33 ms | 0.37 ms | 0.37 ms |
| Communications mode 3 | 0.34 ms | 0.34 ms | 0.38 ms | 0.38 ms |
| Communications mode 8 | 0.29 ms + I (See note.) | 0.29 ms + I (See note.) | 0.33 ms + I (See note.) | 0.35 ms + I (See note.) |

**Note** Communications Mode 8
I = (Number of Word Input Slave Units × 0.625 μs) + [(Number of Word Output Slave Units or Word Input Slave Units, whichever is greater) + (Number of Bit Output Slave Units or Bit Input Slave Units, whichever is greater) × 0.5 μs]

I Calculation Example

Conditions

| Baud rate | Word outputs | Word inputs | Bit outputs | Bit inputs |
|---|---|---|---|---|
| --- | 48 nodes | 32 nodes | 64 nodes | 128 nodes |

I = (32 × 0.625 μs) + {(48 + 128) × 0.5 μs} = 0.108 ms

- Tcyc: CPU Unit cycle time
- TCrmOutMax: Maximum output processing time at Master Unit

| Communications mode 0 | Communications mode 1 | Communications mode 2 | Communications mode 3 | Communications mode 8 |
|---|---|---|---|---|
| 0.086 ms | 0.090 ms | 0.098 ms | 0.094 ms | 0.082 ms + J (See note.) |

**Note** Communications Mode 8
J = (Number of Word Output Slave Units × 0.5 μs) + (Number of Bit Output Slave Units × 0.0625 μs)

J Calculation Example

Conditions

| Baud rate | Word outputs | Word inputs | Bit outputs | Bit inputs |
|---|---|---|---|---|
| --- | 16 nodes | 48 nodes | 8 nodes | 8 nodes |

J = (16 × 0.5 μs) + (8 × 0.0625 μs) ≅ 0.009 ms

- TNetOut: Time allotted for output frames in communications cycle time

| Baud rate / Communications mode | Maximum I/O | 4.0 Mbit/s | 3.0 Mbit/s | 1.5 Mbit/s | 93.75 kbit/s |
|---|---|---|---|---|---|
| Communications mode 0 | 128 input words, 128 output words | 0.046 ms | 0.060 ms | 0.121 ms | 1.936 ms |
| Communications mode 1 | 256 input words, 256 output words | 0.078 ms | 0.103 ms | 0.206 ms | 3.305 ms |
| Communications mode 2 | 512 input words, 512 output words | 0.142 ms | 0.188 ms | 0.377 ms | 6.048 ms |
| Communications mode 3 | 256 input words, 256 output bits + 128 input bits, 128 bit outputs | 0.110 ms | 0.146 ms | 0.291 ms | 4.674 ms |
| Communications mode 8 | 1,024 input words, 1,024 output words + 256 bit inputs, 256 bit outputs<br>**Note** The number of connectable nodes is 128 for Word Slave Units (64 input and 64 output) and 256 for Bit Slave Units (128 bit input and 128 bit output). | 0.13 ms + K (See note.) | 0.018 ms + K (See note.) | 0.035 ms + K (See note.) | 0.567 ms + K (See note.) |

**Note** Communications Mode 8
K = (Number of Word Output Slave Units connected x additional time per Word Output Slave Unit) + [(Number of Bit Output Slave Units +7) ÷ 8] × additional time per 8 Bit Output Slave Units)

Additional time per Word Output Slave Unit / Additional time per 8 Bit Output Slave Units

| Baud rate / Communications mode | 4.0 Mbit/s | 3.0 Mbit/s | 1.5 Mbit/s | 93.75 kbit/s |
|---|---|---|---|---|
| Word Output | 4.0 μs | 5.312 μs | 10.656 μs | 171.104 μs |
| Bit Output | 4.0 μs | 5.312 μs | 10.656 μs | 171.104 μs |

K Calculation Example

Conditions

| Baud rate | Word outputs | Word inputs | Bit outputs | Bit inputs |
|---|---|---|---|---|
| 3.0 Mbit/s | 7 Units | 8 Units | 9 Units | 10 Units |

K = (7 × 5.312 μs) + (2 × 5.312 μs) ≅ 0.048 ms

- TOUT: Output Slave Unit output delay time
For details on delay times for individual Slave Units, refer to the output specifications for individual Slave Units in the *CompoNet Slave Unit Operation Manual* (Cat. No. W457).

### ■ Reference Example

The following table shows the calculation results for the maximum I/O response time for a Word Slave Unit with the maximum number of nodes and a CPU Unit cycle time of 1 ms.

| Communications mode | Number of nodes connected | Word Slave Unit max. I/O response time (ms) | | | |
|---|---|---|---|---|---|
| | | 4.0 Mbit/s | 3.0 Mbit/s | 1.5 Mbit/s | 93.75 kbit/s |
| Communications mode 0 | 16 word nodes (8 input, 8 output) | 7.7 | 7.8 | 9.2 | 53.8 |
| Communications mode 1 | 32 word nodes (16 input, 16 output) | 8.0 | 8.5 | 10.9 | 76.1 |
| Communications mode 2 | 64 word nodes (32 input, 32 output) | 8.8 | 9.6 | 14.8 | 121.3 |
| Communications mode 3 | 32 word nodes (16 input, 16 output) 128 bit nodes (64 bit input, 64 bit output) | 10.3 | 11.4 | 18.6 | 161.7 |
| Communications mode 8 | 128 word nodes (64 input, 64 output) 256 bit nodes (128 bit input, 128 bit output) | 16.7 | 19.3 | 35.8 | 374.9 |

(With message communications)

**Bit Slave Units**

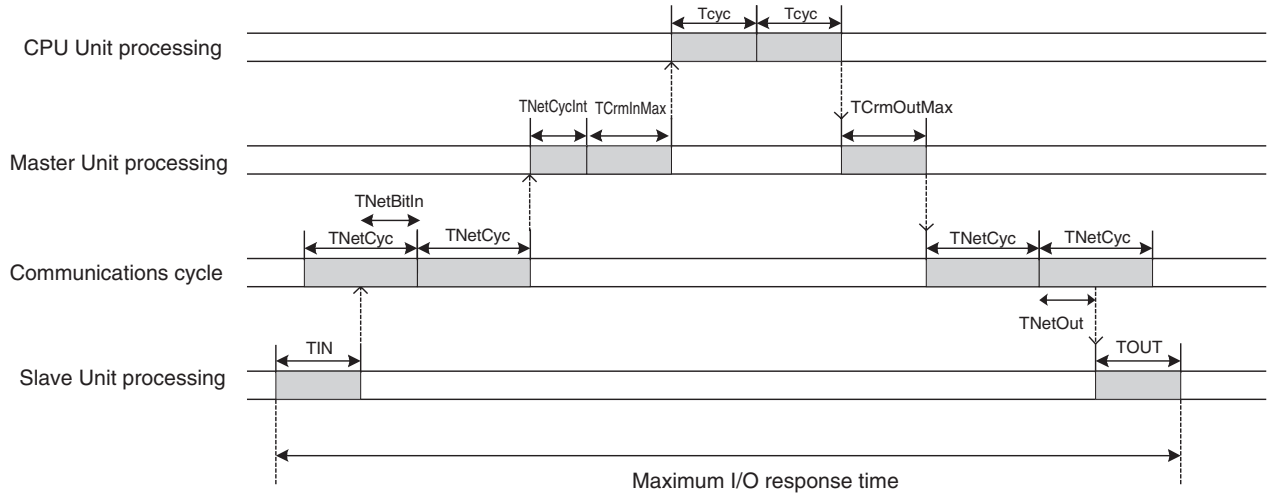


### ■ Formula for the Maximum I/O Response Time for a Bit Slave Unit

$$TIN + TNetCyc \times 2 + TNetBitIn + TNetCycInt + TCrmInMax + Tcyc \times 2 + TCrmOutMax + TNetOut + TOUT$$

TIN: Input Slave Unit input delay time
TNetCyc: Communications cycle time
TNetBitIn: Time allotted for bit input frames in communications cycle time
TNetCycInt: Interrupt processing time
TCrmInMax: Maximum input processing time at Master Unit
Tcyc: CPU Unit cycle time
TCrmOutMax: Maximum output processing time at Master Unit
TNetOut: Time allotted for output frames in communications cycle time
TOUT: Output Slave Unit output delay time

- TIN: Input Slave Unit input delay time
  For details on input delay times for individual Slave Units, refer to the input specifications for individual Slave Units in the *CompoNet Slave Unit Operation Manual* (Cat. No. W457).
- TNetBitIn: Time allotted for bit Input frames in communications cycle time

| Baud rate / Communications mode | Maximum I/O | 4.0 Mbit/s | 3.0 Mbit/s | 1.5 Mbit/s | 93.75 kbit/s |
|---|---|---|---|---|---|
| Communications mode 3 | 256 input words, 256 output words + 128 bit inputs, 128 bit outputs | 0.809 ms | 1.075 ms | 2.322 ms | 32.959 ms |
| Communications mode 8 | 1,024 input words, 1,024 output words + 256 bit inputs, 256 bit outputs | 0.013 ms × (Number of Bit Input Slave Units) | 0.018 ms × (Number of Bit Input Slave Units) | 0.038 ms × (Number of Bit Input Slave Units) | 0.530 ms × (Number of Bit Input Slave Units) |

- TCrmInMax: Maximum input processing time at Master Unit

| Baud rate / Communications mode | 4.0 Mbit/s | 3.0 Mbit/s | 1.5 Mbit/s | 93.75 kbit/s |
|---|---|---|---|---|
| Communications mode 3 | 0.35 ms | 0.35 ms | 0.39 ms | 0.39 ms |
| Communications mode 8 | 0.25 ms + M (See note.) | 0.27 ms + M (See note.) | 0.33 ms + M (See note.) | 0.35 ms + M (See note.) |

**Note** Communications Mode 8
M = (Number of Word Input Slave Units x 0.625 μs) + [{(Number of Bit Input Slave Units × 7) ÷ 8} × 0.375 μs] + [(Number of Word Output Slave Units or Word Input Slave Units, whichever is greater) + (Number of Bit Output Slave Units and Bit Input Slave Units, whichever is greater) × 0.5 μs]

M Calculation Example

Conditions

| Baud rate | Word outputs | Word inputs | Bit outputs | Bit inputs |
|---|---|---|---|---|
| --- | 8 nodes | 16 nodes | 16 nodes | 8 nodes |

M = (16 × 0.625 μs) + (1 × 0.375 μs) + {(16 + 16) × 0.5 μs} ≅ 0.027 ms

### ■ Reference Example

The following table shows the calculation results for the maximum I/O response time for a Bit Slave Unit with the maximum number of nodes and a CPU Unit cycle time of 1 ms.

| Communications mode | Number of nodes connected | Bit Slave Unit max. I/O response time (ms) | | | |
|---|---|---|---|---|---|
| | | 4.0 Mbit/s | 3.0 Mbit/s | 1.5 Mbit/s | 93.75 kbit/s |
| Communications mode 3 | 32 word nodes (16 input, 16 output)<br>128 bit nodes (64 bit input, 64 bit output) | 11.0 | 12.4 | 20.9 | 194.6 |
| Communications mode 8 | 128 word nodes (64 input, 64 output)<br>256 bit nodes (128 bit input, 128 bit output) | 18.2 | 21.5 | 40.6 | 442.6 |

(With message communications)

## Minimum I/O Response Time

### Word Slave Units

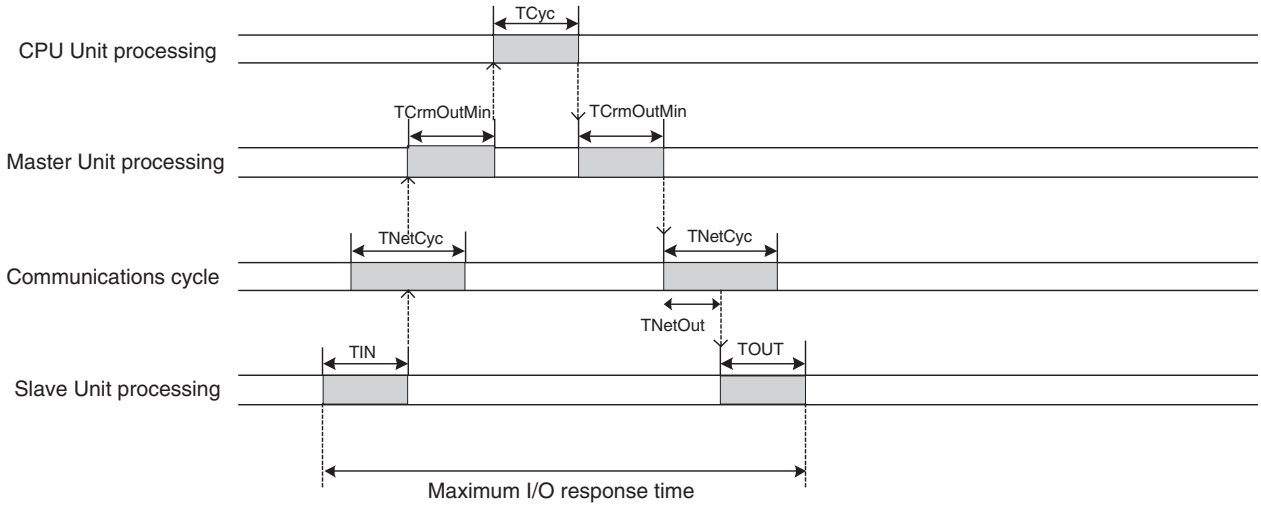


#### ■ Formula for Word Slave Minimum I/O Response Time

TIN + TCrmInMin + Tcyc + TCrmOutMin + TNetOut + TOUT

| | |
|---|---|
| TIN: | Input Slave Unit input delay time |
| TCrmInMin: | Minimum input processing time at Master Unit |
| Tcyc: | CPU Unit cycle time |
| TCrmOutMin: | Minimum output processing time at Master Unit |
| TNetOut: | Time allotted for output frames in communications cycle time |
| TOUT: | Output Slave Unit output delay time |

- TCrmOutMin: Minimum output processing time at Master Unit

| Communications mode 0 | Communications mode 1 | Communications mode 2 | Communications mode 3 | Communications mode 8 |
|---|---|---|---|---|
| 0.05 ms | 0.055 ms | 0.06 ms | 0.06 ms | 0.045 ms + N (See note.) |

**Note** Communications Mode 8
N = (Number of Word Output Slave Units × 0.5 μs) + (Number of Bit Output Slave Units × 0.0625 μs)

N Calculation Example

Conditions

| Baud rate | Word outputs | Word inputs | Bit outputs | Bit inputs |
|---|---|---|---|---|
| --- | 48 nodes | 32 nodes | 16 nodes | 8 nodes |

N = (48 × 0.5 μs) + (16 × 0.0625 μs) = 0.025 ms

- TCrmInMin: Minimum input processing time at Master Unit

| Communications mode 0 | Communications mode 1 | Communications mode 2 | Communications mode 3 | Communications mode 8 |
|---|---|---|---|---|
| 0.023 ms | 0.025 ms | 0.029 ms | 0.025 ms | 0.021 ms + O (See note.) |

**Note** Communications Mode 8
O = (Number of Word Input Slave Units × 0.25 μs)

O Calculation Example

Conditions

| Baud rate | Word outputs | Word inputs | Bit outputs | Bit inputs |
|---|---|---|---|---|
| --- | 8 nodes | 16 nodes | 32 nodes | 48 nodes |

O = 16 × 0.25 μs = 0.004 ms

### ■ Reference Example

The following table shows the calculation results for the minimum I/O response time for a Word Slave Unit with the maximum number of nodes and a CPU Unit cycle time of 1 ms.

| Communications mode | Number of nodes connected | Word Slave Unit max. I/O response time (ms) | | | |
|---|---|---|---|---|---|
| | | 4.0 Mbit/s | 3.0 Mbit/s | 1.5 Mbit/s | 93.75 kbit/s |
| Communications mode 0 | 16 word nodes (8 input, 8 output) | 4.2 | 4.2 | 4.2 | 6.0 |
| Communications mode 1 | 32 word nodes (16 input, 16 output) | 4.2 | 4.2 | 4.3 | 7.4 |
| Communications mode 2 | 64 word nodes (32 input, 32 output) | 4.3 | 4.3 | 4.7 | 10.2 |
| Communications mode 3 | 32 word nodes (16 input, 16 output)<br>128 bit nodes (64 bit input, 64 bit output) | 4.2 | 4.3 | 4.4 | 8.8 |
| Communications mode 8 | 128 word nodes (64 input, 64 output)<br>256 bit nodes (128 bit input, 128 bit output) | 4.5 | 4.6 | 5.0 | 18.4 |

**Bit Slave Units**

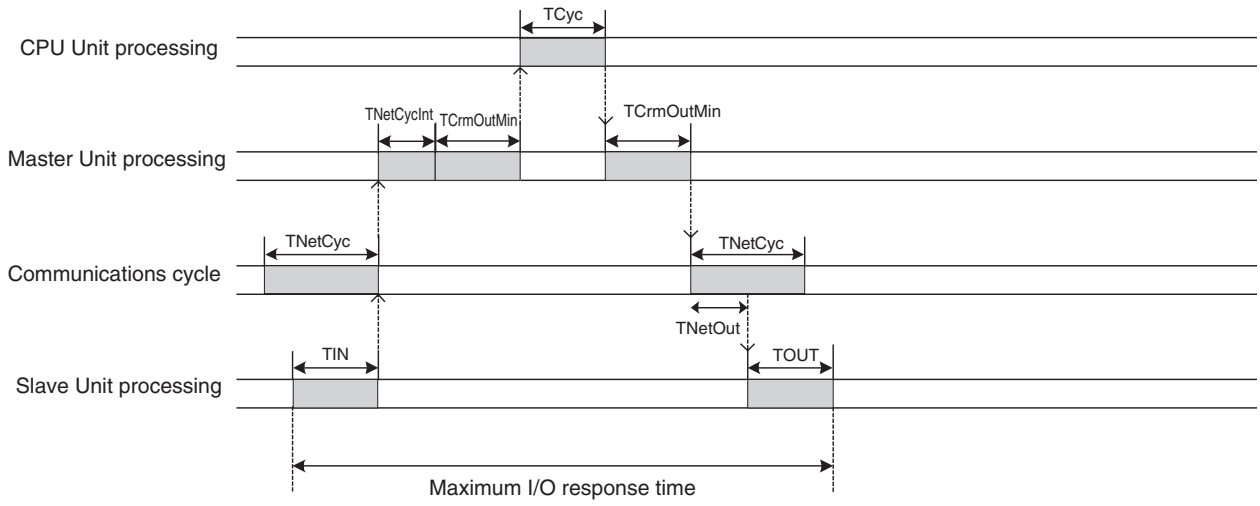


### ■ Formula for the Minimum I/O Response Time for a Bit Slave Unit

TIN + TNetCycInt + TCrmInMin + Tcyc + TCrmOutMin + TNetOut + TOUT

| | |
|---|---|
| TIN: | Input Slave Unit input delay time |
| TNetCycInt: | Interrupt processing time |
| TCrmInMin: | Minimum input processing time at Master Unit |
| Tcyc: | CPU Unit cycle time |
| TCrmOutMin: | Minimum output processing time at Master Unit |
| TNetOut: | Time allotted for output frames in communications cycle time |
| TOUT: | Output Slave Unit output delay time |

- TCrmInMin: Minimum input processing time at Master Unit

| Communications mode 3 | Communications mode 8 |
|---|---|
| 0.093 ms | 0.46 ms + P (See note.) |

**Note** Communications Mode 8
P = (Number of Word Input Slave Units × 0.25 μs) + [{(Number of Bit Input Slave Units × 7) ÷ 8} × 0.375 μs] + [(Number of Word Output Slave Units or Word Input Slave Units, whichever is greater) + (Number of Bit Output Slave Units and Bit Input Slave Units, whichever is greater) × 0.5 μs]

P Calculation Example

Conditions

| Baud rate | Word outputs | Word inputs | Bit outputs | Bit inputs |
|---|---|---|---|---|
| --- | 63 nodes | 64 nodes | 128 nodes | 127 nodes |

P= (64 × 0.25 μs) + (16 × 0.375 μs) + ((64 + 128) × 0.5 μs) = 0.118 ms

■ **Reference Example**

The following table shows the calculation results for the maximum I/O response time for a Bit Slave Unit with the minimum number of nodes and a CPU Unit cycle time of 1 ms.

| Communications mode | Number of nodes connected | Word Slave Unit max. I/O response time (ms) | | | |
|---|---|---|---|---|---|
| | | 4.0 Mbit/s | 3.0 Mbit/s | 1.5 Mbit/s | 93.75 kbit/s |
| Communications mode 3 | 32 word nodes (16 input, 16 output)<br>128 bit nodes (64 bit input, 64 bit output) | 4.9 | 5.0 | 5.5 | 16.2 |
| Communications mode 8 | 128 word nodes (64 input, 64 output)<br>256 bit nodes (128 bit input, 128 bit output) | 5.7 | 5.9 | 6.6 | 26.3 |

## 5-3-2 Effects of Master Units on CPU Unit Cycle Time

CPU Unit cycle time is affected by the number of Master Units mounted and the communications mode that is used (e.g., the number of words allocated for Slave Units in the I/O Memory Area when communications mode 8 is used).

The following tables show the additional time per Master Unit on CPU Unit cycle time for each communications mode.

**CS Series**

| Communications mode / CPU Unit model | Communications mode 0 | Communications mode 1 | Communications mode 2 | Communications mode 3 | Communications mode 8 |
|---|---|---|---|---|---|
| CS1G CPU Unit | 0.244 ms | 0.278 ms | 0.344 ms | 0.367 ms | 0.180 + (0.0024 x number of words allocated) ms |
| CS1G-H CPU Unit | 0.189 ms | 0.211 ms | 0.233 ms | 0.289 ms | 0.135 + (0.0014 x number of words allocated) ms |
| CS1H CPU Unit | 0.200 ms | 0.233 ms | 0.300 ms | 0.311 ms | 0.150 + (0.0022 x number of words allocated) ms |
| CS1H-H CPU Unit | 0.156 ms | 0.167 ms | 0.200 ms | 0.244 ms | 0.105 + (0.0012 x number of words allocated) ms |

**Note** The number of words allocated is number of words actually allocated in the I/O Memory Area for all connected Slave Units.

**CJ Series**

| Communications mode<br>CPU Unit model | Communications mode 0 | Communications mode 1 | Communications mode 2 | Communications mode 3 | Communications mode 8 |
|---|---|---|---|---|---|
| CJ1G CPU Unit | 0.200 ms | 0.256 ms | 0.300 ms | 0.322 ms | 0.154 + (0.0022 × number of words allocated) ms |
| CJ1G-H CPU Unit | 0.189 ms | 0.211 ms | 0.233 ms | 0.289 ms | 0.109 + (0.0014 × number of words allocated) ms |
| CJ1H-H CPU Unit | 0.156 ms | 0.178 ms | 0.189 ms | 0.244 ms | 0.106 + (0.0012 × number of words allocated) ms |
| CJ1M CPU Unit (Low-end model CJ1M-CPU11/CPU21) | 0.256 ms | 0.267 ms | 0.289 ms | 0.367 ms | 0.166 + (0.0016 × number of words allocated) ms |
| CJ1M CPU Unit (Other than low-end model) | 0.233 ms | 0.256 ms | 0.267 ms | 0.322 ms | 0.100 + (0.0016 × number of words allocated) ms |

**Note** The number of words allocated is number of words actually allocated in the I/O Memory Area for all connected Slave Units.

# SECTION 6
# Message Communications

This section describes the message communications that are possible with CompoNet Networks.


6-1 Message Communications . . . . . 152
6-1-1 Overview. . . . . 152
6-1-2 FINS Message Communications . . . . . 152
6-1-3 Explicit Message Communications . . . . . 153
6-1-4 Message Communications Specifications . . . . . 153
6-1-5 Message Monitoring Timer . . . . . 153
6-2 Overview of FINS Commands and Responses . . . . . 154
6-2-1 FINS Communications Service . . . . . 154
6-2-2 Sending and Receiving FINS Commands and Responses . . . . . 154
6-2-3 Units That Can Process FINS Commands and Responses . . . . . 155
6-2-4 FINS Command List. . . . . 155
6-3 Using FINS Message Communications . . . . . 156
6-3-1 Instructions for Sending FINS Commands. . . . . 156
6-3-2 Using CMND(490) . . . . . 157
6-4 Sending Explicit Messages . . . . . 159
6-4-1 Sending Explicit Messages . . . . . 160
6-4-2 Using CMND(490) to Send Explicit Messages . . . . . 162

# 6-1 Message Communications

The message communications function sends and receives data between nodes on a CompoNet Network, i.e., between the PLC's CPU Unit and the Master Unit and between the PLC's CPU Unit and CompoNet Slave Units. Message communications are used to read and write special data, such as time or error history information, and to control operation, e.g., by force-setting/resetting bits. Message communications are performed whenever required, i.e., when the conditions set for their execution are satisfied.

There are two types of message communications: FINS message communications and explicit message communications.

## 6-1-1 Overview

| | FINS message communications | Explicit message communications |
|---|---|---|
| Overview | Message communications developed by OMRON using the FINS protocol | General-purpose message communications using the CompoNet Network protocol |
| Remote devices | OMRON PLCs | CompoNet Slave Units |
| Features | • FINS commands can be sent and received to implement a wider range of services than is possible with explicit messages.<br>• FINS commands provide transparent message communications with nodes on other OMRON networks (Controller Link, SYSMAC LINK, Ethernet, and DeviceNet) across a maximum of three network layers. | • Explicit messages can be received from OMRON PLCs and they can be sent to CompoNet Slave Units. |

## 6-1-2 FINS Message Communications

Messages using FINS commands can be exchanged with CompoNet Master Units that support FINS messages.

CS/CJ-series CompoNet Master Units can freely exchange message communications with nodes on other networks (such as Controller Link, SYSMAC LINK, and Ethernet). Communications are possible across a maximum of three network layers. Routing tables must be registered, however, in the CPU Unit of each PLC on the network, including the local and relay network tables.

CompoNet Master Units are not included in those routing tables.

**FINS communications are possible across a maximum of three layers, with CompoNet Master Units at the ends.**

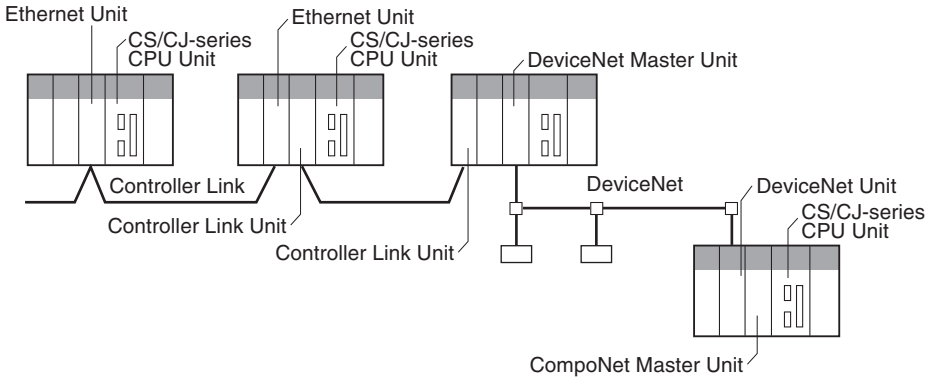

## 6-1-3 Explicit Message Communications

Explicit messages defined by the CompoNet Network are used to send requests for services to CompoNet Slave Units.

Explicit messages are sent using FINS commands (command code 2802).

## 6-1-4 Message Communications Specifications

| Applicable PLC series | | CS/CJ Series |
|---|---|---|
| Unit models | | CS1W-CRM21 and CJ1W-CRM21 |
| Maximum number of nodes per Master Unit for message communications | Explicit messages | 448 |
| Instructions for executing message communications | Any FINS commands | CMND(490) instruction (FINS message sent to CompoNet Master Unit) |
| | CompoNet explicit messages | CMND(490) instruction (FINS message sent to CompoNet Slave Unit) |
| Command transmission sources: Transmission destinations | | 1:1 communications (1:N broadcast communications are not possible.) |
| Communications data length (not including command code) | | CMND(490) instruction: 542 bytes max. |
| Number of instructions executed simultaneously | | One for each of eight ports (ports 0 to 7)<br>**Note** For information on ports (logical ports), refer to the section on instructions for network communications in the CS/CJ-series PLC Instruction Reference Manual (Cat. No. W340) |
| Response monitoring time | | Default setting: 2 s; user setting: 0.1 to 6,553.5 s |
| Number of retries | | 0 to 15 |
| Message monitoring timer (explicit message communications) | | The setting is saved in the CompoNet Master Unit. |

## 6-1-5 Message Monitoring Timer

The message monitoring timer measures the monitoring time for responses made by the CompoNet Master Unit. It is enabled for explicit message communications. The default setting is for 2 s (2,000 ms). Any time from 1 to 65,535 ms can be set.

A longer time must be set if responses from the communications target device (the message transmission destination) are slow. If the set time is too long, however, subsequent messages cannot be sent to the same communications device while waiting for a response to a previous message.

The CompoNet Master Unit monitors message timeouts using this timer. Likewise, monitoring is performed by the CPU Unit according to the response monitoring time for the DELIVER COMMAND (CMND(490)) instructions. It is therefore not effective to lengthen (or shorten) only the message monitoring timer or only the response monitoring time for CMND(490).

Set the response monitoring time for CMND(490) to a value equal to or greater than the time set for the response monitoring timer.

If too many timeouts are occurring, then lengthen the times for both while maintaining the time settings relative to each other.

# 6-2 Overview of FINS Commands and Responses

## 6-2-1 FINS Communications Service

FINS communications uses a communications protocol that was developed by OMRON for its factory automation (FA) control systems.

For information on FINS commands, refer to the CS/CJ-series PLC Communications Command Reference Manual (Cat. No. W342).

## 6-2-2 Sending and Receiving FINS Commands and Responses

FINS commands are sent using CMND(490) for CS/CJ-series PLCs.

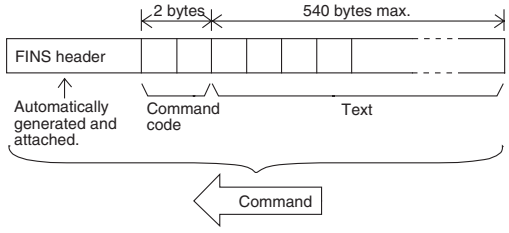


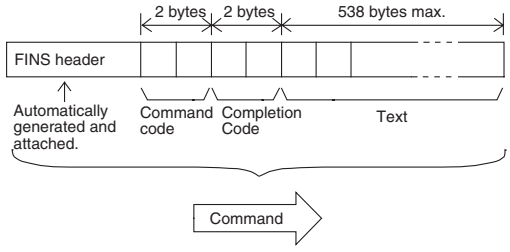


**Command Code**

The command code is a 2-byte code that indicates the contents of the command. A FINS command must begin with a 2-byte command code. If there are parameters, they are included after the command code.

**Completion Code**

The Completion Code is a 2-byte code that indicates the execution results of the command. The main response code (MRES) in the first byte of the Completion Code classifies the execution results, and the sub-response code (SRES) in the next byte provides detailed results.

The following table shows the correspondence between execution results and the MRES. For details on Completion Codes including sub-response codes (SRES) and on error processing, refer to the CS/CJ-series Communications Command Reference Manual (Cat. No. W342).

| MRES | Execution result | MRES | Execution result |
|---|---|---|---|
| 00 | Normal completion | 20 | Read not possible |
| 01 | Local node error | 21 | Write not possible |
| 02 | Remote node error | 22 | Operating mode error |
| 03 | Controller error | 23 | No such Unit |
| 04 | Unsupported setting error (service not supported) | 24 | Start/stop not possible |
| 05 | Routing error | 25 | Unit error |
| 10 | Command format error | 26 | Command error |
| 11 | Parameter error | 30 | Access control error |
| | | 40 | Service aborted |

## 6-2-3 Units That Can Process FINS Commands and Responses

The number of parameters and types of FINS commands that are supported depend on the Unit directly processing the command. For details on commands and responses to CompoNet Master Units, refer to the Appendix FINS Commands Addressed to CompoNet Master Units and Responses.

For information on commands and responses to CS/CJ-series CPU Units, refer to the CS/CJ Series Communications Command Reference Manual (Cat. No. W342).

## 6-2-4 FINS Command List

**Commands Addressed to CompoNet Master Units**

| Command | Command code |
|---|---|
| START I/O COMMUNICATIONS | 04 01 |
| RESET UNIT | 04 03 |
| READ CONTROLLER DATA | 05 01 |
| ECHOBACK TEST | 08 01 |
| READ ERROR LOG | 21 02 |
| CLEAR ERROR LOG | 21 03 |

**CompoNet SEND EXPLICIT MESSAGE Command**

| Command | Command code |
|---|---|
| SEND EXPLICIT MESSAGE | 28 02 |

# 6-3 Using FINS Message Communications

Execute CMND(490) to send a FINS command.

## 6-3-1 Instructions for Sending FINS Commands

**CMND(490)**

Control operations, such as reading or writing I/O memory data at another node, reading status information, and changing operating modes, can be performed by executing CMND(490) in the user program in a CS/CJ-series CPU Unit to send a FINS command.

Command data (n bytes) is sent from local node S to address N. The response data (m bytes) is stored from local node address D onwards.

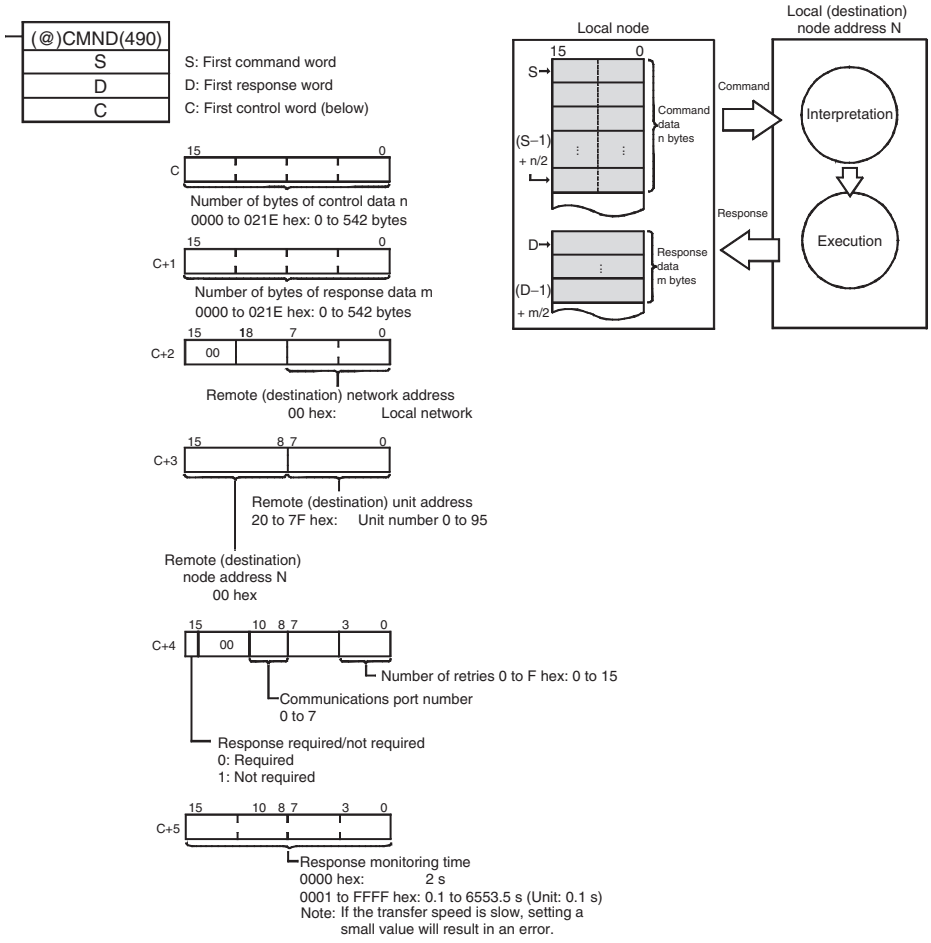


**Note** If the remote node is a CompoNet Slave Unit, CompoNet explicit messages can be sent by setting “28 02" as the FINS command code.

When doing so, set the response monitoring time in C+5 to a value no lower than the message monitoring timer value (default: 2 s). If it is set to a lower value, the next command sent after a timeout may encounter a busy signal.

## 6-3-2 Using CMND(490)

With CMND(490), normally the Network Communications Enable Flag at the CPU Unit (bits 00 to 07 of word A202, corresponding to ports 0 to 7) is used as the input condition as shown below.

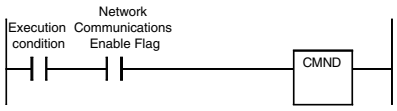


### Communications Flags

| Type | Flag name | Address | | Contents |
|---|---|---|---|---|
| | | Word | Bits | |
| Flags at PLC | Network Communications Enable Flag | A202 | 7 6 5 4 3 2 1 0<br>Port 7 Port 6 Port 5 Port 4 Port 3 Port 2 Port 1 Port 0 | 0: Enabled (Executing)<br>1: Disabled (Not executing) |
| | Network Communications Error Flag | A219 | 7 6 5 4 3 2 1 0<br>Port 7 Port 6 Port 5 Port 4 Port 3 Port 2 Port 1 Port 0 | 0: Normal completion<br>1: Error |

### Communications Flag Operation

- The Network Communications Enable Flag turns OFF when a send or receive instruction is being executed (from when the instruction is executed until a response is received), and ON after the execution has been completed (for either a normal completion or an error).
- The Network Communications Error Flag retains its status until the next transmission or reception is executed.
- The Network Communications Error Flag turns OFF when the next communications instruction is executed even if there is an error.

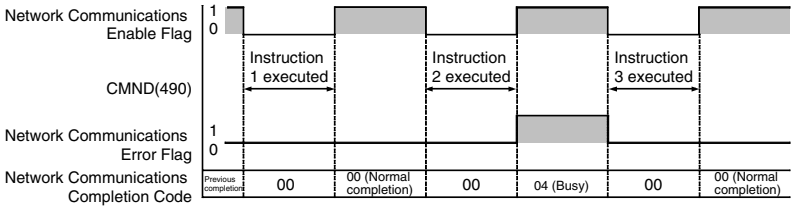


### Network Communications Completion Code

When execution of a network communications instruction has been completed, the status is stored in the following words as an Completion Code (FINS command end code). While the network communications instruction is being executed, the value is 00 or 0000 hex, and when execution has been completed the Completion Code is updated.

| Word | Contents |
|---|---|
| A203 | Port 0 Network Communications Completion Code |
| ≀ | ≀ |
| A210 | Port 7 Network Communications Completion Code |

**Note** In the CS/CJ Series, CMND(490) execution result is stored as one word (two bytes) of data. The Network Communications Completion Code is the same as the FINS command end code. Bits 08 to 15 of the Network Communications Completion Code correspond to the first byte, and bits 00 to 07 correspond to the second byte.

**Response Read Timing**

Read the response when the Network Communications Enable Flag for the port turns ON, as shown below.

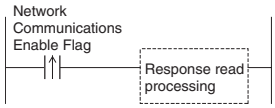


## Example: FINS Command Sent using CMND(490)

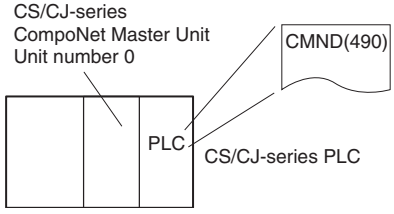


**Operation**

- Here, controller data is read from the CompoNet Master Unit.
- READ CONTROLLER DATA (0501) is used to read the data.
- The command data is written to D01000 onwards in the CPU Unit of the PLC to which the CompoNet Master Unit is connected, and the response data is stored in D02000 onwards.
- If the command results in an error, the completion code is stored in D00006 and the command is sent again.

**Command Details**

[ CMND S D C ]

| | | | | |
|---|---|---|---|---|
| S | D01000 | +0 | : 0501 hex | Command code |
| D | D02000 | | : First response word | |
| C | D00000 | +0 | : 0002 hex | Number of command data bytes |
| | | +1 | : 002E hex | Number of response data bytes: 46 |
| | | +2 | : 0000 hex | Remote (destination) network address |
| | | +3 | : 0020 hex | Remote (destination) node address: 00 hex<br>Remote (destination) unit address: 20 hex |
| | | +4 | : 0000 hex | Response: Required; Communications port No.: 0; Number of retries: 0 hex |
| | | +5 | : 0064 hex | Response monitoring time |

### Program Example

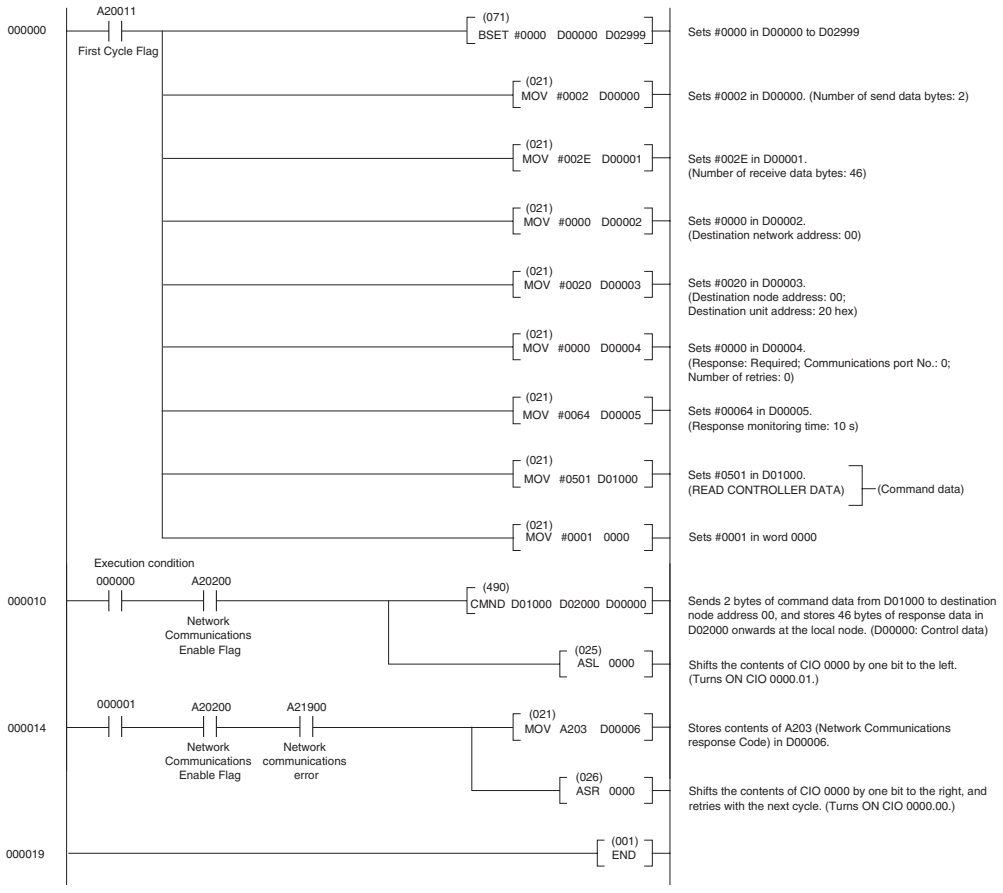


# 6-4 Sending Explicit Messages

Explicit messages can be sent using a CS/CJ-series CompoNet Master Unit. A explicit message is sent with a FINS command header attached.

Explicit messages can be sent to CompoNet Slave Units, as shown below.

- CompoNet Slave Units
  Example

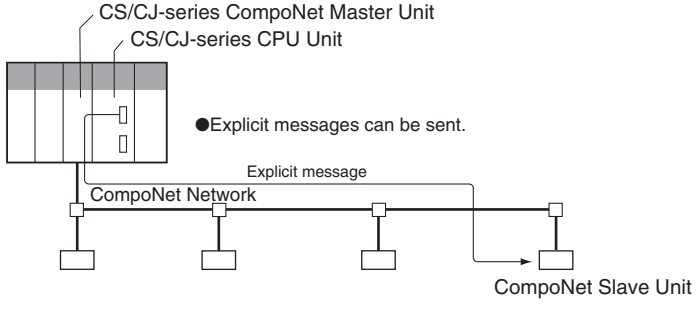

## 6-4-1 Sending Explicit Messages

When sending an explicit message to a CompoNet Slave Unit, the message is sent to the CompoNet Master Unit using a FINS command (2802) as shown below.

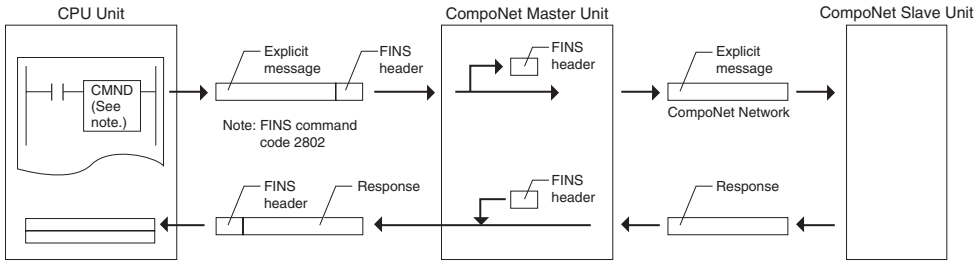


When sending an explicit message, send the FINS command to the Master Unit at the local node, and not to the actual destination (the CompoNet Slave Unit). The actual destination node address is specified in the command data for the explicit message transmission command.

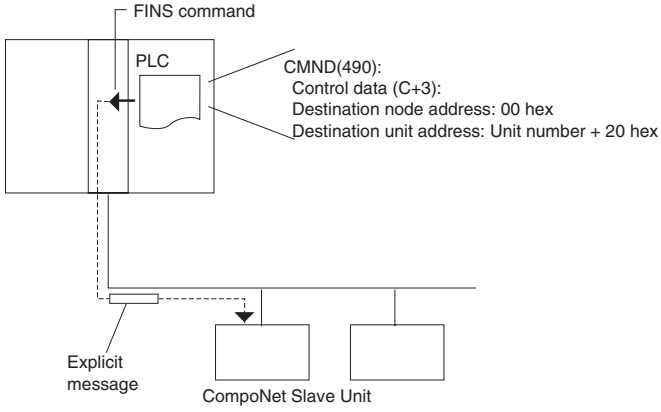


Example

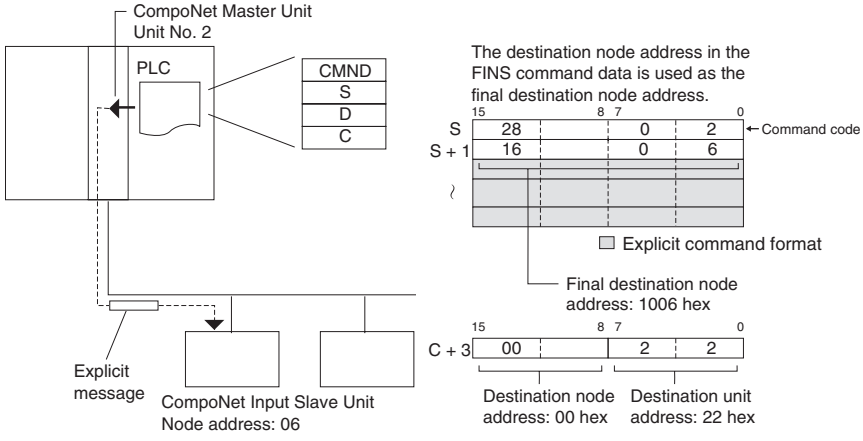


**Note** Depending on the type of Slave Unit at the destination, a message may not be received. Be sure to set retry processing.

## SEND EXPLICIT MESSAGE: 28 02

SEND EXPLICIT MESSAGE sends a CompoNet explicit message to the specified class, and receives a response.

### Command Format

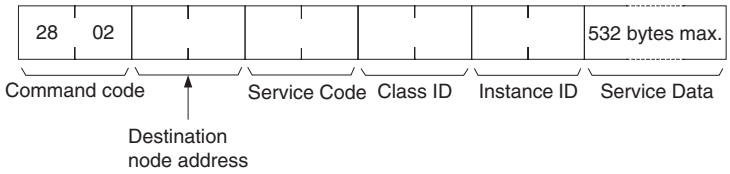


### Response Format

- Normal Response to Explicit Message

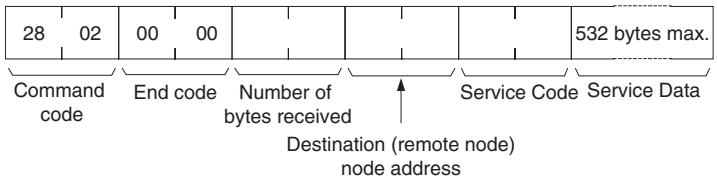


- Error Response to Explicit Message

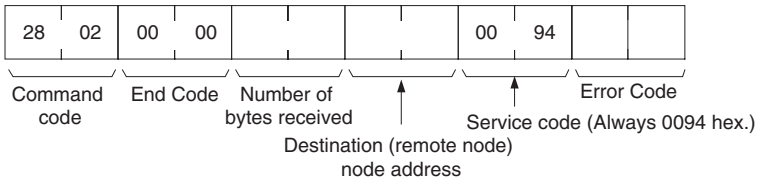


- Explicit Message Transmission Send Failure or Timeout

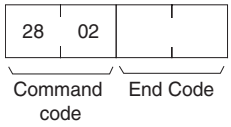


### Parameter Details

Destination Node Address (Command)

This parameter specifies the node address of destination Slave Unit for an explicit message.

| Word Input or Mixed Slave Unit | Word Output Slave Unit | Mixed Word Slave Unit | Bit Input or Mixed Slave Unit | Bit Output Slave Unit | Mixed Bit Slave Unit | Repeater Unit |
|---|---|---|---|---|---|---|
| 10xx hex | 20xx hex | 30xx hex | 40xx hex | 50xx hex | 60xx hex | 70xx hex |

"xx" represents the node address of a Slave Unit in hex.

Service Code (Command, Response)

For a command, this parameter specifies the service code defined by the CompoNet Network.

Refer to the *Service Code List* below.

In a normal response, the service code specified in the command is returned with the upper bit turned ON. In an error response, 0094 hex is return to indicate an error.

Service Code List

| Service | Read | Write | Reset | Save |
|---|---|---|---|---|
| Command | 0E hex | 10 hex | 05 hex | 16 hex |
| Normal Response | 8E hex | 90 hex | 85 hex | 96 hex |

Class ID (Command)

Specifies the destination class ID for the explicit message.

Instance ID (Command)

Specifies the destination instance ID for the explicit message.

Service Data (Command, Response)

For a command, this parameter specifies the data defined by the service code.

The reception data defined by the service code is returned in the response.

Number of Bytes Received (Response)

The number of bytes of data received from the destination (remote node) node address onwards is returned.

Destination (Remote Node) Node Address (Response)

The remote node address of the response source is returned.

Error Code (Response)

The error code defined by the CompoNet Network is returned.

**Description**

- SEND EXPLICIT MESSAGE sends an explicit message defined by CompoNet to a Slave Unit by another manufacturer and receives a response.
- Unlike other FINS commands, SEND EXPLICIT MESSAGE specifies the CompoNet Master Unit at the local node for the destination in the CMND(490) control code. The actual destination node is specified by the destination node address in the SEND EXPLICIT MESSAGE command. Be sure to set the Master Unit at the local node in the CMND(490) control code. An error will occur if the Master Unit at another node is specified.
- When a CompoNet Master Unit receives an explicit message, it automatically returns a response to the message.

## 6-4-2 Using CMND(490) to Send Explicit Messages

With CS/CJ-series CompoNet Master Units, explicit messages can be sent using a CMND(490) (DELIVER COMMAND) instruction in the ladder program in the CPU Unit.

The command data for an explicit message is sent with FINS command code 2802 hex attached at the beginning.

An explicit message response is received after FINS command code 2802 hex and the FINS command end code.

[ CMND S D C ]

S: First command word

D: First response word

C: FINS command end code

Command data is set from the address specified for CMND(490) operand S (first command word) onwards from the upper word to the lower word in the I/O memory in the order of the command format.

**Command Format Example**

■ **In this example, the code to clear an error is written to the CPU Unit.**

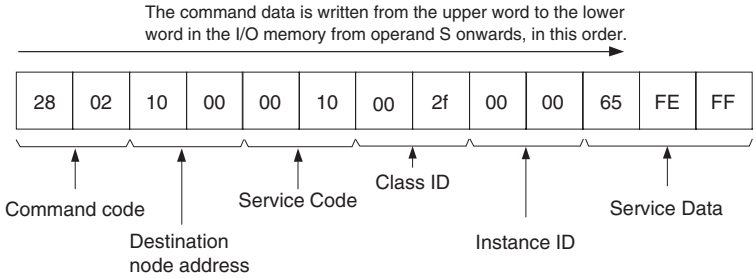


**Setting Data from CMND(490) Operand S Onwards**

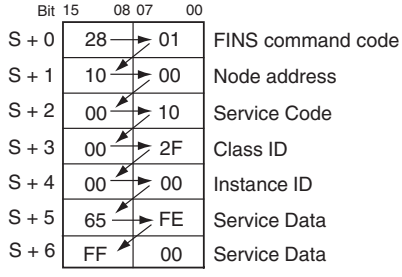


Similarly, from the CMND(490) operand D (first response word) onwards, response data is stored from the upper word to the lower word in the I/O memory in the order of the response format.

**Note** (1) When the data in the Service Data is in word (2-byte) or double word (4-byte) units, such as for word data or error clearing codes, it is specified from the lower byte to the higher byte as the command format.
For example, to specify word data 1234 hex, specify 34 hex and 12 hex in that order. To specify double word data 12345678 hex, specify 78 hex, 56 hex, 34 hex, and 12 hex in that order. The command formats are as follows:
Command Formats

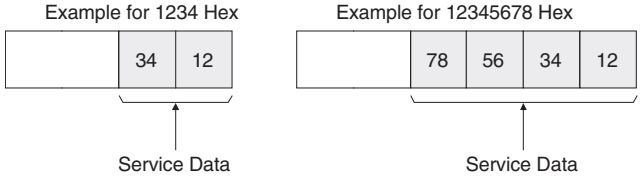


The data from CMND(490) operand S onwards will thus be as follows:

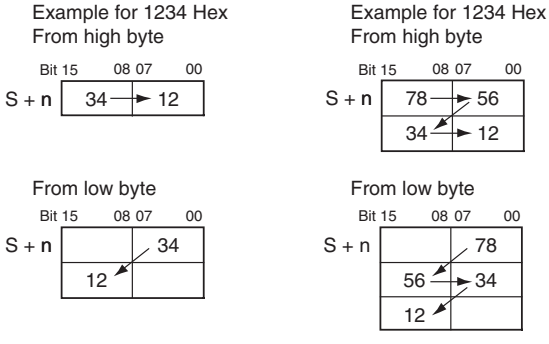

(2) Similarly, when the data in the response format Service Data is returned in word (2-byte) or double word (4-byte) units, it is specified in order from the low byte to the high byte as the command format.

**Example Using CMND(490) to Send an Explicit Message**

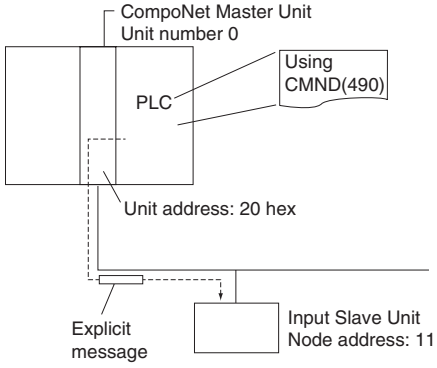


**Operation**

- Here, the header code (OMRON header code: 002F hex) is read from the Slave Unit.
- Use SEND EXPLICIT MESSAGE (28 02) to read the data.
- The command data is written to D01000 onwards in the CPU Unit of the PLC, and the response data is stored from D02000 onwards.
- If the command results in an error, the completion code is stored in D00006 and the command is sent again.

**Command Details**

**■ [ CMND S D C ]**

| | | | | |
|---|---|---|---|---|
| S | D01000 | +0 | : 2802 hex | Command code |
| | | +1 | : 100B hex | Input Slave node address: 11 |
| | | +2 | : 000E hex | Service code 0E hex |
| | | +3 | : 0001 hex | Class ID 0001 hex |
| | | +4 | : 0001 hex | Instance ID 0001 hex |
| | | +5 | : 0100 hex | Attribute ID 01 hex |
| D | D02000 | | : First response word | |
| C | D00000 | +0 | : 000B hex | Number of command data bytes: 11 |
| | | +1 | : 000C hex | Number of response bytes: 12 |
| | | +2 | : 0000 hex | Remote (destination) network address: 0 |
| | | +3 | : 0020 hex | Remote (destination) node address: 0<br>Remote (destination unit address): 20 hex |
| | | +4 | : 0000 hex | Response: required; Communications port No.: 0; Number of retries: 0 hex |
| | | +5 | : 0064 hex | Response monitoring time |

**Response**

| | | | |
|---|---|---|---|
| D02000 | +0 | : 2802 hex | |
| | +1 | : 0000 hex | |
| | +2 | : 0004 hex | |
| | +3 | : 100B hex | Response source node address: 11 (0B hex) |
| | +4 | : 008E hex | Normal completion: 8E hex |
| | +5 | : 2F00 hex | The vendor code is stored in order from the upper byte to the lower byte. |

## Program Example

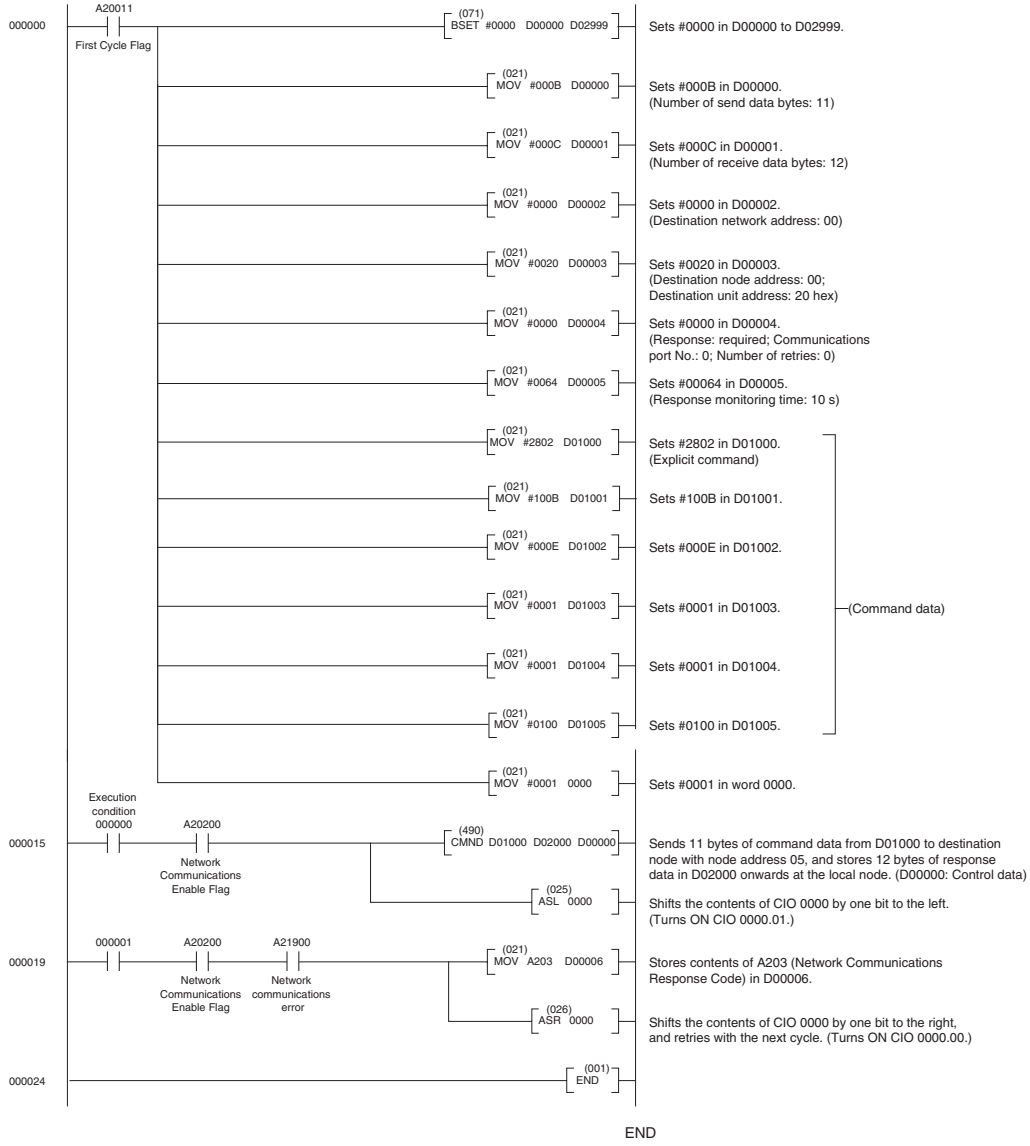

# SECTION 7
# Other Functions

This section describes connecting to CX-Programmer via the DeviceNet and the Memory Card backup function.


7-1 Simple Backup Function . . . . . 168
7-1-1 Overview of Function . . . . . 168
7-1-2 Applications . . . . . 168
7-1-3 Operating Methods . . . . . 168

# 7-1 Simple Backup Function

## 7-1-1 Overview of Function

The CPU Unit's simple backup function can be used when either a CS1W-CRM21 CompoNet Master Unit is mounted to a CS1-H CPU Unit, or a CJ1W-CRM21 CompoNet Master Unit is mounted to a CJ1-H CPU Unit. This function enables all setup data in the internal non-volatile memory (EEPROM) of the CompoNet Master Unit, as well as all data in the CPU Unit, to be automatically backed up to, restored from, or compared with a file in a Memory Card mounted in the CPU Unit.

When all the setup data in the CompoNet Master Unit is written to the Memory Card using a simple backup operation, it is backed up as a Unit/Board backup file in the Memory Card under the file name BACKUP□□.PRM.

**Note** The blanks in the backup file name are replaced with the unit addresses of a CompoNet Master Unit, which is the unit number of a Special I/O Slave Unit + 20 hex.

This backup file is also used when downloading data from or comparing data with a file in the Memory Card.

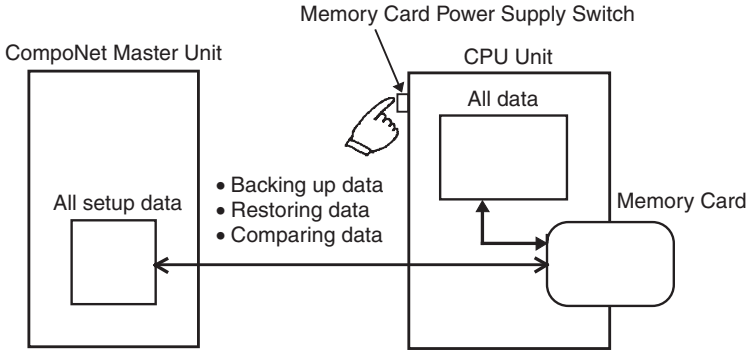


**Note** The data restoration by the simple backup function in CS1W-CRM21 or CJ1W-CRM21 CompoNet Master Units is not downwardly compatible. The backed up data can be restored only in CompoNet Master Units of the same or later unit versions.

## 7-1-2 Applications

Use the simple backup function to create a backup file of data for the entire PLC, including the CPU Unit and Serial Communications Units/Boards, or when replacing all the Units.

## 7-1-3 Operating Methods

### Backing Up CompoNet Master Unit Setup Files to Memory Card

Set the DIP switch on the front panel of the CPU Unit, as shown in the following table, and press down the Memory Card Power Supply Switch for 3 seconds.

| DIP switch on front panel of CPU Unit | |
|---|---|
| Pin 7 | Pin 8 |
| ON | OFF |

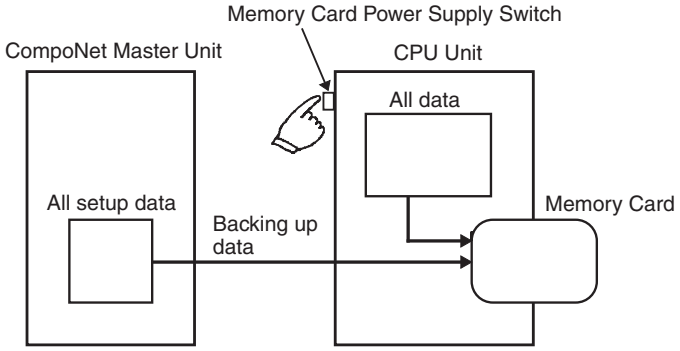


This operation will create the CompoNet Master backup file and also write the file to the Memory Card.

When the Memory Card Power Supply Switch is pressed, the MCPWR indicator on the front of the CPU Unit will flash once and then will be lit while data is being written. If the data is written normally, the indicator will turn OFF.

## Restoring CompoNet Master Unit Setup Files from Memory Card (Reading and Setting in Unit)

Set the DIP switch on the front panel of the CPU Unit, as shown in the following table, turn the power to the CPU Unit OFF and then ON again.

| DIP switch on front panel of CPU Unit | |
|---|---|
| Pin 7 | Pin 8 |
| ON | OFF |

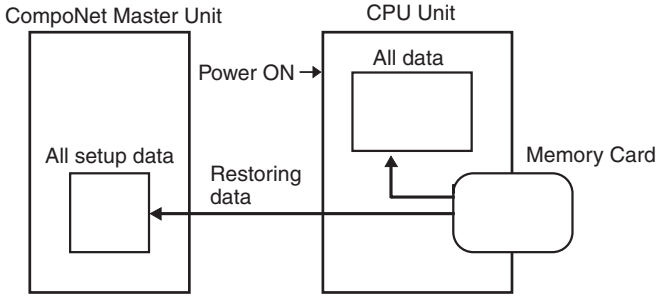


This operation will read the CompoNet Master Unit setup data file from the Memory Card and restore the data in the CompoNet Master Unit.

When the power supply is ON, the MCPWR indicator on the front of the CPU Unit will turn ON, flash once, and then will remain lit while data is being read. After the data is read correctly, the indicator will turn OFF.

**Note**

(1) CompoNet Master Unit setup files are valid only in the correct communications mode. Before you restore the data, make sure the mode number is set to the same value as when the data was backed up.

(2) If data restoration from a memory card fails, the 7-segment indicator on the front panel will display "H8." The data on the Memory Card may be incorrect. Before you restore the data, make sure that backup operation is completed normally.

## Comparing CompoNet Master Unit Setup Files in Memory Card

Set the DIP switch on the front panel of the CPU Unit, as shown in the following table, and press down the Memory Card Power Supply Switch for 3 seconds.

| DIP switch on front panel of CPU Unit | |
|---|---|
| Pin 7 | Pin 8 |
| OFF | OFF |

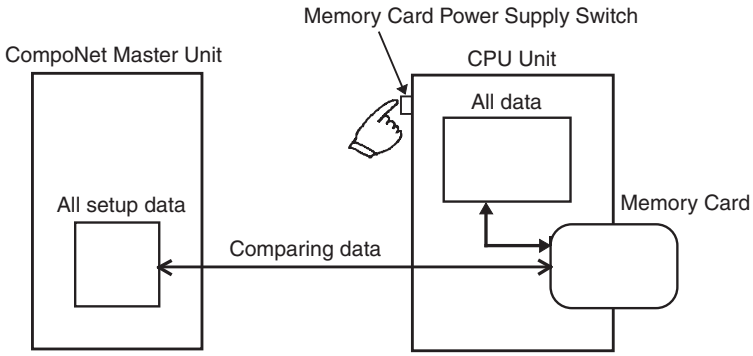


This operation will compare the data in the CompoNet Master setup file in the Memory Card with the setup data in the CompoNet Master Unit.

When the Memory Card Power Supply Switch is pressed, the MCPWR indicator on the front of the CPU Unit will flash once, and then will remain lit while data is being compared. If the data is the same, the indicator will turn OFF.

# SECTION 8
# Troubleshooting

This section provides information on dealing with problems that might occur with the Master Unit


8-1 Handling Errors . . . . . 172
8-1-1 CompoNet Master Unit Errors . . . . . 172
8-1-2 Troubleshooting Sequence When an Error Occurs. . . . . 172
8-2 Error History Function . . . . . 178

# 8-1 Handling Errors

This section describes how to handle CompoNet Network errors that may occur.

## 8-1-1 CompoNet Master Unit Errors

This section describes the meanings of the LED indicators and seven-segment display when errors occur at a CompoNet Master Unit, and it provides countermeasures for handling the errors.

### Meanings of CompoNet Master Unit Indicators and Procedure for Handling Errors

CompoNet Master Units are designed to follow the same basic procedures as CS/CJ-series Special I/O Units for handling errors.

When an error occurs at a Special I/O Unit, the general location of the error is shown by the status of the indicators.

With CompoNet Master Units, in addition to these indicators, a seven-segment display shows the location and content of errors.

## 8-1-2 Troubleshooting Sequence When an Error Occurs

**1. Determine the general location of the error.**

Check the pattern in which the indicators are lit to determine whether the error occurred in the PLC or in the network.

↓

**2. Determine the details.**

Check the seven-segment display and the status area of the CompoNet Master Unit to determine the location and content of the error.

↓

**3. Determine the cause of the error.**

Consider the onsite conditions in relation to the circumstances of the error, and determine and clear the cause of the error.

↓

**4. Take countermeasures.**

Check the system status in the *Unit operation after error detection* column, check the required operations in the *Countermeasures* column, and restore system operation to normal.

The CompoNet Master Unit error detection function, operations following error detection, and countermeasures are described on the following pages.

## Initialization Errors

| MS indicator | NS indicator | 7-segment display | Item | Error history (hex) | Probable cause of error | Unit operation after error detection | Countermeasures |
|---|---|---|---|---|---|---|---|
| ◎ Red | ● | H1 | Unit number setting error | --- | One of the following errors occurred in the unit number setting for the Master Unit.<br>• An illegal unit number was set.<br>• A unit number already being used for another Unit was set. | The Master Unit stops operating and goes into standby mode. | Correct the unit number, and then restart the Master Unit. Either of the following methods can be used to restart the Master Unit:<br>1) Cycle the power to the PLC.<br>2) Turn ON the CPU Unit's Special I/O Restart Flag. |
| ◎ Red | ● | H2 | The CPU Unit is defective. | --- | --- | | Restart the Master Unit. If the same error occurs again, replace the Master Unit. |
| ○ Red | ● | H3 | Hardware test error (Unit interface test) | --- | An error was detected during the Master Unit interface check. | | If the same error occurs even when the Unit is mounted to another CPU Unit, replace the Master Unit. |
| ● | ○ Red | H3 | Hardware test error (Communications ASIC test) | --- | An error was detected during the Master Unit communications ASIC check. | | |
| ○ Red | ○ Red | H3 | Hardware test error (RAM test) | --- | An error was detected during the Master Unit RAM check. | | |
| ◎ Red | ● | H4 | Communications mode setting error | --- | An illegal rotary switch setting was detected for the communications mode (i.e., the switch is set to 4, 5, 6, 7, or 9). | | Correct the communications mode setting, and then restart the Master Unit. |
| ◎ Red | ● | H6 | The CPU Unit is defective. | 000F | --- | After the error is recorded in the error history, the Master Unit stops operating and goes into standby mode. | Restart the Master Unit. If the same error occurs again, replace the Master Unit. |
| ◎ Red | ● | H7 | No I/O table registration. | 0006 | The Unit is not registered to the CPU Unit's I/O table. | | Create the I/O tables. |
| --- | --- | H8 | Total backup download error | --- | A batch backup restoration failed. | The Unit will start with the parameters that are saved internally. | If the error occurs again even after restarting the Unit, set the parameters in the Unit individually. |
| ◎ Red | --- | HA | CPU Unit memory error | 0012 | An error response to a FINS command (READ ROUTING TABLES) for the CPU Unit was detected. | After the error is recorded in the error history, operation continues without the routing tables. | Restart the Master Unit. If the same error occurs again, replace the Master Unit. |
| ◎ Red | --- | Hb | Event timeout | 0011 | A timeout was detected for a system setting read request to the CPU Unit. | After the error is recorded in the error history, operation continues while the interface with the CPU Unit is stopped. | |
| ◎ Red | --- | HC | Setting table error | 021A | A logical error (such as an out-of-range error) occurred in routing tables read from the CPU Unit at initialization, or a sum error or an error other than a timeout was returned. | After the error is recorded in the error history, operation continues without the routing table. | Correct or delete the routing table. |

Indicators

○: Lit

◎: Flashing

●: Not lit

---: Not applicable

## Exception Processing

| MS indicator | NS indicator | 7-segment display | Item | Error history (hex) | Probable cause of error | Unit operation after error detection | Countermeasures |
|---|---|---|---|---|---|---|---|
| ○ Red | ● | Not lit | Unit-related error | 0601 | Special I/O Unit error | After the error is registered in the error history, WDT refreshing is stopped and the Master Unit completely stops. | There may be some noise interference occurring. Eliminate the source of the noise and then turn ON the power to the PLC again. |
| ○ Red | ● | Not lit | Unit WDT error | --- | There was a WDT timeout for the Unit. | The Master Unit completely stops. | |

Indicators

○: Lit

◎: Flashing

●: Not lit

---: Not applicable

## Errors in PLC Monitoring

| MS indicator | NS indicator | 7-segment display | Item | Error history (hex) | Probable cause of error | Unit operation after error detection | Countermeasures |
|---|---|---|---|---|---|---|---|
| --- | --- | --- | Fatal CPU Unit error | --- | The CPU Unit Fatal Error Bit is ON for the Unit status information in the cyclic area. | System operation continues and the I/O cycle is stopped. | Check and clear the error in the CPU Unit. When the Fatal Error Bit turns OFF, operation will automatically recover. |
| --- | --- | --- | Load OFF | --- | The Load OFF Bit is ON in the Unit status information in the cyclic area. | System operation continues and the I/O cycle is stopped. Load OFF Bit monitoring continues. After recovery, normal operation is restored. | Check the situation at the CPU Unit. When the Load OFF Bit turns OFF, operation will automatically recover.<br>**Note** This occurrence is not an error. |
| ◎ Red | --- | H9 | Bus error | 000E | An error occurred in the bus for exchanging data with the CPU Unit. | • Cyclic operations are stopped.<br>• The communications cycle is stopped. | Restart the PLC by cycling the power. |
| ◎ Red | --- | HF | CPU Unit WDT error | 0001 | An error occurred at the CPU Unit, and CPU Unit operations stopped. | The error is registered in the error history. System operation continues, but the communications cycle is stopped. | Clear the error in the CPU Unit, and then restart the Master Unit. |
| ● | ● | Not lit | Power failure | --- | The CPU Unit power supply is down. | System operation is completely stopped by a hardware reset. | Clear the cause of the failure and turn ON the power again. |
| ◎ Red | --- | HE | CPU Unit monitoring error | 0002 | Service from the CPU Unit is irregular. The monitoring time is acquired at initialization. Normally monitoring is for 11 s. | The error is registered in the error history. (It is registered only once even though the error continues.)<br>• The I/O cycle is stopped.<br>• Cyclic operations are stopped.<br>• The final data is provided to an output Slave Unit.<br>There is a possibility of recovery from this error, restoring normal operations. | Check the CPU Unit operating environment. |

Indicators

○: Lit

◎: Flashing

●: Not lit

---: Not applicable

## Errors in Remote I/O Communications

The following indicator patterns show that an error related to the CompoNet Network has occurred.

Errors can basically be identified by the NS indicator flashing red and the seven-segment display showing d*.

| MS indicator | NS indicator | 7-segment display | Item | Error history (hex) | Probable cause of error | Unit operation after error detection | Countermeasures |
|---|---|---|---|---|---|---|---|
| --- | ◎ Red | d9 ↓ yy ↓ zzz | Communications error | 0374 | A system disconnection was detected. | System operations continue. Each detected disconnection is registered in the error history. Participation of the disconnected Slave Unit is awaited. When there is no longer any cause of an error, normal operation is restored. (The NS indicator lights green.) | Either of the following may be the cause of the error.<br>1) Communications had to be continually retried for the applicable Slave Unit due to noise, until the specified number of retries was exceeded.<br>2) Responses to communications from the Master Unit are not possible because of a malfunction, line disconnection, or communications power supply interruption at the Slave Unit itself.<br>Inspect the Slave Unit where the disconnection was detected, and remove the cause of the error. There is no need to restart the Master Unit. |
| --- | ◎ Red | d 0 ↓ yy ↓ zzz | Address duplication error | 0376 | An address duplication error was detected for a Slave Unit attempting to participate. | The duplication error is registered in the error history. All system operations continue. | A Slave Unit or Repeater Unit in the same network is set for the same node. Use the following procedure:<br>1) Turn OFF the power to the Master Unit and the Slave Unit.<br>2) Change the duplicate node number to a new value.<br>3) Turn the power back ON to the Master Unit and the Slave Unit. |
| --- | ◎ Red | E5 | Illegal configuration error | 0378 | It was detected that the Slave Units and Repeater Units requesting to participate in the network exceeded the permitted number of Repeater Unit segments (two). | Subsequent Slave Unit participation is prohibited from the point where it is detected that the permitted number of Repeater Unit segments has been exceeded in the participation processing. Other system operations continue. The error is registered in the error history. After normal status is restored, the Unit recovers by being restarted. | The maximum number of Repeater Unit segments is registered to two in the Master Unit and cannot be changed. This error thus indicates that there are three or more Repeater Unit segments. Correct the wiring and restart the Master Unit. |
| --- | ◎ Red | d 5 ↓ yy ↓ zzz | Verification error (non-existent Slave Unit) | 0370 | It was detected that a Slave Unit registered in the Registration Table is not participating within a fixed time after power is turned ON to the Master Unit. The monitoring time is set using the CX-Integrator. | The error is registered in the error history. System operations all continue, and remote I/O operations start. Participation of the Slave Unit where the error occurred continues to be monitored. When Slave Unit participation is completed, normal status is restored. (The NS indicator lights green.) | If the error is not cleared, check the Slave Unit that is not participating. |
| --- | ◎ Red | d 6 ↓ yy | Verification error (unregistered Slave Unit) | 0372 | Participation of an unregistered Slave Unit was detected. | The error is registered in the error history. All other system operations continue, without the participation of the unregistered Slave Unit. Recovery is attained by restoring normal status and restarting the Unit. | Check and correct the status of the unregistered Slave Unit, and then restart the Master Unit. |
| --- | ◎ Red | A0 | Communications have stopped due to a communications error. | 0375 | A communications error was detected while communications were set to be stopped when a communications error occurred. | The error is registered in the error history. System operations continue. Remote I/O communications with the Slave Units stop, and communications with the CPU Unit continue. There is no automatic recovery even after the cause of the error is removed. The Unit must be restarted to recover. | Check and eliminate the cause of the error, and then restart the Master Unit. |

Indicators

◯: Lit

◎: Flashing

●: Not lit

---: Not applicable

yy: Indicates the Slave Unit type, as shown below.

| yy | Actual display | Slave Unit type |
|---|---|---|
| i | | Input (including inputs and outputs together) |
| o | | Output |
| bi | | Bit input |
| bo | | Bit output |
| r | | Repeater Unit |

zzz: Node address where the error occurred (2 digits decimal) (Note: The 100s digit is displayed with a dot.)

## Errors in Memory Access Processing

The following indicator patterns show that an error has occurred in the CPU Unit where the Master Unit is mounted.

| MS indicator | NS indicator | 7-segment display | Item | Error history (hex) | Probable cause of error | Unit operation after error detection | Countermeasures |
|---|---|---|---|---|---|---|---|
| ◎ Red | --- | E4 | Software setting table logic error | 021A | 1) The mode is the Software Setting Mode (Mode 8) even though the Software Setting Table is disabled.<br>2) The Software Setting Table is corrupted. | The error is registered in the error history. Data and message exchanges with the CPU Unit are executed without starting remote I/O communications. | 1) Restart the Master Unit in Mode 8.<br>2) Using the CX-Integrator, reset the Software Setting Table. |
| ◎ Red | --- | E6 | Network parameters logic error | 021A | The Network Parameters Table is corrupted. | | Using the CX-Integrator, reset the network parameters. |
| ◎ Red | --- | E7 | Slave Unit parameters logic error | 021A | The Slave Unit Parameters Table is corrupted. | | Using the CX-Integrator, reset the Slave Unit parameters. |
| ◎ Red | --- | E8 | Registration Table logic error | 021A | 1) The registration settings (REGS) are enabled even though the Registration Table is disabled.<br>2) The Registration Table is corrupted. | | Using the CX-Integrator, reset the Registration Table. |
| ◎ Red | --- | E9 | Memory access error | 0602 | One of the following errors occurred when the non-volatile memory in the Unit was accessed:<br>1) Not all 64 records could be used during initialization or when registering an error in the error history.<br>2) An error history reading or writing error<br>3) A network parameters reading or writing failure during initialization<br>4) An identity information reading failure during initialization<br>5) A Registration Table information reading or writing failure during initialization<br>6) A Software Setting Table information reading or writing failure during initialization | For 1) and 2), access to EEPROM stops from RAM error history registration onwards. All other normal operations continue. (Registering the error history to RAM continues.)<br>For 3), 5), and 6) (reading), other operations continue without starting the communications cycle.<br>For 3), 5), and 6) (writing), further accessing of EEPROM is stopped. Aside from these, normal operations continue.<br>For 4), normal operations are executed. | Restart the Master Unit. If the same error occurs again, replace the Master Unit. |

Indicators

○: Lit

◎: Flashing

●: Not lit

---: Not applicable

## Slave Unit Errors

The following indicator patterns show that a Slave Unit has detected an error.

| MS indicator | NS indicator | Item | Probable cause of error | Unit operation after error detection | Countermeasures |
|---|---|---|---|---|---|
| ● | --- | No power supply input | The specified power supply voltage is not being supplied from the communications power supply. | Slave Unit operation stops. | Remove the cause of the error, and turn ON the power again. If the Slave Unit still does not operate normally when the power supply voltage is being supplied in the specified range, then replace the Slave Unit. |
| ◯ Green | ◎ Red | Communications error | Remote I/O communications with the Master Unit timed out and stopped after a connection had been established. | Slave Unit operation continues. Output Units control output functions according to the communications error output setting function for when errors occur. | Any of the following may be the cause of the communications error.<br>1) Operation was stopped by a PLC System error, including the Master Unit.<br>Check the PLC System status and clear the error.<br>There is no need to restart the Slave Unit.<br>2) Communications with the Master Unit are impossible because of a problem such as a disconnected line or a malfunction.<br>Check the cables, terminals, and Repeater Units.<br>Clear the error, and then turn the communications power supply back ON again.<br>3) Communications with the applicable Slave Unit had to continue to be retried because of noise. The number of retries exceeded the specified value, so the Master Unit stopped communications.<br>Check for noise interference around the affected Slave Unit.<br>Aside from 1) above, there is no need to restart the Master Unit. |
| ◯ Green | ◯ Red | Address duplication error | A Slave Unit with the same node address exists on the network. | Slave Unit operation stops. | Check and correct the Slave Unit's node numbers, and then perform the following procedure:<br>1) Turn OFF the communications power supply for the Master Unit and the Slave Unit.<br>2) Turn the communications power supply back ON again. |
| ◯ Red | --- | Unit error | An error occurred at the Slave Unit itself for one of the following reasons.<br>1) The Slave Unit failed to write to internal memory (EEPROM).<br>2) The Slave Unit failed to read internal memory (EEPROM). | Slave Unit operation stops. For Output Units, outputs stop. | To eliminate the first possibility, check the set value for the Slave Unit's node address. Then restart the Slave Unit (i.e., turn the communications power supply OFF and back ON again). If the same error occurs again, replace the Slave Unit. |

Indicators

◯: Lit

◎: Flashing

●: Not lit

---: Not applicable

## Repeater Unit Errors

The following indicator patterns show that a Repeater Unit has detected an error.

| MS indicator | NS indicator | Item | Probable cause of error | Unit operation after error detection | Countermeasures |
|---|---|---|---|---|---|
| ● Not lit | --- | No power supply | The specified power supply voltage is not being supplied from the communications power supply. | Repeater Unit operation stops. | Remove the cause of the error, and turn ON the power again. If the Repeater Unit still does not operate normally when the power supply voltage is being supplied in the specified range, then replace the Repeater Unit. |
| ○ Green | ◎ Red | Communications error | Remote I/O communications with the Master Unit timed out and stopped after a connection had been established. | Repeater Unit operation continues. | Any of the following may be the cause of the communications error. Check and remove the cause of the error.<br>1) Operation was stopped by a PLC System error, including the Master Unit.<br>Check the PLC System status and clear the error. There is no need to restart the Repeater Unit.<br>2) Communications with the Master Unit are impossible because of a problem such as a disconnected line or a malfunction.<br>Check the cables, terminals, and Repeater Units. Clear the error, and then turn the communications power supply back ON again.<br>3) Communications with the applicable Unit had to continue to be retried because of noise. The number of retries exceeded the specified value, so the Master Unit stopped communications.<br>Check for noise interference around the affected Unit.<br>Aside from 1) above, there is no need to restart the Master Unit. |
| ○ Green | ○ Red | Address duplication error | A Repeater Unit with the same node address exists on the network. | Repeater Unit operation stops. | Check and correct the Repeater Unit's node number, and then perform the following procedure:<br>1) Turn OFF the communications power supply for the Master Unit and the Repeater Unit.<br>2) Turn the communications power supply back ON again. |
| ○ Red | --- | Unit error | An error occurred at the Repeater Unit itself for one of the following reasons.<br>1) The Repeater Unit failed to write to internal memory (EEPROM).<br>2) The Repeater Unit failed to read internal memory (EEPROM). | Repeater Unit operation stops. | To eliminate the first possibility, check the set value for the Repeater Unit's node address. Then restart the Repeater Unit (i.e., turn the communications power supply OFF and back ON again). If the same error occurs again, replace the Repeater Unit. |

Indicators

○: Lit

◎: Flashing

●: Not lit

---: Not applicable

# 8-2 Error History Function

The error history registers errors detected by the CompoNet Master Unit, along with the times at which they occur. The recorded results can be read and cleared by FINS commands to the CompoNet Master Unit. They can also be monitored using the CX-Integrator.

## Error History Table

### Error History Table

Each time an error occurs, one record (up to a maximum of 64 records) is registered in the Error History Table in the CompoNet Master Unit's internal RAM. Once the maximum number of records (64) has been registered in the Error History Table, the oldest record is deleted in order with each new record that is registered.

The following information is stored in the Error History Table.

- Error codes

- Detail codes
- The times at which errors occurred (using the CPU Unit's time data)

**Error History Save Area**

When an error is detected, the contents of the error and the time at which it occurred are registered as an error history in the Unit's internal RAM. Serious errors are registered not only in RAM but also in EEPROM. The error history registered in EEPROM is saved during a power interruption or when the Unit is restarted. When the CompoNet Master Unit is started, the error history in EEPROM is copied to RAM.

When the contents of the error history are read by a FINS command or the CX-Integrator, it is the error history saved on RAM that is read. When the error history is cleared (either by a FINS command or the CX-Integrator), however, it is cleared from both RAM and EEPROM.

**Reading or Clearing Error History Tables**

Use FINS commands to the CompoNet Master Unit to read or clear the Error History Table. Use the CompoNet Master Unit as the destination address for FINS commands.

CompoNet Master Unit address: 20 hex + unit number

For instructions on using FINS commands, refer to the *CS/CJ-series PLC Communications Command Reference Manual* (Cat. No. W342).

For details on FINS commands for CompoNet Master Units, refer to *Appendix A*.

**Note** The CPU Unit's time information is read and used by the CompoNet Master Unit. If this time information cannot be read from the CPU Unit, the error history time information will be shown as all zeros. In addition, for CS/CJ-series PLCs, the time setting for the CPU Unit's built-in clock must be reset when the power is turned ON after replacing the battery. If the time is not reset, correct time information will not be registered. When the error history is read, the time information will be unreliable.

## Error Code and Detailed Information Tables

| Error code (hex) | Error contents | Detailed information | | EEPROM |
|---|---|---|---|---|
| | | First byte | Second byte | |
| 0001 | CPU Unit WDT error | 00 hex | 00 hex | ❍ |
| 0002 | CPU Unit service monitoring error (Service from the CPU Unit is irregular.) | Monitoring time (ms) | | ❍ |
| 0006 | Other CPU Unit errors | Bit 14: Unit number duplication<br>Bit 11: No applicable Unit in Registration Table<br>All other bits are reserved. | | ❍ |
| 000F | CPU Unit initialization error | 00 hex | 00 hex | ❍ |
| 0011 | Event timeout | MRC | SRC | ❍ |
| 0012 | CPU Unit memory error | 01 hex: Read error<br>02 hex: Write error | 03 hex: Routing Table | ❍ |
| 0101 | Transmission is not possible because local node is not participating in the network. | | | × |
| 0103 | Transmission is not possible because of too many resends. | Command<br>Bit 15: OFF<br>Bits 14 to 8: SNA<br>Bits 7 to 0: SA1 | | × |
| 0106 | Transmission is not possible because of an address duplication error. | | | × |

| Error code (hex) | Error contents | Detailed information | | EEP ROM |
|---|---|---|---|---|
| | | First byte | Second byte | |
| 0107 | Transmission is not possible because remote node is not participating in the network. | Response<br>Bit 15: ON<br>Bits 14 to 8: DNA<br>Bits 7 to 0: DA1 | | × |
| 0108 | Transmission is not possible because there is no Unit corresponding to the unit number. | | | × |
| 0109 | Transmission is not possible because the remote node is busy. | | | × |
| 010B | Transmission is not possible because of a PLC error. | | | × |
| 010D | Transmission is not possible because no destination address is set in the routing tables. | | | × |
| 010E | Transmission is not possible because the routing tables are not registered. | | | × |
| 010F | Transmission is not possible because of a routing table error. | Command<br>Bit 15: OFF<br>Bits 14 to 8: SNA<br>Bits 7 to 0: SA1 | | × |
| 0110 | Transmission is not possible because of too many relays. | | | × |
| 0111 | Transmission is not possible because the command exceeds the maximum command length. | Response<br>Bit 15: ON<br>Bits 14 to 8: DNA<br>Bits 7 to 0: DA1 | | × |
| 0112 | Transmission is not possible because of a header error. | | | × |
| 0117 | Packet was discarded because the internal reception buffer was full. | | | × |
| 0118 | Illegal packet discarded | | | × |
| 0120 | Unexpected routing error | | | × |
| 0122 | Packet was discarded because it could not be serviced in the current mode. | | | × |
| 0123 | Packet was discarded because the internal buffer was full. | | | × |
| 0124 | Routing is not possible because the maximum frame length was exceeded. | | | × |
| 0125 | Packet was discarded because of a response timeout. | | | × |
| 0300 | Packet was discarded because of a parameter error. | | | × |
| 021A | Setting table logic error | 00 hex | 01 hex: Network parameters<br>02 hex: Software Setting Table<br>03 hex: Routing Table<br>04 hex: System Setup<br>0A hex: Registration Table | ❍ |
| 0347 | I/O refresh error | 00 hex | 00 hex | × |
| 0370 | Verification error (non-existent Slave Unit) | 00 | 00 | × |
| 0372 | Verification error (unregistered Slave Unit) | 10 hex: Word Input Slave Unit, Word I/O Slave Unit<br>20 hex: Word Output Slave Unit<br>40 hex: Bit Input Slave Unit, Bit I/O Slave Unit<br>50 hex: Bit Output Slave Unit | Node address (hex) | × |

| Error code (hex) | Error contents | Detailed information | | EEP ROM |
|---|---|---|---|---|
| | | First byte | Second byte | |
| 0374 | Communications error | 10 hex: Word Input Slave Unit, Word I/O Slave Unit<br>20 hex: Word Output Slave Unit<br>40 hex: Bit Input Slave Unit, Bit I/O Slave Unit<br>50 hex: Bit Output Slave Unit<br>70 hex: Repeater Unit | Node address (hex) | × |
| 0375 | Communications have stopped due to a communications error.<br>[Cause]<br>A communications error occurred while communications were set to be stopped. | 10 hex: Word Input Slave Unit, Word I/O Slave Unit<br>20 hex: Word Output Slave Unit<br>40 hex: Bit Input Slave Unit, Bit I/O Slave Unit<br>50 hex: Bit Output Slave Unit | Node address (hex) | ❍ |
| 0376 | Address duplication error | 10 hex: Word Input Slave Unit, Word I/O Slave Unit<br>20 hex: Word Output Slave Unit<br>40 hex: Bit Input Slave Unit, Bit I/O Slave Unit<br>50 hex: Bit Output Slave Unit<br>70 hex: Repeater Unit | Node address (hex) | × |
| 0378 | Illegal Repeater Unit/configuration error | 10 hex: Word Input Slave Unit, Word I/O Slave Unit<br>20 hex: Word Output Slave Unit<br>40 hex: Bit Input Slave Unit, Bit I/O Slave Unit<br>50 hex: Bit Output Slave Unit<br>70 hex: Repeater Unit | Node address (hex) | × |
| 0601 | Illegal interrupt | 00 | 00 | ❍ |
| 0602 | Special I/O Unit memory error | 01 hex: Read error<br>02 hex: Write error | 01 hex: Network parameters<br>02 hex: Software Setting Table<br>04 hex: Slave Unit parameters<br>06 hex: Error history<br>09 hex: Identity information<br>0A hex: Registration Table | ❍ (Error history only: x) |

# Appendix A

# FINS Commands Addressed to CompoNet Master Units and Responses

## Command Codes

### Commands Addressed to CompoNet Master Units

| Command | Command code |
|---|---|
| START I/O COMMUNICATIONS | 0401 |
| RESET | 0403 |
| READ CONTROLLER INFORMATION | 0501 |
| ECHOBACK TEST | 0801 |
| READ ERROR LOG | 2102 |
| CLEAR ERROR LOG | 2103 |

### CompoNet Explicit Message Command

| Command type | Command code |
|---|---|
| SEND EXPLICIT MESSAGE | 2802 |

| START I/O COMMUNICATIONS | 0401 |
|---|---|

Starts I/O communications for the CompoNet Master Unit.

## Command Format

| MRC 04 | SRC 01 |
|---|---|
| 1B | 1B |

## Response Format

| MRC 04 | SRC 01 | MRES | SRES |
|---|---|---|---|
| 1B | 1B | 1B | 1B |

## End Codes (MRES/SRES)

| End code (hex) | Contents |
|---|---|
| 0000 | Normal completion |
| 1001 | The maximum permissible command length was exceeded. |
| 2605 | I/O communications are already being executed. |

## Description

START I/O COMMUNICATIONS starts I/O communications for the CompoNet Master Unit. It can be used in RUN, MONITOR, or PROGRAM mode. It can be executed only while I/O communications are stopped. (It cannot be executed during I/O communications or while the communications cycle is stopped.)

| RESET | 0403 |
|---|---|

Resets (restarts) the CompoNet Master Unit.

A parameter can be added to restart at a specified baud rate.

## Command Format for Resetting

| MRC 04 | SRC 03 |
|---|---|
| 1B | 1B |

## Command Format for Resetting at a Specified Baud Rate

| MRC 04 | SRC 03 | FLAG XX |
|---|---|---|
| 1B | 1B | 1B |

## Response Format

| MRC 04 | SRC 03 | MRES | SRES |
|---|---|---|---|
| 1B | 1B | 1B | 1B |

**Note** No response is returned for a normal completion. A response is returned only when an error occurs.

## End Codes (MRES/SRES)

| End code (hex) | Contents |
|---|---|
| 1001 | The maximum permissible command length was exceeded. |
| 1004 | There is an error in the command format. |
| 250F | A memory error occurred. |

## Parameter Details

FLAG: Stores a value specifying the desired baud rate.

01 hex: Reset at 93.75 k.

02 hex: Reset at 1.5 M.

03 hex: Reset at 3 M.

04 hex: Reset at 4 M.

00/FF hex: Reset at baud rate set on DIP switch.

## Description

RESET resets the CompoNet Master Unit.

No response is returned for a normal completion. A response is returned only when an error occurs.

This command is used to restore operation after resetting the Master Unit when a communications error has occurred at a Slave Unit during I/O communications.

| READ CONTROLLER INFORMATION | 0501 |
|---|---|

Reads CompoNet Master Unit information.

## Command Format

| MRC 05 | SRC 01 |
|---|---|
| 1B | 1B |

## Response Format

| MRC 05 | SRC 01 | MRES | SRES | Model | Version | Mode No. | DIP Switch |
|---|---|---|---|---|---|---|---|
| 1B | 1B | 1B | 1B | 20B | 20B | 1B | 1B |

## End Codes (MRES/SRES)

| End code (hex) | Contents |
|---|---|
| 0000 | Normal completion |
| 1001 | The maximum permissible command length was exceeded. |

## Parameter Details

### Model (Response)

The CompoNet Master Unit model number is returned in up to 20 bytes of ASCII.

The unused portion of the 20 bytes is padded with spaces (20 hex).

**CJ1W-CRM21□□□□□□□□□□ (□: Space)**

or

**CS1W-CRM21□□□□□□□□□□ (□: Space)**

### Version (Response)

**V1.00□□□□□□□□□□□□□□□□ (□: Space)**

### Mode No.

The mode number set on the mode setting switch is returned.

0x00 to 0x09

### DIP Switch

The DIP switch setting for five pins are returned.

| D7 | D6 | D5 | D4 | D3 | D2 | D1 | D0 |
|---|---|---|---|---|---|---|---|
| Always 0. | Always 0. | Always 0. | Always 0. | REGS | ESTP | DR-H | DR-L |

0: OFF, 1: ON

| ECHOBACK TEST | 0801 |
|---|---|

Executes an echoback test between specified nodes.

## Command Format

| MRC 08 | SRC 01 | Test data |
|---|---|---|
| 1B | 1B | 1 to 538B |

## Response Format

| MRC 08 | SRC 01 | MRES | SRES | Test data |
|---|---|---|---|---|
| 1B | 1B | 1B | 1B | 1 to 538B (Data specified in command) |

## End Codes (MRES/SRES)

| End code (hex) | Contents |
|---|---|
| 0000 | Normal completion |
| 1001 | The maximum permissible command length was exceeded. |
| 1002 | The command length is less than the minimum command length. (There is no test data.) |

## Parameter Details

### Test Data (Command)

The destination address is the address specified by the FINS header.

### Test Data (Response)

The test data sent in the command is returned from the remote node just as it is.

If the test data contents are different, an error occurred.

| READ ERROR LOG | 2102 |
|---|---|

Reads the CompoNet Master Unit error history.

## Command Format

| MRC 21 | SRC 02 | First record to read | Number of records to read |
|---|---|---|---|
| 1B | 1B | 2B | 2B |

## Response Format

| MRC 21 | SRC 02 | MRES | SRES | Max. number of records | Number of records stored | Number of records read | Error history records |
|---|---|---|---|---|---|---|---|
| 1B | 1B | 1B | 1B | 2B | 2B | 2B | 10B |

## End Codes (MRES/SRES)

| End code (hex) | Contents |
|---|---|
| 0000 | Normal completion |
| 1001 | The maximum permissible command length was exceeded. |
| 1002 | The command length is less than the minimum command length. |
| 1103 | An error occurred because an out-of-range address was specified. The beginning record number read is greater than the number of records currently stored. |
| 110B | The maximum response length was exceeded. The response exceeded the maximum frame length. |
| 110C | Another error occurred. The number of read records is 0. |

**Note** (1) If there is insufficient error history data for the number of records to read, all the records currently stored are returned and a normal completion (0000 hex) response is returned.

(2) If 0000 hex is specified for the beginning record number read, the response will be taken as normal completion (0000 hex) even if the number of records stored is 0000 hex. A response will be returned containing the maximum number of records, the number of records stored, and the number of records read.

## Parameter Details

### First Record to Read (Command)

Specify the first record number read in hexadecimal.

With the top record number (the oldest record) taken as 0000 hex, the first record number read is specified from 0000 to 003F (0 to 63 decimal).

### Number of Records to Read (Command)

Specify in hexadecimal the number of records to read. Any number from 0001 to 0035 (1 to 53 decimal) can be specified.

(Error history records beyond 53 must be read separately, with the First record to read set to 0035 hex.)

### Maximum Number of Records (Response)

The maximum number of error history records that can be stored is returned in hexadecimal.

With CompoNet Master Units, this number is always 0040 hex (64 decimal).

### Number of Records Stored (Response)

The number of error history records stored when the command is executed is returned in hexadecimal.

## Number of Records Read (Response)

The number of records actually read is returned in hexadecimal.

## Error History Records (Response)

1st byte 10th byte

| Error code | Detailed information | Minutes | Seconds | Day of month | Hour | Year | Mo. |
|---|---|---|---|---|---|---|---|
| 2B | 2B | 1B | 1B | 1B | 1B | 1B | 1B |

- Error Code and Detailed Information
  For details, refer to the list of error history codes.
- Minutes, Seconds, Day of month, Hour, Year, and Month
  The date and time when the error occurred are displayed in BCD.

| CLEAR ERROR LOG | 2103 |
|---|---|

Clears the CompoNet Master Unit error history.

## Command Format

| MRC<br>21 | SRC<br>03 |
|---|---|
| 1B | 1B |

## Response Format

| MRC<br>21 | SRC<br>03 | MRES | SRES |
|---|---|---|---|
| 1B | 1B | 1B | 1B |

## End Codes (MRES/SRES)

| End code (hex) | Contents |
|---|---|
| 0000 | Normal completion |
| 1001 | The maximum permissible command length was exceeded. |

| SEND EXPLICIT MESSAGE | 2802 |
|---|---|

Sends an explicit message.

## Command Format

| MRC 28 | SRC 02 | Destination (remote node address) | Service code | Class ID | Instance ID | Service data |
|---|---|---|---|---|---|---|
| 1B | 1B | 2B | 2B | 2B | 2B | To Slave Unit: 532B<br>To Master Unit: 532B |

## Response Format

- Normal Response to Explicit Message

| MRC 28 | SRC 02 | End code 0000 | No. of bytes received | Destination (remote node address) | Service code | Service data |
|---|---|---|---|---|---|---|
| 1B | 1B | 2B | 2B | 2B | 2B | To Slave Unit: 532B<br>To Master Unit: 532B |

- Error Response to Explicit Message

| MRC 28 | SRC 02 | End code 0000 | No. of bytes received | Destination (remote node address) | Service code 0094 | Error code |
|---|---|---|---|---|---|---|
| 1B | 1B | 2B | 2B | 2B | 2B | 2B |

- Explicit Message Send Failure or Timeout

| MRC 28 | SRC 02 | End code |
|---|---|---|
| 1B | 1B | 2B |

## End Codes (MRES/SRES)

| End code (hex) | Contents |
|---|---|
| 0000 | Normal completion |
| 0101 | The network for the local node is not operating. |
| 0201 | The network for the remote node is not operating. |
| 0204 | The message cannot be sent because the remote node is busy. |
| 0205 | Monitoring time expired with no response from the remote node. |
| 1001 | The maximum permissible command length was exceeded. |
| 1002 | The command length is less than the minimum command length. |
| 1004 | The command format is not suitable. |
| 1005 | There is a header error. (The destination address setting is illegal.) |
| 110B | The response exceeded the maximum response length. |
| 2211 | The Unit is busy. (The memory required for internal transmission processing cannot be reserved.) |
| 2609 | The required settings have not been made. |

## Error Codes

| End code (hex) | Contents |
|---|---|
| 0x02FF | A required resource was not available. |
| 0x08FF | A requested service was not supported. |
| 0x09FF | Attribute data is illegal. |
| 0x0BFF | The specified object was already in the requested state. |
| 0x0CFF | The requested service cannot be executed for the specified object. |
| 0x0EFF | An unchangeable attribute was specified. |
| 0x10FF | The requested service cannot be executed for the specified device. |
| 0x11FF | The response data is too long to be processed. |
| 0x13FF | There is insufficient data provided for processing. |
| 0x14FF | The attribute is undefined. |
| 0x15FF | Invalid data is included. |
| 0x16FF | The object is not implemented. |
| 0x19FF | The save operation failed. |
| 0x1F□□ | A header error occurred. (Detailed error information is stored in □□.) |
| 0x20FF | There is an error in the parameters. |
| 0x28FF | A class, instance, or attribute that is not implemented was specified for the member ID of the requested service. |

## Parameter Details

### Destination (Remote Node) Node Address

Provides the node address of a remote device.

| D15 | D14 | D13 | D12 | D11 | D10 | D9 | D8 | D7 | D6 | D5 | D4 | D3 | D2 | D1 | D0 |
|---|---|---|---|---|---|---|---|---|---|---|---|---|---|---|---|
| Classification<br>0x0: Master Unit<br>0x1: Normal Input or I/O Unit<br>0x2: Word Output Unit<br>0x4: Bit Input or I/O Unit<br>0x5: Bit Output Unit<br>0x7: Repeater Unit | | | | 0 | 0 | 0 | 0 | Master Unit: Always 0.<br>Word Slave Unit: 0 to 0x3F<br>Bit Slave Unit: 0 to 0x7F<br>Repeater Unit: 0 to 0x3F | | | | | | | |

### Service Code

Specifies the service code defined for the explicit message.

### Class ID

Specifies the remote class ID requesting the explicit message.

### Instance ID

Specifies the remote instance ID requesting the explicit message.

### Service Data

Specifies the data defined by the service code.

The effective number of bytes is 00 to 216 hex (534 bytes).

### Number of Bytes Received

The number of bytes of data received from the destination (remote node) node address onwards is returned.

### Destination (Remote Node) Node Address (Response)

The Slave Unit node address returned in the explicit message response is returned.

### Error Code

The error code defined by CompoNet is returned.

# Index


## A

addresses
  Slave Units, 103
applications
  precautions, xviii
automatic baud rate detection, 7

## B

Bit Slave Units
  data allocation, 124
bit-level distribution, 5
branch lines, 3
branches, 4
  multidrop connections, 4
  T-branch connections, 4

## C

cables
  cable types, 49
  connecting cables, 64
  DCA4-4F10 Standard Flat Cable, 50
  DCA5-4F10 Sheathed Flat Cable, 50
  extending the cable length, 55
  Flat Cable I, 3, 7, 14, 50, 78
  Flat Cable II, 3, 7, 14, 50, 83
  Round Cable I, 7, 14, 49
  Round Cable II, 7, 14, 50, 76
  selecting cable types, 52
CMND instruction, 153, 156, 158, 162, 164
communications
  cables, 3, 14
  connector, 40
  errors, 102
    stopping communications, 6
  indicators, 37
  mode number, 12
  power supply, 4, 58, 87, 90
  power supply connector, 40
  programless communications, 5
communications cables, xx
communications errors
  input data zero clear mode, 7
component names and functions, 35
CompoNet networks, 2
  features, 5
connection methods, 52
connectors
  Flat Connector, 14
  Flat Connector Plug, 15, 66, 75, 81
  Flat Connector Socket, 14, 75, 76, 78
  Open Type Connector, 17, 66
crimp terminals, xviii
CX-Integrator, 5, 20, 40, 109

## D

dimensions, 42
DIP switch
  baud rate setting, 40
  communications error communications stop mode setting, 40
  registration table enable, 40

## E

EC Directives, xx
electromagnetic fields, xx
EMC Directives, xx
EMI Standard, xx
EMS Standard, xx
error history, 178
  error code, 179
  error history table, 178
  save area, 179
errors
  exception processing, 174
  initialization errors, 173
  memory access processing, 176
  PLC monitoring, 174
  remote I/O communications, 175
  Repeater Units, 178
  Slave Units, 177
explicit message communications, 153
explicit messages, sending, 160

## F

FALS instruction, xvii
FINS command list, 155
FINS commands and responses
  command codes, 183
  overview, 154

FINS message communications, 152, 156
flags
  Communications Error Flags, 105, 132
  Communications Flags, 157
  Participation Flags, 105, 132

## G

ground
  precautions, xviii

## H

high-speed multi-point processing, 5

## I

I/O communications manual startup mode, 6
I/O power supply, 87, 99
I/O response time, 139
  maximum I/O response time, 140
  minimum I/O response time, 146
illegal configuration error, 110
installation, 60
  location, xvii

## L

locking devices
  precautions, xviii
Low Voltage Directive, xx

## M

Master Units, 3, 13, 52
  errors, 172
  specifications, 34
Memory Cards, 168
message communications
  explicit message communications, 153
  FINS message communications, 152
  overview, 152
  specifications, 153
message monitoring timer, 153
multidrop connections, 55

## N

network communications completion code, 157
node address types, 117
noise, xx

## O

online editing, xvii
operating environment precautions, xvii
outputs
  precautions, xvii

## P

peripheral devices
  communications cables, 14
  connectors, 14
  special tools, 17
  Terminating Resistor, 17
power supply, xx
  precautions, xviii, xix
  wiring, 87
precautions, xv
  applications, xviii
  general, xvi
  operating environment, xvii
  safety, xvi
preparing and mounting Flat Connectors, 75
programless communications, 5

## R

radiated emission, xx
radioactivity, xx
Registered Slave Participation Monitoring Time, 109
Registered Slave Participation Standby Mode, 110
registration tables, 6, 107
  creating, 109
remote I/O communications, 102
Repeater Units, 3, 5
replacing parts
  precautions, xix
replacing Units
  precautions, xix

## S

safety precautions, xvi
seven-segment display, 7, 37
short-circuits
  precautions, xviii
signals
  precautions, xviii
simple backup function, 168
Slave Units, 3
  address duplication error, 110
  allocation, 111
Smart Slave Unit Functions, 6
static electricity precautions, xx
status, 130
status area allocation, 129
switch settings, 39
  MODE switch, 39
  unit number switches, 39
system configuration patterns, 4

## T

Terminating Resistor, 3, 56, 72
trunk lines, 3

## U

unit number allocations, 115

## W

wiring
  trunk line-branch line formation, 44
  unrestricted wiring formation, 44
Word Slave Units
  data allocation, 119

# Revision History

A manual revision code appears as a suffix to the catalog number on the front cover of the manual.

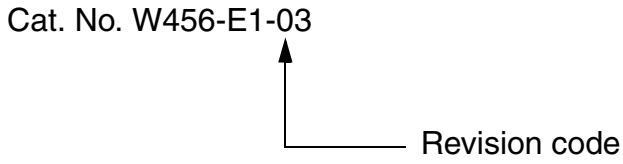


The following table outlines the changes made to the manual during each revision. Page numbers refer to the previous version.

| Revision code | Date | Revised content |
|---|---|---|
| 01 | September 2006 | Original production |
| 02 | December 2008 | Added information on conformance to shipbuilding standards. |
| 03 | March 2009 | Corrected mistakes, deleted some information on Slaves, and added simple backup function. |

**OMRON Corporation**
**Industrial Automation Company**
**Control Devices Division H.Q.**
**Network Devices Department**
Shiokoji Horikawa, Shimogyo-ku,
Kyoto, 600-8530 Japan
Tel: (81) 75-344-7116/Fax: (81) 75-344-7149

2-2-1 Nishikusatsu, Kusatsu-shi,
Shiga, 525-0035 Japan
Tel: (81) 77-565-5219/Fax: (81) 77-565-5569

***Regional Headquarters***
**OMRON EUROPE B.V.**
Wegalaan 67-69-2132 JD Hoofddorp
The Netherlands
Tel: (31)2356-81-300/Fax: (31)2356-81-388

**OMRON ELECTRONICS LLC**
One Commerce Drive Schaumburg,
IL 60173-5302 U.S.A.
Tel: (1) 847-843-7900/Fax: (1) 847-843-7787

**OMRON ASIA PACIFIC PTE. LTD.**
No. 438A Alexandra Road # 05-05/08 (Lobby 2),
Alexandra Technopark, Singapore 119967
Tel: (65) 6835-3011/Fax: (65) 6835-2711

**OMRON (CHINA) CO., LTD.**
Room 2211, Bank of China Tower,
200 Yin Cheng Zhong Road,
PuDong New Area, Shanghai, 200120, China
Tel: (86) 21-5037-2222/Fax: (86) 21-5037-2200

**Authorized Distributor:**

© OMRON Corporation 2006 All Rights Reserved.
In the interest of product improvement,
specifications are subject to change without notice.

Printed in Japan
0309 (0906)

OMRON Industrial Automation Global: **www.ia.omron.com**

**Cat. No. W456-E1-03**

Automatización Eléctrica
Especialistas en Automatización

Below is a list of articles with direct links to our shop Electric Automation Network where you can see:

- Quote per purchase volume in real time.
- Online documentation and datasheets of all products.
- Estimated delivery time enquiry in real time.
- Logistics systems for the shipment of materials almost anywhere in the world.
- Purchasing management, order record and tracking of shipments.

To access the product, click on the green button.

| Product | Code | Reference | Product link |
|---|---|---|---|
| E / S Remote, Unit 16 inputs PNP IP20 Componet | 226104 | CRT1-ID16-1 | Buy on EAN |
| CompoNet IP20 word slave unit, 16x transistor outputs, NPN, 0.5A, 24 VDC, screw terminals | 226105 | CRT1-OD16 | Buy on EAN |
| CompoNet IP20 word slave unit, 16x transistor outputs, PNP, 0.5A, 24 VDC, screw terminals | 226106 | CRT1-OD16-1 | Buy on EAN |
| E / S Remote, Unit 16 inputs NPN IP20 Componet | 226103 | CRT1-ID16 | Buy on EAN |
| E / S Remote, Unit 2 Output NPN Componet eCON IP20 | 226096 | CRT1B-OD02S | Buy on EAN |
| E / S Remote, Unit 2 Inputs NPN Componet eCON IP20 | 226095 | CRT1B-ID02S | Buy on EAN |
| E / S Remote, Repeater Componet | 226092 | CRS1-RPT01 | Buy on EAN |
| E / S Remote, Unit Componet 16 Outputs Relay 3 Terminals | 237472 | CRT1-ROS16 | Buy on EAN |
| E / S Remote, Cable Componet Plano 4 Threads IP54 (100m.) | 226111 | DCA5-4F10 | Buy on EAN |
| E / S Remote, Componet Y connector IP20 | 226115 | DCN4-MD4 | Buy on EAN |
| E / S Remote, Componet connector screw terminals IP20 | 226114 | DCN4-TB4 | Buy on EAN |