At the end of this document you will find links to products related to this catalog. You can go directly to our shop by clicking HERE. HERE

NX-S□

NX integrated safety

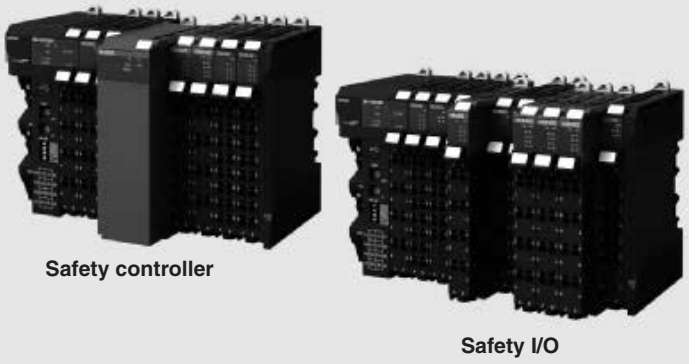

Integrated safety into machine automation

- The safety controller meets Category 4, PLe according to the ISO 13849-1 and SIL3 according to the IEC 61508
- Flexible system lets you freely mix safety controller and safety I/O units with standard NX I/O
- High connectivity I/O units for direct connection to a variety of devices
- Scalable CPUs for 32 or 128 safety connections
- Up to 8 safety input points per unit
- Safety function blocks conforming with IEC 61131-3 standard programming
- PLCopen function blocks for safety
- Integration in one software, Sysmac Studio

System configuration

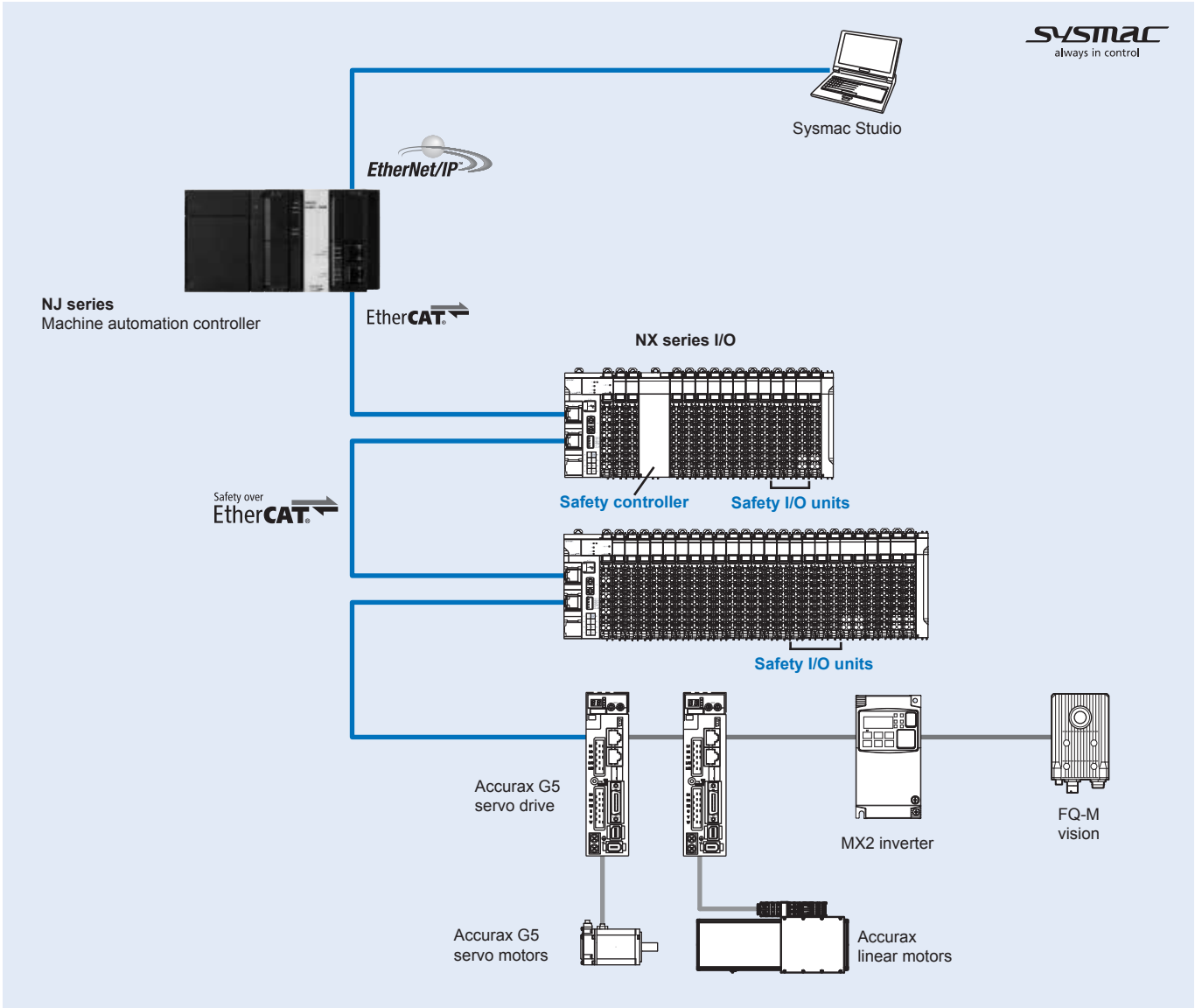

Specifications

Regulations and standards

Certification body	Standards	
TÜV Rheinland[*1]	EN ISO 13849-1: 2008 + AC: 2009 EN ISO 13849-2: 2012 IEC 61508 parts 1-7: 2010 EN 62061: 2005 EN 61131-2: 2007 EN ISO 13850: 2008 EN 60204-1: 2006 + A1: 2009 + AC: 2010	EN 61000-6-2: 2005 EN 61000-6-4: 2007 NFPA 79: 2012 ANSI RIA 15.06-1999 ANSI B11.19-2010 UL1998 IEC 61326-3-1: 2008
UL	cULus: Listed (UL508) and ANSI/ISA 12.12.01	

*1. Certification was received for applications in which OMRON FSoE devices are connected to each other.

The NX-series Safety Control Units allow you to build a safety control system that meets the following standards.

- Requirements for SIL 3 (Safety Integrity Level 3) in IEC 61508, EN 62061, Safety Standard for Safety Instrumented Systems (Functional Safety of Electrical/Electronic/Programmable Electronic Safety-related Systems)
- Requirements for PLe (Performance Level e) and for safety category 4 in EN ISO13849-1

The NX-series Safety Control Units are also registered for C-Tick and KC compliance.

General specifications

Item		Specifications
Enclosure		Mounted in a panel
Grounding method		Ground to 100 Ω or less
Operating environment	**Ambient operating temperature**	0 to 55°C
	Ambient operating humidity	10% to 95% (with no condensation or icing)
	Atmosphere	No corrosive gases
	Ambient storage temperature	–25 to 70°C (with no condensation or icing)
	Altitude	2,000 m max.
	Pollution degree	2 or less: Conforms to JIS B3502 and IEC 61131-2
	Noise immunity	Compliant with IEC 61131-2 2 kV on power supply line (compliant with IEC 61000-4-4)
	Insulation class	Class III (SELV)
	Overvoltage category	Category II: Conforms to JIS B3502 and IEC 61131-2
	EMC immunity level	Zone B
	Vibration resistance	Compliant with IEC 60068-2-6 5 to 8.4 Hz, 3.5-mm amplitude, 8.4 to 150 Hz, acceleration: 9.8 m/s^2 for 100 minutes each in X, Y and Z directions (time coefficient: 10 minutes x coefficient factor 10 = total time 100 min.)
	Shock resistance	Compliant with IEC 60068-2-27 147 m/s^2, 3 times each in X, Y and Z directions
	Insulation resistance	20 MΩ between isolated circuits (at 100 VDC)
	Dielectric strength	510 VAC for 1 min between isolated circuits, leakage current: 5 mA max.
Installation method		DIN track (IEC 60715 TH35-7.5/TH35-15)
Applicable standards		EN ISO 13849-1, 13849-2: 2008 PLe/Safety Category 4 IEC 61508: 2010 SIL 3, EN 62061: 2005 SIL CL3 UL 1988 cULus: listed (UL508), ANSI/ISA 12.12.01 EC: EN 61131-2, C-Tick, KC: KC Registration

Nomenclature

Safety controller unit

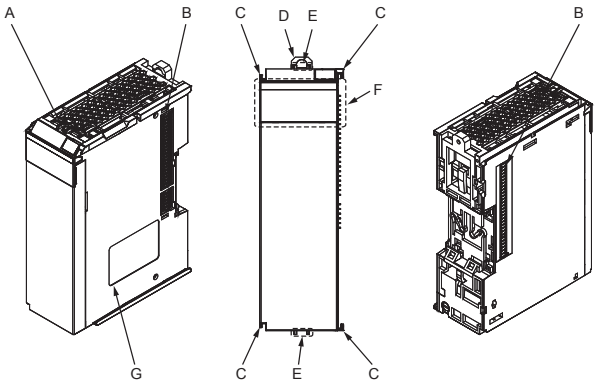

Symbol	Name	Function
A	Marker installation location	These are where markers are attached. OMRON markers are attached when the unit is shipped. You can also attach commercially available markers.
B	NX bus connector	This is the NX-series bus connector. It is used to connect an NX-series safety I/O unit or other NX unit.
C	Unit hookup guide	This guide is used to connect the unit to another unit.
D	DIN track mounting hooks	These hooks are used for installation on a DIN track.
E	Unit pull out tabs	Place your fingers on these tabs to pull out the unit.
F	Indicators	The indicators show the current operating status of the NX unit and signal I/O status. The number of indicators depend on the NX unit.
G	Unit specifications	The specifications of the NX unit are given here.

Safety controller unit

Item	Specifications	
Model	**NX-SL3300**	**NX-SL3500**
Name	Safety CPU unit	
Maximum number of safety I/O points	256 points	1024 points
Program capacity	512 KB	2048 KB
Number of safety master connections	32	128
External connection terminals	None	
Unit power consumption	0.90 W max.	
I/O power supply system	Not supplied	
I/O current consumption	No consumption	
Current capacity of I/O power supply terminal	No I/O power supply terminals	
I/O refreshing method	Free-run refreshing	
Dimensions (W × H × D)	30 × 100 × 71	
Weight	75 g max.	

Safety I/O unit

Safety input unit

Item	Specifications	
Model	**NX-SIH400**	**NX-SID800**
Name	Advanced safety input unit	Safety input unit
Number of safety inputs	4 points	8 points
Number of test outputs	2 points	
Internal I/O common	Sinking (PNP)	
Rated input voltage	24 VDC	
OMRON special safety input devices	Can be connected	Cannot be connected
Number of safety slave connections	1	
Safety input current	4.5 mA	3.0 mA
Safety input ON voltage	11 VDC min.	15 VDC min.
Safety input OFF voltage/OFF current	5 VDC max., 1 mA max.	
Test output type	Sourcing outputs (PNP)	
Rated current of test outputs	25 mA max.	50 mA max.
Residual ON voltage of test outputs	1.2 V max.	
Leakage current of test outputs	0.1 mA max.	
Dielectric strength	510 VAC for 1 min between isolated circuits, leakage current: 5 mA max.	
Insulation resistance	20 MΩ min. between isolated circuits (at 100 VDC)	
Isolation method	Photocoupler isolation	
Unit power consumption	0.70 W max.	0.75 W max.
I/O power supply system	Power supplied through the NX bus	
I/O current consumption	20 mA max.	
Current capacity of I/O power supply terminal	No applicable terminals	
I/O refreshing method	Free-run refreshing	
Terminal block type	Screwless push-in terminals 8 terminals (A + B)	Screwless push-in terminals 16 terminals (A + B)
Dimensions (W × H × D)	12 × 100 × 71	
Weight	70 g max.	
Maximum cable length	Devices with mechanical contacts: 400 m, other devices: 100 m	
Protective functions	Overvoltage protection circuit and ground fault detection (test outputs)	

Circuit layout

NX-SIH400

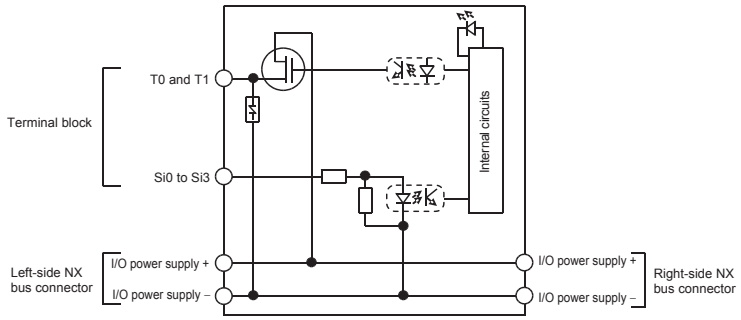

NX-SID800

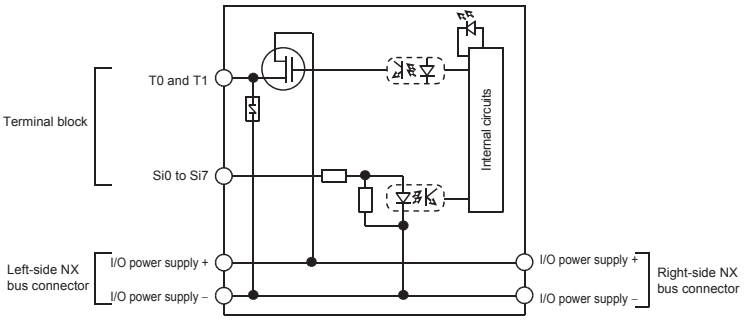

Terminal wiring

NX-SIH400

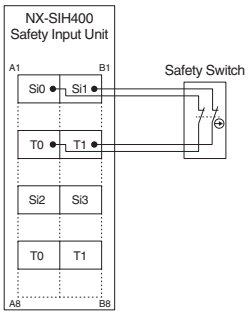

NX-SID800

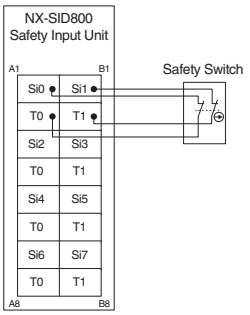

Safety output unit

Item	Specifications	
Model	**NX-SOH200**	**NX-SOD400**
Name	High-current safety output unit	Safety output unit
Number of safety outputs	2 points	4 points
Internal I/O common	Sourcing outputs (PNP)	
Maximum load current	2.0 A/point, 4.0 A/unit at 40ºC, 2.5 A/unit at 55ºC The maximum load current depends on the installation orientation and ambient temperature.	0.5 A/point and 2.0 A/unit
Rated voltage	24 VDC	
Number of safety slave connections	1	
Safety output ON residual voltage	1.2 V max.	
Safety output OFF residual voltage	2 V max.	
Safety output leakage current	0.1 mA max.	
Dielectric strength	510 VAC for 1 min between isolated circuits, leakage current: 5 mA max.	
Insulation resistance	20 MΩ min. between isolated circuits (at 100 VDC)	
Isolation method	Photocoupler isolation	
Unit power consumption	0.70 W max.	0.75 W max.
I/O power supply system	Power supplied through the NX bus	
I/O current consumption	40 mA max.	60 mA max.
Current capacity of I/O power supply terminal	IOG: 2 A max./terminal	IOG (A3 and B3): 2 A max./terminal, IOG (A7 and B7): 0.5 A max./terminal
I/O refreshing method	Free-run refreshing	
Terminal block type	Screwless push-in terminals 8 terminals (A + B)	
Dimensions (W × H × D)	12 × 100 × 71	
Weight	65 g max.	
Maximum cable length	100 m	
Protective functions	Overvoltage protection circuit and ground fault detection	

Circuit layout

NX-SOH200

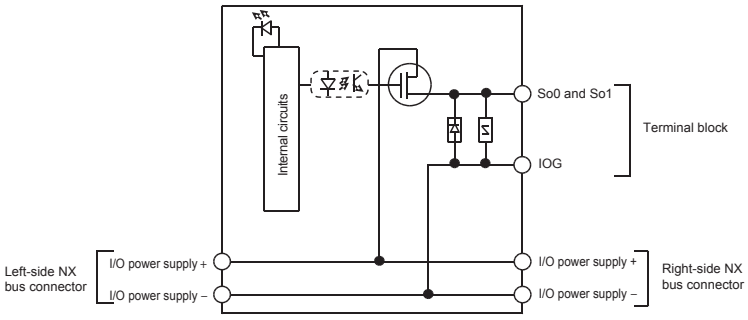

NX-SOD400

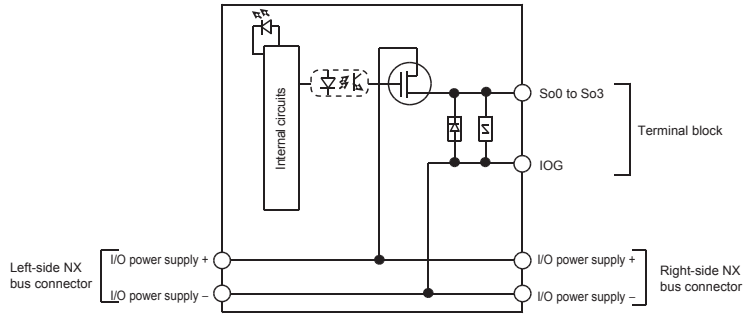

Terminal wiring

NX-SOH200

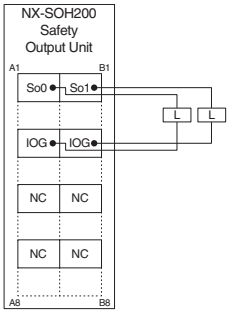

NX-SOD400

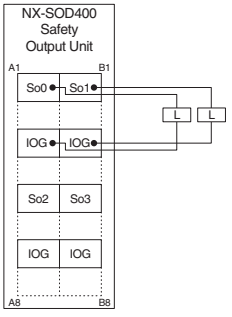

Dimensions

EtherCAT coupler unit

NX-ECC202

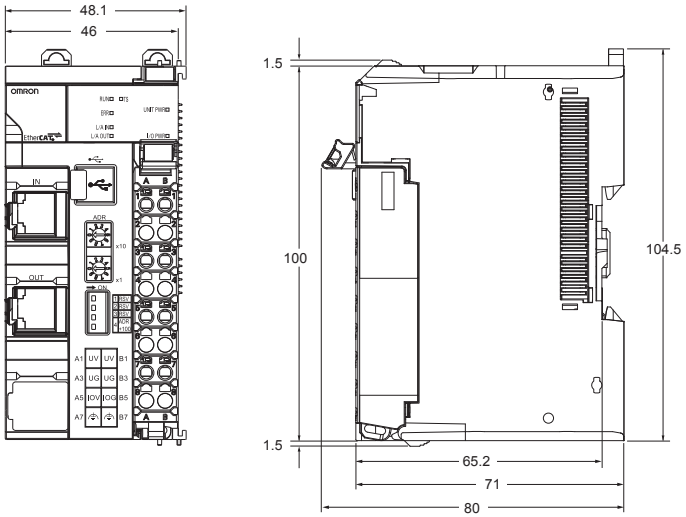

Safety controller unit

NX-SL3300/SL3500

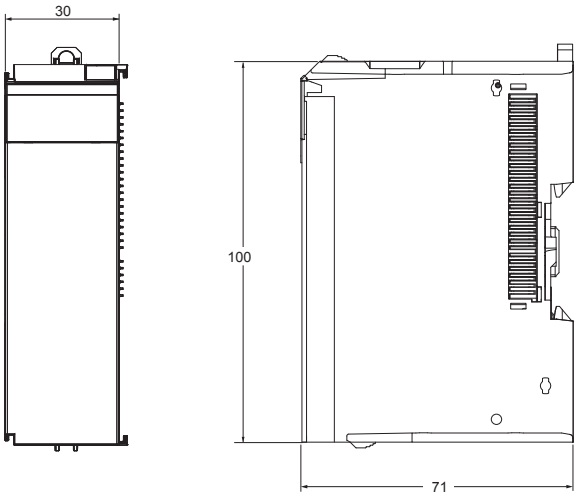

Safety I/O unit

12 mm width

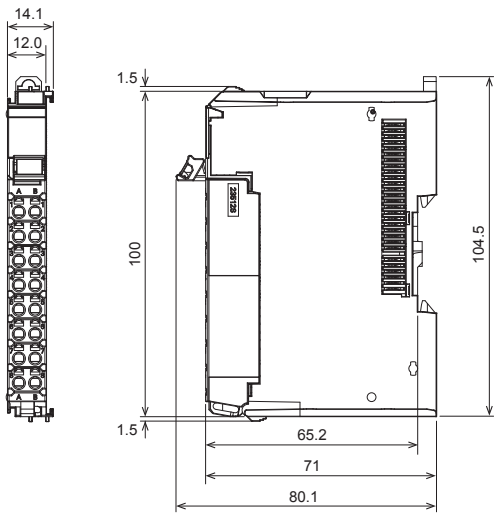

End cover unit (included with the EtherCAT coupler unit)

NX-END01

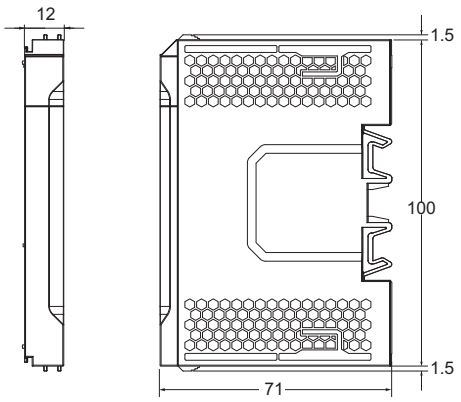

Ordering information

EtherCAT coupler unit

Type	Signal type	Specifications	Channels	Max. I/O power supply	Width	Model
EtherCAT communication coupler (firmware version 1.1 or higher)	EtherCAT slave	Up to 63 I/O units Max. 1024 bytes in + 1024 bytes out Supports distributed clock	2	10.0 A	46 mm	NX-ECC202

Safety controller unit

Type	Safety master connections	Safety I/O points	Program capacity	Width	Model
Safety CPU	32	256 points max.	512 KB	30 mm	NX-SL3300
	128	1024 points max.	2048 KB	30 mm	NX-SL3500

Safety I/O unit

Safety input unit

Type	Signal type	Safety slave connections	Safety inputs	Test outputs	Width	Model
Safety input	PNP type	1	4 points	2 points	12 mm	NX-SIH400
			8 points	2 points	12 mm	NX-SID800

Safety output unit

Type	Signal type	Safety slave connections	Safety outputs	Width	Model
Safety output	PNP type	1	2 points	12 mm	NX-SOH200
			4 points	12 mm	NX-SOD400

System unit

Type	Specifications	Width	Model
End cover	Included with communication coupler	12 mm	NX-END01

Accessories

Name	Specifications	Model
Terminal block coding pins	For 10 units (Terminal block: 30 pins, unit: 30 pins)	NX-AUX02
Terminal block	Replacement front connector with 8 wiring terminals (A + B)	NX-TBA082
	Replacement front connector with 16 wiring terminals (A + B)	NX-TBA162

Computer software

Name	Model
Sysmac Studio version 1.08 or higher*1	SYSMAC-SE2□□□

*1. Please contact your OMRON representative for compatibility between the Sysmac Studio version 1.07 or lower and NX I/O units.

ALL DIMENSIONS SHOWN ARE IN MILLIMETERS.
To convert millimeters into inches, multiply by 0.03937. To convert grams into ounces, multiply by 0.03527.

Cat.No.SysCat_I183E-EN-02A In the interest of product improvement, specifications are subject to change without notice.

Automatización Eléctrica
Especialistas en Automatización

Below is a list of articles with direct links to our shop Electric Automation Network where you can see:

- Quote per purchase volume in real time.
- Online documentation and datasheets of all products.
- Estimated delivery time enquiry in real time.
- Logistics systems for the shipment of materials almost anywhere in the world.
- Purchasing management, order record and tracking of shipments.

To access the product, click on the green button.

Product	Code	Reference	Product link
Integrated Safety, Security Controller NX - Up to 32 units or 256 Points 512 KB	393736	NX-SL3300	Buy on EAN
Integrated Safety, Unit NX - 4 Digital Inputs Universal Security. PNP	393738	NX-SIH400	Buy on EAN
Machine I / O, accessory NX - Pines coding (for 10 units NX)	375660	NX-AUX02	Buy on EAN
Integrated Safety, Unit NX - 2 digital outputs Security. PNP. 2 A / point 4 A / total	377520	NX-SOH200	Buy on EAN
Integrated Safety, Unit NX - 4 Digital Outputs Security. PNP. 0.5 A / point 2 A / total	377518	NX-SOD400	Buy on EAN
Integrated Safety, Unit NX - 8 digital inputs Security. PNP	377519	NX-SID800	Buy on EAN
Machine I / O, Unit NX - Top End	375657	NX-END01	Buy on EAN
Machine I / O, Header NX - EtherCAT Bus 10A E / S, 250µs	380148	NX-ECC202	Buy on EAN