At the end of this document you will find links to products related to this catalog. You can go directly to our shop by clicking HERE. HERE

R88D-KN□□□-ECT-L, R88D-KT□□□-L

Accurax G5 linear drive

Accurate motion control in a compact size servo drive family. EtherCAT and safety built-in.

- Ironless and iron-core motor types
- EtherCAT and analogue/pulse servo drive models
- Safety conforming ISO13849-1 PL-d
- High-response frequency of 2 kHz
- A/B line-driver and SinCos encoder type options
- Real time auto-tuning
- Advanced tuning algorithms (Anti-vibration function, torque feedforward, disturbance observer)

Ratings

- Iron-core motors – 48 to 760 N (2,000 N peak force)
- Ironless motors – 29 to 423 N (2,100 N peak force)

System configuration

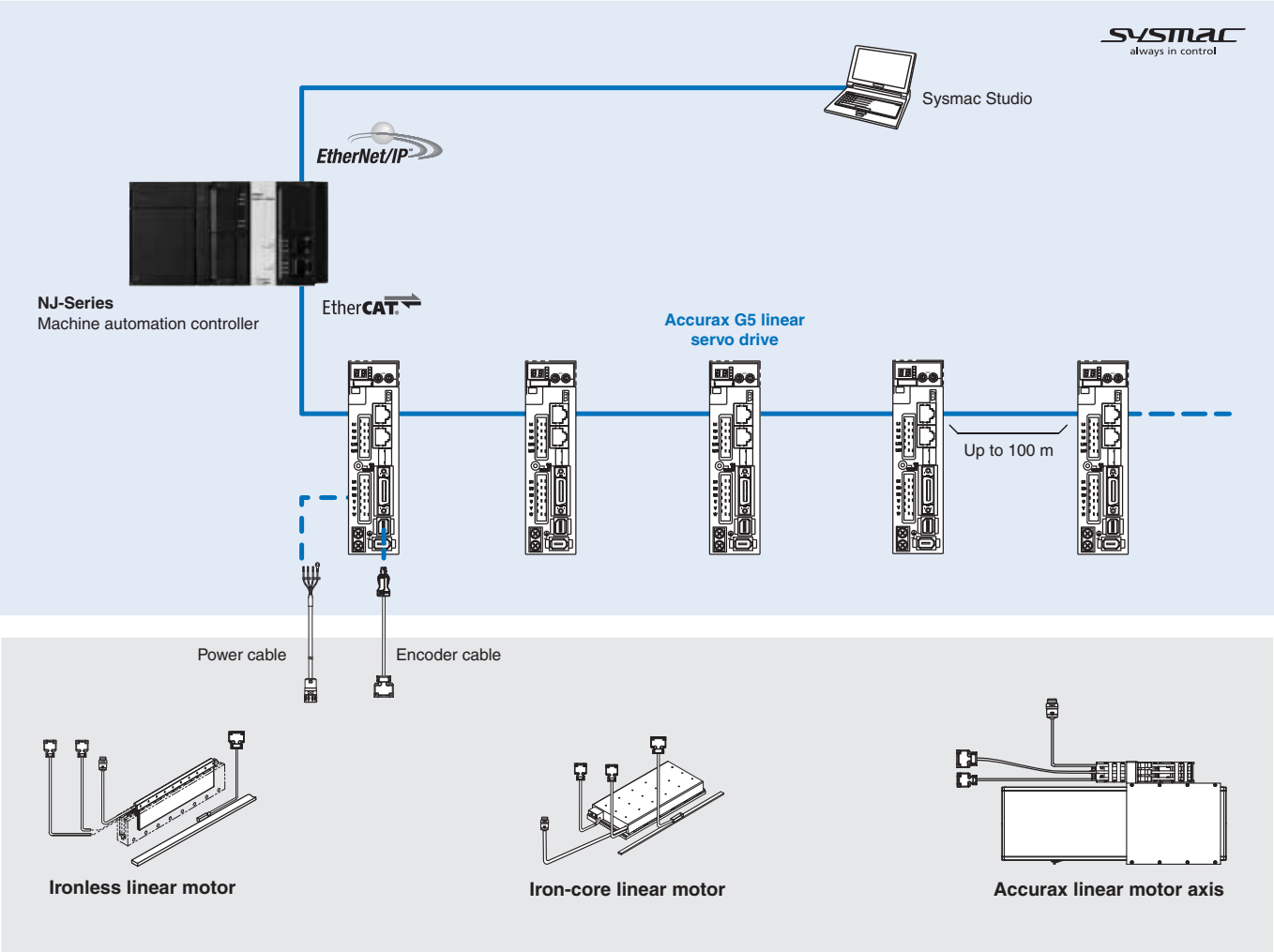

Servo motor supported

Linear servo motor					Accurax G5 linear drive			
Type	Rated force	Peak force	Model		230 V (EtherCAT)	400 V (EtherCAT)	200 V (analogue/pulse)	400 V (analogue/pulse)
Linear motor coil								
R88L-EC-FW-□ Iron-core motors  230 V/400 V	48 N	105 N	Coil without connectors	R88L-EC-FW-0303-ANPC	R88D-KN02H-ECT-L	R88D-KN06F-ECT-L	R88D-KT02H-L	R88D-KT06F-L
	96 N	210 N		R88L-EC-FW-0306-ANPC	R88D-KN04H-ECT-L	R88D-KN10F-ECT-L	R88D-KT04H-L	R88D-KT10F-L
	160 N	400 N		R88L-EC-FW-0606-ANPC	R88D-KN08H-ECT-L	R88D-KN15F-ECT-L	R88D-KT08H-L	R88D-KT15F-L
	240 N	600 N		R88L-EC-FW-0609-ANPC	R88D-KN10H-ECT-L	R88D-KN20F-ECT-L	R88D-KT10H-L	R88D-KT20F-L
	320 N	800 N		R88L-EC-FW-0612-ANPC	R88D-KN15H-ECT-L	R88D-KN30F-ECT-L	R88D-KT15H-L	R88D-KT30F-L
	608 N	1,600 N		R88L-EC-FW-1112-ANPC	R88D-KN15H-ECT-L	R88D-KN30F-ECT-L	R88D-KT15H-L	R88D-KT30F-L
	760 N	2,000 N		R88L-EC-FW-1115-ANPC	R88D-KN15H-ECT-L	R88D-KN30F-ECT-L	R88D-KT15H-L	R88D-KT30F-L
	48 N	105 N	Coil with connectors	R88L-EC-FW-0303-APLC	R88D-KN02H-ECT-L	R88D-KN06F-ECT-L	R88D-KT02H-L	R88D-KT06F-L
	96 N	210 N		R88L-EC-FW-0306-APLC	R88D-KN04H-ECT-L	R88D-KN10F-ECT-L	R88D-KT04H-L	R88D-KT10F-L
	160 N	400 N		R88L-EC-FW-0606-APLC	R88D-KN08H-ECT-L	R88D-KN15F-ECT-L	R88D-KT08H-L	R88D-KT15F-L
	240 N	600 N		R88L-EC-FW-0609-APLC	R88D-KN10H-ECT-L	R88D-KN20F-ECT-L	R88D-KT10H-L	R88D-KT20F-L
	320 N	800 N		R88L-EC-FW-0612-APLC	R88D-KN15H-ECT-L	R88D-KN30F-ECT-L	R88D-KT15H-L	R88D-KT30F-L
	608 N	1600 N		R88L-EC-FW-1112-APLC	R88D-KN15H-ECT-L	R88D-KN30F-ECT-L	R88D-KT15H-L	R88D-KT30F-L
	760 N	2000 N		R88L-EC-FW-1115-APLC	R88D-KN15H-ECT-L	R88D-KN30F-ECT-L	R88D-KT15H-L	R88D-KT30F-L
R88L-EC-GW-□ Ironless motors 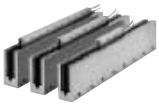 230 V	29 N	100 N	Coil without connectors	R88L-EC-GW-0303-ANPS	R88D-KN02H-ECT-L	–	R88D-KT02H-L	–
	58 N	200 N		R88L-EC-GW-0306-ANPS	R88D-KN08H-ECT-L	–	R88D-KT08H-L	–
	87 N	300 N		R88L-EC-GW-0309-ANPS	R88D-KN10H-ECT-L	–	R88D-KT10H-L	–
	70 N	240 N		R88L-EC-GW-0503-ANPS	R88D-KN02H-ECT-L	–	R88D-KT02H-L	–
	140 N	480 N		R88L-EC-GW-0506-ANPS	R88D-KN04H-ECT-L	–	R88D-KT04H-L	–
	210 N	720 N		R88L-EC-GW-0509-ANPS	R88D-KN08H-ECT-L	–	R88D-KT08H-L	–
	141 N	700 N		R88L-EC-GW-0703-ANPS	R88D-KN04H-ECT-L	–	R88D-KT04H-L	–
	282 N	1,400 N		R88L-EC-GW-0706-ANPS	R88D-KN08H-ECT-L	–	R88D-KT08H-L	–
	423 N	2,100 N		R88L-EC-GW-0709-ANPS	R88D-KN10H-ECT-L	–	R88D-KT10H-L	–
	29 N	100 N	Coil with connectors	R88L-EC-GW-0303-APLS	R88D-KN02H-ECT-L	–	R88D-KT02H-L	–
	58 N	200 N		R88L-EC-GW-0306-APLS	R88D-KN08H-ECT-L	–	R88D-KT08H-L	–
	87 N	300 N		R88L-EC-GW-0309-APLS	R88D-KN10H-ECT-L	–	R88D-KT10H-L	–
	70 N	240 N		R88L-EC-GW-0503-APLS	R88D-KN02H-ECT-L	–	R88D-KT02H-L	–
	140 N	480 N		R88L-EC-GW-0506-APLS	R88D-KN04H-ECT-L	–	R88D-KT04H-L	–
	210 N	720 N		R88L-EC-GW-0509-APLS	R88D-KN08H-ECT-L	–	R88D-KT08H-L	–
	141 N	700 N		R88L-EC-GW-0703-APLS	R88D-KN04H-ECT-L	–	R88D-KT04H-L	–
	282 N	1,400 N		R88L-EC-GW-0706-APLS	R88D-KN08H-ECT-L	–	R88D-KT08H-L	–
	423 N	2,100 N		R88L-EC-GW-0709-APLS	R88D-KN10H-ECT-L	–	R88D-KT10H-L	–
Accurax linear motor axis								
R88L-EA-AF-□ Linear motor axIs 	48 N	105 N	R88L-EA-AF-0303-□		R88D-KN02H-ECT-L	R88D-KN10F-ECT-L	R88D-KT02H-L	R88D-KT10F-L
	96 N	210 N	R88L-EA-AF-0306-□		R88D-KN04H-ECT-L	R88D-KN10F-ECT-L	R88D-KT04H-L	R88D-KT10F-L
	160 N	400 N	R88L-EA-AF-0606-□		R88D-KN08H-ECT-L	R88D-KN15F-ECT-L	R88D-KT08H-L	R88D-KT15F-L
	240 N	600 N	R88L-EA-AF-0609-□		R88D-KN10H-ECT-L	R88D-KN20F-ECT-L	R88D-KT10H-L	R88D-KT20F-L
	320 N	800 N	R88L-EA-AF-0612-□		R88D-KN15H-ECT-L	R88D-KN30F-ECT-L	R88D-KT15H-L	R88D-KT30F-L
	608 N	1,600 N	R88L-EA-AF-1112-□		R88D-KN15H-ECT-L	R88D-KN30F-ECT-L	R88D-KT15H-L	R88D-KT30F-L
	760 N	2,000 N	R88L-EA-AF-1115-□		R88D-KN15H-ECT-L	R88D-KN30F-ECT-L	R88D-KT15H-L	R88D-KT30F-L

Note: The servo drive – motor combination has been done assuming the lower PWM frequency current. More silent operation may be obtained by selecting the higher PWM frequency in combination with one bigger servo drive size.

Type designation

Servo drive

R88D-KN01H-ECT-L

- Accurax G5 Series servo drive
- Drive type
  N: Network type
- Capacity and voltage
- Model
  ECT: EtherCAT comms
- Linear drive

Voltage	Code	Output
230 V	01H	100 W
	02H	200 W
	04H	400 W
	08H	750 W
	10H	1 kW
	15H	1.5 kW
400 V	06F	600 W
	10F	1.0 kW
	15F	1.5 kW
	20F	2.0 kW
	30F	3.0 kW

Servo drive specifications

Single-phase, 230 V

Linear servo drive type			R88D-K□	02H□□□-L	04H□□□-L	08H□□□-L	10H□□□-L	15H□□□-L
Applicable linear servo motor			R88L-EC-	FW-0303	FW-0306	FW-0606	FW-0609	FW-0612
				GW-0303	GW-0506	GW-0306	GW-0309	FW-1112
				–	GW-0703	GW-0509	GW-0709	–
				–	–	GW-0706	–	–
Basic specifications	Power		W	200	400	750	1,000	1,500
	Continuous output current		Arms	1.60	1.5	2.4	4.1	5.7
	Max. output current		Arms	4.89	4.5	7.2	12.3	17
	Input power	Main circuit		Single-phase/3-phase, 200 to 240 VAC + 10% to –15% (50/60 Hz)				
	Supply	Control circuit		Single-phase, 200 to 240 VAC + 10% to –15% (50/60 Hz)				
	Control method			IGBT-driven PWM method, sinusoidal drive				
	Feedback			Serial encoder (incremental/absolute value)				
	Conditions	Usage/storage temperature		0 to 55°C/–20 to 65°C				
		Usage/storage humidity		90% RH or less (non-condensing)				
		Altitude		1,000 m or less above sea level				
		Vibration/shock resistance	(max.)	5.88 m/s^2 10 to 60 Hz (Continuous operation at resonance point is not allowed)/19.6 m/s^2				
	Configuration			Base mounted				
	Approx. weight		Kg	0.8	1.1	1.6	1.8	

Three-phase, 400 V

Linear servo drive type			R88D-K□	06F□□□-L	10F□□□-L	15F□□□-L	20F□□□-L	30F□□□-L
Applicable linear servo motor			R88L-EC-	FW-0303	FW-0303	FW-0606	FW-0609	FW-0612
				–	FW-0306	–	–	FW-1112
Basic specifications	Power		kW	0.6	1	1.5	2	3
	Continuous output current		Arms	1.5	1.5	2.8	4.7	5.9
	Max. output current		Arms	4.5	4.5	8.4	14.1	17.7
	Input power	Main circuit		3-phase, 380 to 480 VAC + 10% to –15% (50/60Hz)				
	Supply	Control circuit		24 VDC ±15%				
	Control method			IGBT-driven PWM method, sinusoidal drive				
	Feedback	Serial encoder		Incremental or absolute encoder				
	Conditions	Usage/storage temperature		0 to 55°C/–20 to 65°C				
		Usage/storage humidity		90% RH or less (non-condensing)				
		Altitude		1,000 m or less above sea level				
		Vibration/shock resistance		5.88 m/s^2 10 to 60 Hz (Continuous operation at resonance point is not allowed)/19.6 m/s^2				
	Configuration			Base mounted				
	Approx. weight		Kg	1.9			2.7	4.7

General specifications (for EtherCAT servo drives)

Performance		Frequency characteristics	2 kHz
EtherCAT interface	Command input		EtherCAT commands (for sequence, motion, data setting/reference, monitor, adjustment, and other commands).
	CiA402 Drive profile		Cyclic synchronous position mode Cyclic synchronous velocity mode Cyclic synchronous torque mode Touch probe function Torque limit function Homing mode
I/O signal	Sequence input signal		– Multi-function input × 8 by parameter setting (forward/reverse drive prohibition, emergency stop, external latch, origin proximity, forward/reverse torque limit, general purpose monitor inputs).
	Sequence output signal		1 × servo drive error output 2 × multi-function outputs by parameters setting (servo ready, brake release, speed limit detection, force limit detection, zero speed detection, warning output, position completion, error clear attributed, programmable output, speed detection, position command status, speed command status)
Integrated functions	USB communications	Interface	Personal computer/connector mini-USB
		Communications standard	Compliant with USB 2.0 standard
		Function	Parameter setting, status monitoring and tuning
	EtherCAT communications	Communications protocol	IEC 61158 Type 12, IEC 61800-7
		Physical layer	100BASE-TX (IEEE802.3)
		Connectors	RJ45 × 2 ECAT IN: EtherCAT input × 1 ECAT OUT: EtherCAT output × 1
		Communications media	Category 5 or higher (cable with double, aluminium tape and braided shielding is recommended)
		Communications distance	Distance between nodes: 100 m max.
		LED indicators	RUN × 1 ERR × 1 L/A IN (Link/Activity IN) × 1 L/A OUT (Link/activity OUT) × 1
	Autotuning		Automatic motor parameter setting. One parameter rigidity setting. Inertia detection.
	Dynamic brake (DB)		Built-in. Operates during main power OFF, servo alarm, servo OFF or overtravel.
	Regenerative processing		Internal resistor included in models from 600 W to 5 kW. Regenerative resistor externally mounted (option).
	Overtravel (OT) prevention function		DB stop, deceleration stop or coast to stop during P-OT, N-OT operation
	Encoder divider function		Optional division possible
	Protective functions		Overcurrent, overvoltage, undervoltage, overspeed, overload, encoder error, overheat ...
	Analogue monitor functions for supervision		Analogue monitor of motor speed, speed reference, torque reference, command following error, analogue input ... The monitoring signals to output and their scaling can be specified with parameters. Number of channels: 2 (Output voltage: ±10V DC)
	Panel operator	Display functions	2 × digit 7-segment LED display shows the drive status, alarm codes, parameters ...
		Switches	2 × rotary switches for setting the node address
	CHARGE lamp		Lits when the main circuit power supply is turned ON.
	Safety terminal	Functions	Safety Torque OFF function to cut off the motor current and stop the motor. Output signal for failure monitoring function.
		Conformed standards	EN ISO13849-1:2008 (PL- d, Performance Level d), IEC61800-5 -2:2007 (function STO, Safe Torque OFF), EN61508:2001 (Safety Integrity Level 2, SIL2), EN954-1:1996 (CAT3).
	Encoder feedback		A/B line-driver encoder and SinCos to serial conversion available. Optional hall and temperature sensors via serial converter.

General specifications (for analogue/pulse servo drives)

Control mode				6 modes selectable by parameter: (1) position control, (2) velocity control, (3) force control, (4) position/velocity control, (5) position/force control, (6) velocity/force control.
Speed/force control	**Performance**		Frequency characteristics	2 kHz
			Speed zero clamp	Preset velocity command can be clamped to zero by the speed zero clamp input.
			Soft start time setting	0 to 1 s (acceleration, deceleration can be set separately). S-curve acceleration/deceleration is also available.
	Input signal	Speed control	Speed reference voltage	10 VDC at rated speed: set at delivery (the scale and polarity can be set by parameters)
			Force limit	10 VDC at rated force (force can be limited separately in positive/negative direction).
			Preset speed control	Preset speed is selectable from 6 internal settings by digital inputs.
		Force control	Force reference voltage	3 VDC at rated force: set at delivery (the scale and polarity can be set by parameters).
			Speed limit	Speed limit can be set by parameter.
Position control	Input signal	Command pulse	Input pulse type	Sign + pulse train, 90° phase displacement 2-phase pulse (A-phase + B-phase) or CCWLD/CWLD pulse train
			Input pulse frequency	4 Mpps max. (200 Kpps max. at open collector).
			Command pulse scaling (Electronic Gear)	Applicable scaling ratio: 1/1,000 to 1,000 Any value of $1\text{-}2^{30}$ can be set for numerator (encoder resolution) and denominator (command pulse resolution per motor revolution). The combination has to be within the range shown above.
I/O signal	Position signal output			A-phase, B-phase, Z-phase line driver output and Z-phase open-collector output.
	Sequence input signal			– Multi-function input x 10 by parameter setting (servo ON, control mode switching, forward/reverse drive prohibition, vibration filter switching, gain switching, electronic gear switching, error counter reset, pulse prohibition, alarm reset, internal speed selection, force limit switching, zero speed, emergency stop, mass ratio switching, velocity/force command sign).
	Sequence output signal			It is possible to output six types of signal form incl.: brake release, servo ready, servo alarm, positioning complete, motor rotation speed detection, force limit detection, zero speed detection, speed coincidence detection, warning, position command status, speed limit detection, speed command status, alarm clear.

Integrated functions	USB Communications	Interface	Personal computer/connector mini-USB
		Communications standard	Compliant with USB 2.0 standard
		Function	Parameter setting, status monitoring and tuning
	Autotuning		Automatic motor parameter setting. One parameter rigidity setting. Inertia detection.
	Dynamic brake (DB)		Built-in. Operates during main power OFF, servo alarm, servo OFF or overtravel.
	Regenerative processing		Internal resistor included in models from 600 W to 5 kW. Regenerative resistor externally mounted (option).
	Overtravel (OT) prevention function		DB stop, deceleration stop or coast to stop during P-OT, N-OT operation
	Encoder divider function		Optional division possible
	Electronic gearing (Numerator/Denominator)		Up to 4 electronic gear numerators by combining with inputs.
	Internal speed setting function		8 speeds may be set internally
	Protective functions		Overcurrent, overvoltage, undervoltage, overspeed, overload, encoder error, overheat ...
	Analogue monitor functions for supervision		Analogue monitor of motor speed, speed reference, torque reference, command following error, analogue input ... The monitoring signals to output and their scaling can be specified by parameters. Number of channels: 2 (Output voltage: ±10V DC)
	Panel operator	Display functions	6-digit 7-segment LED display shows the drive status, alarm codes, parameters ...
		Panel operator keys	Used to set/monitor parameters and drive condition (5 key switches).
	CHARGE lamp		Lits when the main circuit power supply is turned ON.
	Safety terminal	Functions	Safety torque OFF function to cut off the motor current and stop the motor. Output signal for failure monitoring function.
		Conformed standards	EN ISO13849-1:2008 (PL- d, Performance Level d), IEC61800-5 -2:2007 (function STO, Safe Torque OFF), EN61508:2001 (Safety Integrity Level 2, SIL2), EN954-1:1996 (CAT3).
	Encoder feedback		A/B line-driver encoder and SinCos to serial conversion available. Optional hall and temperature sensors via serial converter.
	Expansion connector		Serial bus for option board

Servo drive part names

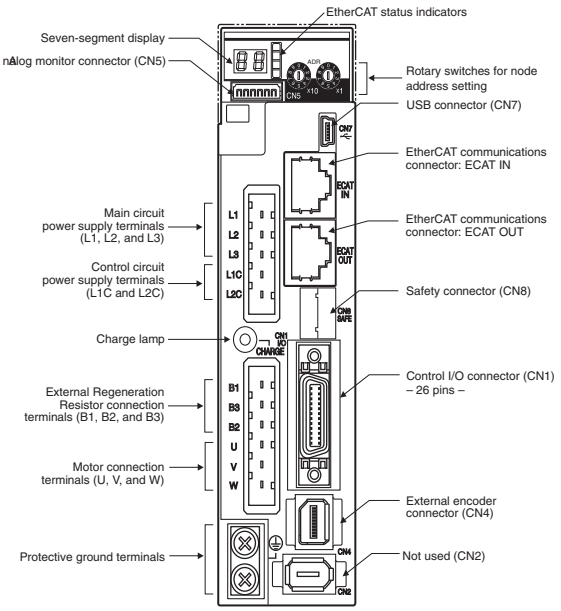

EtherCAT servo drives

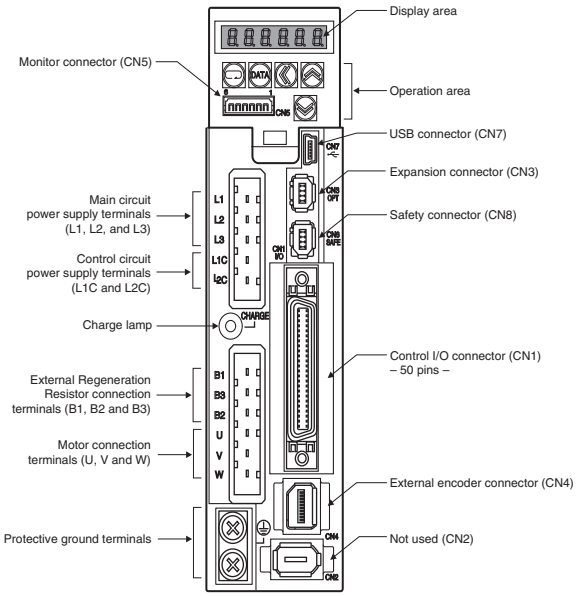

Analogue/pulse servo drives

Note: The above pictures show 230 V servo drives models only. The 400 V servo drives have 24 VDC power input terminals for control circuit instead of L1C and L2C terminals.

I/O specifications

Terminals specifications (for all servo drives)

Symbol	Name	Function
L1	Main power supply input terminal	AC power input terminals for the main circuit **Note:** for single-phase servo drives connect the power supply input to L1 and L3.
L2		
L3		
L1C	Control power supply input terminal	AC power input terminals for the control circuit (for 200 V single/three-phase servo drives only).
L2C		
24 V		DC power input terminals for the control circuit (for 400 V three-phase servo drives only).
0 V		
B1	External regeneration resistor connection terminals	Servo drives 200 V below 750 W: no internal resistor is connected. Leave B2 and B3 open. Connect an external regenerative resistor between B1 and B2. Servo drives from 600 W to 5 kW: short-circuit in B2 and B3 for internal regenerative resistor. If the internal regenerative resistor is insufficient, connect an external regenerative resistor between B1 and B2 and remove the wire between B2 and B3.
B2		
B3		
U	Servo motor connection terminals	Terminals for outputs to the servomotor.
V		
W		

I/O signals (CN1) – Input signals (for EtherCAT servo drives)

Pin No.	Signal name	Function	
6	I-COM	± pole of external DC power. The power must use 12 to 24 V (±5%)	
5	E-STOP	Emergency stop	The signal name shows the factory setting. The function can be changed by parameter setting.
7	P-OT	Forward run prohibited	
8	N-OT	Reverse run prohibited	
9	DEC	Origin proximity	
10	EXT3	External latch input 3	
11	EXT2	External latch input 2	
12	EXT1	External latch input 1	
13	SI-MON0	General purpose monitor input 0	
14	–	Terminals not used. Do not connect.	
15	–		
17	–		
18	–		
19	–		
20	–		
21	–		
22	–		
23	–		
24	–		
–	PCL	Forward force limit	The function of input signals allocated to pins 5 and 7 to 13 can be changed with these options by parameters settings.
	NCL	Reverse force limit	
	SI-MON1	General-purpose monitor input 1	
	SI-MON2	General-purpose monitor input 2	
Shell	FG	Shield ground. Connected to frame ground if the shield wire of the I/O signal cable is connected to the connector shell.	
16	GND	Signal ground. It is insulated with power supply (I-COM) for the control signal in the servo drive.	

I/O signals (CN1) – Output signals (for EtherCAT servo drives)

Pin No.	Signal name	Function	
1	BRK-OFF+	External brake release signal	
2	BRK-OFF		
25	S-RDY+	Servo ready: ON when there is no servo alarm and control/main circuit power supply is ON	
26	S-RDY–		
3	ALM+	Servo alarm: Turns OFF when an error is detected	
4	ALM–		
–	INP1	Position complete output 1	The function of output signals allocated to pins 1, 2, 25 and 26 can be changed with these options by parameters settings
	TGON	Motor speed detection	
	F_LIMIT	Force limit detection	
	ZSP	Zero speed	
	VCMP	Speed conformity output	
	WARN1	Warning 1	
	WARN2	Warning 2	
	PCMD	Position command status	
	INP2	Position complete output 2	
	VLIMIT	Speed limit detection	
	ALM-ATB	Error clear attribute	
	VCMD	Speed command status	
	R-OUT1	Remote output 1	
	R-OUT2	Remote output 1	

I/O signals (CN1) – Input signals (for analogue/pulse servo drives)

Pin No.	Control mode	Signal name	Function	
1	Position	+24 VCW	Reference pulse input for line driver and open collector according to parameter setting. Input mode: Sign + pulse string Reverse/forward pulse (CCW/CW pulse) Two-phase pulse (90° phase differential)	
3		+CW		
4		–CW		
2		+24 VCCW		
5		+CCW		
6		–CCW		
44		+CWLD	Reference pulse input for line driver only. Input mode: Reverse/forward pulse (CCW/CW pulse)	
45		–CWLD		
46		+CCWLD		
47		–CCWLD		
14	Speed	REF	Speed reference input: ±10 V/rated motor speed (input gain can be modified using a parameter).	
	Force	FREF1	Force reference input: ±10 V/rated motor torque (input gain can be modified using a parameter).	
		VLIM	Speed limit input: ±10 V/rated motor speed (input gain can be modified using a parameter).	
15	–	AGND1	Analogue signal ground	
16	Force	FREF2	Force reference input: ±10 V/rated motor torque (input gain can be modified using a parameter).	
	Position/Speed	PCL	Forward Force limit input: ±10 V/rated motor torque (input gain can be modified using a parameter).	
18		NCL	Reverse Force limit input: ±10 V/rated motor torque (input gain can be modified using a parameter).	
17	–	AGND1	Analogue signal ground	
7	Common	+24 VIN	Control power supply input for sequence signals: users must provide the +24 V power supply (12 to 24 V).	
29		RUN	Servo ON: this turn ON the servo.	
26	Position	DFSEL1	Vibration filter switching 1	Enables vibration filter according parameter setting.
27	Common	GSEL	Gain switching	Enables gain value according parameter setting.
28	Position/	GESEL1	Electronic gear switching 1	Switches the numerator fro electronic gear ratio.
	Speed	VSEL3	Internal speed selection 3	Input to select the desired speed setting during internally speed operation. The speed selection is combining this input with VSEL1 and VSEL2 inputs.
30	Position	ECRST	Error counter reset input.	Resets the position error counter.
	Speed	VSEL2	Internal speed selection 2	Input to select the desired speed setting during internally speed operation. The speed selection is combining this input with VSEL1 and VSEL3 inputs.
31	Common	RESET	Alarm reset input.	Release the alarm status. The error counter is reset when the alarm is reset.
32	Position/ Speed/Force	TVSEL	Control mode switching	Position <--> speed Position <--> force Force <--> speed } Enables control mode switching
33	Position	IPG	Pulse prohibition input. Digital input to inhibit the position reference pulse.	
	Speed	VSEL1	Internal speed selection 1	Input to select the desired speed setting during internally speed operation. The speed selection is combining this input with VSEL2 and VSEL3 inputs.
8	Common	NOT	Reverse run prohibited	Overtravel prohibited: stops servomotor when movable part travels beyond the allowable range of motion.
9		POT	Forward run prohibited	
50		FG	Frame ground	
–	–	FLSEL	Force limit switch	The function of input signals allocated to pins 8,9 and 26 to 33 can be changed with these options by parameters settings
		DFSEL2	Vibration filter switching 2	
		GESEL2	Electronic gear switching 2	
		VZERO	Zero speed	
		VSIGN	Speed command signal	
		FSIGN	Force command signal	
		E-STOP	Emergency stop	
		MSEL	Mass ratio switching	
		ZSP	Zero speed	
20	–	Terminals not used. Do not connect.		
40	–			
41	–			

I/O signals (CN1) – Output signals (for analogue/pulse servo drives)

Pin No.	Control mode	Signal name	Function	
21	Position	+A	Encoder phase A+	Encoder signals (or external scale signals during full closing control) are output according Encoder Dividing Numerator parameter. This is the line-driver output (equivalent to R422). The maximum output frequency is 4 Mbps. Phase Z is output for encoder signals (or external scale signals during full closing control). This is the line-driver output (equivalent to R422).
22		–A	Encoder phase A–	
48		+B	Encoder phase B+	
49		–B	Encoder phase B–	
23		+Z	Encoder phase Z+	
24		–Z	Encoder phase Z–	
19		–Z	Encoder phase-Z output	Phase Z is output for encoder signals. Open-collector output.
25		ZCOM	Encoder phase-Z common	
11	Common	BKIR	Brake release signal output	Timing signal for operating the electromagnetic brake on a motor.
10		BKIRCOM		
35		READY	Servo ready: ON if there is not servo alarm when the control/main circuit power supply is turned ON.	
34		READYCOM		
37		/ALM	Servo alarm: turns OFF when an error is detected.	
36		ALMCOM		
39	Speed/force	TGON	Motor rotation speed detection. This output turns ON when the motor rotation speed reaches the speed set in a parameter.	
38		TGONCOM		
39	Position	INP1	Positioning complete output 1: turns ON when position error is equal to setting parameter.	
38		INP1COM		
40	Force limiting output	FLIM	This output turn ON while the force is limited.	
41		FLIMCOM		
12	Zero speed detection signal	ZSP	This output turn on when the motor movements speed is equal to Zero Speed Detection (Pn435) or less	
41		ZSPCOM		
–	–	INP2	Position complete output 2	The function of output signals allocated to pins 11,10, 34 to 40 can be changed with these options by parameters settings.
		P-CMD	Position command status	
		WARN1	Warning 1	
		WARN2	Warning 2	
		ALM-ATB	Alarm output	
		V-CMD	Speed command status	
		V-LIMIT	Speed limit detection	
		V-CMP	Speed conformity output	

External encoder connector (CN4) – (for all servo drives)

Pin No.	Signal name	Function
1	E5V	External scale power supply output. Use at 5.2V ±5% and at or below 250 mA.
2	E0V	This is connected to the control circuit ground connected to connector CN1.
3	PS	Encoder signal (serial transmission signal)
4	/PS	
5	EXA	Encoder line driver input (A-B-Z signals)
6	/EXA	
7	EXB	
8	/EXB	
9	EXZ	
10	/EXZ	
Shell	FG	Shield ground

Monitor connector (CN5) – (for all servo drives)

Pin No.	Signal name	Function
1	AM1	Analogue monitor output 1. Outputs the analogue signal for the monitor. Use the parameters setting to select the output to monitor. Default setting: Motor rotation speed 1 V/(500mm/s).
2	AM2	Analogue monitor output 2. Outputs the analogue signal for the monitor. Use the parameters setting to select the output to monitor. Default setting: Motor rotation speed 1 V/(33% of nominal force).
3	GND	Ground for analogue monitors 1,2.
4	-	Terminals not used. Do not connect.
5	-	
6	-	

Safety connector (CN8) – (for all servo drives)

Pin No.	Signal name	Function
1	–	Not used. Do not connect.
2	–	
3	SF1–	Safety input 1 and 2. This input turns OFF the power transistor drive signals in the servo drive to cut off the current output to the motor.
4	SF1+	
5	SF2–	
6	SF2+	
7	EDM–	A monitor signal is output to detect a safety function failure.
8	EDM+	
Shell	FG	Frame ground.

Dimensions

Servo drives

R88D-KT02H-L, R88D-KN02H-ECT-L (230 V, 200 W)

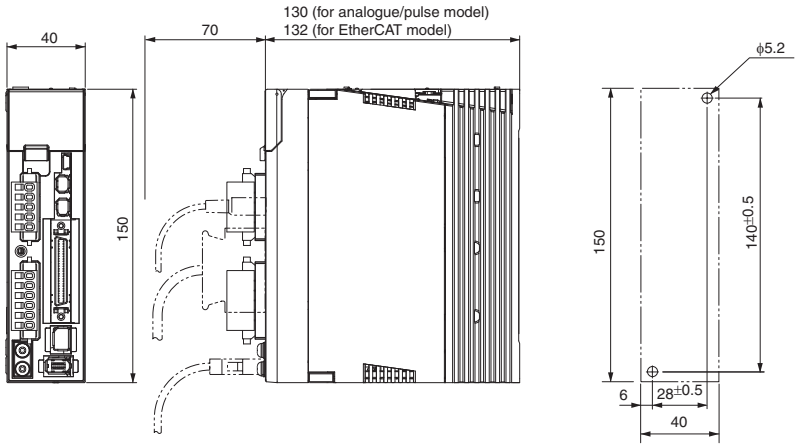

R88D-KT04H-L, R88D-KN04H-ECT-L (230 V, 400 W)

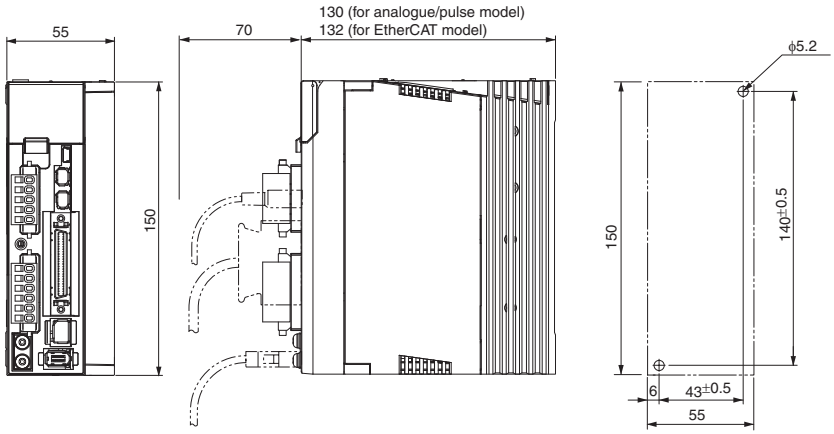

R88D-KT08H-L, R88D-KN08H-ECT-L (230 V, 800 W)

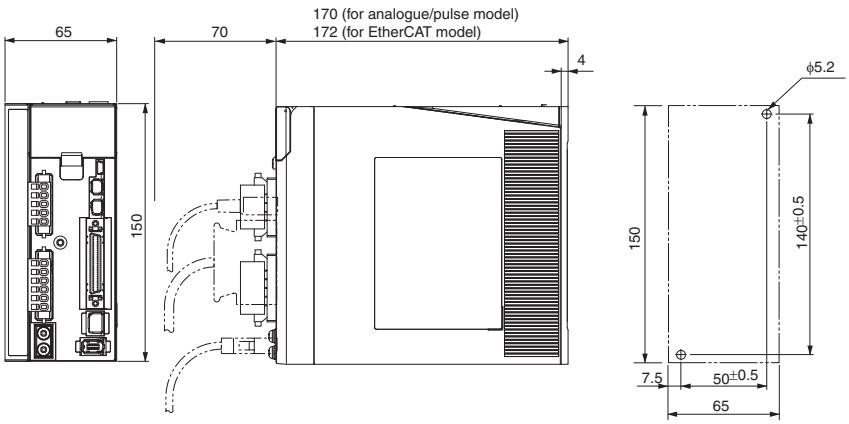

R88D-KT10/15H-L, R88D-KN10/15H-ECT-L (230 V, 1 to 1.5 kW)

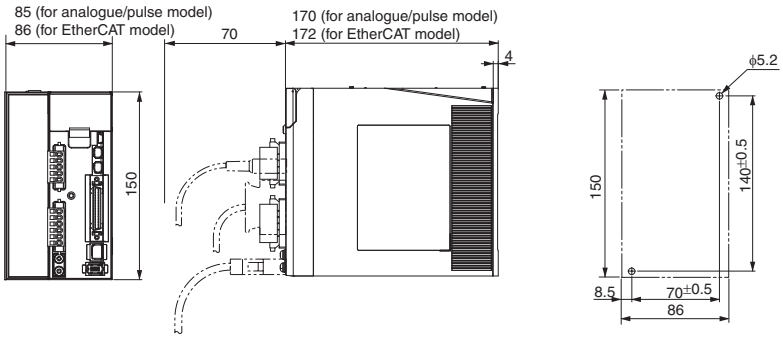

R88D-KT06/10/15F-L, R88D-KN06/10/15F-ECT-L (400 V, 600 W to 1.5 kW)

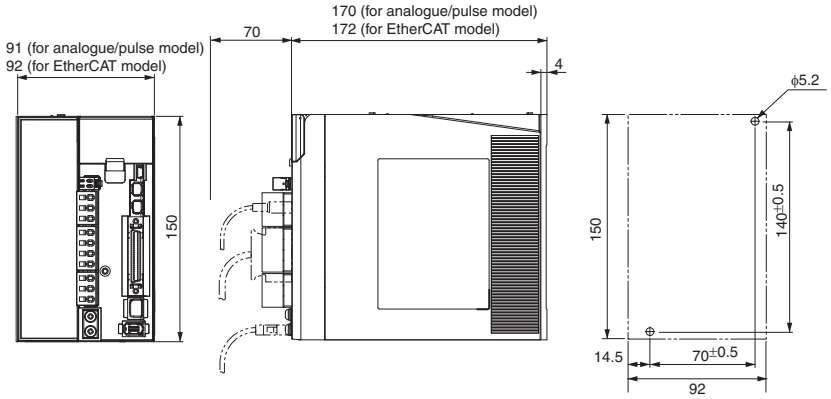

R88D-KT20F-L, R88D-KN20F-ECT-L (400 V, 2 kW)

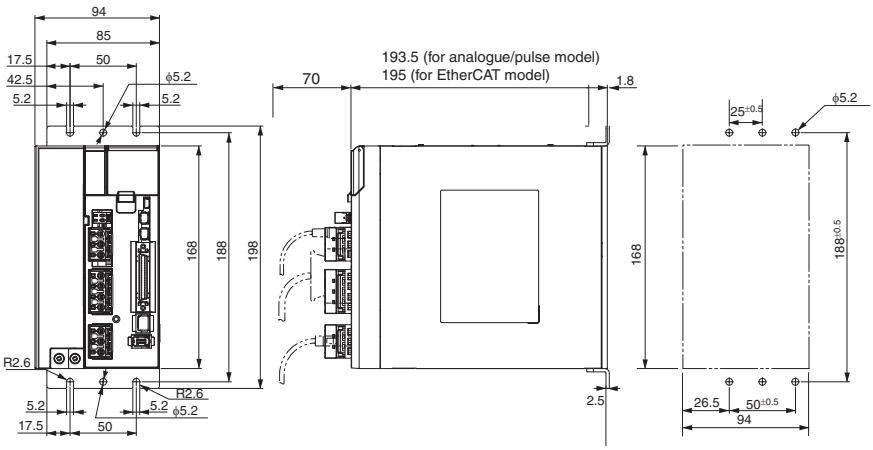

R88D-KT30F-L, R88D-KN30F-ECT-L (400 V, 3 kW)

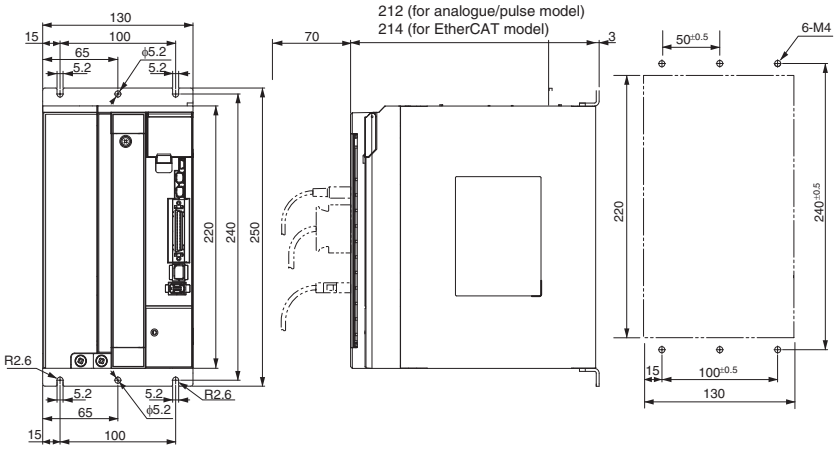

Filters

Filter model	External dimensions			Mount dimensions	
	H	W	D	M1	M2
R88A-FIK102-RE	190	42	44	180	20
R88A-FIK104-RE	190	57	30	180	30
R88A-FIK107-RE	190	64	35	180	40
R88A-FIK114-RE	190	86	35	180	60
R88A-FIK304-RE	196	92	40	186	70
R88A-FIK306-RE	238	94	40	228	70
R88A-FIK312-RE	291	130	40	278	100

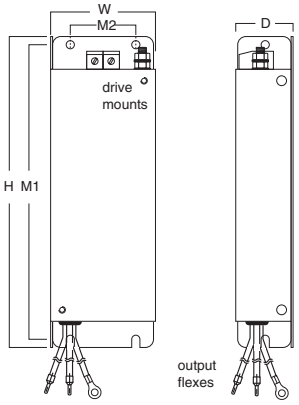

Installation

Single-phase, 230 VAC (for EtherCAT servo drives)

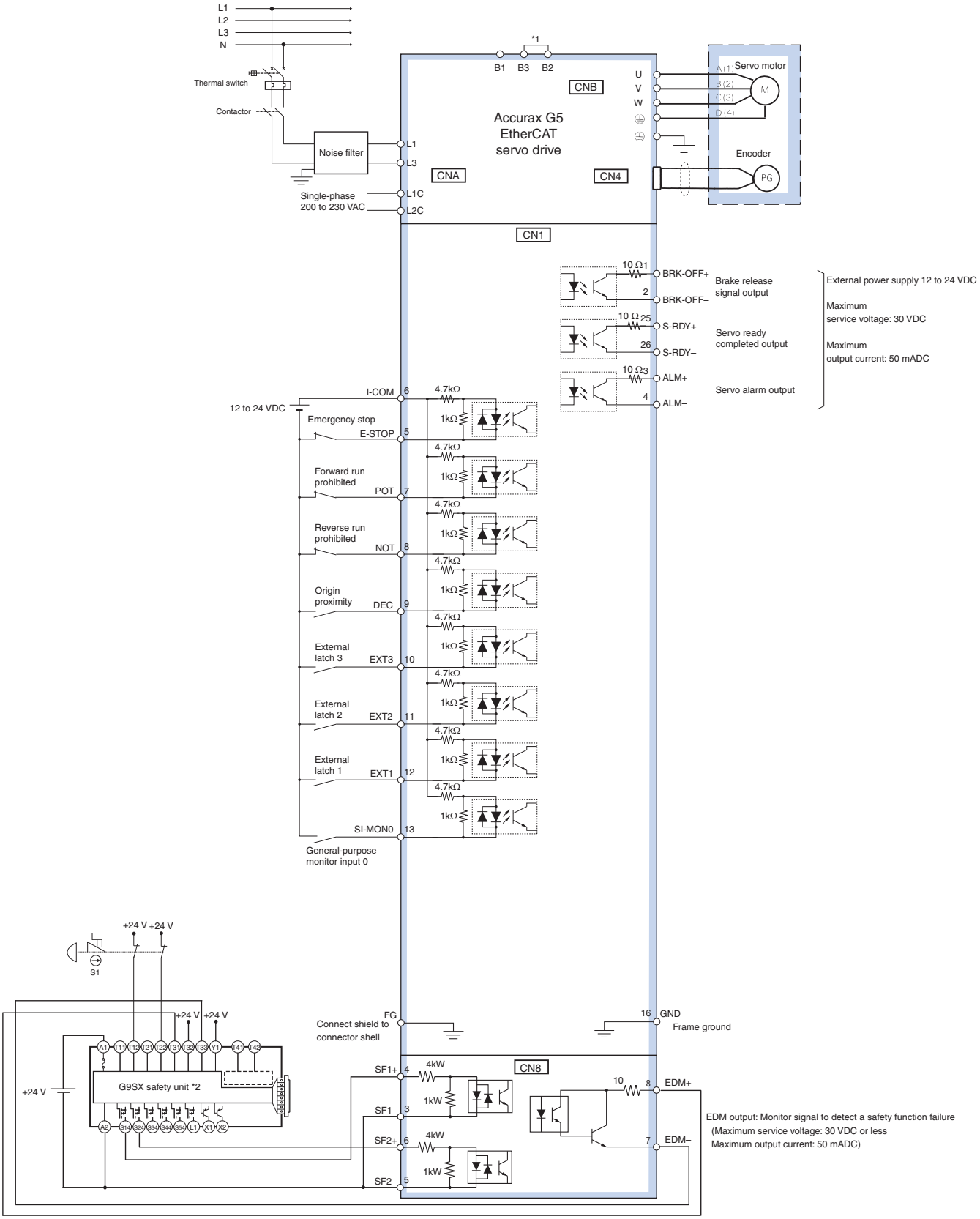

*1 For servo drives from 750 W, B2 and B3 are short-circuited. If the internal regenerative resistor is insufficient, remove the wire between B2 and B3 and connect an external regenerative resistor between B1 and B2.
*2 Wiring diagram example using the G9SX safety unit. If a safety unit is not used, keep the factory safety bypass connector installed in the CN8.

Note: The input function of pins 5 and 7 to 13, and output function of pins 1, 2, 25 and 26, can be changed via parameter settings.

Three-phase, 400 VAC (for EtherCAT servo drives)

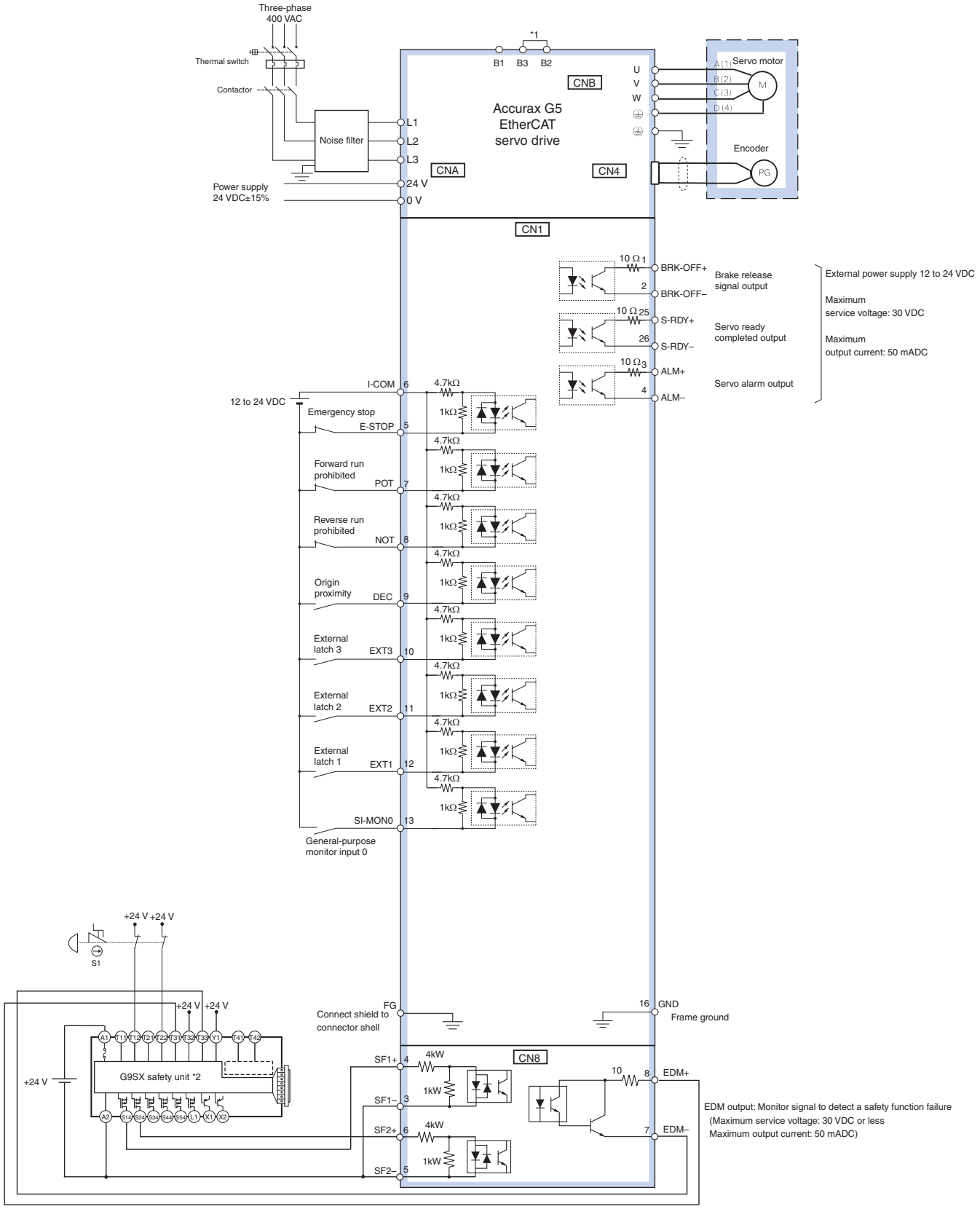

*1 Normally B2 and B3 are short-circuited. If the internal regenerative resistor is insufficient, remove the wire between B2 and B3 and connect an external regenerative resistor between B1 and B2.

*2 Wiring diagram example using the G9SX safety unit. If a safety unit is not used, keep the factory safety bypass connector installed in the CN8.

Note: The input function of pins 5 and 7 to 13, and output function of pins 1, 2, 25 and 26, can be changed via parameter settings.

Single-phase, 230 VAC (for analogue/pulse servo drives)

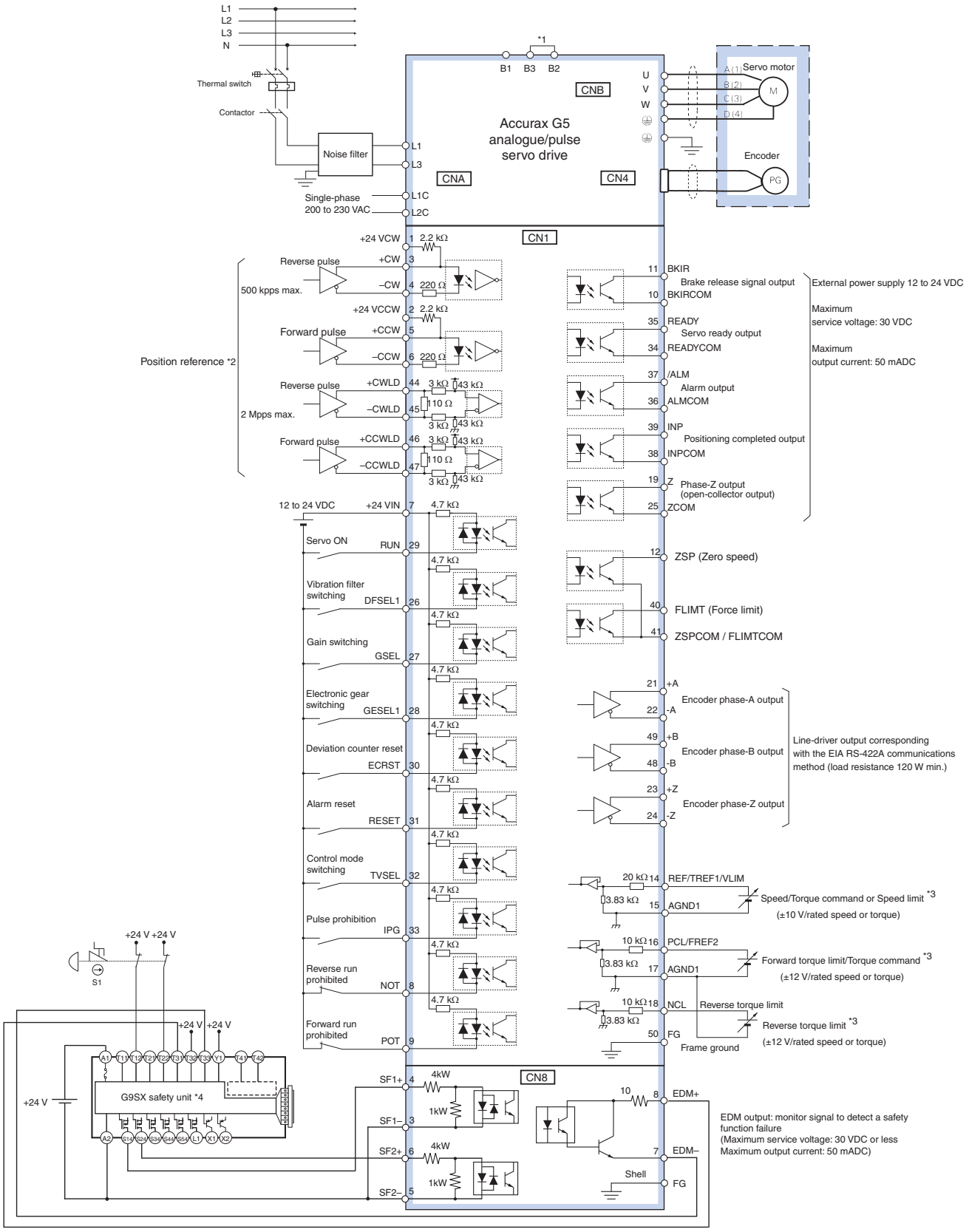

*1 For servo drives from 750 W, B2 and B3 are short-circuited. If the internal regenerative resistor is insufficient, remove the wire between B2 and B3 and connect an external regenerative resistor between B1 and B2.
*2 Only available in position control mode.
*3 The input function depends on control mode used (Position, speed or torque control).
*4 Wiring diagram example using the G9SX safety unit. If a safety unit is not used, keep the factory safety bypass connector installed in the CN8.

Note: The input function of pins 8,9 and 26 to 33, and output function of pins 10, 11, 34, 35, 38 and 39, can be changed via parameter settings.

Three-phase, 400 VAC (for analogue/pulse servo drives)

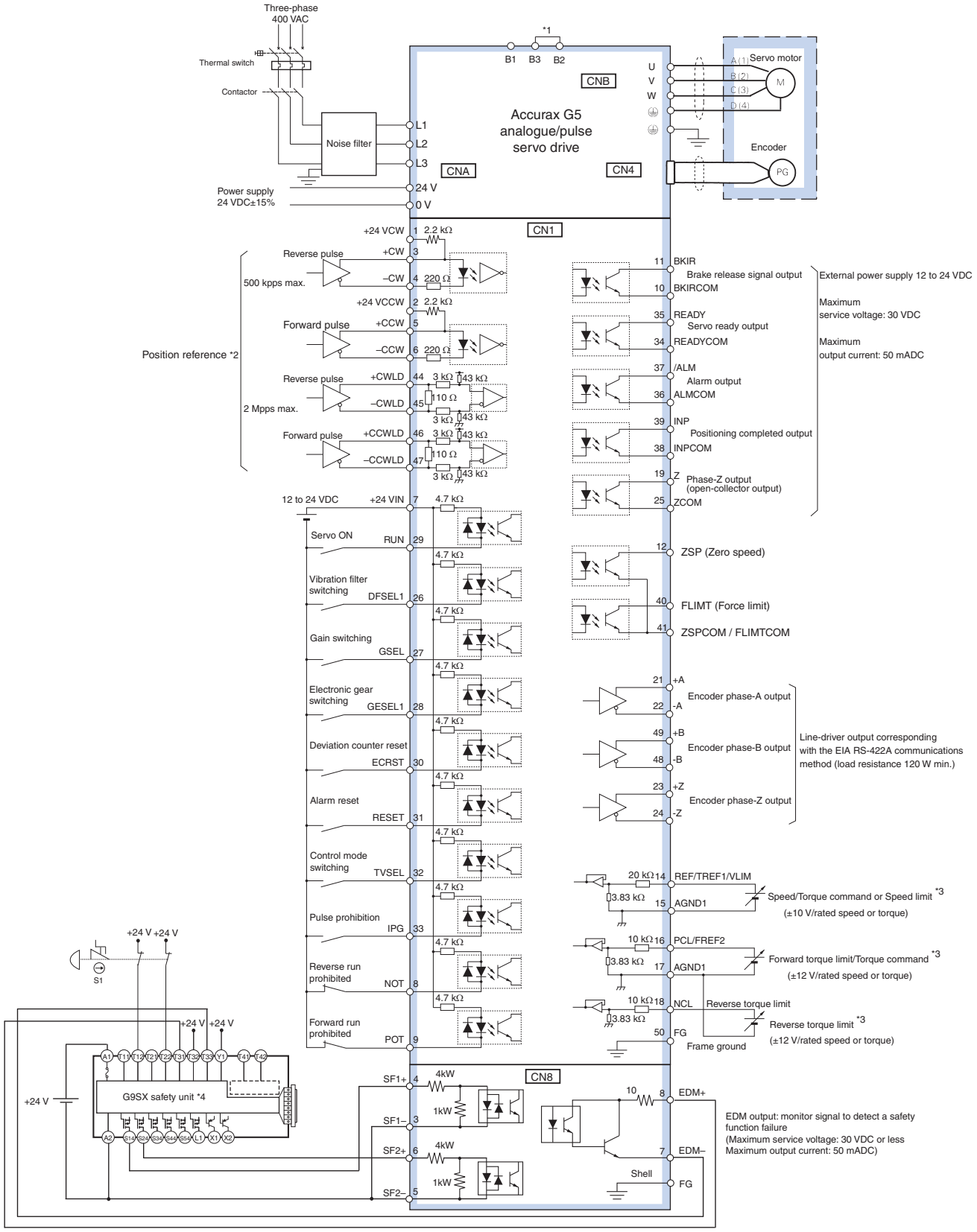

*1 Normally B2 and B3 are short-circuited. If the internal regenerative resistor is insufficient, remove the wire between B2 and B3 and connect an external regenerative resistor between B1 and B2.
*2 Only available in position control mode.
*3 The input function depends on control mode used (Position, speed or torque control).
*4 Wiring diagram example using the G9SX safety unit. If a safety unit is not used, keep the factory safety bypass connector installed in the CN8.

Note: The input function of pins 8,9 and 26 to 33, and output function of pins 10, 11, 34, 35, 38 and 39, can be changed via parameter settings.

Ordering information

Accurax G5 series EtherCAT reference configuration

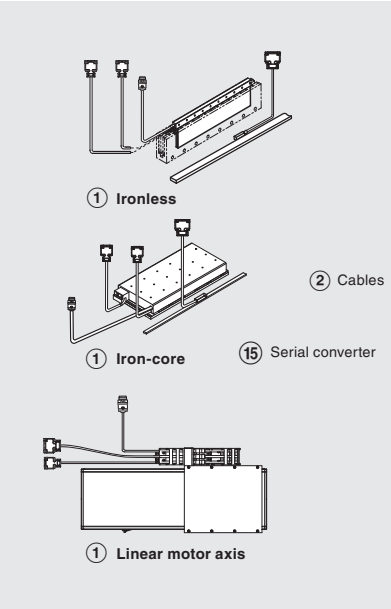

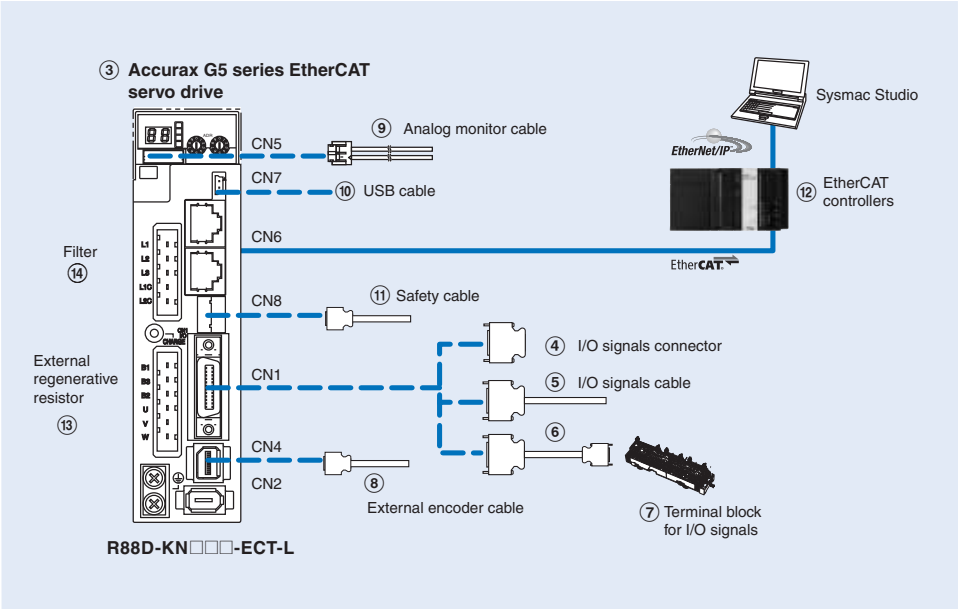

Note: The symbols ①②③④⑤ ... show the recommended sequence to select the components in Accurax G5 servo system

Servo motors, power and encoder cables

Note: ①②⑮ Refer to the Accurax linear motor chapter for linear motor, cables or connectors selection

Servo drives

Symbol	Specifications	Servo drive models	① Compatible Accurax G5 Linear motors		
			Iron-core motors	Ironless motors	Linear motor axis
③	1 phase 230 VAC	R88D-KN02H-ECT-L	R88L-EC-FW-0303-□	R88L-EC-GW-0303-□	R88L-EA-AF-0303-□
				R88L-EC-GW-0503-□	
		R88D-KN04H-ECT-L	R88L-EC-FW-0306-□	R88L-EC-GW-0506-□	R88L-EA-AF-0306-□
				R88L-EC-GW-0703-□	
		R88D-KN08H-ECT-L	R88L-EC-FW-0606-□	R88L-EC-GW-0306-□	R88L-EA-AF-0606-□
				R88L-EC-GW-0509-□	
				R88L-EC-GW-0706-□	
		R88D-KN10H-ECT-L	R88L-EC-FW-0609-□	R88L-EC-GW-0309-□	R88L-EA-AF-0609-□
				R88L-EC-FW-0709-□	
		R88D-KN15H-ECT-L	R88L-EC-FW-0612-□	–	R88L-EA-AF-0612-□
			R88L-EC-FW-1112-□		R88L-EA-AF-1112-□
			R88L-EC-FW-1115-□		R88L-EA-AF-1115-□
	3 phase 400 VAC	R88D-KN06F-ECT-L	R88L-EC-FW-0303-□	–	-
		R88D-KN10F-ECT-L	R88L-EC-FW-0306-□	–	R88L-EA-AF-0303-□
					R88L-EA-AF-0306-□
		R88D-KN15F-ECT-L	R88L-EC-FW-0606-□	–	R88L-EA-AF-0606-□
		R88D-KN20F-ECT-L	R88L-EC-FW-0609-□	–	R88L-EA-AF-0609-□
		R88D-KN30F-ECT-L	R88L-EC-FW-0612-□	–	R88L-EA-AF-0612-□
			R88L-EC-FW-1112-□		R88L-EA-AF-1112-□
			R88L-EC-FW-1115-□		R88L-EA-AF-1115-□

Signals cables for I/O general purpose (CN1)

Symbol	Description	Connect to		Model
④	I/O connector kit (26 pins)	For I/O general purpose	–	R88A-CNW01C
⑤	I/O signals cable	For I/O general purpose	1 m	R88A-CPKB001S-E
			2 m	R88A-CPKB002S-E
⑥	Terminal block cable	For I/O general purpose	1 m	XW2Z-100J-B34
			2 m	XW2Z-200J-B34
⑦	Terminal block (M3 screw and for pin terminals)		–	XW2B-20G4
	Terminal block (M3.5 screw and for fork/round terminals)		–	XW2B-20G5
	Terminal block (M3 screw and for fork/round terminals)		–	XW2D-20G6

External encoder cable (CN4)

Symbol	Name		Model
⑧	External encoder cable	5 m	R88A-CRKM005SR-E
		10 m	R88A-CRKM010SR-E
		20 m	R88A-CRKM020SR-E

Analogue monitor (CN5)

Symbol	Name		Model
⑨	Analogue monitor cable	1 m	R88A-CMK001S

USB personal computer cable (CN7)

Symbol	Name		Model
⑩	USB mini-connector cable	2 m	AX-CUSBM002-E

Cable for safety (CN8)

Symbol	Name		Model
⑪	Safety cable	3 m	R88A-CSK003S-E

EtherCAT controllers

Symbol	Name		Model
⑫	NJ series	CPU unit	NJ501-1500 (64 axes)
			NJ501-1400 (32 axes)
			NJ501-1300 (16 axes)
			NJ301-1200 (8 axes)
			NJ301-1100 (4 axes)
		Power supply unit	NJ-PA3001 (220 VAC)
			NJ-PD3001 (24 VDC)
	Trajexia stand-alone motion controller	Motion control unit	TJ2-MC64 (64 axes)
		EtherCAT master unit	TJ2-ECT64 (64 axes)
			TJ2-ECT16 (16 axes)
			TJ2-ECT04 (4 axes)
	Position Controller Unit for CJ1 PLC series		CJ1W-NCF81 (16 axes)
			CJ1W-NC88□ (8 axes)
			CJ1W-NC48□ (4 axes)
			CJ1W-NC281(2 axes)

External regenerative resistor

Symbol	Regenerative resistor unit model	Specifications
⑬	R88A-RR08050S	50 Ω, 80 W
	R88A-RR080100S	100 Ω, 80 W
	R88A-RR22047S	47 Ω, 220 W
	R88A-RR50020S	20 Ω, 500 W

Filters

Symbol	Applicable servodrive	Filter model	Manufacturer	Rated current	Leakage current	Rated voltage
⑭	R88D-KN02H-ECT-L	R88A-FIK102-RE	Rasmi Electronics Ltd	2.4 A	3.5 mA	250 VAC single-phase
	R88D-KN04H-ECT-L	R88A-FIK104-RE		4.1 A	3.5 mA	
	R88D-KN08H-ECT-L	R88A-FIK107-RE		6.6 A	3.5 mA	
	R88D-KN10H-ECT-L, R88D-KN15H-ECT-L	R88A-FIK114-RE		14.2 A	3.5 mA	
	R88D-KN06F-ECT-L, R88D-KN10F-ECT-L, R88D-KN15F-ECT-L	R88A-FIK304-RE		4 A	0.3 mA / 32 mA[1]	400 VAC three-phase
	R88D-KN20F-ECT-L	R88A-FIK306-RE		6 A	0.3 mA / 32 mA[1]	
	R88D-KN30F-ECT-L	R88A-FIK312-RE		12.1 A	0.3 mA / 32 mA[1]	

1. Momentary peak leakage current for the filter at switch-on/off.

Connectors

Specifications	Model
External encoder connector (for CN4)	R88A-CNK41L
Safety I/O signal connector (for CN8)	R88A-CNK81S

Computer software

Specifications	Model
Sysmac Studio version 1.0 or higher	SYSMAC-SE2□□□
CX-Drive version 2.60 or higher	CX-DRIVE 2.60

Note: If CX-One is installed on the same computer as Sysmac Studio, it must be CX-One v4.2 or higher

Ordering information

Accurax G5 series analogue/pulse reference configuration

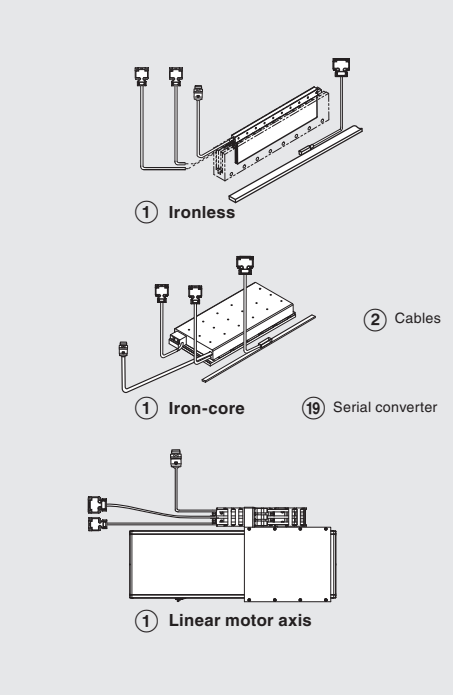

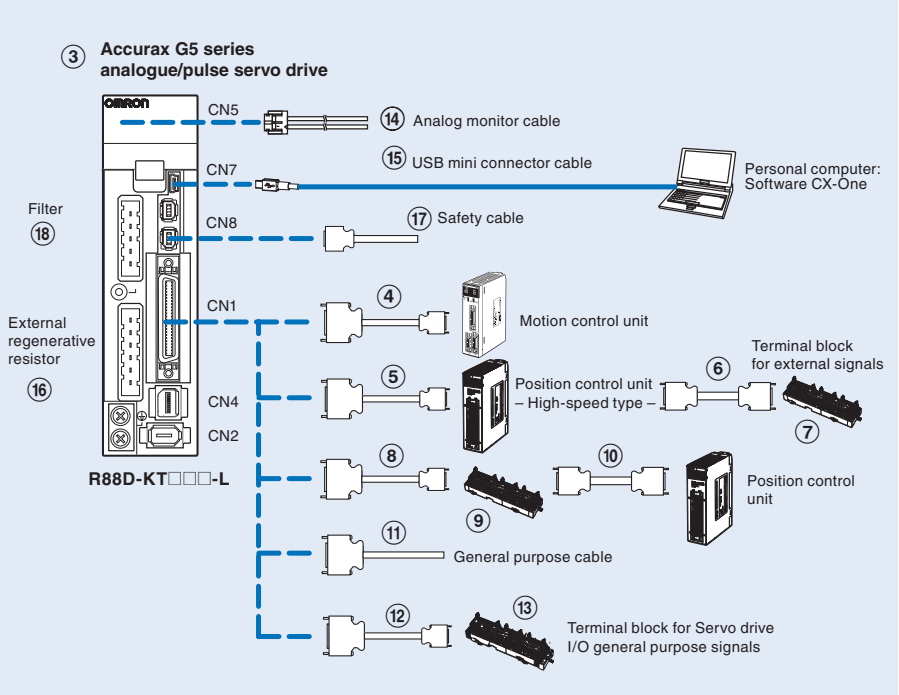

Note: The symbols ①②③④⑤ ... show the recommended sequence to select the components in Accurax G5 servo system

Servo motors, power and encoder cables

Note: ①②⑲ Refer to the Accurax G5 linear motor chapter for linear motor, cables or connectors selection

Servo drives

Symbol	Specifications	Servo drive models	① Compatible Accurax G5 Linear motors		
			Iron-core motors	Ironless motors	Linear motor axis
③	1 phase 230 VAC	R88D-KT02H-L	R88L-EC-FW-0303-□	R88L-EC-GW-0303-□	R88L-EA-AF-0303-□
				R88L-EC-GW-0503-□	
		R88D-KT04H-L	R88L-EC-FW-0306-□	R88L-EC-GW-0506-□	R88L-EA-AF-0306-□
				R88L-EC-GW-0703-□	
		R88D-KT08H-L	R88L-EC-FW-0606-□	R88L-EC-GW-0306-□	R88L-EA-AF-0606-□
				R88L-EC-GW-0509-□	
				R88L-EC-GW-0706-□	
		R88D-KT10H-L	R88L-EC-FW-0609-□	R88L-EC-GW-0309-□	R88L-EA-AF-0609-□
				R88L-EC-FW-0709-□	
		R88D-KT15H-L	R88L-EC-FW-0612-□	–	R88L-EA-AF-0612-□
			R88L-EC-FW-1112-□		R88L-EA-AF-1112-□
			R88L-EC-FW-1115-□		R88L-EA-AF-1115-□
	3 phase 400 VAC	R88D-KT06F-L	R88L-EC-FW-0303-□	–	–
		R88D-KT10F-L	R88L-EC-FW-0306-□	–	R88L-EA-AF-0303-□
					R88L-EA-AF-0306-□
		R88D-KT15F-L	R88L-EC-FW-0606-□	–	R88L-EA-AF-0606-□
		R88D-KT20F-L	R88L-EC-FW-0609-□	–	R88L-EA-AF-0609-□
		R88D-KT30F-L	R88L-EC-FW-0612-□	–	R88L-EA-AF-0612-□
			R88L-EC-FW-1112-□		R88L-EA-AF-1112-□
			R88L-EC-FW-1115-□		R88L-EA-AF-1115-□

Control cables (CN1)

Symbol	Description	Connect to		Model
④	Control cable (1 axis)	Motion control units CS1W-MC221 CS1W-MC421	1 m	R88A-CPG001M1
			2 m	R88A-CPG002M1
			3 m	R88A-CPG003M1
			5 m	R88A-CPG005M1
	Control cable (2 axes)	Motion control units CS1W-MC221-V1 CS1W-MC421-V1	1 m	R88A-CPG001M2
			2 m	R88A-CPG002M2
			3 m	R88A-CPG003M2
			5 m	R88A-CPG005M2
⑤	Control cable (line-driver output for 1 axis)	Position control units (high-speed type) CJ1W-NC234 CJ1W-NC434	1 m	XW2Z-100J-G9
			5 m	XW2Z-500J-G9
			10 m	XW2Z-10MJ-G9
	Control cable (open-collector output for 1 axis)	Position control units (high-speed type) CJ1W-NC214 CJ1W-NC414	1 m	XW2Z-100J-G13
			3 m	XW2Z-300J-G13
	Control cable (line-driver output for 2 axes)	Position control units (high-speed type) CJ1W-NC234 CJ1W-NC434	1 m	XW2Z-100J-G13
			5 m	XW2Z-500J-G1
			10 m	XW2Z-10MJ-G1
	Control cable (open-collector output for 2 axes)	Position control units (high-speed type) CJ1W-NC214 CJ1W-NC414	1 m	XW2Z-100J-G5
			3 m	XW2Z-300J-G5
⑥	Terminal block cable for external signals (for input common, forward/reverse run prohibited inputs, emergency stop input, origin proximity input and interrupt input)	Position control units (high-speed type) CJ1W-NC234 CJ1W-NC434 CJ1W-NC214 CJ1W-NC414	0.5 m	XW2Z-C50X
			1 m	XW2Z-100X
			2 m	XW2Z-200X
			3 m	XW2Z-300X
			5 m	XW2Z-500X
			10 m	XW2Z-010X
⑦	Terminal block for external signals (M3 screw, pin terminals)		–	XW2B-20G4
	Terminal block for ext. signals (M3.5 screw, fork/round terminals)		–	XW2B-20G5
	Terminal block for ext. signals (M3 screw, fork/round terminals)		–	XW2D-20G6
⑧	Cable from servo relay unit to servo drive	CS1W-NC1□3, CJ1W-NC1□3, C200HW-NC113, CS1W-NC2□3/4□3, CJ1W-NC2□3/4□3, C200HW-NC213/413, CQM1H-PLB21 or CQM1-CPU43	1m	XW2Z-100J-B25
			2m	XW2Z-200J-B25
		CJ1-CPU21/22/23	1m	XW2Z-100J-B31
			2m	XW2Z-200J-B31
⑨	Servo relay unit	Position control units CS1W-NC1□3, CJ1W-NC1□3 or C200HW-NC113	–	XW2B-20J6-1B (1 axis)
		Position control units CS1W-NC2□3/4**3**3, CJ1W-NC2□3/4**3**3 or C200HW-NC213/413	–	XW2B-40J6-2B (2 axes)
		CQM1-PLB21 or CQM1-CPU43-V1	–	XW2B-20J6-3B (1 axis)
		CJ1M-CPU21/22/23	–	XW2B-20J6-8A (1 axis) XW2B-40J6-9A (2 axes)
⑩	Position control unit connecting cable	CQM1H-PLB21	0.5 m	XW2Z-050J-A3
			1 m	XW2Z-100J-A3
		CS1W-NC113 or C200HW-NC113	0.5 m	XW2Z-050J-A6
			1 m	XW2Z-100J-A6
		CS1W-NC213/413 or C200HW-NC213/413	0.5 m	XW2Z-050J-A7
			1 m	XW2Z-100J-A7
		CS1W-NC133	0.5 m	XW2Z-050J-A10
			1 m	XW2Z-100J-A10
		CS1W-NC233/433	0.5 m	XW2Z-050J-A11
			1 m	XW2Z-100J-A11
		CJ1W-NC113	0.5 m	XW2Z-050J-A14
			1 m	XW2Z-100J-A14
		CJ1W-NC213/413	0.5 m	XW2Z-050J-A15
			1 m	XW2Z-100J-A15
		CJ1W-NC133	0.5 m	XW2Z-050J-A18
			1 m	XW2Z-100J-A18
		CJ1W-NC233/433	0.5 m	XW2Z-050J-A19
			1 m	XW2Z-100J-A19
		CJ1M-CPU21/22/23	0.5 m	XW2Z-050J-A33
			1 m	XW2Z-100J-A33
⑪	General purpose cable	For general purpose controllers	1 m	R88A-CPG001S
			2 m	R88A-CPG002S
⑫	Terminal block cable	For general purpose controllers	1 m	XW2Z-100J-B24
			2 m	XW2Z-200J-B24
⑬	Terminal block (M3 screw and for pin terminals)		–	XW2B-50G4
	Terminal block (M3.5 screw and for fork/round terminals)		–	XW2B-50G5
	Terminal block (M3 screw and for fork/round terminals)		–	XW2D-50G6

Analogue monitor (CN5)

Symbol	Name		Model
⑭	Analogue monitor cable	1 m	R88A-CMK001S

USB personal computer cable (CN7)

Symbol	Name		Model
⑮	USB mini-connector cable	2 m	AX-CUSBM002-E

External regenerative resistor

Symbol	Regenerative resistor unit model	Specifications
⑯	R88A-RR08050S	50 Ω, 20 W
	R88A-RR080100S	100 Ω, 20 W
	R88A-RR22047S	47 Ω, 70 W
	R88A-RR50020S	20 Ω, 180 W

Cable for Safety Functions (CN8)

Symbol	Description	Model
⑰	Safety connector with 3 m cable (with loose wires at one end)	R88A-CSK003S-E

Filters

Symbol	Applicable servodrive	Filter model	Manufacturer	Rated current	Leakage current	Rated voltage
⑱	R88D-KT02H-L	R88A-FIK102-RE	Rasmi Electronics Ltd	2.4 A	3.5 mA	250 VAC single-phase
	R88D-KT04H-L	R88A-FIK104-RE		4.1 A	3.5 mA	
	R88D-KT08H-L	R88A-FIK107-RE		6.6 A	3.5 mA	
	R88D-KT10H-L, R88D-KT15H-L	R88A-FIK114-RE		14.2 A	3.5 mA	
	R88D-KT06F-L, R88D-KT10F-L, R88D-KT15F-L	R88A-FIK304-RE		4 A	0.3 mA/32 mA[1]	400 VAC three-phase
	R88D-KT20F-L	R88A-FIK306-RE		6 A	0.3 mA/32 mA[1]	
	R88D-KT30F-L	R88A-FIK312-RE		12.1 A	0.3 mA/32 mA[1]	

1. Momentary peak leakage current for the filter at switch-on/off.

Connectors

Specifications	Model
I/O connector kit -50 pins-(for CN1)	R88A-CNU11C
External encoder connector (for CN4)	R88A-CNK41L
Safety I/O signal connector (for CN8)	R88A-CNK81S

Computer software

Specifications	Model
CX-Drive version 2.50 or higher	CX-DRIVE 2.50

ALL DIMENSIONS SHOWN ARE IN MILLIMETERS.
To convert millimeters into inches, multiply by 0.03937. To convert grams into ounces, multiply by 0.03527.

Cat. No. I165E-EN-02A

In the interest of product improvement, specifications are subject to change without notice.

Automatización Eléctrica
Especialistas en Automatización

Below is a list of articles with direct links to our shop Electric Automation Network where you can see:

- Quote per purchase volume in real time.
- Online documentation and datasheets of all products.
- Estimated delivery time enquiry in real time.
- Logistics systems for the shipment of materials almost anywhere in the world.
- Purchasing management, order record and tracking of shipments.

To access the product, click on the green button.

Product	Code	Reference	Product link
Servos, Accurax G5 external encoder connector (for CN4)	294101	R88A-CNK41L	Buy on EAN
G5 series servo safety I/O connector [for CN8]	294100	R88A-CNK81S	Buy on EAN
Servos, Drive Accurax G5 ETHERCAT, 100W, 200V	352679	R88D-KN01H-ECT	Buy on EAN
Servos, Drive Accurax G5 EtherCAT linear motors, 1kW, 200V	356050	R88D-KN10H-ECT-L	Buy on EAN
Servos, Drive Accurax G5 EtherCAT linear motors, 750W, 200V	356049	R88D-KN08H-ECT-L	Buy on EAN
Servos, Drive Accurax G5 EtherCAT linear motors, 400W, 200V	356048	R88D-KN04H-ECT-L	Buy on EAN
Servos, Drive Accurax G5 EtherCAT linear motors, 200W, 200V	356047	R88D-KN02H-ECT-L	Buy on EAN
Servos, Drive Accurax G5 EtherCAT linear motors, 100W, 200V	356046	R88D-KN01H-ECT-L	Buy on EAN
Servos, Drive Accurax G5 EtherCAT linear motors, 600W, 400V	356057	R88D-KN06F-ECT-L	Buy on EAN
Machine Controllers, NJ501 Axis Machine Controller 16	355309	NJ501-1300	Buy on EAN
Servos, Drive Accurax G5 EtherCAT linear motors, 3KW, 400V	356061	R88D-KN30F-ECT-L	Buy on EAN
Servos, Drive Accurax G5 EtherCAT linear motors, 3KW, 400V	356060	R88D-KN20F-ECT-L	Buy on EAN
Machine Controllers, NJ301 4 Axis Machine Controller	363842	NJ301-1100	Buy on EAN
Servos, Drive Accurax G5 EtherCAT linear motors, 1.5KW, 200V	356051	R88D-KN15H-ECT-L	Buy on EAN

Machine Controllers, NJ301 Machine Controller 8 Axles	363924	NJ301-1200	Buy on EAN
Drives, Servo Cable Accurax PC G5 / MX2 inverter (mini USB)	322128	AX-CUSBM002-E	Buy on EAN
Servos, Accurax G5, Analog Monitor Cable, 1m [to CN5]	382802	R88A-CMK001S	Buy on EAN
	324250	R88L-EC-FW-1112-APLC	Buy on EAN
Servos, Series G / G5 RFI filter; 14.2A, 250VAC, for models 1.0 and 1.5KW	283805	R88A-FIK114-RE	Buy on EAN
Servos, Series G / G5 RFI filter; 4.1A, 250VAC, for 400W models	283803	R88A-FIK104-RE	Buy on EAN
Servos, Accurax G5 Cable E / S 2m general purpose (for CN1)	323498	XW2Z-200J-B34	Buy on EAN
Servos, Accurax G5 Cable E / S 1m general purpose (for CN1)	323497	XW2Z-100J-B34	Buy on EAN
Servos, RFI filter G5; 4A, 400VAC, for models 600 to 1.5KW	303857	R88A-FIK304-RE	Buy on EAN
Servos, Drive Accurax G5 Analogue / Pulse Linear Motors, 750W, 200V	340298	R88D-KT08H-L	Buy on EAN
Servos, Drive Accurax G5 Analogue / Pulse Linear Motors, 400W, 200V	336933	R88D-KT04H-L	Buy on EAN
Servos, Accurax G5, 5m cable for external encoder (for CN4)	349416	R88A-CRKM005SR-E	Buy on EAN
Servos, RFI filter G5; 6A, 400VAC, for models 2.0KW	303858	R88A-FIK306-RE	Buy on EAN
Servos, RFI filter G5; 12A, 400VAC, for models from 3.0 to 5.0kW	303859	R88A-FIK312-RE	Buy on EAN
Servos, Drive Accurax G5 EtherCAT linear motors, 1kW, 400V	356058	R88D-KN10F-ECT-L	Buy on EAN
Servos, Drive Accurax G5 EtherCAT linear motors, 1.5KW, 400V	356059	R88D-KN15F-ECT-L	Buy on EAN
	324834	R88L-EC-GW-0709-APLS	Buy on EAN
Motion Control Trajexia - EtherCAT Master Module - 16 axes	352416	TJ2-ECT16	Buy on EAN
Motion Control Trajexia - EtherCAT Master Module - 64 axes	352417	TJ2-ECT64	Buy on EAN
Motion Control Trajexia - EtherCAT Master Module - 4 axes	352415	TJ2-ECT04	Buy on EAN
Servos, Drive Accurax G5 Analogue / Pulse Linear Motors, 750W, 200V	336936	R88D-KT15H-L	Buy on EAN
Machine Controllers, Controller 32 Machine NJ501 Axles	355310	NJ501-1400	Buy on EAN
Machine Controllers, Controller 64 Machine NJ501 Axles	355311	NJ501-1500	Buy on EAN

Machine Controllers, CPU Sysmac NJ Power Supply 100-240 VAC	355312	NJ-PA3001	Buy on EAN
Servos, Accurax G5, 10m cable for external encoder (for CN4)	349417	R88A-CRKM010SR-E	Buy on EAN
Servos, general purpose Cable 1m Accurax G5 servo ML2 and EtherCAT	349414	R88A-CPKB001S-E	Buy on EAN
Servos, general purpose Cable 2m for Accurax G5 servo ML2 and EtherCAT	349415	R88A-CPKB002S-E	Buy on EAN
Servos, Accurax G5, 20m cable for external encoder (for CN4)	349418	R88A-CRKM020SR-E	Buy on EAN
Cable (CN8) for safety functions [3m cable]	331798	R88A-CSK003S-E	Buy on EAN
Servos, Drive Accurax G5 ETHERCAT, 600W, 400V	352685	R88D-KN06F-ECT	Buy on EAN
Machine Controllers, CPU Sysmac NJ 24 VDC Power Supply	355313	NJ-PD3001	Buy on EAN
Servos, Accurax G5: Omron Linear Motor Coil Type FW0612	352728	R88L-EC-FW-0612-APLC	Buy on EAN
Servos, Accurax G5: Omron Type Linear Motor FW0306 without connectors	352720	R88L-EC-FW-0306-ANPC	Buy on EAN
Servos, Accurax G5: Omron Type Linear Motor FW0612 without connectors	352725	R88L-EC-FW-0612-ANPC	Buy on EAN
Servos, Accurax G5: Omron Type Linear Motor FW0606	352726	R88L-EC-FW-0606-APLC	Buy on EAN
Servos, Accurax G5: Omron Type Linear Motor FW0609	352727	R88L-EC-FW-0609-APLC	Buy on EAN
Servos, Accurax G5: Omron Type Linear Motor GW0709 without connectors	324831	R88L-EC-GW-0709-ANPS	Buy on EAN
Servos, Accurax G5: Omron Linear Motor Coil Type GW0306 (without connectors)	324816	R88L-EC-GW-0306-ANPS	Buy on EAN
Servos, Accurax G5: Omron Linear Motor Coil Type GW0303 (without connectors)	324815	R88L-EC-GW-0303-ANPS	Buy on EAN
Servos, Series G / G5 RFI filter; 2.4A, 250VAC, for models 100 and 200W	283802	R88A-FIK102-RE	Buy on EAN