At the end of this document you will find links to products related to this catalog. You can go directly to our shop by clicking HERE. HERE

Heat and cold resistant limit and basic switches

WL-_T, TZ

The limit switches WL-_T provide the ruggedness, reliability and the wide actuator range of the WL family and allow a direct usage in applications with temperatures from -40°C up to 120°C. For applications with even lower or higher temperatures the TZ basic switch provides reliable operation from -65° up to 400°C for sub-assemblies.

- -40°C to 120°C in rugged WL limit switch housing for direct usage
- -65°C to 400°C in TZ basic housing for sub-assemblies

Ordering Information

Actuator type		Connection method	Order code		
			WL_-TCG (-40° to 40°C)	WL_-THG (+5 to 120°C)	TZ-1G_ (-65° to 400°C)
	Roller lever (80° overtravel)	Screw terminal (with PG 13.5 conduit)*1	WLCA2-TCG	WLCA2-THG	-
	Roller lever (side mounting and 90° overtravel)		WLCA2-2NTCG	WLCA2-2NTHG	-
	Adjustable roller lever		WLCA12-TCG	WLCA12-THG	-
	Adjustable roller lever (side mounting and 90° overtravel)		WLCA12-2NTCG	WLCA12-2NTHG	-
	Top plunger		WLD-TCG	WLD-THG	-
	Top roller plunger		WLD2-TCG	WLD2-THG	-
	Top ball plunger		WLD3-TCG	WLD3-THG	-
	Horizontal plunger		WLSD-TCG	WLSD-THG	-
	Horizontal roller plunger		WLSD2-TCG	WLSD2-THG	-
	Horizontal ball plunger		WLSD3-TCG	WLSD3-THG	-

Actuator type		Connection method	Order code		
			WL_-TCG (-40° to 40°C)	WL_-THG (+5 to 120°C)	TZ-1G_ (-65° to 400°C)
	Coil spring	Screw terminal (with PG 13.5 conduit)[*1]	WLNJ-TCG	WLNJ-THG	-
	Coil spring (multi wire)		WLNJ-30TCG	WLNJ-30THG	-
	Steel wire		WLNJ-S2TCG	WLNJ-S2THG	-
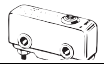	Pin plunger	Screw terminal[*2]	-	-	TZ-1G
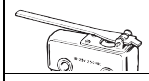	Hinge lever		-	-	TZ-1GV
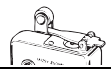	Hinge roller lever		-	-	TZ-1GV2

*1. Models with screw terminals with M20 conduit instead of PG13.5 are available. Contact your OMRON representative.
*2. Screw contacts are directly accessible. Additional protective measures or covers are required.

Model Number Legend

WL_-TCG and WL_-THG

WL□-T□□
1 2 3

1. Actuator

CA2: Roller lever
CA2-2N: Roller lever (overtravel 90° and side mounting)
CA12: Adjustable roller lever
CA12-2N: Adjustable roller lever (overtravel 90° and side mounting)
D: Top plunger
D2: Top roller plunger
D3: Top ball plunger
SD: Horizontal plunger
SD2: Horizontal roller plunger
SD3: Horizontal ball plunger
NJ: Coil spring
NJ-30: Coil spring, multi-wire
NJ-S2: Steel wire
Other actuators are available (contact your OMRON representative for details and availability)

2. Temperature range

C Cold resistant models down to -40°C
H Heat resistant models up to +120°C

3. Conduit

G PG13.5
Y M20

TZ

TZ-1G□
1

1. Actuator

Blank: Pin plunger
V: Hinge lever
V2: Hinge roller lever (models with short hinge are also available)

Specifications

Voltage and current rating

Model	Rated voltage	Rated current (TÜV: EN60947-5-1)	Non-inductive load			Inductive load[*1]		
			Resistive load	Lamp load (NC)[*1]	Lamp Load (NO)[*1]	Inductive load	Motor load (NC)	Motor load (NO)
WL	125 VAC	-	10 A[*2]	3 A	1.5 A	10 A	5 A	2.5 A
	250 VAC	2 A		2 A	1 A		3 A	1.5 A
	500 VAC	-		1.5 A	0.8 A	3 A	1.5 A	0.8 A
	8 VDC	-		6 A	3 A	10 A	6 A	
	14 VDC	-						
	30 VDC	-	6 A	4 A		6 A	4 A	
	48 VDC	2 A	-					
	125 VDC	-	0.8 A	0.2 A		0.8 A	0.2 A	
	250 VDC	-	0.4 A	0.1 A		0.4 A	0.1 A	
TZ	8 VDC	-	1 A	0.9 A	0.45 A	1 A	1.5 A	
	14 VDC	-						
	30 VDC	-						

[*1.] not rated for 90° overtravel models WLCA2-2N_ and WL-CA12-2N
[*2.] 5 A for 90° overtravel models WLCA2-2N_ and WL-CA12-2N

Note: The voltage and current ratings given are for steady-state current and measured at ambient temperature 20±2°C, ambient humidity 65±5% and switching frequency 20 times/min. Inductive loads have a power factor of 0.4 min (AC) and a time constant of 7 ms max. (DC). Lamp loads have an inrush current of 10 times the steady-state current and motor loads have an inrush current of 6 times the steady-state current.

General specifications[*1]

		WL_-TCG	WL_-THG	TZ-1G_
Durability[*1]	Mechanical	10,000,000 operations min		100,000 operations min
	Electrical	750,000 operations min[*2]		50,000 operations min
Operating speed	Pin plunger	-		0.05 mm to 1 m/s
	Roller lever	1 mm to 1 m/s		-
Operating frequency	Mechanical	120 operations / minute		60 operations / minute
	Electrical	30 operations / minute		20 operations / minute
Insulation resistance		100 MΩ min (at 500 VDC)		
Contact resistance (initial)		25 mΩ max		100 mΩ max
Dielectric strength		1,000 VAC, 50/60 Hz for 1 min between non-continuous terminals.[*3] 2,200 VAC, 50/60 Hz for 1 min/U_{imp} 2.5 kV non-current carrying metal part and ground and between each terminal and non-current carrying metal part.		1,000 VAC, 50/60 Hz for 1 min between terminals of same polarity. 1,500 VAC, 50/60 Hz for 1 min between current-carrying metal parts and ground and between each terminal and non-current-carrying metal parts.
Vibration resistance		10 to 55 Hz, 1.5 mm double amplitude (malfunction)[*4]		
Shock resistance	Destruction	1,000 m/s² min		500 m/s² min
	Malfunction	300 m/s² min		300 m/s² min
Ambient temperature	Operating[*5]	-40°C to 40°C	5°C to 120°C	-65°C to 400°C
Ambient humidity	Operating	95% max		35% to 85% max
Degree of protection		IEC 60529: IP67		IEC 60529: IP00
Weight		Approx. 275 g (example with WLCA2-TCG)		Approx. 45 to 54 g

[*1.] Values are acquired at 5° to 35°C operating temperature and 40% to 70% operating humidity
[*2.] 500,000 operations for 90° overtravel models WLCA2-2N_ and WLCA12-2N
[*3.] 500 VAC for 90° overtravel models WLCA2-2N_ and WLCA12-2N
[*4.] Not valid for coil spring and steel wire models WLNJ_
[*5.] with no icing

Additional specifications after EN60947-5-1 (WL types only)

Rated insulation voltage	250 V	-
Switching overvoltage	1,000 V max	-
Short circuit protective device	10 A fuse type gG or gl (IEC269)	-
Conditional short circuit current	100 A	-
Conventional enclosed thermal current	10 A, 0.5 A	-
Protection against electrical shock	Class I	-

Operating characteristics

Values for OF and RF are in N and values for PT, OT, MD and OP are in mm unless otherwise specified

Actuator models	WL_-													TZ-_		
	CA2	CA12	CA2-2N	CA12-2N	D	D2	D3	SD	SD2	SD3	NJ*1	NJ-30	NJ-S2	1G	1GV	1GV2
Operating force (OF max)	13.34		9.61		26.67			40.03			1.47		0.28	4.9	0.98	1.27
Release force (RF min)	2.23		1.18		8.92			8.89			-			1.12	0.14	0.2
Pre-travel (PT max)	15±5°		20°		1.7			2.8			20±10		40 ±20	0.4	3.5	2.6
Over travel (OT min)	30°		70°		6.4	5.6	4	6.4	5.6	4	-			0.13	4.6	3.5
Movement differential (MD max)	12°		10°		1						-			0.15	1.3	1
Operating position (OP)	-				34 ±0.8	44 ±0.8	44.5 ±0.8	40.6 ±0.8	54.2 ±0.8	54.1 ±0.8	-			15.6 ±0.6	18 ±1.2	28.6 ±1.2

*1. Values are taken from top end of wire or spring

Output circuit diagrams

WL

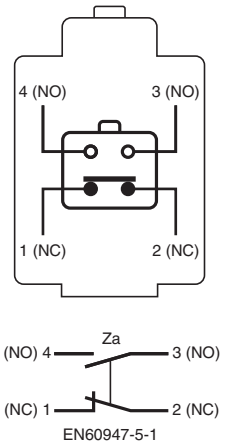

TZ

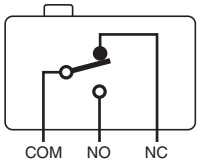

Nomenclature

WL

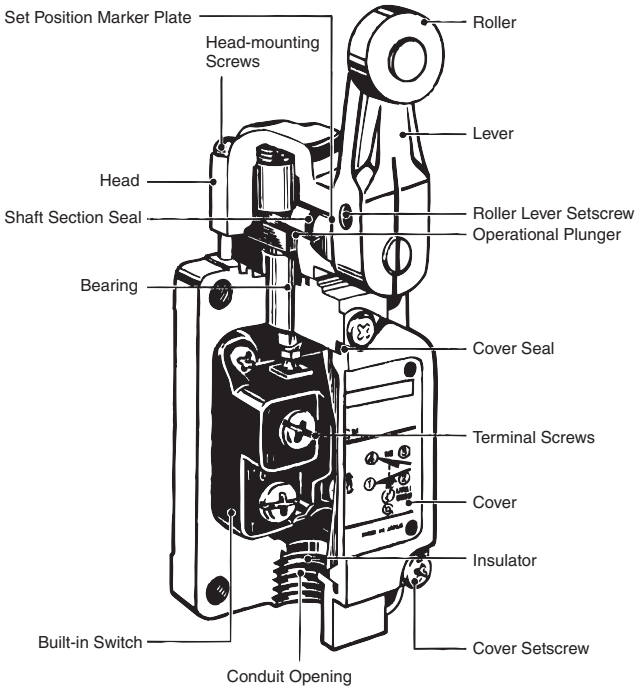

TZ

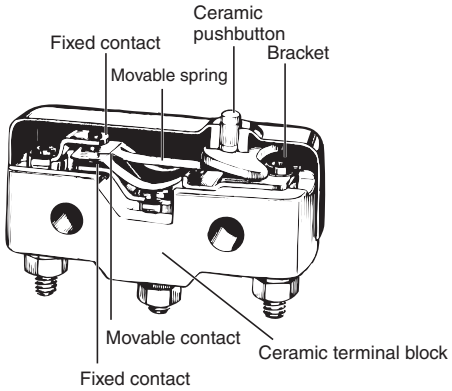

Alternative installation possibilities for WL models

Changing the installation position of the actuator

By loosening the Allen-head bolt on the actuator lever, the position of the actuator can be set anywhere within the 360°. With Lamp-equipped Switches, the actuator lever comes in contact with the top of the lamp cover, so use caution when rotating and setting the lever. When the lever only moves forwards and backwards, it will not contact the lamp cover.

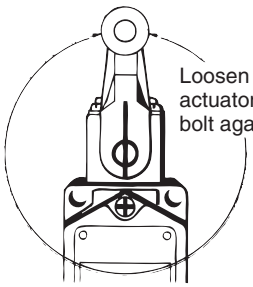

Changing the orientation of the Head

By removing the screws in the four corners of the Head, the Head can be set in any of the four directions. Be sure to change the plunger for internal operations at the same time. (The operational plunger does not need to be changed on overtravel general-purpose and high-sensitivity models.) The roller plunger can be set in either two positions at 90°. WLCA2-2N and WL01CA2-2N can only be set in either the forward or backward direction.

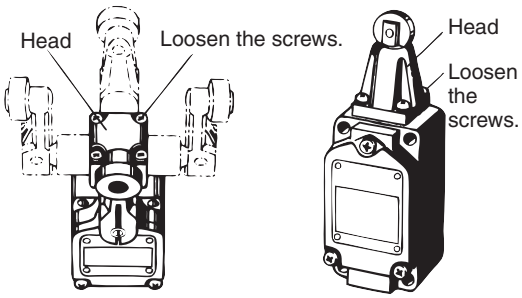

Changing the operating direction

By removing the Head on models which can operate on one-side only, and then changing the direction of the operational plunger, one of three operating directions can be selected. In the case of overtravel models, by loosening the rubber holder using either a coin or a flat-blade screwdriver, and changing the direction of the internal rubber section, one of three operating directions can be selected.

The tightening torque for the screws on the Head is 0.78 to 0.88 N·m.

The output of the Switch will be changed, regardless of which direction the lever is pushed.

The output of the Switch will only be changed when the lever is pushed in one direction.

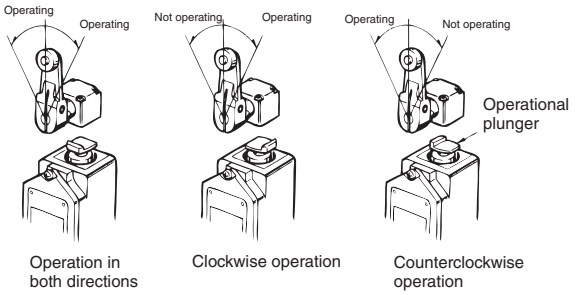

Cam direction changing procedure for side-installation models

Loosen the cam holder with a coin or screwdriver. Take out the cam from the Switch.

Change the direction of the cam as required by your intended operation and then reinstall the cam.

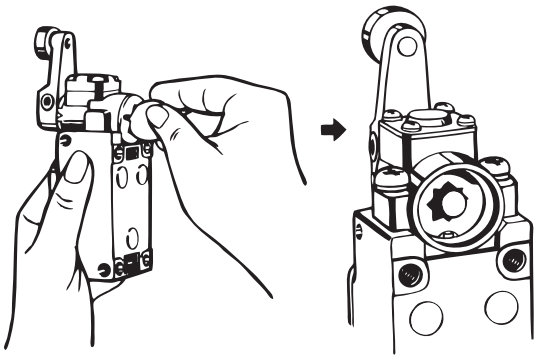

Relationship of cam to operation as observed from the rear of Switch

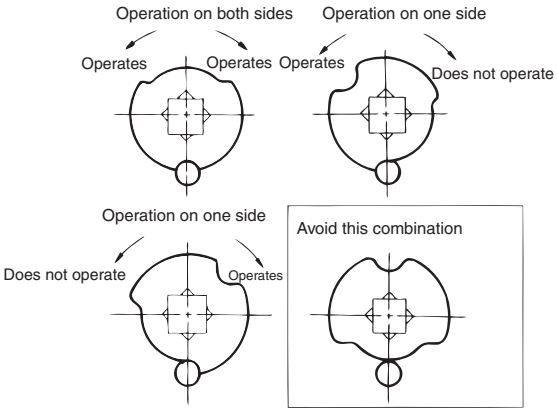

Installing the roller on the inside

By installing the roller lever in the opposite direction, the roller can be installed on the inside. (Set so that operation can be completed within a 180° level range.)

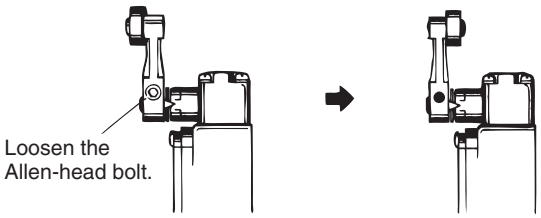

Selecting the roller position

There are four types of fork lever lock for use depending on the roller position.

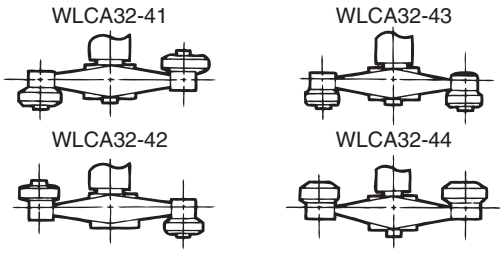

Adjusting the length of the rod or lever

The length of the rod or lever can be adjusted by loosening the Allen-head bolt.

WLCA12 etc.

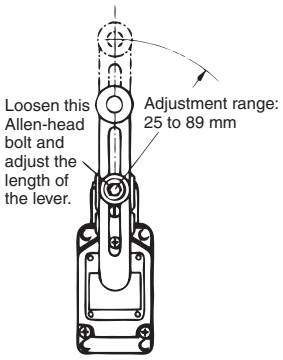

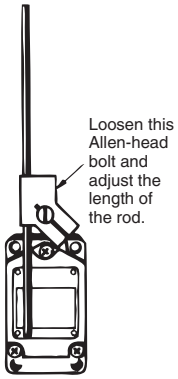

Dimensions

Note: All units are in millimeters unless otherwise indicated.

Roller Lever

WLCA2

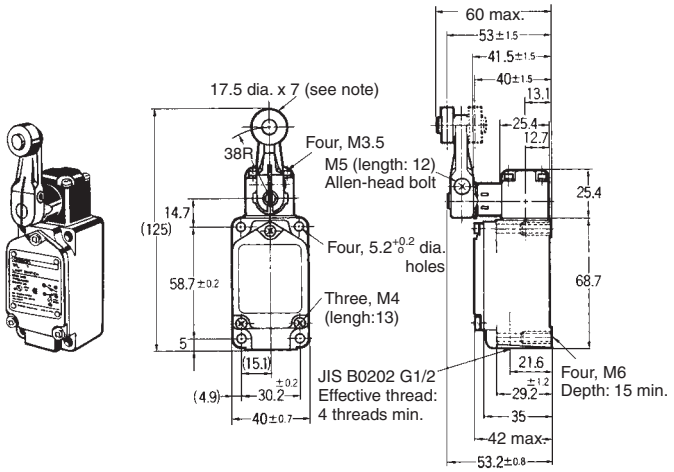

Note: Stainless sintered roller

WLCA2-2N

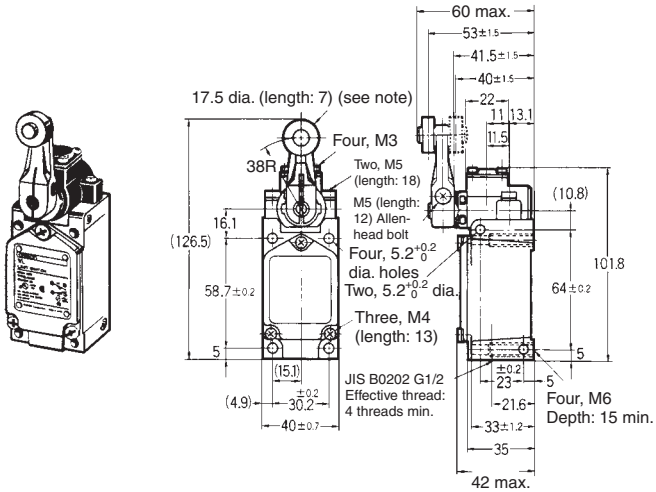

Note: Stainless sintered roller

Adjustable Roller Lever

WLCA12

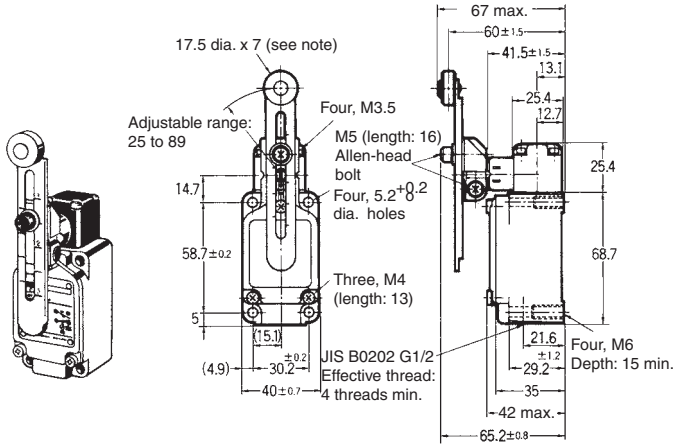

Note: Stainless sintered roller

WLCA12-2N

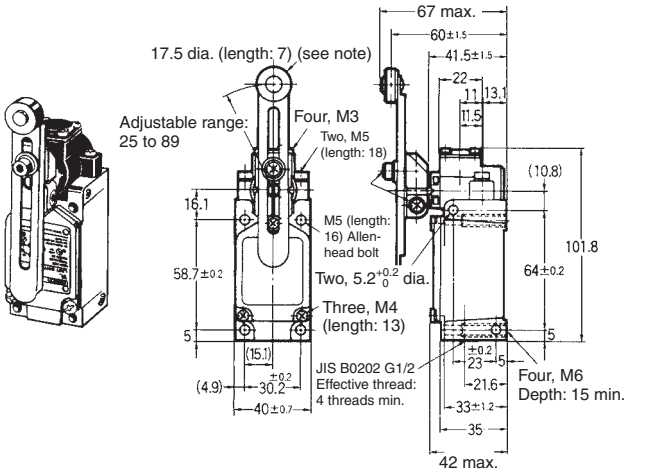

Note: Stainless sintered roller

Top Plunger

WLD

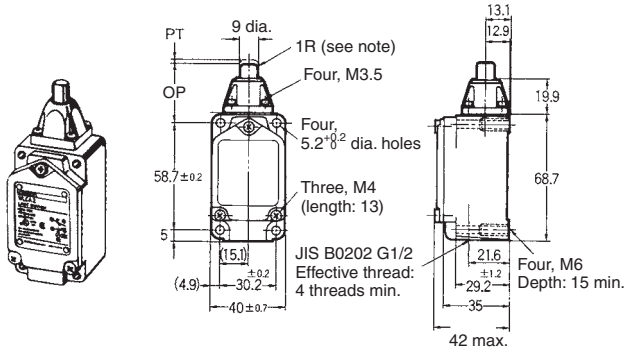

Note: Stainless steel plunger

Top-roller Plunger

WLD2

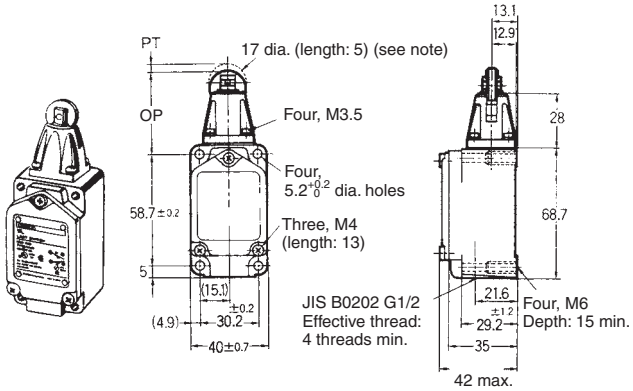

Note: Stainless sintered roller

Top-ball Plunger
WLD3

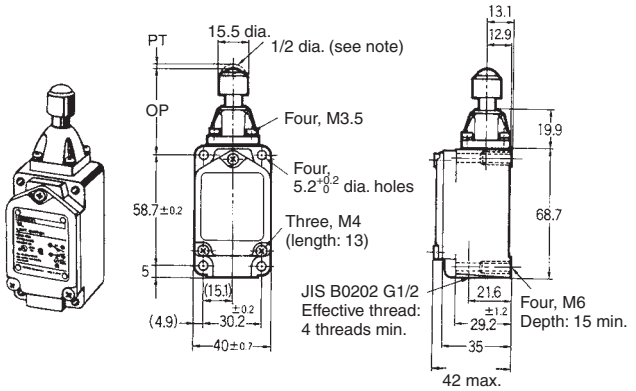

Note: Stainless steel ball

Horizontal Plunger
WLSD

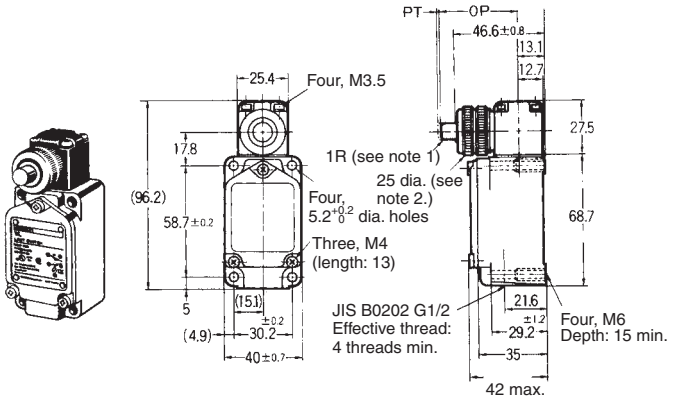

Note: 1 . Stainless steel plunger
2 . Cosmetic nuts.

Horizontal-roller Plunger
WLSD2

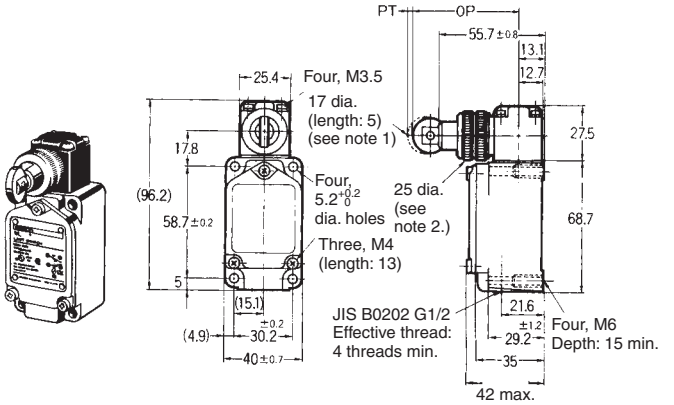

Note: 1 . Stainless sintered roller
2 . Cosmetic nuts.
3 . The WLSD21 model, which has the roller rotated by 90° is also available.

Horizontal-ball Plunger
WLSD3

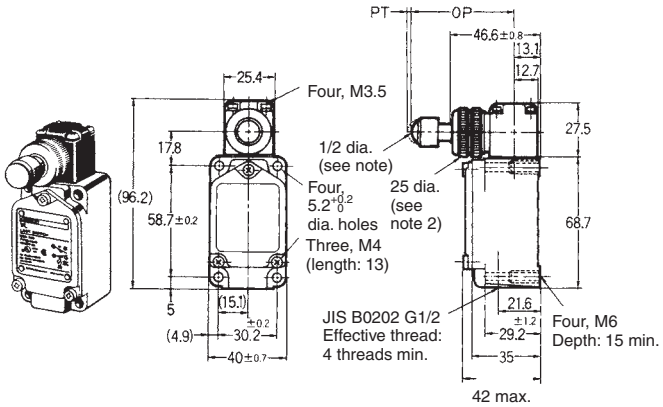

Note: 1 . Stainless steel ball
2 . Cosmetic nuts.

Coil Spring
WLNJ

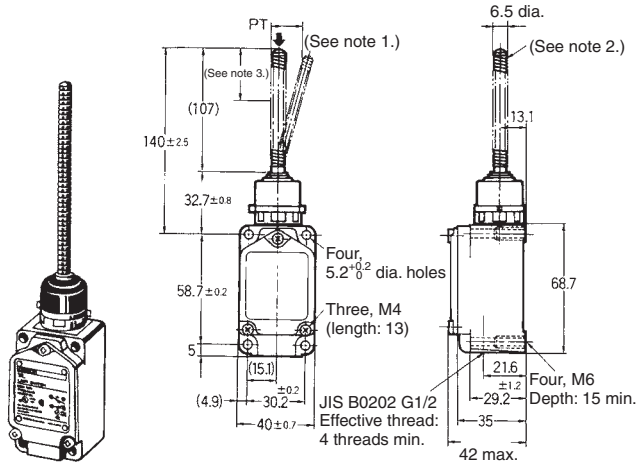

Note: 1 . The coil spring may be operated from any direction except the axial direction (↓).
2 . Stainless steel coil spring
3 . Optimum operating range of the coil spring is within 1/3 of the entire length from the top end.

Coli Spring (Multi-wire)
WLNJ-30

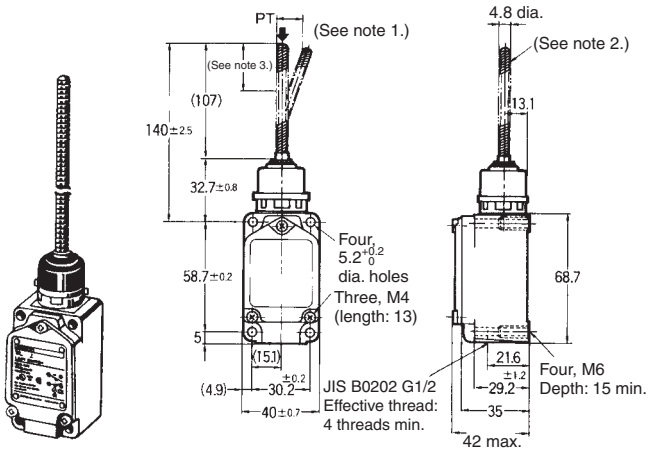

Note: 1 . The coil spring may be operated from any direction except the axial direction (↓).
2 . Piano wire coil
3 . Optimum operating range of the coil spring is within 1/3 of the entire length from the top end.

Steel Wire

WLNJ-S2

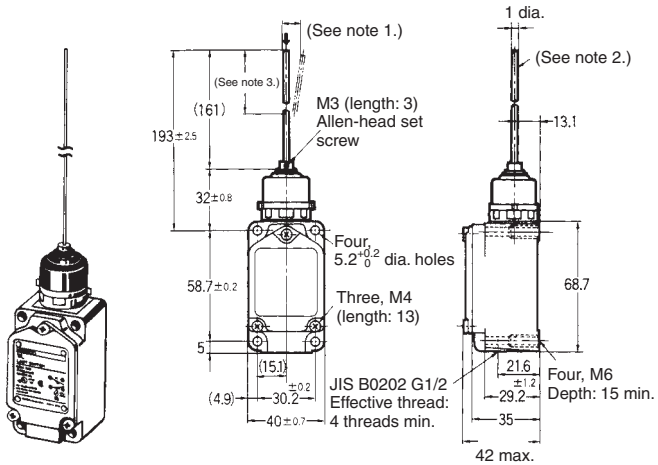

Note: 1 . The coil spring may be operated from any direction except the axial direction (↓).
2 . Stainless steel wire
3 . Optimum operating range of the coil spring is within 1/3 of the entire length from the top end.

Pin Plunger

TZ-1G

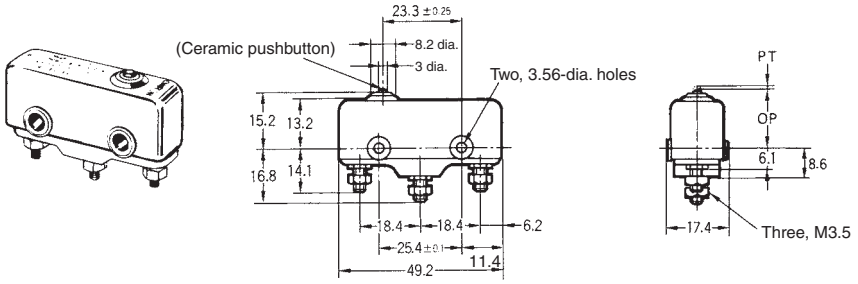

Hinge Lever

TZ-1GV

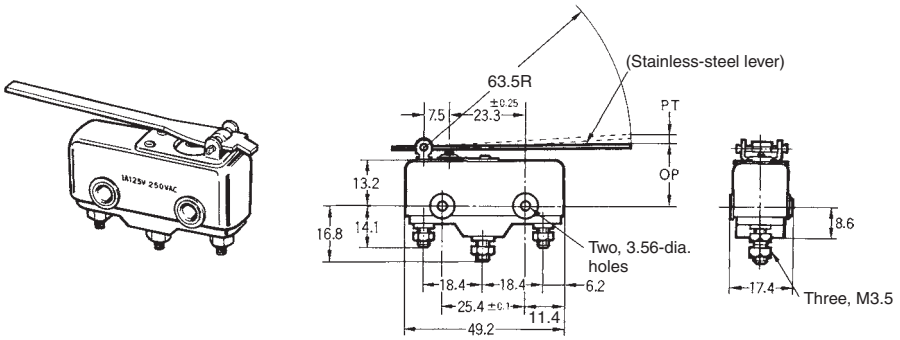

Hinge Roller Lever

TZ-1GV2

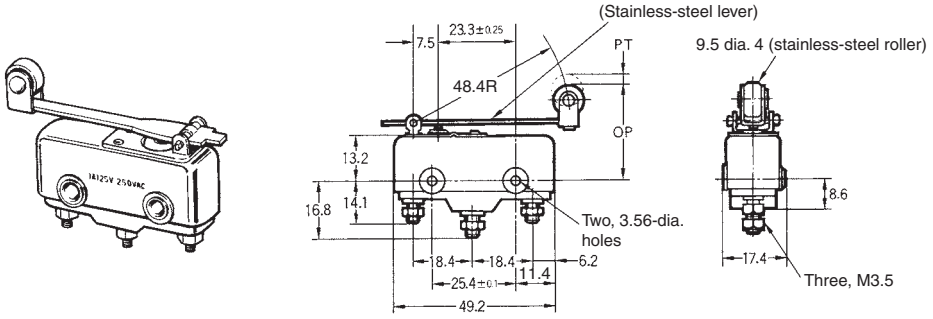

Precautions

WL

Correct Use

When a rod or wired-type actuator is used, do not touch the top end of the actuator. Doing so may result in injury.

Applicable models: WLHAL5 and WL01HAL5 Rod Spring Levers and WLNJ-S2 and WL01NJ-S2 Steel-wire Actuators.

A short-circuit may cause damage to the Switch, so insert a circuit breaker fuse, of 1.5 to 2 times the rated current, in parallel with the Switch. In order to meet EN approval ratings, use a 10 A fuse that corresponds to IEC269, either a gI or gG for general-purpose types and spatter-prevention models only.

When wiring terminal screws, use M4 round crimp terminals and tighten screws to the recommended torque. Wiring with broken wires, or the incorrect crimp terminals, or not tightening screws to the recommended torque can lead to short-circuits, leakage current, and fire.

When performing internal wiring there is a chance of short-circuit, leakage current, or fire, so be sure to protect the inside of the Switch from splashes of oil or water, corrosive gases, and cutting powder.

Using an inappropriate connector or assembling Switches incorrectly (assembly, tightening torque) can result in malfunction, leakage current, or fire, so be sure to read the instruction manual thoroughly beforehand.

Even when the connector is assembled and set correctly, the end of the cable and the inside of the Switch may come in contact. This can lead to malfunction, leakage current, or fire, so be sure to protect the end of the cable from splashes of oil or water and corrosive gases.

Environmental Precautions

When the Switch is used in locations subject to splashes of water or oil, the material of the seal, which ensures the sealing properties of the Switch, may undergo changes in shape and quality. This is due to deterioration (including expansion and contraction), and may result in reduced performance, ineffective return, and ineffective sealing (leading to ineffective contact, insulation, leakage current, and fire). Confirm the possible effects of the operating environment on the Switch before use.

Built-in Switch

Do not remove or replace the built-in switch. If the position of the built-in switch moves, it can cause reduced performance, and if the insulation sheet moves (separator), the insulation may become ineffective.

Tightening Torque

If screws are too loose they can lead to an early malfunction of the Switch, so ensure that all screws are tightened using the correct torque.

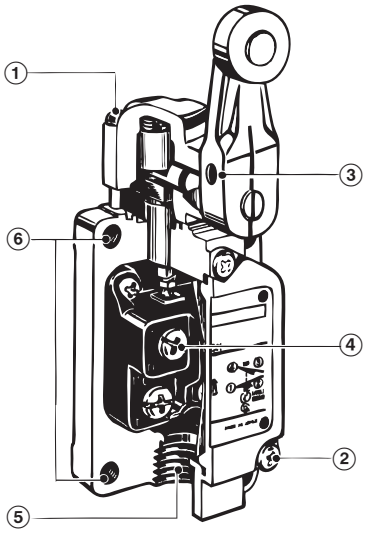

No.	Type	Torque
①	Head mounting screw	0.78 to 0.88 N·m
②	Cover mounting screw	1.18 to 1.37 N·m
③	Allen-head bolt (for securing the lever)	4.90 to 5.88 N·m
④	Terminal screw	0.59 to 0.78 N·m
⑤	Connector	1.77 to 2.16 N·m
⑥	Main Unit screws	4.90 to 5.88 N·m

In particular, when changing the direction of the Head, make sure that all screws are tightened again to the correct torque. Do not allow foreign objects to fall into the Switch.

Installing the Switch

To install the Switch, make a mounting panel, as shown in the following diagram, and tighten screws using the correct torque.

Standard/Overtravel model	Overtravel model (side installation)
Mounting holes Four, $5.2^{+0.2}_{0}$ dia. holes 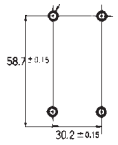 	Mounting holes Two, $5.2^{+0.2}_{0}$ dia. holes 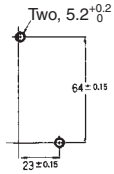

TZ

Correct Use

Handling

The Switch has a ceramic casing. Do not drop the Switch from a height of 30 cm or more. Doing so will break the casing.

Mounting

Be sure to turn OFF the power supply to the Switch before mounting, dismounting, wiring, or working on the Switch for maintenance. Not doing so may result in an electric shock or the Switch may burn.

Mount the switch with M3.5 stainless-steel screws with plane washer and spring washers securely.

Use M3.5 stainless-steel mounting screws with plane washers or spring washers to securely mount the Switch. Tighten the screws to a torque of 0.69 to 0.98 N·m {7 to 10 kgf·cm}.

Mounting Holes

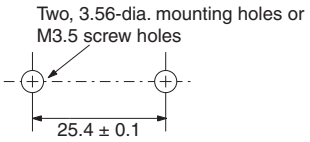

Connect nickel-plated solderless terminals to the TZ. Each terminal must be secured on the TZ with M3.5 nut.

Make sure that the ceramic case is free of metal powder or other impurities.

Operation

Do not modify the Actuator and change the operating position.

Make sure that the switching speed is not extremely slow or do not use the Switch so that the pushbutton will be set to a position between the FP and OP.

Make sure that the pin-type pushbutton and the switching stroke are on the same vertical line.

Make sure that the switching frequency or speed is within the specified range.

- If the switching speed is extremely slow, the contact may not be switched smoothly, which may result in a contact failure or contact welding.
- If the switching speed is extremely fast, switching shock may damage the Switch soon. If the switching frequency is too high, the contact may not catch up with the speed.

The rated permissible switching speed and frequency indicate the switching reliability of the Switch.

The life of a Switch is determined at the specified switching speed. The life varies with the switching speed and frequency even when they are within the permissible ranges. In order to determine the life of a Switch model to be applied to a particular use, it is best to conduct an appropriate durability test on some samples of the model under actual conditions.

Make sure that the actuator travel does not exceed the permissible OT position. The operating stroke must be set to 70% to 100% of the rated OT.

WARRANTY

OMRON's exclusive warranty is that the products are free from defects in materials and workmanship for a period of one year (or other period if specified) from date of sale by OMRON.

OMRON MAKES NO WARRANTY OR REPRESENTATION, EXPRESS OR IMPLIED, REGARDING NON-INFRINGEMENT, MERCHANTABILITY, OR FITNESS FOR PARTICULAR PURPOSE OF THE PRODUCTS. ANY BUYER OR USER ACKNOWLEDGES THAT THE BUYER OR USER ALONE HAS DETERMINED THAT THE PRODUCTS WILL SUITABLY MEET THE REQUIREMENTS OF THEIR INTENDED USE. OMRON DISCLAIMS ALL OTHER WARRANTIES, EXPRESS OR IMPLIED.

LIMITATIONS OF LIABILITY

OMRON SHALL NOT BE RESPONSIBLE FOR SPECIAL, INDIRECT, OR CONSEQUENTIAL DAMAGES, LOSS OF PROFITS OR COMMERCIAL LOSS IN ANY WAY CONNECTED WITH THE PRODUCTS, WHETHER SUCH CLAIM IS BASED ON CONTRACT, WARRANTY, NEGLIGENCE, OR STRICT LIABILITY.

In no event shall responsibility of OMRON for any act exceed the individual price of the product on which liability is asserted.

IN NO EVENT SHALL OMRON BE RESPONSIBLE FOR WARRANTY, REPAIR, OR OTHER CLAIMS REGARDING THE PRODUCTS UNLESS OMRON'S ANALYSIS CONFIRMS THAT THE PRODUCTS WERE PROPERLY HANDLED, STORED, INSTALLED, AND MAINTAINED AND NOT SUBJECT TO CONTAMINATION, ABUSE, MISUSE, OR INAPPROPRIATE MODIFICATION OR REPAIR.

SUITABILITY FOR USE

THE PRODUCTS CONTAINED IN THIS DOCUMENT ARE NOT SAFETY RATED. THEY ARE NOT DESIGNED OR RATED FOR ENSURING SAFETY OF PERSONS, AND SHOULD NOT BE RELIED UPON AS A SAFETY COMPONENT OR PROTECTIVE DEVICE FOR SUCH PURPOSES. Please refer to separate catalogs for OMRON's safety rated products.

OMRON shall not be responsible for conformity with any standards, codes, or regulations that apply to the combination of products in the customer's application or use of the product.

At the customer's request, OMRON will provide applicable third party certification documents identifying ratings and limitations of use that apply to the products. This information by itself is not sufficient for a complete determination of the suitability of the products in combination with the end product, machine, system, or other application or use.

The following are some examples of applications for which particular attention must be given. This is not intended to be an exhaustive list of all possible uses of the products, nor is it intended to imply that the uses listed may be suitable for the products:

- Outdoor use, uses involving potential chemical contamination or electrical interference, or conditions or uses not described in this document.
- Nuclear energy control systems, combustion systems, railroad systems, aviation systems, medical equipment, amusement machines, vehicles, safety equipment, and installations subject to separate industry or government regulations.
- Systems, machines, and equipment that could present a risk to life or property.

Please know and observe all prohibitions of use applicable to the products.

NEVER USE THE PRODUCTS FOR AN APPLICATION INVOLVING SERIOUS RISK TO LIFE OR PROPERTY WITHOUT ENSURING THAT THE SYSTEM AS A WHOLE HAS BEEN DESIGNED TO ADDRESS THE RISKS, AND THAT THE OMRON PRODUCT IS PROPERLY RATED AND INSTALLED FOR THE INTENDED USE WITHIN THE OVERALL EQUIPMENT OR SYSTEM.

PERFORMANCE DATA

Performance data given in this document is provided as a guide for the user in determining suitability and does not constitute a warranty. It may represent the result of OMRON's test conditions, and the users must correlate it to actual application requirements. Actual performance is subject to the OMRON Warranty and Limitations of Liability.

CHANGE IN SPECIFICATIONS

Product specifications and accessories may be changed at any time based on improvements and other reasons.

It is our practice to change model numbers when published ratings or features are changed, or when significant construction changes are made. However, some specifications of the product may be changed without any notice. When in doubt, special model numbers may be assigned to fix or establish key specifications for your application on your request. Please consult with your OMRON representative at any time to confirm actual specifications of purchased products.

DIMENSIONS AND WEIGHTS

Dimensions and weights are nominal and are not to be used for manufacturing purposes, even when tolerances are shown.

ERRORS AND OMISSIONS

The information in this document has been carefully checked and is believed to be accurate; however, no responsibility is assumed for clerical, typographical, or proofreading errors, or omissions.

PROGRAMMABLE PRODUCTS

OMRON shall not be responsible for the user's programming of a programmable product, or any consequence thereof.

Cat. No. C10E-EN-01

In the interest of product improvement, specifications are subject to change without notice.

OMRON EUROPE B.V.

Wegalaan 67-69,
NL-2132 JD, Hoofddorp,
The Netherlands
Phone: +31 23 568 13 00
Fax: +31 23 568 13 88
www.industrial.omron.eu

Automatización Eléctrica
Especialistas en Automatización

Below is a list of articles with direct links to our shop Electric Automation Network where you can see:

- Quote per purchase volume in real time.
- Online documentation and datasheets of all products.
- Estimated delivery time enquiry in real time.
- Logistics systems for the shipment of materials almost anywhere in the world.
- Purchasing management, order record and tracking of shipments.

To access the product, click on the green button.

Product	Code	Reference	Product link
Industrial Career Final / Push buttons, short roller lever 5 ° to 120 ° PG1 R38	108335	WLCA2-THG	Buy on EAN
Race Final Industrial / Push buttons, flexible rod helical Heat resistant D8.0mm	108369	WLNJ-TH	Buy on EAN
Industrial Career Final / Switches, DOUBLE BREAK LIMIT	108409	WLCA12	Buy on EAN
Race Final Industrial / Push buttons, adjustable roller lever Overtravel 90	108416	WLCA12-2N	Buy on EAN
Race Final Industrial / Switches, Standard Lever roller G1 / 2	108449	WLCA2	Buy on EAN
High temperature basic switch, hinge roller lever, 1 A	109865	TZ-1GV2	Buy on EAN
	156285	TZ-1GV	Buy on EAN
Race Final Industrial / Switches, Standard Lever roller G1 / 2 Lamp NC	108456	WLCA2-2	Buy on EAN
Industrial Relays, DPDT 10A Indic. Push-mechanical test	376687	MKS2PI DC6	Buy on EAN
Final Industrial / Push Carrera	206190	WLSD3	Buy on EAN
Industrial Career Final / Push buttons, superior Plunger High temperature PG13.5	108298	WLD-THG	Buy on EAN
Industrial Career Final / Push flexible resin rod D4,8mm	108375	WLNJ-30	Buy on EAN
Industrial Career Final / Push buttons, short roller lever R38 Low Temp	367250	WLCA2-TC	Buy on EAN
Industrial Career Final / Push buttons, horizontal roller Plunger G1 / 2	206189	WLSD	Buy on EAN
Final Industrial / Push Carrera	108327	WLCA12-THG	Buy on EAN

Industrial Career Final / Switches, Plunger roller G1 / 2	108347	WLD2	Buy on EAN
Race Final Industrial / Push buttons, steel rod D1.0mm Low Temperature PG13.5	108368	WLNJ-S2TCG	Buy on EAN
Race Final Industrial / Push, fork lock lever PG13.5	157900	WLCA32-41	Buy on EAN
Final Industrial / Push Carrera, fork lock lever G1 / 2	108384	WLCA32-43	Buy on EAN
Industrial Career Final / Push buttons, horizontal roller Plunger G1 / 2	152288	WLSD2	Buy on EAN
Industrial Career Final / Push buttons, limit switch double break	153369	WLCA12-2NTH	Buy on EAN