At the end of this document you will find links to products related to this catalog. You can go directly to our shop by clicking HERE. HERE

MEAN WELL

500W Single Output with PFC Function

USP-500 series

■ Features :

- Universal AC input / Full range
- Built in active PFC circuit compliance to EN61000-3-2
- Protections: Short circuit / Overload / Over voltage / Over temperature
- Free air convection for 400W and 500W with 23.5CFM forced air
- High power density 6.2w/in^3
- AC input active surge current limiting
- U-bracket low profile:41mm
- Current sharing(1+1) for 24V and 48V models (Optional)
- Built-in remote ON-OFF control
- Built-in remote sense function
- Built in DC OK active signal
- 3 years warranty

SPECIFICATION

MODEL		USP-500-5	USP-500-12	USP-500-15	USP-500-24	USP-500-48
OUTPUT	DC VOLTAGE	5V	12V	15V	24V	48V
	RATED CURRENT	80A	42A	33.5A	21A	10.5A
	CURRENT RANGE (convection)	0 ~ 60A	0 ~ 33A	0 ~ 27A	0 ~ 17A	0 ~ 8.5A
	CURRENT RANGE (23.5CFM FAN)	0 ~ 80A	0 ~ 42A	0 ~ 33.5A	0 ~ 21A	0 ~ 10.5A
	RATED POWER (convection)	300W	396W	405W	408W	408W
	RATED POWER (23.5CFM FAN)	400W	504W	502.5W	504W	504W
	RIPPLE & NOISE (max.) Note.2	80mVp-p	100mVp-p	100mVp-p	150mVp-p	150mVp-p
	VOLTAGE ADJ. RANGE	4.5 ~ 5.5V	10.8 ~ 13.2V	13.5 ~ 16.5V	21.6 ~ 27V	43.2 ~ 52.8V
	VOLTAGE TOLERANCE Note.3	±2.0%	±2.0%	±2.0%	±2.0%	±2.0%
	LINE REGULATION	±0.5%	±0.5%	±0.5%	±0.5%	±0.5%
	LOAD REGULATION	±2.0%	±1.0%	±1.0%	±1.0%	±1.0%
	SETUP, RISE TIME	1500ms, 80ms/230VAC 3100ms, 80ms/115VAC at full load				
	HOLD UP TIME (Typ.)	20ms/230VAC 20ms/115VAC at full load				
INPUT	VOLTAGE RANGE Note.5	90 ~ 264VAC 127 ~ 370VDC				
	FREQUENCY RANGE	47 ~ 63Hz				
	POWER FACTOR (Typ.)	0.95/230VAC 0.98/115VAC at full load				
	EFFICIENCY (Typ.)	85%	90%	90%	89%	90%
	AC CURRENT (Typ.)	6A/115VAC 2.6A/230VAC				
	INRUSH CURRENT (Typ.)	30A/115VAC 50A/230VAC				
	LEAKAGE CURRENT	<2mA / 240VAC				
PROTECTION	OVERLOAD	105 ~ 130% rated output power				
		Protection type : Constant current limiting, unit will shut down after 3 sec. ,re-power on to recover				
	OVER VOLTAGE	5.7 ~ 7V	13.5 ~ 16V	17 ~ 21V	27.8 ~ 32.4V	53 ~ 64.8V
		Protection type : Shut down o/p voltage, re-power to recover				
	OVER TEMPERATURE	85℃±5℃ (TSW1 : detect on heatsink of o/p diode)				
		95℃±5℃(5V),100℃(12V,15V,24V,48V) (TSW2 : detect on heatsink of power transistor)				
		Protection type : Shut down o/p voltage with auto-recovery				
FUNCTION	REMOTE ON/OFF CONTROL	RC+/RC-: 0~0.8V power on ; 4~10V power off				
	DC-OK SIGNAL	PSU turn on : 3.3V ~ 5.6V ; PSU turn off: 0 ~ 1V				
ENVIRONMENT	WORKING TEMP.	-20 ~ +70℃ (Refer to "Derating Curve")				
	WORKING HUMIDITY	20 ~ 90% RH non-condensing				
	STORAGE TEMP., HUMIDITY	-40 ~ +85℃, 10 ~ 95% RH				
	TEMP. COEFFICIENT	±0.03%/℃ (0 ~ 50℃)				
	VIBRATION	10 ~ 500Hz, 2G 10min./1cycle, 60min. each along X, Y, Z axes				
SAFETY & EMC (Note 4)	SAFETY STANDARDS	UL60950-1, TUV EN60950-1 approved				
	WITHSTAND VOLTAGE	I/P-O/P:3KVAC I/P-FG:2KVAC O/P-FG:0.5KVAC				
	ISOLATION RESISTANCE	I/P-O/P, I/P-FG, O/P-FG:100M Ohms / 500VDC / 25℃/ 70% RH				
	EMC EMISSION	Compliance to EN55022 (CISPR22) Class B, EN61000-3-2,-3				
	EMC IMMUNITY	Compliance to EN61000-4-2,3,4,5,6,8,11, EN55024, EN61000-6-2, heavy industry level, criteria A				
OTHERS	MTBF	129.8K hrs min. MIL-HDBK-217F (25℃)				
	DIMENSION	254*127*41mm (L*W*H)				
	PACKING	1.6Kg; 6pcs/10.6Kg/0.7CUFT				

NOTE

1. All parameters NOT specially mentioned are measured at 230VAC input, rated load and 25℃ of ambient temperature.
2. Ripple & noise are measured at 20MHz of bandwidth by using a 12" twisted pair-wire terminated with a 0.1uf & 47uf parallel capacitor.
3. Tolerance : includes set up tolerance, line regulation and load regulation.
4. The power supply is considered a component which will be installed into a final equipment. The final equipment must be re-confirmed that it still meets EMC directives. For guidance on how to perform these EMC tests, please refer to "EMI testing of component power supplies." (as available on http://www.meanwell.com)
5. Derating may be needed under low input voltages. Please check the derating curve for more details.

■ Mechanical Specification

Case No. 963A-D Unit:mm

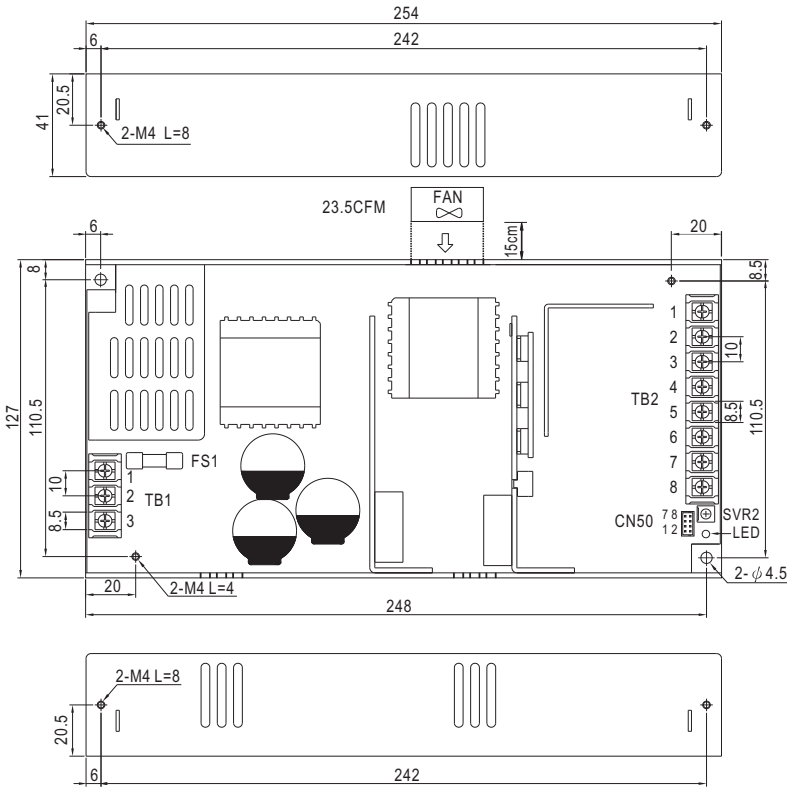

AC Input Terminal
Pin No. Assignment

Pin No.	Assignment
1	AC/L
2	AC/N
3	FG ⏚

DC Output Terminal
Pin No. Assignment

Pin No.	Assignment
1~4	DC OUTPUT -V
5~8	DC OUTPUT +V

Connector Pin No. Assignment (CN50) :
JST B8B-PHDSS or equivalent

Pin No.	Assignment	Mating Housing	Terminal
1	CS(Optional)	JST PHD-08VS or equivalent	JST SPHD-002T-P0.5 or equivalent
2,8	-S		
3	RC-		
4	RC+		
5	GND		
6	DC-OK		
7	+S		

■ Block Diagram

fosc : 100KHz

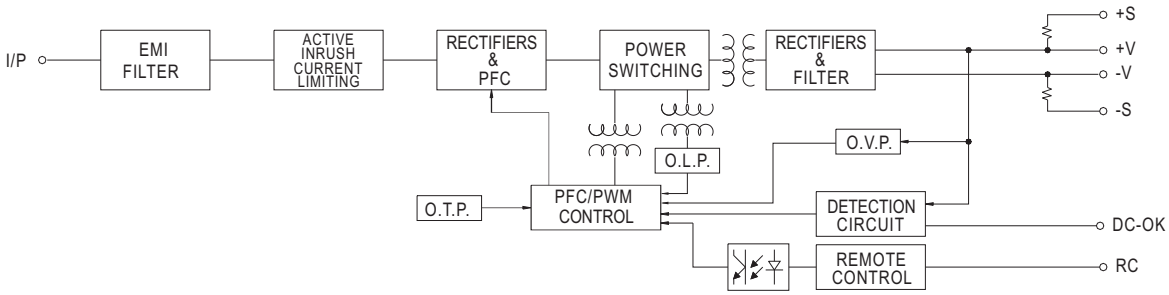

■ Derating Curve

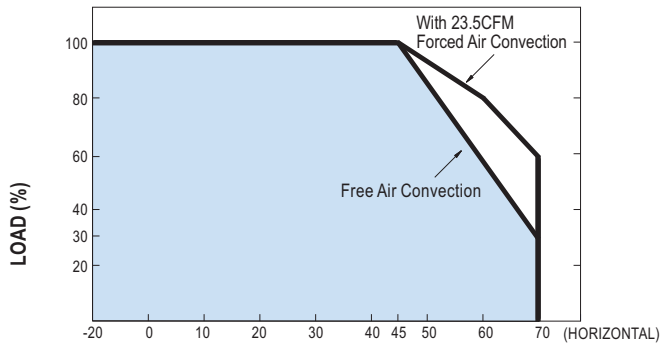

AMBIENT TEMPERATURE (℃)

■ Static Characteristics

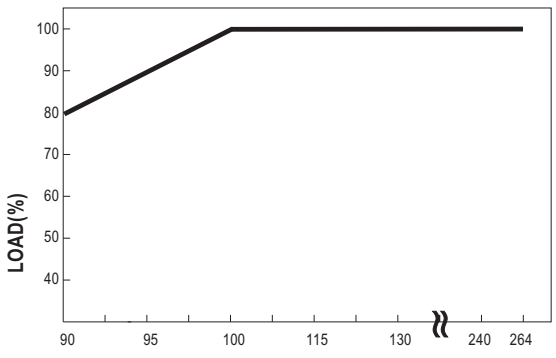

INPUT VOLTAGE (V) 60Hz

■ Function Description of CN50

Pin No.	Function	Description
1	CS (Optional)	Current sharing signal. When units are connected in parallel, the CS pins of the units should be connected to allow current balance between units.
2,8	-S	Negative sensing. The -S signal should be connected to the negative terminal of the load. The -S and +S leads should be twisted in pair to minimize noise pick-up effect. The maximum line drop compensation is 0.5V.
3	RC-	Return for RC+ signal input.
4	RC+	Turns the output on and off by electrical or dry contact between pin 4 (RC+) and pin 3 (RC-). 0~0.8V: Power ON, 4~10V: Power OFF.
5	GND	This pin connects to the negative terminal (-V). Return for DC_OK signal output.
6	DC-OK	DC-OK signal is a TTL level signal, referenced to pin6(DC-OK GND). High when PSU turns on.
7	+S	Positive sensing. The +S signal should be connected to the positive terminal of the load. The +S and -S leads should be twisted in pair to minimize noise pick-up effect. The maximum line drop compensation is 0.5V.

■ Function Manual

1.Remote Control

The PSU can be turned ON/OFF by using the "Remote Control" function.

Between RC+(pin4) and RC-(pin3)	Output Status
SW OFF (0 ~ 0.8V)	ON
SW ON (4 ~ 10V)	OFF

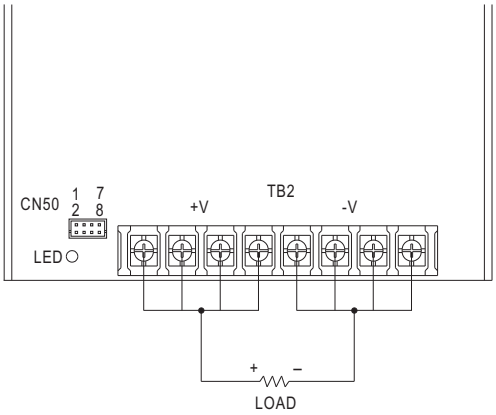

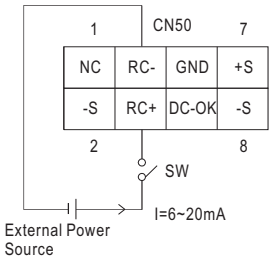

Fig 1.1

2.DC-OK Signal

DC-OK signal is a TTL level signal. High when PSU turns on.

Between DC-OK(pin6) and GND(pin5)	Output Status
3.3 ~ 5.6V	ON
0 ~ 1V	OFF

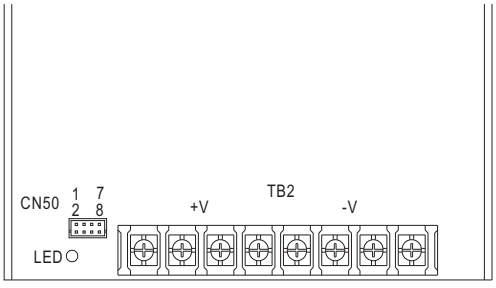

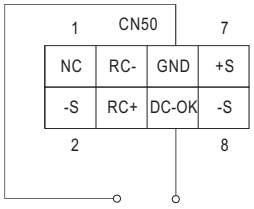

Fig 2.1

3.Remote Sense

The remote sensing compensates voltage drop on the load wiring up to 0.5V.

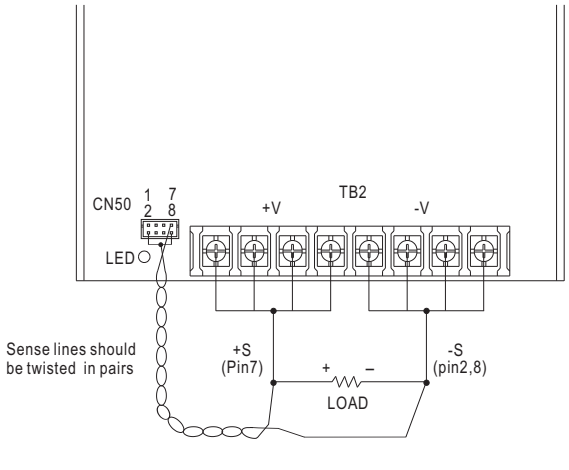

1	CN50		7
NC	RC-	GND	+S
-S	RC+	DC-OK	-S
2			8

Fig 3.1

4.Current Sharing with Remote Sensing (Optional for 24V & 48V)

USP-500 has the built-in active current sharing function and can be connected in parallel to provide higher output power :

(1)Parallel operation is available by connecting the units shown as below.
(+S,-S,CS and GND are connected mutually in parallel).

(2)Difference of output voltages among parallel units should be less than 2%.

(3)The total output current must not exceed the value determined by the following equation.
(output current at parallel operation)=(Rated current per unit)×(Number of unit)×0.9

(4)In parallel operation 2 units is the maximum, please consult the manufacturer for applications of more connecting in parallel.

(5)The power supplies should be paralleled using short and large diameter wiring and then connected to the load.

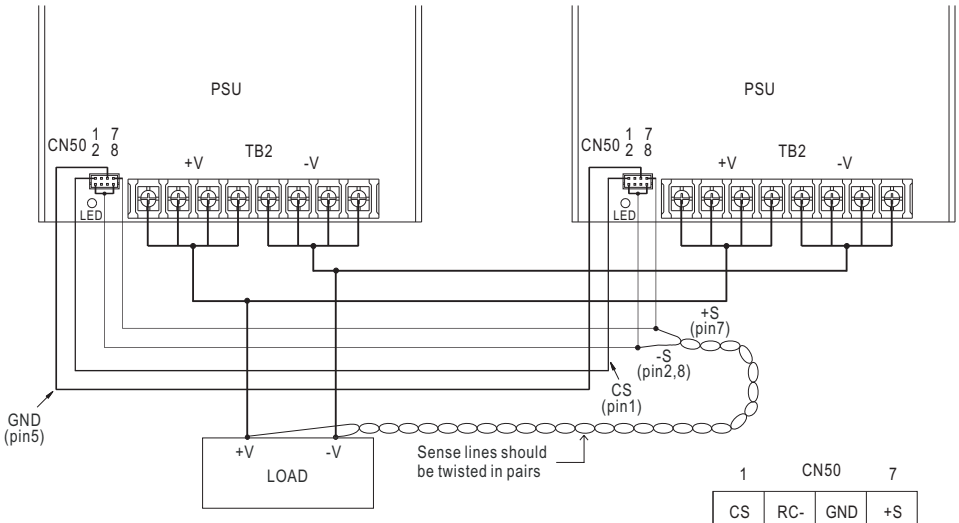

1	CN50		7
CS	RC-	GND	+S
-S	RC+	DC-OK	-S
2			8

Fig 4.1

Note : 1.In parallel connection, maybe only one unit (master) operate if the total output load is less than 2% of rated load condition.
The other PSU (slave) may go into standby mode and its output LED and relay will not turn on.
2.2% min. of dummy load is required.

Automatización Eléctrica
Especialistas en Automatización

Below is a list of articles with direct links to our shop Electric Automation Network where you can see:

- Quote per purchase volume in real time.
- Online documentation and datasheets of all products.
- Estimated delivery time enquiry in real time.
- Logistics systems for the shipment of materials almost anywhere in the world.
- Purchasing management, order record and tracking of shipments.

To access the product, click on the green button.

Product	Code	Reference	Product link
Input: 90-264 AC / 127-370 DC, Output: 1, V1: 12, A1: 42	USP50012	USP-500-12	Buy on EAN
Input: 90-264 AC / 127-370 DC, Output: 1, V1: 15, A1: 33,5	USP50015	USP-500-15	Buy on EAN
Input: 90-264 AC / 127-370 DC, Output: 1, V1: 24, A1: 21	USP50024	USP-500-24	Buy on EAN
Input: 90-264 AC / 127-370 DC, Output: 1, V1: 48, A1: 10,5	USP50048	USP-500-48	Buy on EAN
Input: 90-264 AC / 127-370 DC, Output: 1, V1: 5, A1: 80	USP5005	USP-500-5	Buy on EAN