On-Off switch, 3 pole, 160 A, flush mounting

Part no. P5-160/E
Article no. 280921

Powering Business Worldwide

Delivery programme

Product range			On-Off switch
Part group reference			P5
			with black thumb grip and front plate
Information about equipment supplied			Auxiliary contact or neutral conductor fitted by user.
Number of poles			3 pole
Auxiliary contacts			
		N/O	0
		N/C	0
Degree of Protection			Front IP65
Design			flush mounting
			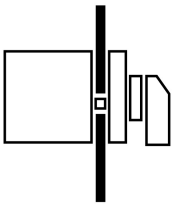
Contact sequence			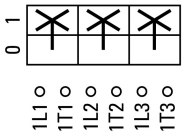
Front plate no.			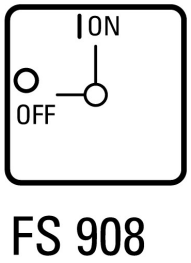
Motor rating AC-23A, 50 - 60 Hz			
400 V	P	kW	55
Rated uninterrupted current	I_u	A	160

Technical data

General

Standards			IEC/EN 60947, VDE 0660, IEC/EN 60204, CSA, UL Switch-disconnector according to IEC/EN 60947-3
Climatic proofing			Damp heat, constant, to IEC 60068-2-78 Damp heat, cyclic, to IEC 60068-2-30
Ambient temperature			
Open		°C	-25 - +50
Enclosed		°C	-25 - +40
Overvoltage category/pollution degree			III/3
Rated impulse withstand voltage	U_{imp}	V AC	8000
Mounting position			As required
Protection against direct contact when actuated from front (EN 50274)			Finger and back-of-hand proof

Contacts

Mechanical variables			
Number of poles			3 pole
Auxiliary contacts			
		N/O	0
		N/C	0
Electrical characteristics			
Rated operational voltage	U_e	V AC	690
Rated uninterrupted current	I_u	A	160
Note on rated uninterrupted current I_u			Rated uninterrupted current Iu is specified for max. cross-section.
Load rating with intermittent operation, class 12			
AB 25 % DF		x I_e	2
AB 40 % DF		x I_e	1.6
AB 60 % DF		x I_e	1.3
Short-circuit rating			
Fuse		A gG/gL	160
Rated short-time withstand current (1 s current)	I_{cw}	A_{rms}	3000
Note on rated short-time withstand current Icw			Current for a time of 1 second
Rated conditional short-circuit current	Iq	kA	30

Switching capacity

cos φ rated making capacity as per IEC 60947-3		A	1050
Rated breaking capacity cos φ to IEC 60947-3		A	
230 V		A	900
400/415 V		A	850
500 V		A	850
690 V		A	340
Safe isolation to EN 61140			
between the contacts		V AC	440
Current heat loss per contact at I_e		W	10
Lifespan, mechanical	Operations	x 10^6	> 0.1
Maximum operating frequency	Operations/h		50
AC			
AC-3			
Rating, motor load switch	P	kW	
220 V 230 V	P	kW	30
400 V 415 V	P	kW	45
500 V	P	kW	55
690 V	P	kW	37
Rated operational current motor load switch			
230 V	I_e	A	103
400V 415 V	I_e	A	85
690 V	I_e	A	42
AC-21A			
Rated operational current switch			
440 V	I_e	A	160
AC-23A			
Motor rating AC-23A, 50 - 60 Hz	P	kW	
230 V	P	kW	30
400 V 415 V	P	kW	55
500 V	P	kW	75
690 V	P	kW	37
Rated operational current motor load switch			
230 V	I_e	A	103
400 V 415 V	I_e	A	105

690 V	I_e	A	42
DC			
DC-1, Load-break switches L/R = 1 ms			
Rated operational current	I_e	A	160
Voltage per contact pair in series		V	42
DC-23A, motor load switch L/R = 15 ms			
24 V			
Rated operational current	I_e	A	160
Contacts		Quantity	3
48 V			
Rated operational current	I_e	A	160
Contacts		Quantity	3
60 V			
Rated operational current	I_e	A	160
Contacts		Quantity	3
120 V			
Rated operational current	I_e	A	50
Contacts		Quantity	3
Control circuit reliability at 24 V DC, 10 mA	Fault probability	H_F	$< 10^{-5}$, < 1 fault in 100000 operations

Terminal capacities

Solid or stranded		mm^2	1 x (10 - 95) 2 x (10 - 35)
Flexible with ferrules to DIN 46228		mm^2	1 x (16 - 70) 2 x (16 - 25)
Copper strip	Number of segments x width x thickness	mm	6 x 9 x 0.8 (2 flat conductors)
Terminal screw			Allen screw 5
Max. tightening torque		Nm	14

Technical safety parameters:

Notes			$B10_d$ values as per EN ISO 13849-1, table C1

Design verification as per IEC/EN 61439

Technical data for design verification			
Rated operational current for specified heat dissipation	I_n	A	160
Heat dissipation per pole, current-dependent	P_{vid}	W	10
Equipment heat dissipation, current-dependent	P_{vid}	W	0
Static heat dissipation, non-current-dependent	P_{vs}	W	0
Heat dissipation capacity	P_{diss}	W	0
Operating ambient temperature min.		°C	-25
Operating ambient temperature max.		°C	50
IEC/EN 61439 design verification			
10.2 Strength of materials and parts			
10.2.2 Corrosion resistance			Meets the product standard's requirements.
10.2.3.1 Verification of thermal stability of enclosures			Meets the product standard's requirements.
10.2.3.2 Verification of resistance of insulating materials to normal heat			Meets the product standard's requirements.
10.2.3.3 Verification of resistance of insulating materials to abnormal heat and fire due to internal electric effects			Meets the product standard's requirements.
10.2.4 Resistance to ultra-violet (UV) radiation			Please enquire
10.2.5 Lifting			Does not apply, since the entire switchgear needs to be evaluated.
10.2.6 Mechanical impact			Does not apply, since the entire switchgear needs to be evaluated.
10.2.7 Inscriptions			Meets the product standard's requirements.
10.3 Degree of protection of ASSEMBLIES			Does not apply, since the entire switchgear needs to be evaluated.
10.4 Clearances and creepage distances			Meets the product standard's requirements.
10.5 Protection against electric shock			Does not apply, since the entire switchgear needs to be evaluated.
10.6 Incorporation of switching devices and components			Does not apply, since the entire switchgear needs to be evaluated.

10.7 Internal electrical circuits and connections			Is the panel builder's responsibility.
10.8 Connections for external conductors			Is the panel builder's responsibility.
10.9 Insulation properties			
10.9.2 Power-frequency electric strength			Is the panel builder's responsibility.
10.9.3 Impulse withstand voltage			Is the panel builder's responsibility.
10.9.4 Testing of enclosures made of insulating material			Is the panel builder's responsibility.
10.10 Temperature rise			The panel builder is responsible for the temperature rise calculation. Eaton will provide heat dissipation data for the devices.
10.11 Short-circuit rating			Is the panel builder's responsibility. The specifications for the switchgear must be observed.
10.12 Electromagnetic compatibility			Is the panel builder's responsibility. The specifications for the switchgear must be observed.
10.13 Mechanical function			The device meets the requirements, provided the information in the instruction leaflet (IL) is observed.

Technical data ETIM 6.0

Low-voltage industrial components (EG000017) / Switch disconnector (EC000216)			
Electric engineering, automation, process control engineering / Low-voltage switch technology / Off-load switch, circuit breaker, control switch / Switch disconnector (ecl@ss8.1-27-37-14-03 [AKF060010])			
Version as main switch			No
Version as maintenance-/service switch			No
Version as safety switch			No
Version as emergency stop installation			No
Version as reversing switch			No
Max. rated operation voltage Ue AC		V	690
Rated operating voltage		V	690 - 690
Rated permanent current Iu		A	160
Rated permanent current at AC-21, 400 V		A	160
Rated operation power at AC-3, 400 V		kW	45
Rated short-time withstand current Icw		kA	3
Rated operation power at AC-23, 400 V		kW	55
Switching power at 400 V		kW	55
Conditioned rated short-circuit current Iq		kA	30
Number of poles			3
Number of auxiliary contacts as normally closed contact			0
Number of auxiliary contacts as normally open contact			0
Number of auxiliary contacts as change-over contact			0
Motor drive optional			No
Motor drive integrated			No
Voltage release optional			No
Device construction			Built-in device fixed built-in technique
Suitable for ground mounting			No
Suitable for front mounting 4-hole			Yes
Suitable for front mounting center			No
Suitable for distribution board installation			No
Suitable for intermediate mounting			No
Colour control element			Black
Type of control element			Toggle
Interlockable			No
Type of electrical connection of main circuit			Frame clamp
Degree of protection (IP), front side			IP65

Approvals

Product Standards			UL 508; CSA-C22.2 No. 14-05; CSA-C22.2 No. 94; IEC/EN 60947-3; CE marking
UL File No.			E36332
UL Category Control No.			NLRV
CSA File No.			223805

CSA Class No.			3211-05
North America Certification			UL listed, CSA certified
Suitable for			Branch circuits, suitable as motor disconnect
Degree of Protection			IEC: IP65; UL/CSA Type 1, 12

Dimensions

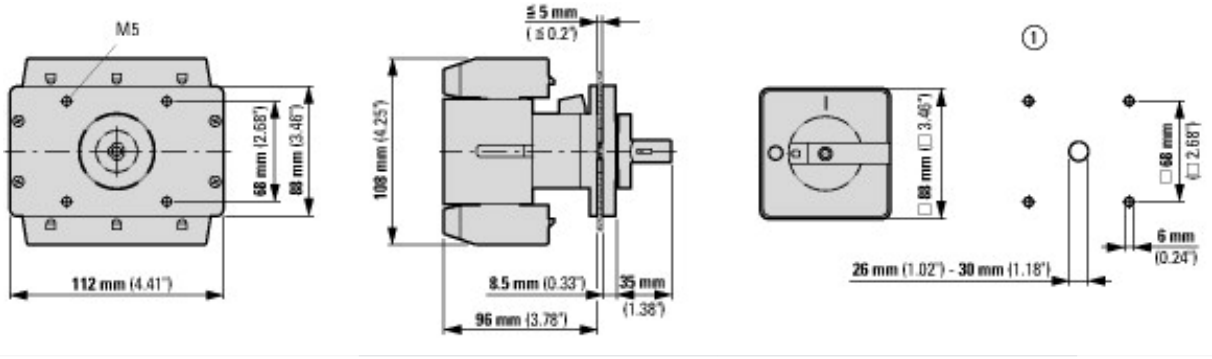

1 Drilling dimensions door

Additional product information (links)

Technical overview cam switch, switch-disconnector	http://de.ecat.moeller.net/flip-cat/?edition=HPLTEv1&startpage=4.2
System overview cam switch T	http://de.ecat.moeller.net/flip-cat/?edition=HPLTEv1&startpage=4.4
System overview switch-disconnector P	http://de.ecat.moeller.net/flip-cat/?edition=HPLTEv1&startpage=4.6
Key to part numbers Cam switch	http://de.ecat.moeller.net/flip-cat/?edition=HPLTEv1&startpage=4.8
Key to part numbers Switch-disconnector	http://de.ecat.moeller.net/flip-cat/?edition=HPLTEv1&startpage=4.8
Switches for ATEX	http://www.coopercrouse-hinds.eu/en/products/25-ex-safety-and-main-current-switches.html

© 11/2015 by Eaton Industries GmbH