Base for vertical mounting with column in one direction only

Part no.	**SL7-CB-FW**
Article no.	**171450**
Catalog No.	**SL7-CB-FW**

Powering Business Worldwide™

Delivery programme

Product range			SL7 signal towers
Basic function			Base module
Connection technique			Spring-loaded terminals
Mounting type			for vertical mounting
Fitted with			One-sided base with bracket including cover
Number of modules			max. 5 modules
Colour			
			black
			[redacted]
For use with			SL7-L-… SL7-BL-… SL7-FL-… SL7-AP-…
Connection to SmartWire-DT			no

Technical data

General

Standards			IEC/EN 60947-5-1
Climatic proofing			Damp heat, constant, to IEC 60068-2-78 Damp heat, cyclic, to IEC 60069-2-30
Mounting position			for vertical mounting
Mechanical shock resistance		g	> 15 according to IEC 60068-2-27 Shock duration 11 ms Sinusoidal
IEC degree of protection			IP66 IEC/EN 60529
Protection type UL			Type 4, 4X, 13
Cap colour			
			black
Ambient temperature		°C	-30 - +60
Number of signal elements			Max. 5 with standard base Max. 10 with base for mounting on both sides
Terminal capacity			
Solid or flexible conductor		mm^2	0.13 - 2.5
Flexible with ferrule with plastic collar		mm^2	0.25 - 1.5
			AWG 24 - AWG 14

Contacts

Rated impulse withstand voltage	U_{imp}	V AC	4000
Rated insulation voltage	U_i	V	250
Overvoltage category/pollution degree			III/3

modules

Voltage levels			24 V AC/DC ± 10 % 110/120 V AC ± 10 % 230/240 V AC ± 10 %

Design verification as per IEC/EN 61439

Technical data for design verification			
Operating ambient temperature min.		°C	-30

Operating ambient temperature max.		°C	60

Technical data ETIM 6.0

Low-voltage industrial components (EG000017) / Connection module for signal tower (EC001152)			
Electric engineering, automation, process control engineering / Low-voltage switch technology / Command and alarm device / Signal column element, connection module (ecl@ss8.1-27-37-12-32 [AKF050011])			
Connection type auxiliary circuit			Spring clamp connection
Tube mounting possible			No
Bracket mounting possible			Yes
Floor mounting possible			Yes
Colour			-
Suitable for AS interface			No

Approvals

Product Standards			IEC/EN 60947-5-1; UL 508; CSA-C22.2 No. 14-10; CSA-C22.2 No. 94-91; CE marking
UL File No.			E29184
UL Category Control No.			NKCR
CSA File No.			UL report applies to both US and Canada
CSA Class No.			NKCR7
North America Certification			UL listed, certified by UL for use in Canada
Degree of Protection			UL Type 4, 4X, 13

Dimensions

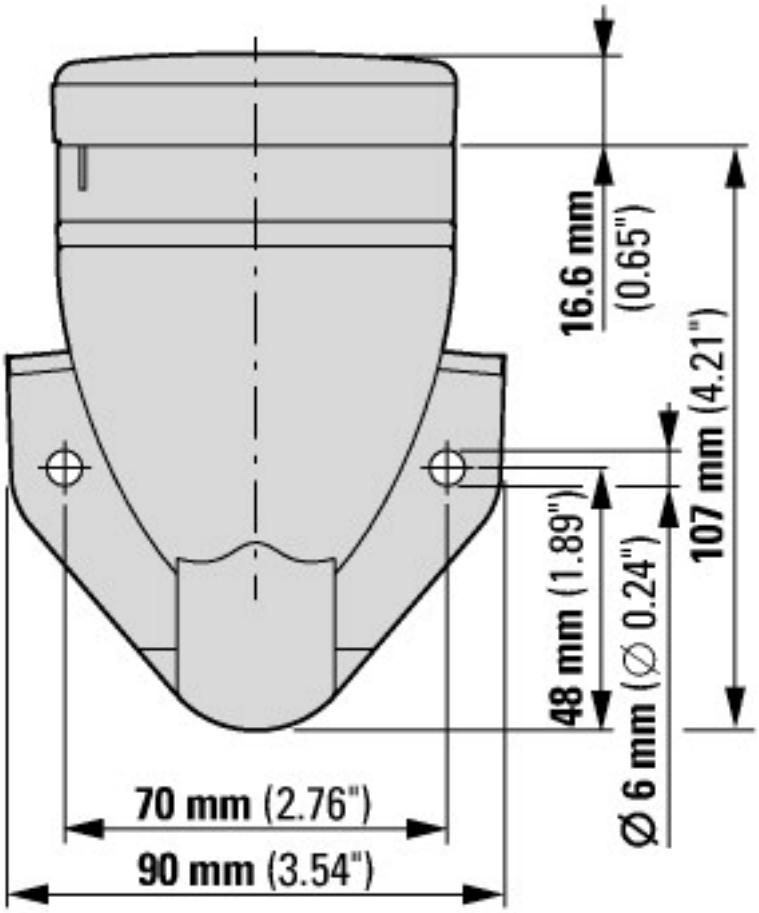

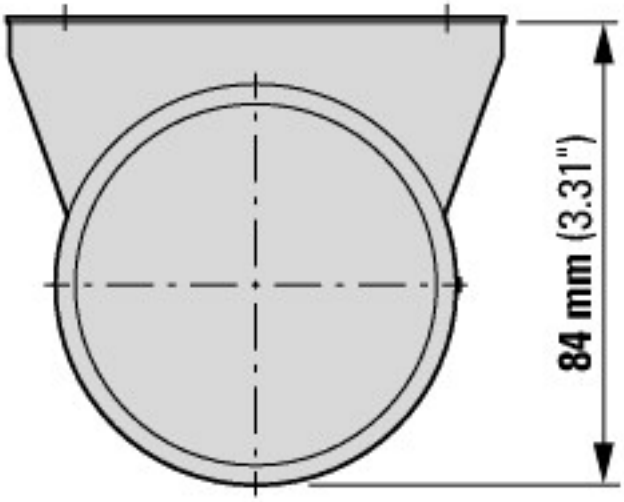

Additional product information (links)

IL047003ZU Signal Towers SL7: Base units	
IL047003ZU Signal Towers SL7: Base units	ftp://ftp.moeller.net/DOCUMENTATION/AWA_INSTRUCTIONS/IL047003ZU2013_02.pdf

© 12/2015 by Eaton Industries GmbH