LED multistrobe light, red 24V, H.P.

Part no.	**SL7-FL24-R-HPM**
Article no.	**171277**
Catalog No.	**SL7-FL24-R-HPM**

Powering Business Worldwide

Delivery programme

Product range			SL7 signal towers
Basic function			Multi-strobe light module
Degree of Protection			IP66
Rated operational voltage	U_e	V	24 V AC/DC
Description			High-performance LED for maximum signaling effect
Type of light			Multistrobe light
Light elements			High Performance LED
Colour			
			Red
Function			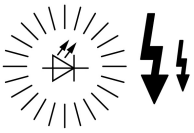
Connection to SmartWire-DT			no

Technical data

General

Standards			IEC/EN 60947-5-1
Climatic proofing			Damp heat, constant, to IEC 60068-2-78 Damp heat, cyclic, to IEC 60069-2-30
Mounting position			As required
Mechanical shock resistance		g	> 15 according to IEC 60068-2-27 Shock duration 11 ms Sinusoidal
IEC degree of protection			IP66 IEC/EN 60529
Protection type UL			Type 4, 4X, 13
Material			Enclosure: Polycarbonate (PC), black Cap: Polycarbonate (PC)
Cap colour			
			Red
Ambient temperature		°C	-30 - +60
Number of signal elements			Max. 5 with standard base Max. 10 with base for mounting on both sides
Weight		g	80

Contacts

Rated impulse withstand voltage	U_{imp}	V AC	4000
Rated insulation voltage	U_i	V	250
Overvoltage category/pollution degree			III/3

modules

Type of light			Multistrobe light
Light elements			High Performance LED
Flashing/strobe frequency			1 - 2.6 Hz
Leakage current		A	< 0.003
lifespan		h	> 50000
Transmission angle			360°

Current-/power consumption			
24 V AC/DC		A	0.260 - 0.265
Voltage levels			18-30 V DC/18-26 V AC

Design verification as per IEC/EN 61439

Technical data for design verification			
Operating ambient temperature min.		°C	-30
Operating ambient temperature max.		°C	60

Technical data ETIM 6.0

Low-voltage industrial components (EG000017) / Optical module for signal tower (EC000232)			
Electric engineering, automation, process control engineering / Low-voltage switch technology / Command and alarm device / Optical module for signal tower (ecl@ss8.1-27-37-12-20 [AKF038011])			
Function			Flash light
Colour			Red
Outer diameter		mm	73
Degree of protection (IP)			IP66
Operating voltage at AC 50 Hz		V	18 - 26
Operating voltage at AC 60 Hz		V	18 - 26
Operating voltage at DC		V	18 - 30
Voltage type			AC/DC
Type of lamp			LED
Colour housing			Black

Approvals

Product Standards			IEC/EN 60947-5-1; UL 508; CSA-C22.2 No. 14-10; CSA-C22.2 No. 94-91; CE marking
UL File No.			E29184
UL Category Control No.			NKCR
CSA File No.			UL report applies to both US and Canada
CSA Class No.			NKCR7
North America Certification			UL listed, certified by UL for use in Canada
Degree of Protection			UL Type 4, 4X, 13

Dimensions

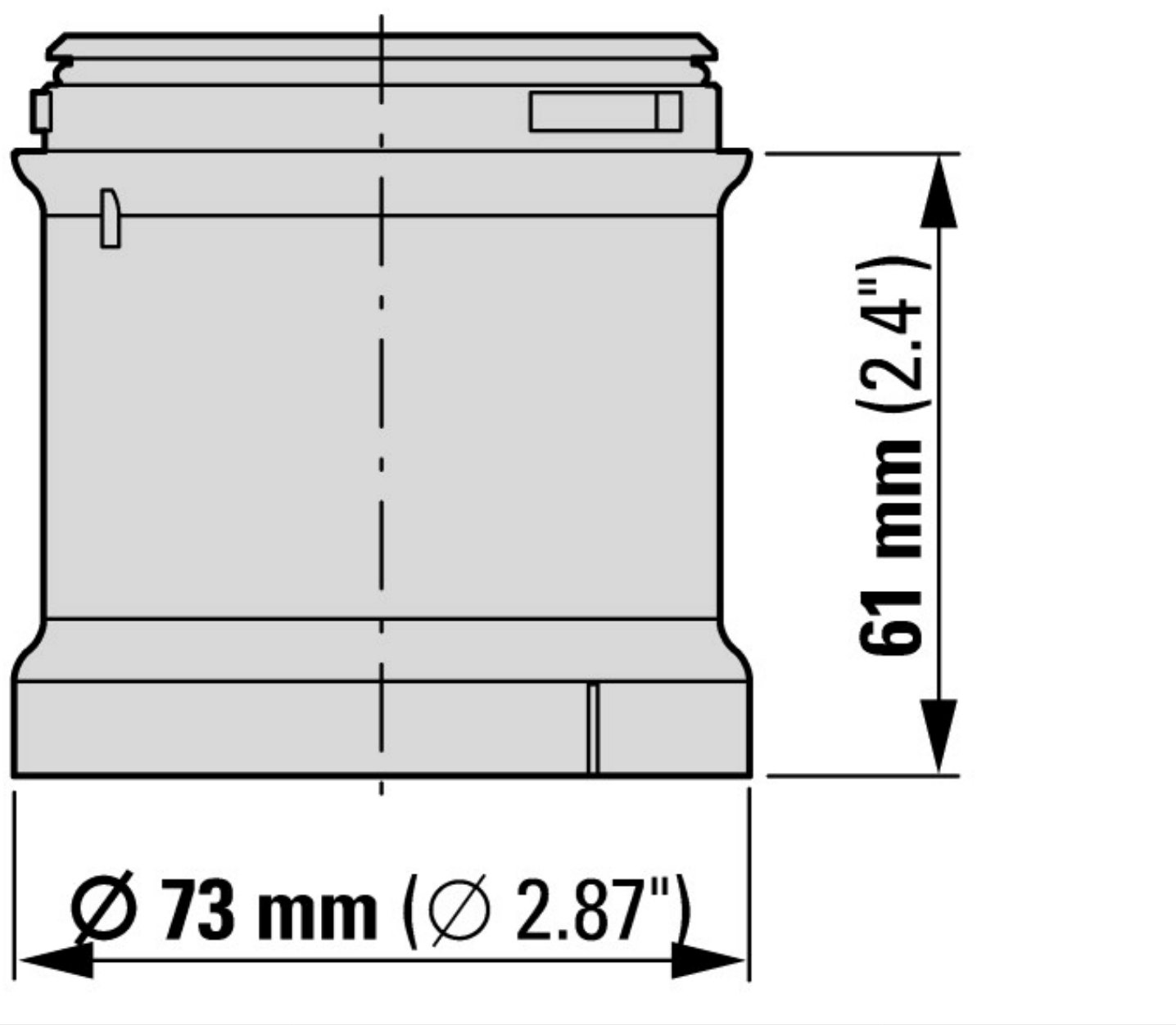

© 11/2015 by Eaton Industries GmbH