Proximity switch, inductive, 1N/O, Sn=5mm, 3L, 10-30VDC, NPN, M18, insulated material, line 2m

Powering Business Worldwide

Part no.	**E55CAL18T110**
Article no.	**135824**
Catalog No.	**E55CAL18T110**

Delivery programme

Basic function			Inductive Sensors
Product range			E55 Limit Switch Style Series
Connection			3-wire
Design (outer dimensions)		mm	M18 x 1
Rated operational voltage	U_e		10 - 30 V DC
Rated switching distance	S_n	mm	5
Type of mounting			Flush
Switching type			NPN
For connection of:			2 m connection cable
Contacts			
N/O = Normally open			1 N/O
Material			Insulated material
Degree of Protection			IP66

Technical data

General

Standards			IEC/EN 60947-5-2
Ambient temperature			-25 - +70
Mechanical shock resistance		g	30 Shock duration 11 ms
Degree of Protection			IP66

Characteristics

Rated switching distance			
Rated switching distance	S_n	mm	5
Repetition accuracy of S_n		%	10
Temperature drift of S_n		%	10
Switching hysteresis of S_n		%	20
Rated operational voltage	U_e		10 - 30 V DC
Supply frequency			50 - 60
Residual ripple of U_e		%	10
Maximum load current	I_e	mA	< 200
Operating current in the switched state at 24 V DC	I_b	mA	3
Voltage drop at I_e	U_d	V	8
Switching Frequency		Hz	1000
Switching state display		LED	Red
Protective functions			Short-circuit protective device Protection against polarity reversal
Connection			3-wire
Contacts			
N/O = Normally open			1 N/O
Style			
Design (outer dimensions)		mm	M18 x 1
For connection of:			2 m connection cable
Material			Insulated material

Design verification as per IEC/EN 61439

Technical data for design verification			
Operating ambient temperature min.		°C	-25

Operating ambient temperature max.	°C	70

Approvals

Product Standards		CE marking
Max. Voltage Rating		30 V DC
Degree of Protection		IEC: IP66; UL/CSA: NEMA 4, 4X, 13

Dimensions

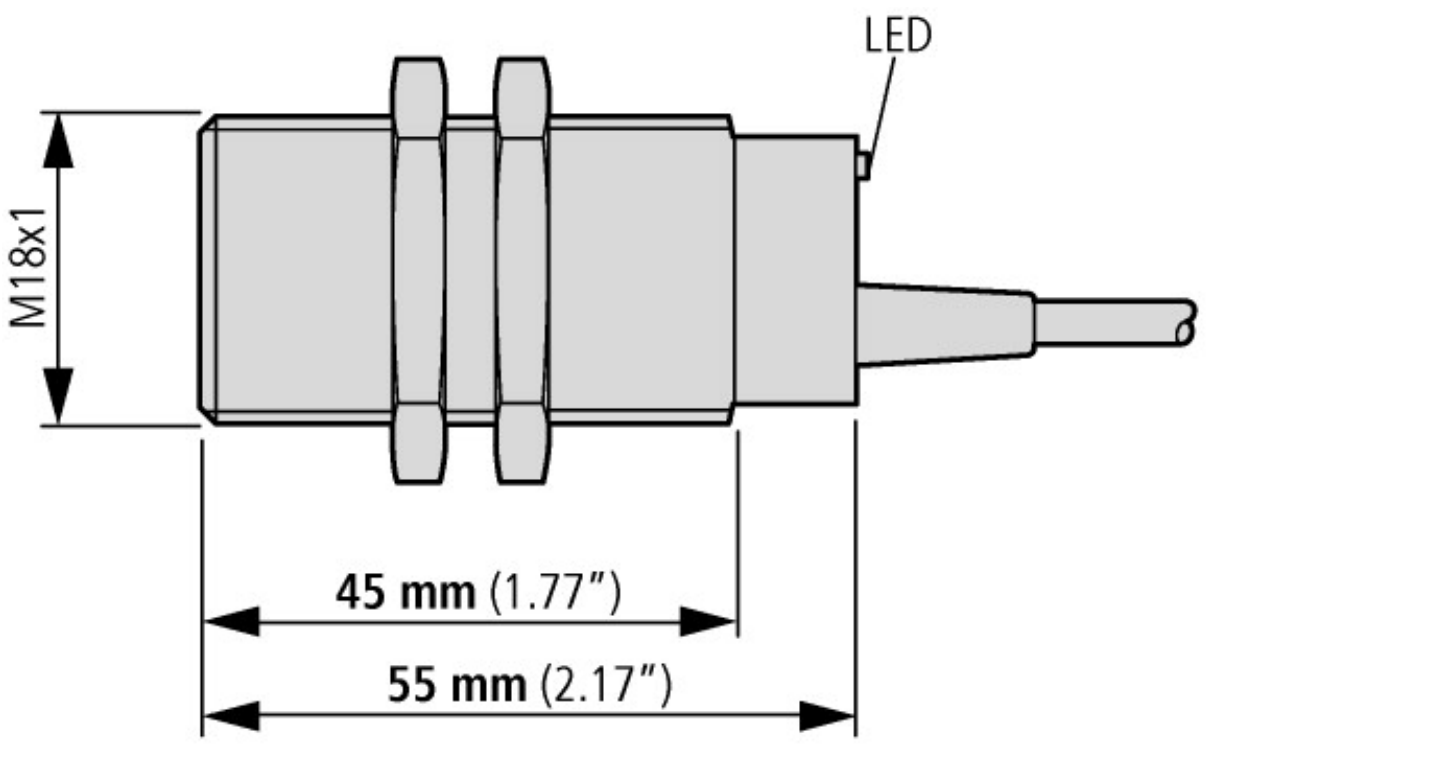

Additional product information (links)

IL05301005Z E55 Series Barrel-Style Inductive Sensors	
IL05301005Z E55 Series Barrel-Style Inductive Sensors	ftp://ftp.moeller.net/DOCUMENTATION/AWA_INSTRUCTIONS/IL05301005Z2012_08.pdf

© 12/2015 by Eaton Industries GmbH