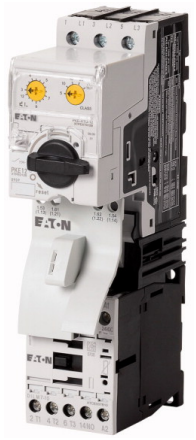

DOL starter, 3p, 4.0kW/400V/AC3, 100kA, protection electronic

Part no. MSC-DE-12-M9(230V50HZ)
Article no. 121741
Catalog No. XTSE012B009BFNL

Powering Business Worldwide

Delivery programme

Basic function			DOL starters (complete devices)
Basic device			MSC
			IE3
Notes			Also suitable for motors with efficiency class IE3. IE3-ready devices are identified by the logo on their packaging.
Motor ratings			
Motor rating			
AC-3			
380 V 400 V 415 V	P	kW	4
Rated operational current			
AC-3			
400 V	I_e	A	8.5
Rated short-circuit current 380 - 400 V	I_q	kA	100
Setting range			
Setting range of overload releases	I_r	A	3 - 12
Short-circuit releases			
Non-delayed	I_{rm}	A	186
Coordination			Type of coordination “1”
Contact sequence			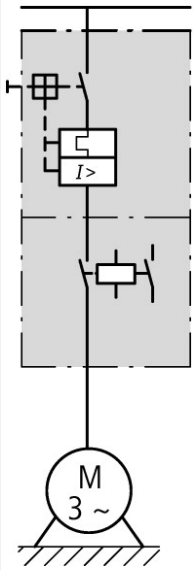
Actuating voltage			230 V 50 Hz

			AC voltage

Motor-protective circuit-breakers PKE12/XTU-12

Contactor DILM9-10(...)

DOL starter wiring set
Mechanical connection element and electrical electric contact module PKZM0-XDM12

Notes

The DOL starter (complete devices) consists of a PKE motor protective circuit breaker and a DILM contactor.

With the adapter-less top-hat rail mounting of starters up to 15 A, only the motor-protective circuit-breaker on the top-hat rail requires an adapter.

The contactors are provided with mechanical support via a mechanical connection element.

Control wire guide with max. 6 conductors up to 2.5°mm external diameter or 4 conductors up to 3.5°mm external diameter.

From 16 A, the motor-protective circuit-breaker and contactor are mounted on the top-hat rail adapter plate.

The connection of the main circuit between PKE and contactor is established with electrical contact modules.

When using DILA-XHIT… auxiliary contacts with MSC-DE-... DOL starters, the plug-in electrical connectors can be removed without removing the front-mounted auxiliary contact.

Cannot be combined with NHI-E…PKZ0-C.

MSC-DEA... DOL starters are prepared for communications via SmartWire-DT. In order to be used this way, they first need to be expanded with the PKE-SWD-32 communications module.

Motor output/rated motor current

Motor rating	Rated motor current AC-3		
	220 V	380 V	415 V
	230 V	400 V	
	240 V		
	I_q = 100 kA	I_q =100 kA	I_q = 50 kA
P	I	I	I
kW	A	A	A
0.75	3.2	-	-
1.1	4.6	-	-
1.5	6.3	3.6	3.6
2.2	8.7	5	5
3	-	6.6	6.6
4	-	8.5	8.5

Technical data

General

Standards			IEC/EN 60947-4-1, VDE 0660

Main conducting paths

Rated impulse withstand voltage	U_{imp}	V AC	6000
Overvoltage category/pollution degree			III/3
Rated operational voltage	U_e	V	230 - 415
Rated operational current			
Open, 3-pole: 50 – 60 Hz			
380 V 400 V	I_e	A	9

Additional technical data

Motor protective circuit breaker PKZM0, PKE			PKZM0 motor-protective circuit-breakers, see motor-protective circuit-breakers/ PKZM0 product group DILM contactors, see contactors product group DILET timing relay, ETR, see contactors, electronic timing relays product group
DILM contactors			
Power consumption of the coil in a cold state and 1.0 x U_c			
Dual-voltage coil 50 Hz	Sealing	W	1.2

Design verification as per IEC/EN 61439

Technical data for design verification			
Rated operational current for specified heat dissipation	I_n	A	9
Heat dissipation per pole, current-dependent	P_{vid}	W	0.7
Equipment heat dissipation, current-dependent	P_{vid}	W	2.2
Static heat dissipation, non-current-dependent	P_{vs}	W	1.4
Heat dissipation capacity	P_{diss}	W	0
Operating ambient temperature min.		°C	-25
Operating ambient temperature max.		°C	55
IEC/EN 61439 design verification			
10.2 Strength of materials and parts			

10.2.2 Corrosion resistance			Meets the product standard's requirements.
10.2.3.1 Verification of thermal stability of enclosures			Meets the product standard's requirements.
10.2.3.2 Verification of resistance of insulating materials to normal heat			Meets the product standard's requirements.
10.2.3.3 Verification of resistance of insulating materials to abnormal heat and fire due to internal electric effects			Meets the product standard's requirements.
10.2.4 Resistance to ultra-violet (UV) radiation			Meets the product standard's requirements.
10.2.5 Lifting			Does not apply, since the entire switchgear needs to be evaluated.
10.2.6 Mechanical impact			Does not apply, since the entire switchgear needs to be evaluated.
10.2.7 Inscriptions			Meets the product standard's requirements.
10.3 Degree of protection of ASSEMBLIES			Does not apply, since the entire switchgear needs to be evaluated.
10.4 Clearances and creepage distances			Meets the product standard's requirements.
10.5 Protection against electric shock			Does not apply, since the entire switchgear needs to be evaluated.
10.6 Incorporation of switching devices and components			Does not apply, since the entire switchgear needs to be evaluated.
10.7 Internal electrical circuits and connections			Is the panel builder's responsibility.
10.8 Connections for external conductors			Is the panel builder's responsibility.
10.9 Insulation properties			
10.9.2 Power-frequency electric strength			Is the panel builder's responsibility.
10.9.3 Impulse withstand voltage			Is the panel builder's responsibility.
10.9.4 Testing of enclosures made of insulating material			Is the panel builder's responsibility.
10.10 Temperature rise			The panel builder is responsible for the temperature rise calculation. Eaton will provide heat dissipation data for the devices.
10.11 Short-circuit rating			Is the panel builder's responsibility. The specifications for the switchgear must be observed.
10.12 Electromagnetic compatibility			Is the panel builder's responsibility. The specifications for the switchgear must be observed.
10.13 Mechanical function			The device meets the requirements, provided the information in the instruction leaflet (IL) is observed.

Technical data ETIM 6.0

Low-voltage industrial components (EG000017) / Motor starter/Motor starter combination (EC001037)

Electric engineering, automation, process control engineering / Low-voltage switch technology / Load breakout, motor breakout / Motor starter combination (ecl@ss8.1-27-37-09-05 [AJZ718010])

Kind of motor starter			Direct starter
With short-circuit release			Yes
Rated control supply voltage Us at AC 50HZ		V	230 - 230
Rated control supply voltage Us at AC 60HZ		V	0 - 0
Rated control supply voltage Us at DC		V	0 - 0
Voltage type for actuating			AC
Rated operation power at AC-3, 230 V, 3-phase		kW	2.2
Rated operation power at AC-3, 400 V		kW	4
Rated power, 460 V, 60 Hz, 3-phase		kW	0
Rated power, 575 V, 60 Hz, 3-phase		kW	0
Rated operation current Ie		A	8.5
Rated operation current at AC-3, 400 V		A	9
Overload release current setting		A	3 - 12
Rated conditional short-circuit current, type 1, 480 Y/277 V		A	0
Rated conditional short-circuit current, type 1, 600 Y/347 V		A	0
Rated conditional short-circuit current, type 2, 230 V		A	0
Rated conditional short-circuit current, type 2, 400 V		A	0
Number of auxiliary contacts as normally open contact			1
Number of auxiliary contacts as normally closed contact			0
Ambient temperature, , upper operating limit		°C	60
Temperature compensated overload protection			Yes
Release class			Adjustable
Type of electrical connection of main circuit			Screw connection
Type of electrical connection for auxiliary- and control current circuit			Screw connection
Rail mounting possible			Yes
Degree of protection (IP)			IP20

Supporting protocol for TCP/IP	No
Supporting protocol for PROFIBUS	No
Supporting protocol for CAN	No
Supporting protocol for INTERBUS	No
Supporting protocol for ASI	No
Supporting protocol for MODBUS	No
Supporting protocol for Data-Highway	No
Supporting protocol for DeviceNet	No
Supporting protocol for SUCONET	No
Supporting protocol for LON	No
Supporting protocol for PROFINET IO	No
Supporting protocol for PROFINET CBA	No
Supporting protocol for SERCOS	No
Supporting protocol for Foundation Fieldbus	No
Supporting protocol for EtherNet/IP	No
Supporting protocol for AS-Interface Safety at Work	No
Supporting protocol for DeviceNet Safety	No
Supporting protocol for INTERBUS-Safety	No
Supporting protocol for PROFIsafe	No
Supporting protocol for SafetyBUS p	No
Supporting protocol for other bus systems	No

Dimensions

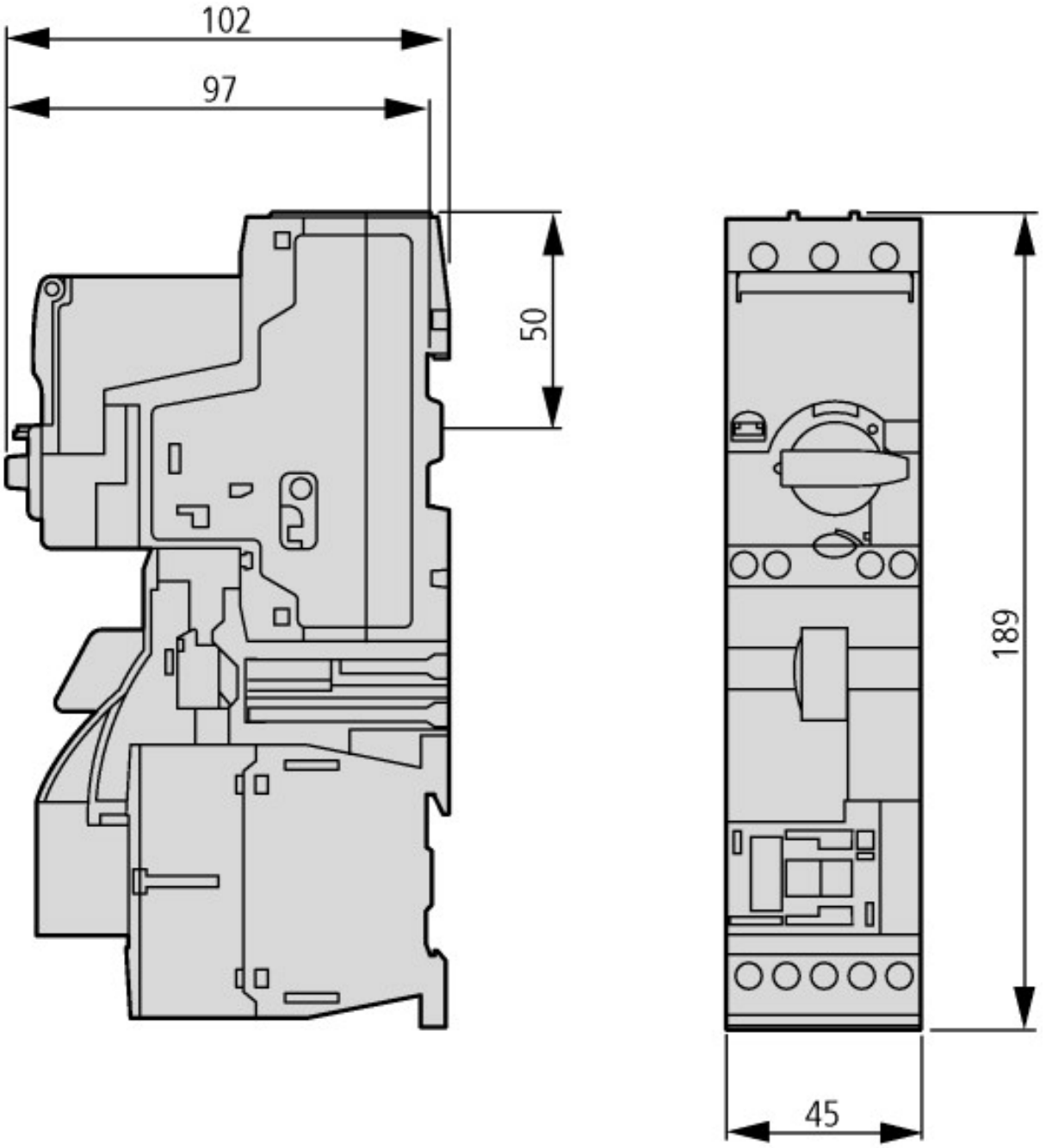

Additional product information (links)

IL034014ZU (IL03402005Z) Direct-on-line starter up to 15 A	
IL034014ZU (IL03402005Z) Direct-on-line starter up to 15 A	ftp://ftp.moeller.net/DOCUMENTATION/AWA_INSTRUCTIONS/IL034014ZU2013_11.pdf
Moeller_Online Selections Aids	http://www.moeller.net/en/support/slider/index.jsp

© 11/2015 by Eaton Industries GmbH