Circuit-breaker, 3p, 20A, plug-in module

Part no. NZMN1-A20-SVE
Article no. 112776

Powering Business Worldwide

Similar to illustration

Delivery programme

Product range			Circuit-breaker
Protective function			System and cable protection
Standard/Approval			IEC
Installation type			Plug-in units
Release system			Thermomagnetic release
Construction size			NZM1
Number of poles			3 pole
Standard equipment			Box terminal
Switching capacity			
400/415 V 50/60 Hz	I_{cu}	kA	50
Rated current = rated uninterrupted current			
Rated current = rated uninterrupted current	$I_n = I_u$	A	20
Setting range			
Overload trip			
	I_r	A	15 - 20
Short-circuit releases			
Non-delayed	$I_i = I_n$ x …		350 A fixed
Short-circuit releases			
min.		A	350

Technical data

General

Standards			IEC/EN 60947
Protection against direct contact			Finger and back of hand proof to VDE 0106 Part 100
Climatic proofing			Damp heat, constant, to IEC 60068-2-78 Damp heat, cyclic, to IEC 60068-2-30
Ambient temperature			
Ambient temperature, storage		°C	- 40 - + 80
Operation		°C	-25 - +70
Mechanical shock resistance (10 ms half-sinusoidal shock) according to IEC 60068-2-27		g	20 (half-sinusoidal shock 20 ms)
Safe isolation to EN 61140			
Between auxiliary contacts and main contacts		V AC	500
between the auxiliary contacts		V AC	300
Mounting position			Vertical and 90° in all directions

			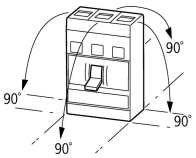 With residual-current release XFI: - NZM1, N1, NZM2, N2: vertical and 90° in all directions with plug-in adapter elements - NZM1, N1, NZM2, N2: vertical, 90° right/left with withdrawable unit: - NZM3, N3: vertical, 90 ° left - NZM4, N4: vertical with remote operator: - NZM2, N(S)2, NZM3, N(S)3, NZM4, N(S)4: vertical and 90° in all directions
Direction of incoming supply			as required
Degree of protection			
Device			In the operating controls area: IP20 (basic degree of protection)
Enclosures			With insulating surround: IP40 With door coupling rotary handle: IP66
Terminations			Tunnel terminal: IP10 Phase isolator and strip terminal: IP00
Other technical data (sheet catalogue)			Weight Temperature dependency, Derating Effective power loss

Circuit-breakers

Rated current = rated uninterrupted current	$I_n = I_u$	A	20
Rated surge voltage invariability	U_{imp}		
Main contacts		V	6000
Auxiliary contacts		V	6000
Rated operational voltage	U_e	V AC	690
			1) Details apply for 3 pole system protection circuit-breaker with thermomagnetic release NZMN(H)1(2)(3)-A... to 500 A. For rated operating voltage switching via 3 contacts: DC correction factor for instantaneous release response value: NZM1: 1.25, NZM2: 1.35, NZM3: 1.45 Set value for I_i at DC = set value I_i AC/correction factor DC **Switching of one pole via two series contacts** 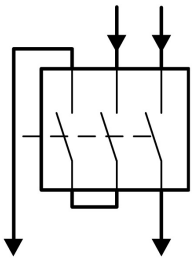 **Switching of one pole via three series contacts** 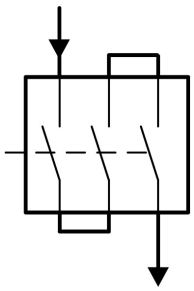
Overvoltage category/pollution degree			III/3
Rated insulation voltage	U_i	V	690
Use in unearthed supply systems		V	690

Switching capacity

Rated short-circuit making capacity	I_{cm}		
240 V	I_{cm}	kA	187
400/415 V	I_{cm}	kA	105
440 V 50/60 Hz	I_{cm}	kA	74
525 V 50/60 Hz	I_{cm}	kA	40
690 V 50/60 H	Ic	kA	17
Rated short-circuit breaking capacity I_{cn}	I_{cn}		
Icu to IEC/EN 60947 test cycle O-t-CO	Icu	kA	
240 V 50/60 Hz	I_{cu}	kA	85
400/415 V 50/60 Hz	I_{cu}	kA	50
440 V 50/60 Hz	I_{cu}	kA	35

525 V 50/60 Hz	I_{cu}	kA	20
690 V 50/60 Hz	I_{cu}	kA	10
Ics to IEC/EN 60947 test cycle O-t-CO-t-CO	Ics	kA	
240 V 50/60 Hz	I_{cs}	kA	85
400/415 V 50/60 Hz	I_{cs}	kA	50
440 V 50/60 Hz	I_{cs}	kA	35
525 V 50/60 Hz	I_{cs}	kA	10
690 V 50/60 Hz	Ics	kA	7.5
			Maximum back-up fuse, if the expected short-circuit currents at the installation location exceed the switching capacity of the circuit-breaker.
Utilization category to IEC/EN 60947-2			A
Rated making and breaking capacity			
Rated operational current	I_e	A	
AC-1			
380 V 400 V	I_e	A	20
415 V	I_e	A	20
690 V	I_e	A	20
AC--3			
380 V 400 V	I_e	A	20
415 V	I_e	A	20
660 V 690 V	I_e	A	20
Lifespan, mechanical(of which max. 50 % trip by shunt/undervoltage release)	Operations		20000
Lifespan, electrical			
AC-1			
400 V 50/60 Hz	Operations		10000
415 V 50/60 Hz	Operations		10000
690 V 50/60 Hz	Operations		7500
AC--3			
400 V 50/60 Hz	Operations		7500
415 V 50/60 Hz	Operations		7500
690 V 50/60 Hz	Operations		5000
Max. operating frequency		Ops/h	120
Current heat losses per pole at I_u are based on the maximum rated operational current of the frame size.		W	16.7
			For current heat loss per pole the specification refers to the maximum rated operational current of the frame size.
Total downtime in a short-circuit		ms	< 10

Terminal capacity

Standard equipment			Box terminal
Overview			Basic equipment Box terminal ● - - - Screw connection - ● ● ● Accessories Box terminal - ● ● - Screw connection ● - - ● Tunnel terminal ● ● ● ● Connection on rear ● ● ● ● Flat conductor terminal - - - ●
Round copper conductor			
Box terminal			
Solid		mm^2	1 x (10 - 16) 2 x (6 - 16)
Stranded		mm^2	1 x (25 - 70) depending on the cable manufacturer up to 95 mm^2 can be connected. 2 x 25

Tunnel terminal			
Solid		mm^2	1 x 16
Stranded		mm^2	
Stranded		mm^2	1 x (25 - 95)
Bolt terminal and rear-side connection			
Direct on the switch			
Solid		mm^2	1 x (10 - 16) 2 x (10 - 16)
Stranded		mm^2	1 x (25 - 35) 2 x (25 - 35)
Al conductors, Cu cable			
Solid		mm^2	1 x 16
Stranded		mm^2	
Stranded		mm^2	1 x (25 - 95)
Cu strip (number of segments x width x segment thickness)			
Box terminal			
	min.	mm	2 x 9 x 0.8
	max.	mm	9 x 9 x 0.8
Copper busbar (width x thickness)	mm		
Bolt terminal and rear-side connection			
Screw connection			M6
Direct on the switch			
	min.	mm	12 x 5
	max.	mm	16 x 5
Control cables			
		mm^2	1 x (0.75 - 2.5) 2 x (0.75 - 1.5)

Design verification as per IEC/EN 61439

Technical data for design verification			
Rated operational current for specified heat dissipation	I_n	A	20
Equipment heat dissipation, current-dependent	P_{vid}	W	9.82
Operating ambient temperature min.		°C	-25
Operating ambient temperature max.		°C	70
IEC/EN 61439 design verification			
10.2 Strength of materials and parts			
10.2.2 Corrosion resistance			Meets the product standard's requirements.
10.2.3.1 Verification of thermal stability of enclosures			Meets the product standard's requirements.
10.2.3.2 Verification of resistance of insulating materials to normal heat			Meets the product standard's requirements.
10.2.3.3 Verification of resistance of insulating materials to abnormal heat and fire due to internal electric effects			Meets the product standard's requirements.
10.2.4 Resistance to ultra-violet (UV) radiation			Meets the product standard's requirements.
10.2.5 Lifting			Does not apply, since the entire switchgear needs to be evaluated.
10.2.6 Mechanical impact			Does not apply, since the entire switchgear needs to be evaluated.
10.2.7 Inscriptions			Meets the product standard's requirements.
10.3 Degree of protection of ASSEMBLIES			Does not apply, since the entire switchgear needs to be evaluated.
10.4 Clearances and creepage distances			Meets the product standard's requirements.
10.5 Protection against electric shock			Does not apply, since the entire switchgear needs to be evaluated.
10.6 Incorporation of switching devices and components			Does not apply, since the entire switchgear needs to be evaluated.
10.7 Internal electrical circuits and connections			Is the panel builder's responsibility.
10.8 Connections for external conductors			Is the panel builder's responsibility.
10.9 Insulation properties			
10.9.2 Power-frequency electric strength			Is the panel builder's responsibility.
10.9.3 Impulse withstand voltage			Is the panel builder's responsibility.
10.9.4 Testing of enclosures made of insulating material			Is the panel builder's responsibility.

10.10 Temperature rise			The panel builder is responsible for the temperature rise calculation. Eaton will provide heat dissipation data for the devices.
10.11 Short-circuit rating			Is the panel builder's responsibility. The specifications for the switchgear must be observed.
10.12 Electromagnetic compatibility			Is the panel builder's responsibility. The specifications for the switchgear must be observed.
10.13 Mechanical function			The device meets the requirements, provided the information in the instruction leaflet (IL) is observed.

Technical data ETIM 6.0

Low-voltage industrial components (EG000017) / Power circuit-breaker for trafo/generator/installation prot. (EC000228)		
Electric engineering, automation, process control engineering / Low-voltage switch technology / Circuit breaker (LV < 1 kV) / Circuit breaker for power transformer, generator and system protection (ecl@ss8.1-27-37-04-09 [AJZ716010])		
Rated permanent current Iu	A	20
Rated voltage	V	690 - 690
Rated short-circuit breaking capacity Icu at 400 V, 50 Hz	kA	50
Overload release current setting	A	15 - 20
Adjustment range short-term delayed short-circuit release	A	0 - 0
Adjustment range undelayed short-circuit release	A	350 - 350
Integrated earth fault protection		No
Type of electrical connection of main circuit		Frame clamp
Device construction		Built-in device plug-in technique
Suitable for DIN rail (top hat rail) mounting		No
DIN rail (top hat rail) mounting optional		Yes
Number of auxiliary contacts as normally closed contact		0
Number of auxiliary contacts as normally open contact		0
Number of auxiliary contacts as change-over contact		0
Switched-off indicator available		No
With under voltage release		No
Number of poles		3
Position of connection for main current circuit		Front side
Type of control element		Rocker lever
Complete device with protection unit		Yes
Motor drive integrated		No
Motor drive optional		No
Degree of protection (IP)		IP20

Characteristics

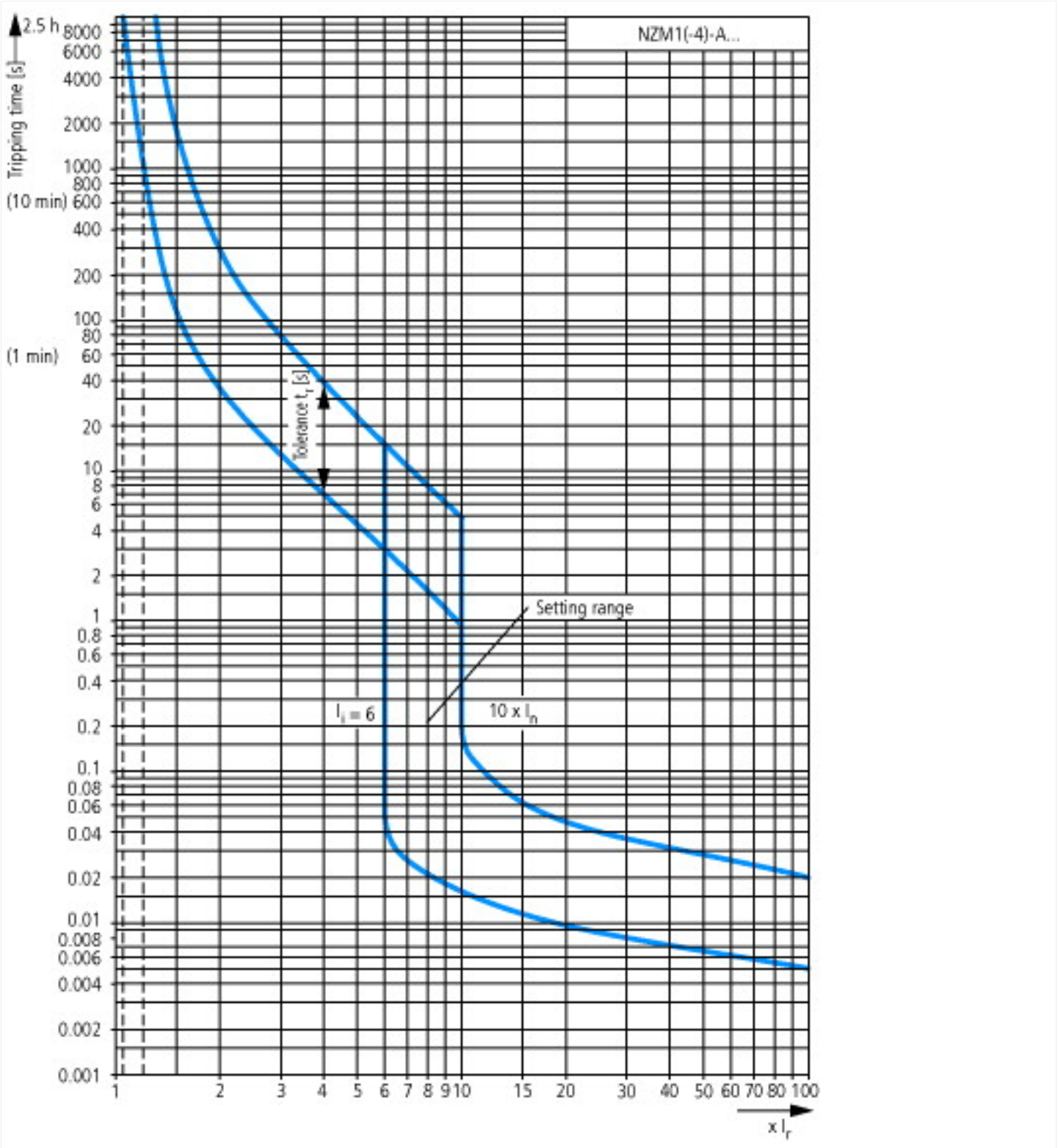

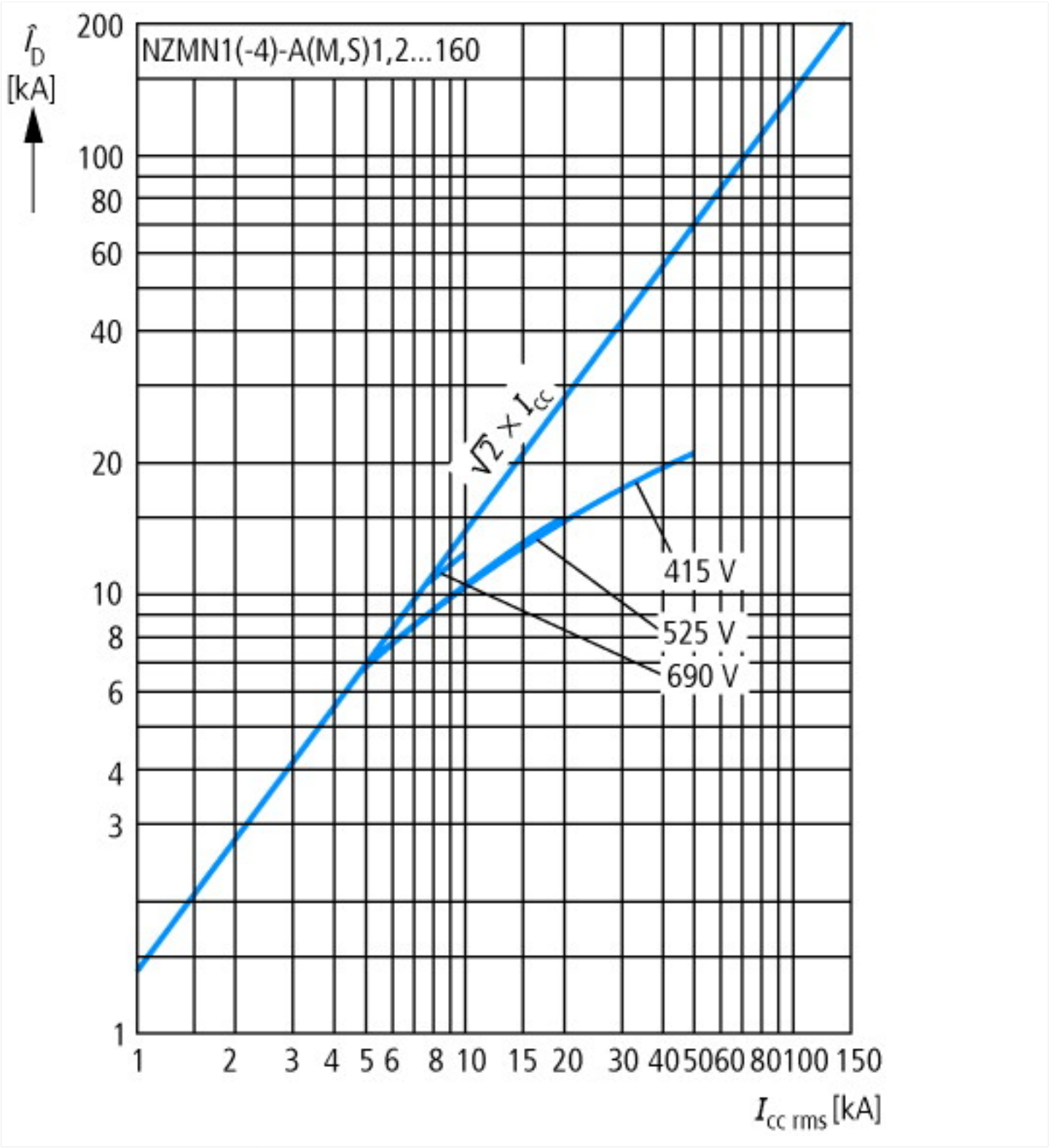
NZMN1(-4)-A(M,S)1,2...160
$\hat{I}_D$ [kA]
200
100
80
60
40
20
10
8
6
4
3
1
$\sqrt{2} \times I_{cc}$
415 V
525 V
690 V
1
2
3
4
5
6
8
10
15
20
30
40
50
60
80
100
150
$I_{cc\ rms}$ [kA]

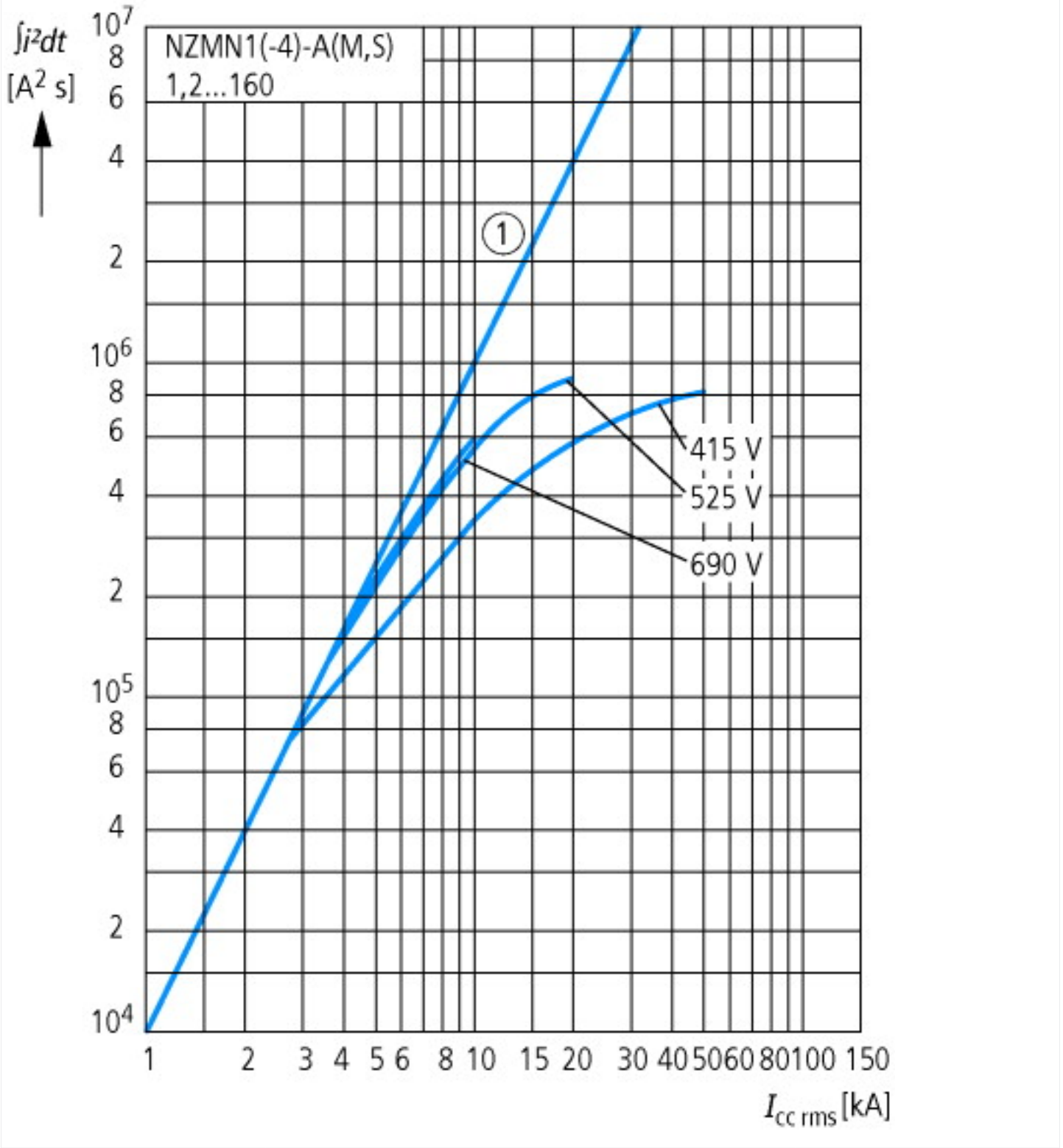
∫i²dt
[A² s]
NZMN1(-4)-A(M,S)
1,2...160
①
415 V
525 V
690 V
$I_{cc\ rms}$ [kA]

Dimensions

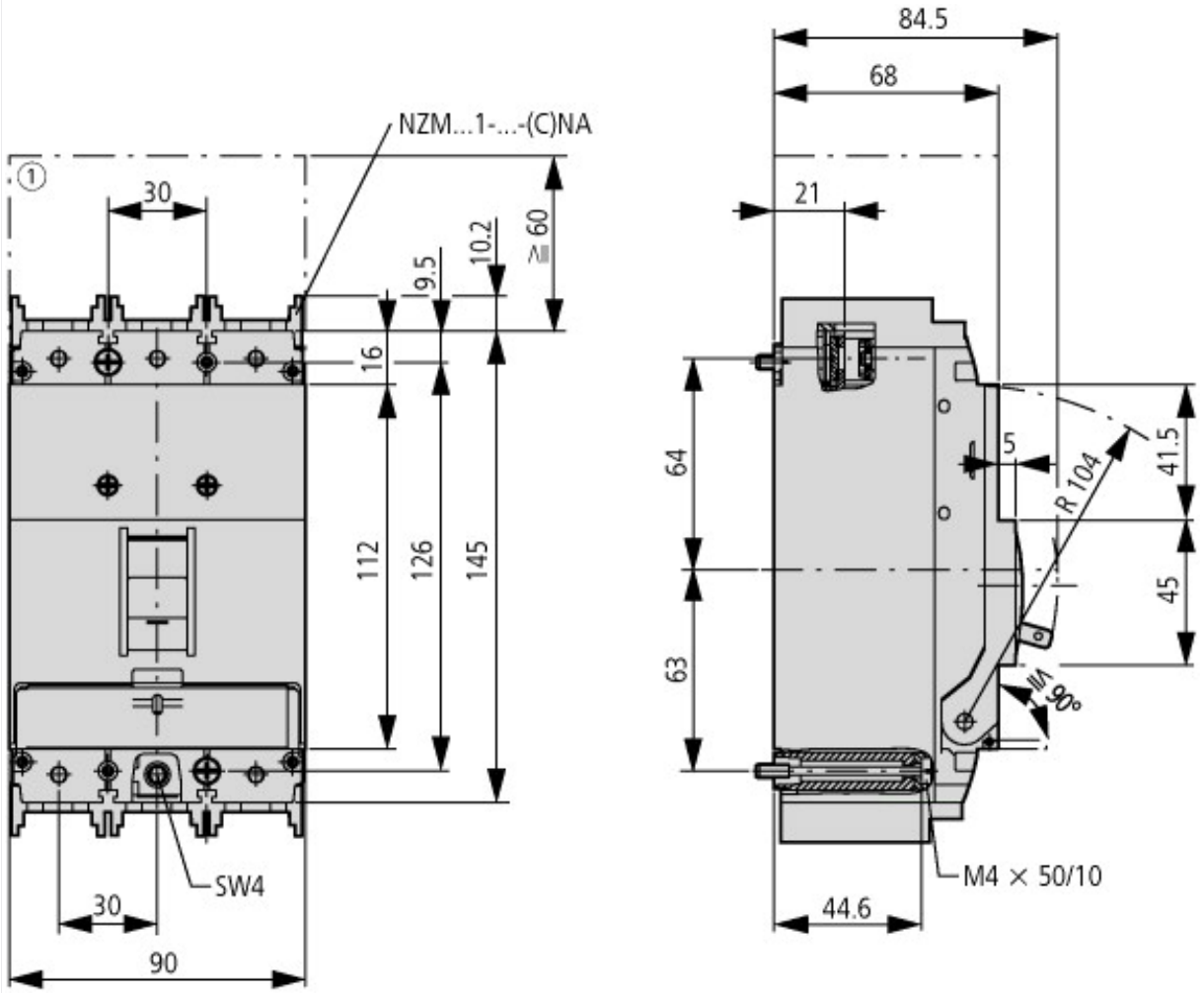

① Blow out area, minimum clearance to adjacent parts

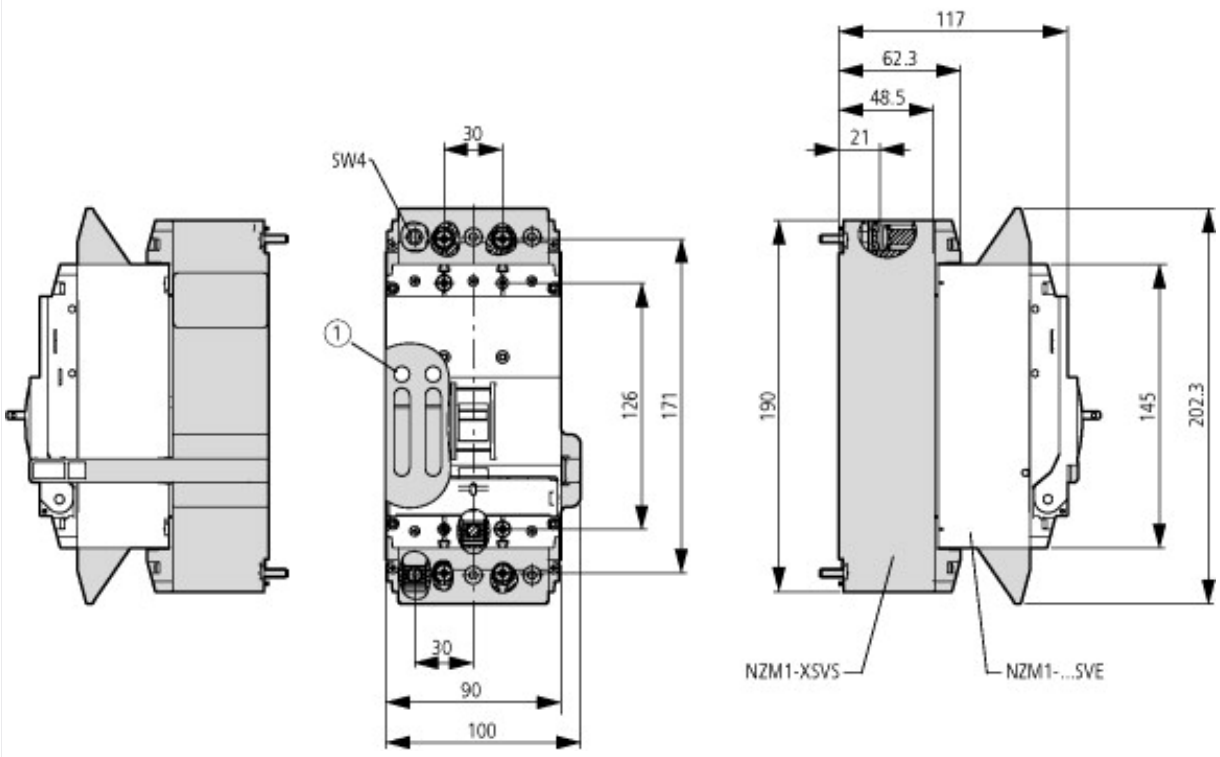

Additional product information (links)

IL01203004Z (AWA1230-1913) Circuit-breaker, Switch-Disconnector	
IL01203004Z (AWA1230-1913) Circuit-breaker, Switch-Disconnector	ftp://ftp.moeller.net/DOCUMENTATION/AWA_INSTRUCTIONS/IL01203004Z2014_07.pdf
IL01219023Z (AWA1230-2052) Plug-in adapter	

IL01219023Z (AWA1230-2052) Plug-in adapter	ftp://ftp.moeller.net/DOCUMENTATION/AWA_INSTRUCTIONS/IL01219023Z2011_02.pdf
Weight	http://ecat.moeller.net/flip-cat/?edition=HPLEN&startpage=17.171
Temperature dependency, Derating	http://ecat.moeller.net/flip-cat/?edition=HPLEN&startpage=17.172
Effective power loss	http://ecat.moeller.net/flip-cat/?edition=HPLEN&startpage=17.174
Setting-Specific Representation of Tripping Characteristics and Competent Assessment of their Interaction	http://www.moeller.net/binary/ver_techpapers/ver943en.pdf
Busbar Component Adapters for modern Industrial control panels	http://www.moeller.net/binary/ver_techpapers/ver960en.pdf

© 11/2015 by Eaton Industries GmbH