Terminal block 1 pole, 125A, 6 output terminals

Part no. BPZ-KB-6/125
Article no. 102714

Powering Business Worldwide

Technical data

General

Standards			IEC 60 947 -7 -1 UL 1059
RoHS (in accordance with Directive 2002/95/EC of the European Parliament and Council)			conform
Heat deflection temperature		?C	100
UL 94 flame classification			V-0
Comparative tracking index		V	600
Degree of Protection			IP20
Assembly details			Clicks on DIN-rail or on base plate. Save time on wiring. Save 80% on space used. Modular construction, 1-4 pole Systems can be built with several blocks.

Electrical

IEC			
Max. electrical load / Cu		A	125
Max. operating voltage / Cu		V AC	1000
Max. operating voltage / Cu		V DC	1500
UL			
Max. electrical load / Cu		A	115
Max. operating voltage / Cu		V AC	600
CSA			
Max. electrical load / Cu		A	115
Max. operating voltage / Cu		V AC	600
Rated peak withstand current	I_{pk}	kA	30
Rated short-time withstand current (t=1s)	I_{cw}	kA	4.2

Material characteristics

Material			
Clamping body			Brass
Housing			PA66
Hexagon socket set screw			Steel
Surface finish			
Clamping body			Plain
Hexagon socket set screw			Zn-Plated
Colour			
Housing			grey, RAL 7035

Terminal capacity

Incomer			
single wire/multi wire		mm^2	10 - 35 6 - 16
single wire/multi wire		AWG	8 - 2 14 - 6
fine wire (with sleeve)		mm^2	10 - 35 6 - 16
fine wire (with sleeve)		AWG	8 - 2 14 - 6
Torque		N/m	3.5 - 5
Torque		lbf	31 - 44
Outgoings			
single wire/multi wire		mm^2	2.5 - 16
single wire/multi wire		AWG	14 - 6
fine wire (with sleeve)		mm^2	2.5 - 16

fine wire (with sleeve)		AWG	14 - 6
Torque		N/m	2 - 3
Torque		lbf	17.7 - 26.5

Technical data ETIM 6.0

Energy distribution systems (EG000015) / Distributor assembly terminal blocks (EC001894)			
Electric engineering, automation, process control engineering / Electrical insulation and connecting material / Energy distribution system / Distributor assembly terminal blocks (ecl@ss8.1-27-40-06-09 [ACO381008])			
Height		mm	73.8
Width		mm	27
Depth		mm	46.3
Max. rated current		A	125
Number of poles			1
Conductor cross section flexible (fine-strand) with cable end sleeve		mm^2	2.5 - 35
Conductor cross section solid (solid, stranded)		mm^2	2.5 - 35
Number of clamp positions per pole			7
With PE-rail			No
With N-rail			No

Dimensions

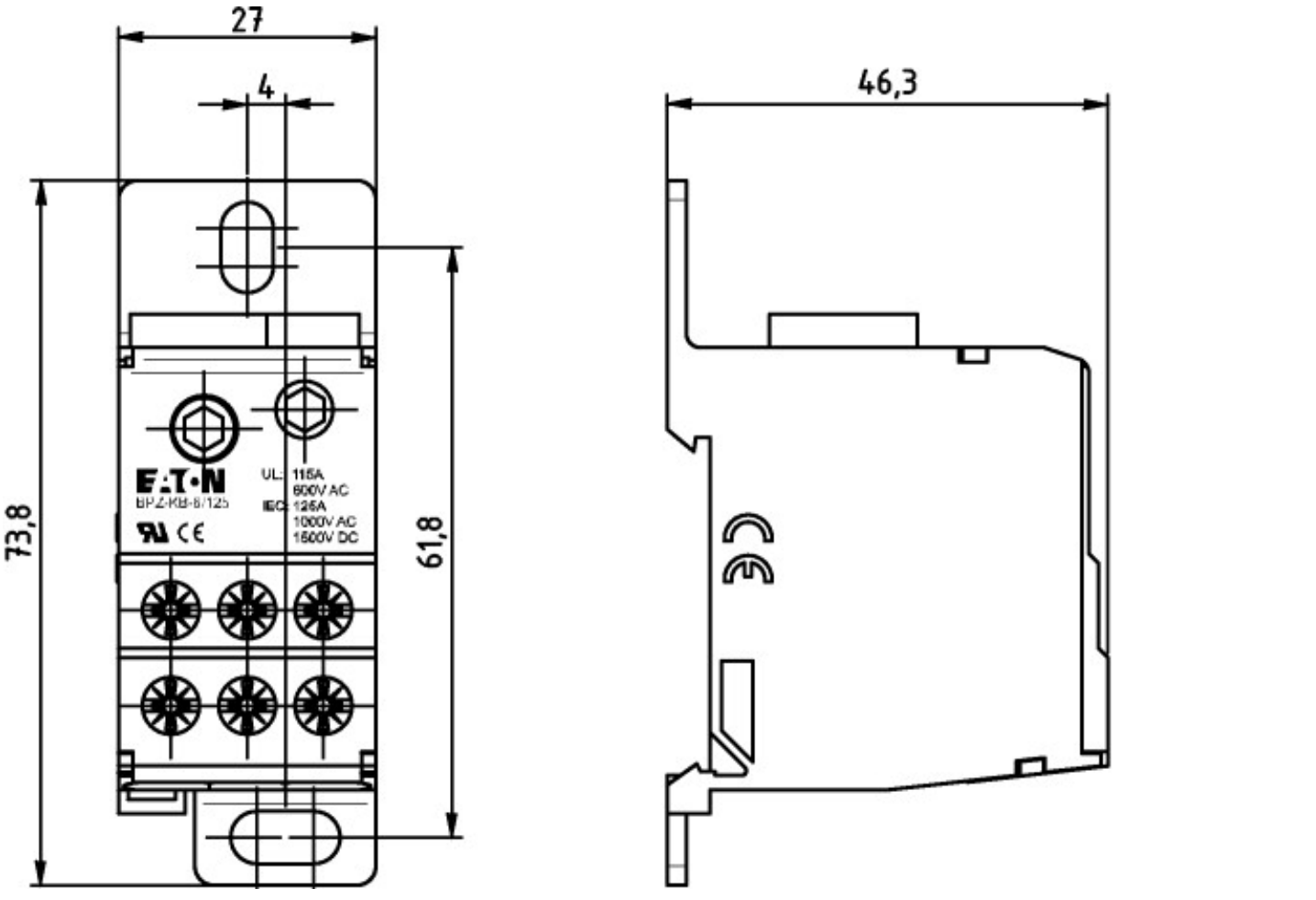

© 12/2015 by Eaton Industries GmbH