At the end of this document you will find links to products related to this catalog. You can go directly to our shop by clicking HERE. HERE

Photoelectrics
Level Sensors
Types VP, Modulated

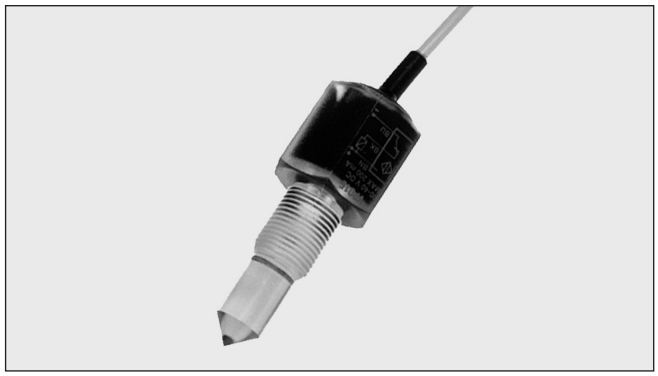

- **Sensor for liquid level detection**
- **Built-in amplifier, Ga-As diode**
- **Output: Transistor NPN/PNP, NO or NC switching**
- **High chemical resistance to most acids and bases**
- **VP01/03: Output OFF when sensor in liquid**
- **VP02/04: Output ON when sensor in liquid**
- **No electrical or thermal connection between liquid and electrical circuit**
- **LED-indication for output ON**
- **Power supply 10 to 40 VDC**

CE

Product Description

Optical level sensor with modulated, infrared light for the detection of liquids. Fitted with built-in amplifier. Transmitter and receiver are completely selfcontained in solid plastic designed for mounting into container wall. VP01/02 are available in a Polysulfone housing resistant to most acids and bases. VP03/04EM are available in a Polyamide 12 housing resistant to various solvents.

Ordering Key

VP 0 2 E P M

- **Type**
- **Housing**
- **Output status**
- **Output type**
- **PNP output**
- **Modulated**

Type Selection

Housing material	Connection	Ordering no. Transistor NPN Make switching	Ordering no. Transistor NPN Break switching	Ordering no. Transistor PNP Make switching	Ordering no. Transistor PNP Break switching
Polysulphone	Cable	**VP 02 EM**	**VP 01 EM**	**VP 02 EPM**	**VP 01 EPM**
Polyamide 12	Cable	**VP 04 EM**	**VP 03 EM**	**VP 04 EPM**	**VP 03 EPM**

Specifications

Rated operational voltage	10 - 40 VDC
Rated operational current	
Continuous	200 mA
Voltage drop	≤ 1.0 VDC
No-load supply current	≤ 7 mA
Sensing accuracy	
Liquid level difference	Horizontal mounting: ± 5 mm Vertical mounting: ± 2.5 mm
Ambient light	0 - 50.000 lux
Frequency of operating cycles (f)	30 Hz
Environment	
Degree of protection	IP 67
Operating temperature	-20° to +80°C (-4° to +176°F)
Storage temperature	-40° to +100°C (-40° to +100°F)
Indication for output status	LED, yellow

Housing material	
VP01/02	Polysulphone
VP03/04	Polyamide 12
Tip material	
VP01/02	Polysulphone
VP03/04	Polyamide 12
Weight	90 g
Connection	
Cable	PVC, 2 m Ø4.1 mm, 3 x 0,25 mm^2
Pressure	
VP0x	10 bar at + 60°C
Pipe thread	3/8" PT
CE marking	Yes

Dimensions

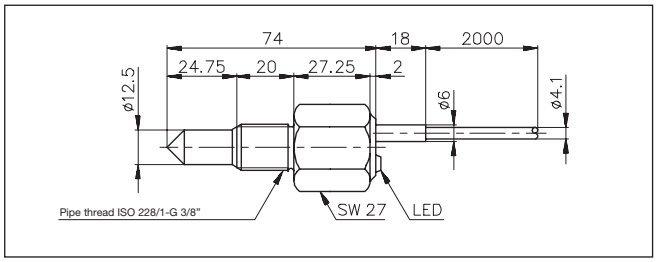

Wiring Diagrams

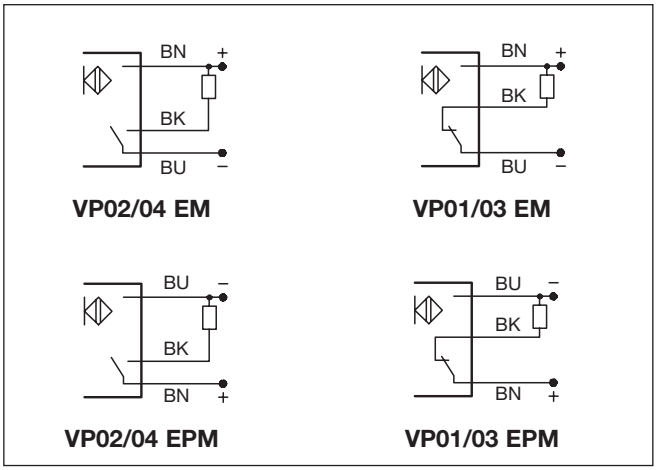

Mode of Operation

The sensor contains IR transmitter, receiver and amplifier with transistor output. The light source is a Ga-As diode emitting infrared light in short pulses.
The conical tip of the sensor forms an angle of 90ºC. This angle acts as a prism, i.e. the beam, emitted from the Ga-As diode placed in one side of the sensor head, is reflected internally to the phototransistor placed in the other side of the sensor head, provided that the tip of the sensor is situated in free air. If the sensor tip is immersed in a liquid, always having a refractive index different from air, the beam will not be refracted by the prism and the photo transistor will not receive any signal.
The sensor types can operate in oil, waste water, aqueous solutions such as beer, wine, alcohol etc. without any kind of accessory.

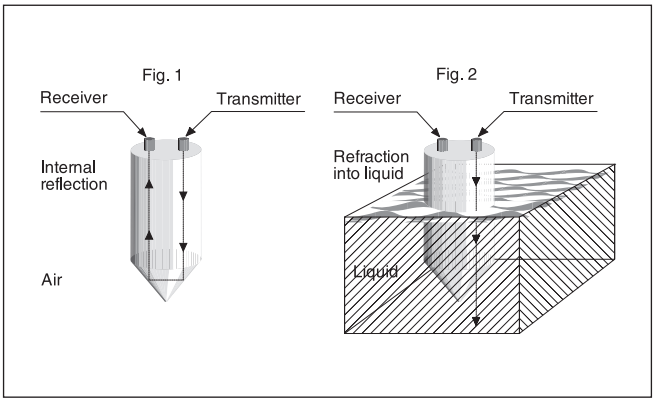

Installation Hints

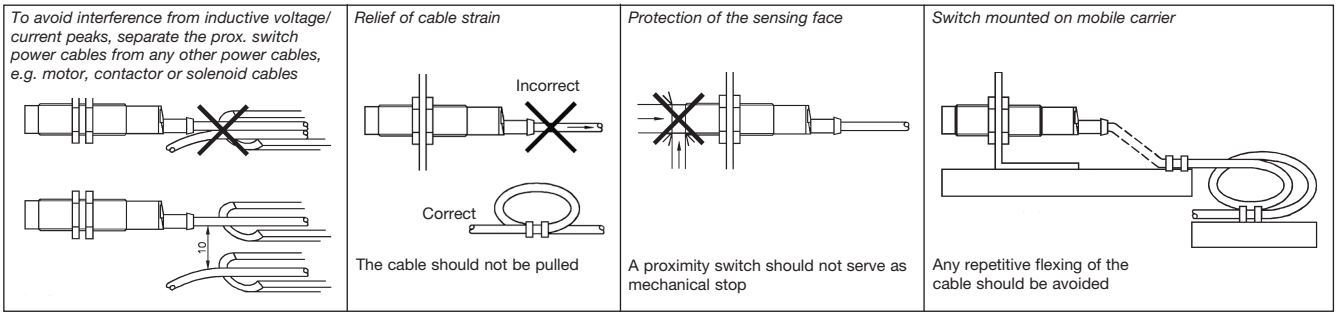

Automatización Eléctrica
Especialistas en Automatización

Below is a list of articles with direct links to our shop Electric Automation Network where you can see:

- Quote per purchase volume in real time.
- Online documentation and datasheets of all products.
- Estimated delivery time enquiry in real time.
- Logistics systems for the shipment of materials almost anywhere in the world.
- Purchasing management, order record and tracking of shipments.

To access the product, click on the green button.

Product	Code	Reference	Product link
Selected parameters SYSTEM Level HOUSING 3/8" pipe tread SENSING RANGE Contact CONNECTION Cable OUTPUT DC PNP MATERIAL Plastic Others SENSING RANGE Direct detection HOUSING 3/8" x 74 mm MATERIAL Polyamide 12	VP03EPM		Buy on EAN