At the end of this document you will find links to products related to this catalog. You can go directly to our shop by clicking HERE. HERE

Modular Switching Power Supply
Type SPM 1
DIN rail mounting

CARLO GAVAZZI

- Single DIN module
- Universal input 90/264VAC – 120/370VDC
- High efficiency up to 80%
- Short circuit protection
- Overload protection
- Internal input filter
- LOW voltage LED indicator
- UL Class 2 Output

Product Description

SPM Modular switching power supplies are specifically designed in order to satisfy both the Automation and the Building automation application requirements. The single DIN module PS is capable of up to 10W of output power. Its high efficiency prevents excess of heat in the installation place.

Ordering Key

SPM 1 - 24 1

- Series
- Number of DIN modules
- Output Voltage
- Phases (only single phase)

Approvals

LISTED
Class 2

Output performances

Model	Input Voltage	Output Power	Output Voltage	Current	Typical Efficiency
SPM1-051	90~264Vac	7.5W	5Vdc	1.50A	74%
SPM1-121	90~264Vac	10W	12Vdc	0.83A	78%
SPM1-151	90~264Vac	10W	15Vdc	0.67A	78%
SPM1-241	90~264Vac	10W	24Vdc	0.42A	80%

Output data

Line regulation		1% max.
Load regulation		1%
Output Voltage accuracy		±1%
Ripple and Noise		50mV
Temperature Coefficient		±0.02%/°C (±0.0112%/°F)
Hold up time	**Vi = 115Vac**	5V and 12V: 10ms 15V and 24V: 60ms
	Vi = 230Vac	30ms
Minimum load		0%
Transient recovery time (50% load step changed)		1ms

DC ON indicator	**Min.**	**Max.**
5V	3Vdc	-
12V	9Vdc	-
15V	11Vdc	-
24V	20Vdc	-
DC LOW indicator	**Min.**	**Max.**
5V	3.2Vdc	3.7Vdc
12V	8.8Vdc	9.3Vdc
15V	12Vdc	12.5Vdc
24V	21.5Vdc	22Vdc

CARLO GAVAZZI

Input data

Rated input voltage	100/240VAC
Voltage range	
AC in	90 - 264 Vac
DC in	120 - 370 Vdc
Line frequency	47 - 63Hz
Inrush current	
Vi= 115Vac	Typ: 10A Max: 15A
Vi= 230Vac	Typ: 20A Max: 30A

* Not replaceable by user

Controls and Protections

Input Fuse	T1A/250Vac internal*
Output Short Circuit	Fold forward
Rated Overload Protection	110-160%

General data (@ nominal line, full load, 25°C)

Insulation voltage	3.000Vac
Insulation resistance	100MΩ
Ambient temperature	-25°C to +71°C (-13°F to 159.8°F)
Derating (>61°C to +71°C)	2.5%/°C (1.4%°F)
Ambient humidity	90%RH
Storage temperature	-25°C to +85°C (-13°F to 185°F)
Dimensions L x W x D mm	91 x 18 x 55.5
L x W x D inches	3.582 x 0.709 x 2.185

Cooling	Free air convection
Case material	Plastic (PC-UL94-V0)
Weight	60g
Protection degree	IP20

Approvals

UL / cUL	file: E258355 file: E258395 file: E258396	UL508 listed, UL1310 Class 2 power supply, UL60950-1 Recognized
TUV		EN60950-1

CE	EN61000-6-3, EN55022 class B, EN61000-3-2, EN61000-3-3, EN61000-6-2, EN55024, EN61000-4-2, EN61000-4-3, EN61000-4-4, EN61000-4-5, EN61000-4-6, EN61000-4-8, EN61000-4-11

Block diagrams

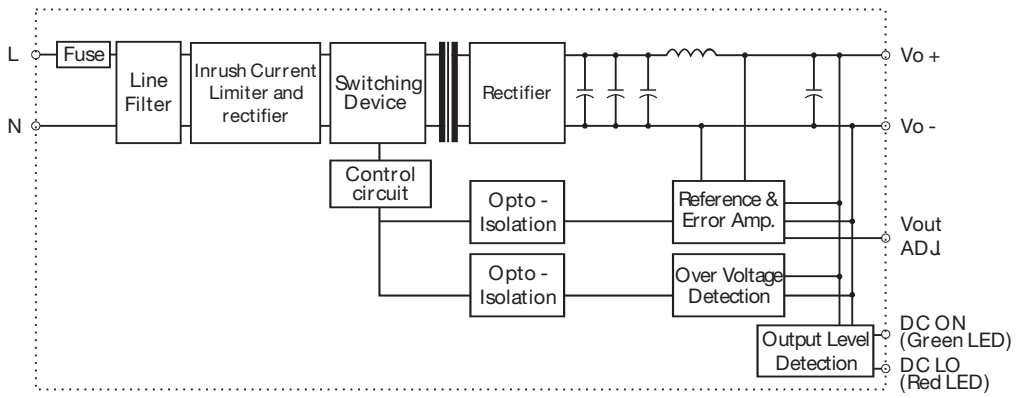

Specifications are subject to change without notice. Pictures are just an example. For special features and/or customization, please ask to our sales network

Pin assignement and front controls

Pin No.	Designation	Description
1	+	Positive output terminal
2	-	Negative output terminal
3	L	Input terminal (phase conductor, no polarity @ DC input)
4	N	Input terminal (neutral conductor, no polarity @ DC input)
LED1	DC ON	Operation indicator LED
LED2	DC LOW	DC LOW indicator LED

Installation

VENTILATION / COOLING:
- **Normal air convection**
- **25mm of free space along all sides to allow good cooling**

CONNECTOR SIZE RANGE:
- **Solid: 0.2-2.0,mm² (AWG24-14) (user copper conductors only)**

Construction

Easy snap-on mounting onto the DIN-Rail (TS35/7.5 or TS35/15), unit sits safety and firmly on the rail; no tools required even to remove.

Derating Diagram

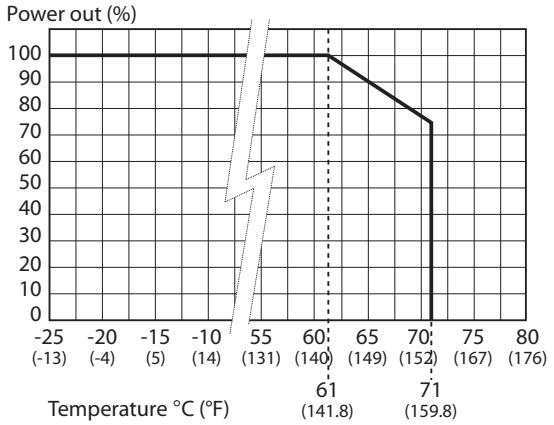

Mechanical Drawings (mm)

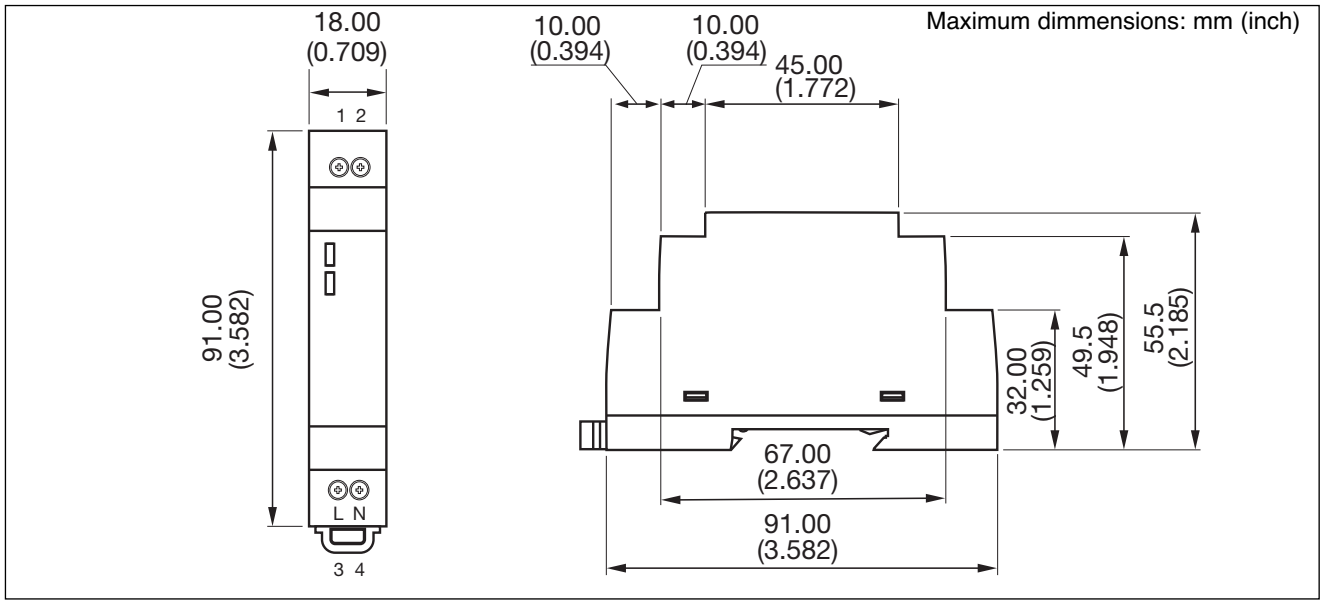

Below is a list of articles with direct links to our shop Electric Automation Network where you can see:

- Quote per purchase volume in real time.
- Online documentation and datasheets of all products.
- Estimated delivery time enquiry in real time.
- Logistics systems for the shipment of materials almost anywhere in the world.
- Purchasing management, order record and tracking of shipments.

To access the product, click on the green button.

Product	Code	Reference	Product link
Selected parameters MODEL DIN low profile AC INPUT VOLTAGE 90 - 264V OUTPUT POWER 10W PARALLEL CONNECTION no INPUT TYPE Single phase or DC OUTPUT VOLTAGE 15Vdc PFC no DC INPUT VOLTAGE 120 - 370V TERMINAL TYPE Screw terminal OUTPUT RDY no Others DESCRIPTION 1DIN module 7,5W,	SPM1151		Buy on EAN