At the end of this document you will find links to products related to this catalog. You can go directly to our shop by clicking HERE. HERE

Safety Magnetic Sensors
Cylindrical Safety Magnetic Sensors
Type SMSA2P10

- **Suitable for applications in safety category 3 in accordance with EN ISO13849-1:2008 when connected to appropriate safety devices**
- **1 NO output**
- **Cable output connection**
- **Cylindrical housing**
- **Multiple flux coding**

Product Description

The SMSA2P10 is designed in conformity with EN 292-1, EN 292-2, EN 60204-1 and EN 1088. It is characterized by multiple flux coding and is suited for applications up safety Category 3 in accordance with EN ISO13849-1:2008 when connected to appropriate safety devices.

Ordering Key

SMS A2 P 10

- **Safety magnetic sensor**
- **Diameter**
- **Case material**
- **Contact type**

Type Selection

Output	Operating distance	Safety category	Item code
1 NO	16 mm	3	**SMS A2 P 10**

Output Specifications

Output	Category 3 (EN ISO13849-1:2008) 1 NO
Output connection	Cable (PVC, AWG 22, L = 2 m, 2 x 0.35 mm^2)
Contact ratings	
Max Switching Voltage	100 VAC
Max Switching Current	0.25 A
Max Switching Power	5 VA

General Specifications

Operating distance ON	16 ± 5 mm
Release distance OFF	20 ± 6 mm
Reset distance	20 ± 6 mm
Suitable magnetic unit	CLSA2
Misalignment	max ± 2 mm
Housing	
Dimensions	M18x1
Material	PBT + 30% glass
Weight	Approx. 70 g
Environment	
Degree of protection	IP 67
Operating temperature	-25 ÷ +70 °C
Storage temperature	-25 ÷ +70 °C
CE-marking	Yes

Application

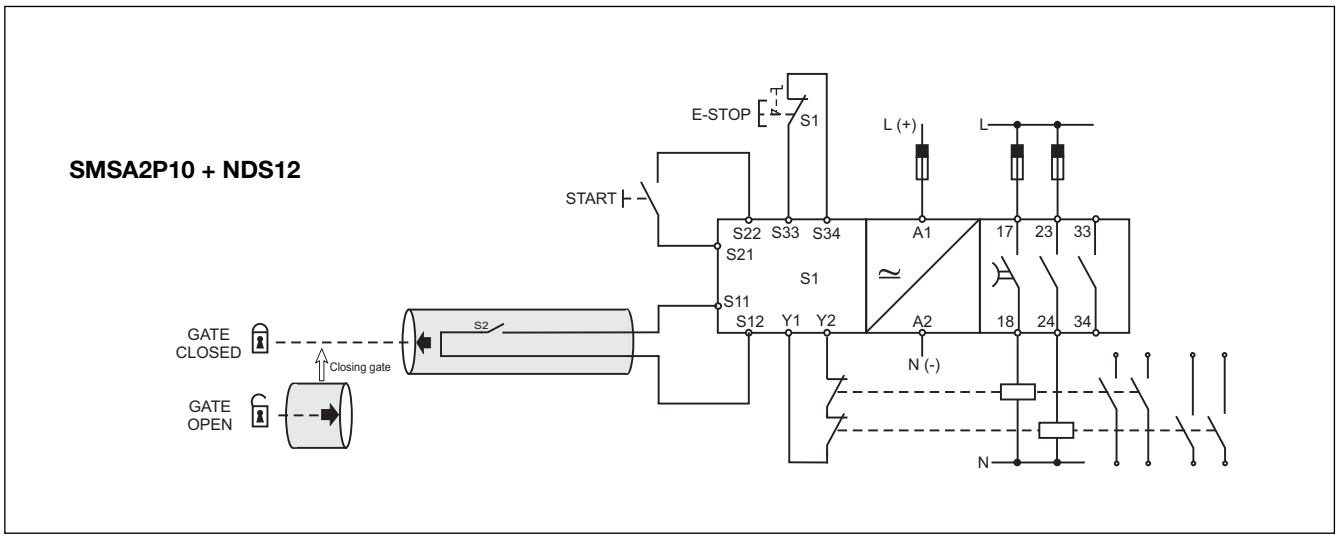

Operating Directions

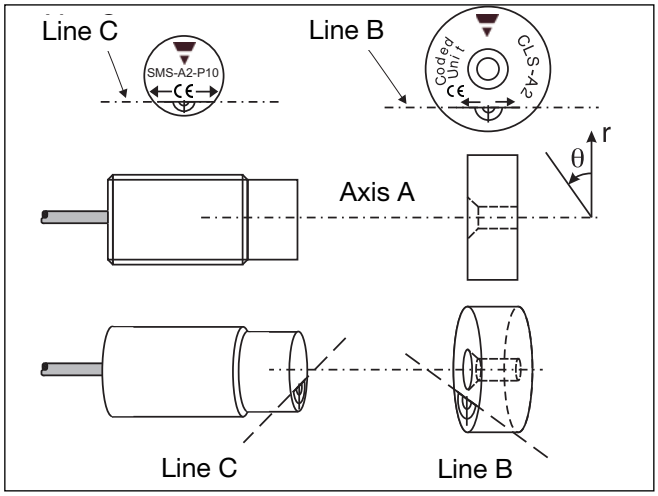

Wiring Diagrams

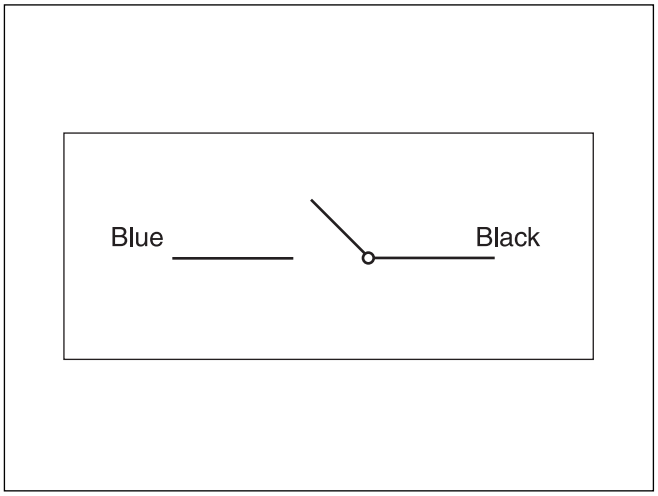

Dimensions

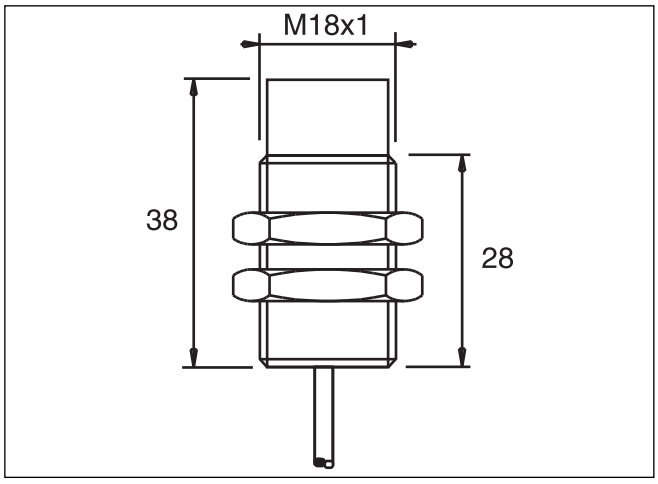

Specifications are subject to change without notice (10.07.13)

Below is a list of articles with direct links to our shop Electric Automation Network where you can see:

- Quote per purchase volume in real time.
- Online documentation and datasheets of all products.
- Estimated delivery time enquiry in real time.
- Logistics systems for the shipment of materials almost anywhere in the world.
- Purchasing management, order record and tracking of shipments.

To access the product, click on the green button.

Product	Code	Reference	Product link
Selected parameters SYSTEM Safety HOUSING M18 OUTPUT 1 Normally Open MATERIAL Plastic SENSING RANGE >10 to 20 mm Others HOUSING M18, Safety Cat. 3 CONTACT RATINGS 100VAC, 0.25A, 5VA SWITCHING DISTANCE 16 mm	SMSA2P10		Buy on EAN