At the end of this document you will find links to products related to this catalog. You can go directly to our shop by clicking HERE. HERE

Proximity Inductive Sensors
Extended Range, Nickel-Plated Brass Housing
Types ICB, M12

CARLO GAVAZZI

- **Sensing distance: 4 to 8 mm**
- **Flush or non-flush types**
- **Short or long body versions**
- **Rated operational voltage (U_b): 10 - 36 VDC**
- **Output: DC 200 mA, NPN or PNP**
- **Normally open or Normally closed**
- **LED indication for output ON**
- **Protection: reverse polarity, short circuit, transients**
- **Cable or M12 plug versions**
- **According to IEC 60947-5-2**
- **Laser engraved on front cap, permanently legible**

CE c UL US LISTED

Product Description

A family of inductive proximity switches in industrial standard nickel-plated brass housings. They are able to handle applications where high sensing range is requested.

Output is open collector NPN or PNP transistors.

Ordering Key

ICB12S30F04NOM1

- **Type**
- **Housing style**
- **Housing material**
- **Housing size**
- **Housing length**
- **Thread length**
- **Detection principle**
- **Sensing distance**
- **Output type**
- **Output configuration**
- **Connection**

Type Selection

Connection	Body style	Rated operating distance S_n	Ordering no. NPN, Normally open	Ordering no. PNP, Normally open	Ordering no. NPN, Normally closed	Ordering no. PNP, Normally closed
Cable	Short	4 mm [1]	**ICB12S30F04NO**	**ICB12S30F04PO**	**ICB12S30F04NC**	**ICB12S30F04PC**
Cable	Short	8 mm [2]	**ICB12S30N08NO**	**ICB12S30N08PO**	**ICB12S30N08NC**	**ICB12S30N08PC**
Plug	Short	4 mm [1]	**ICB12S30F04NOM1**	**ICB12S30F04POM1**	**ICB12S30F04NCM1**	**ICB12S30F04PCM1**
Plug	Short	8 mm [2]	**ICB12S30N08NOM1**	**ICB12S30N08POM1**	**ICB12S30N08NCM1**	**ICB12S30N08PCM1**
Cable	Long	4 mm [1]	**ICB12L50F04NO**	**ICB12L50F04PO**	**ICB12L50F04NC**	**ICB12L50F04PC**
Cable	Long	8 mm [2]	**ICB12L50N08NO**	**ICB12L50N08PO**	**ICB12L50N08NC**	**ICB12L50N08PC**
Plug	Long	4 mm [1]	**ICB12L50F04NOM1**	**ICB12L50F04POM1**	**ICB12L50F04NCM1**	**ICB12L50F04PCM1**
Plug	Long	8 mm [2]	**ICB12L50N08NOM1**	**ICB12L50N08POM1**	**ICB12L50N08NCM1**	**ICB12L50N08PCM1**

[1] For flush mounting in metal

[2] For non-flush mounting in metal

Specifications

Rated operational voltage (U_b)	10 to 36 VDC (ripple incl.)
Ripple	≤ 10%
Output current (I_e)	≤ 200 mA @ 50°C (≤ 150 mA @ 50-70°C)
OFF-state current (I_r)	≤ 50 µA
No load supply current (I_o)	≤ 15 mA
Voltage drop (U_d)	Max. 2.5 VDC @ 200 mA
Protection	Reverse polarity, short-circuit, transients
Voltage transient	1 kV/0.5 J
Power ON delay (t_v)	300 ms
Operating frequency (f)	≤ 2000 Hz
Indication for output ON NO version NC version	Activated LED, yellow Target present Target not present
Indication for short circuit/ overload	LED blinking (f = 2 Hz)
Assured operating sensing distance (S_a)	$0 \le S_a \le 0.81 \times S_n$
Effective operating distance (S_r)	$0.9 \times S_n \le S_r \le 1.1 \times S_n$
Usable operating distance (S_u)	$0.9 \times S_r \le S_u \le 1.1 \times S_r$
Repeat accuracy (R)	≤ 10%
Differential travel (H) (Hysteresis)	1 to 20% of sensing dist.
Ambient temperature Operating Storage	 -25° to +70°C (-13° to +158°F) -30° to +80°C (-22° to +176°F)
Shock and vibration	IEC 60947-5-2/7.4

Specifications (cont.)

Housing material	
Body	Nickel-plated brass
Front	Grey thermoplastic polyester
Connection	
Cable	Ø4.1 x 2 m, 3 x 0.25 mm², grey PVC, oil proof
Plug	M12 x 1
Degree of protection	IP 67
Weight (cable/nuts included)	
Cable	Max. 120 g
Plug	Max. 30 g
Dimensions	See diagrams below

Tightening torque	10 Nm
Approvals	cULus (UL508) CCC is not required for products with a maximum operating voltage of ≤ 36 V
EMC protection	According to IEC 60947-5-2
IEC 61000-4-2 (ESD)	8 KV air discharge, 4 KV contact discharge
IEC 61000-4-3	3 V/m
IEC 61000-4-4	2 kV
IEC 61000-4-6	3 V
IEC 61000-4-8	30 A/m

Dimensions (mm)

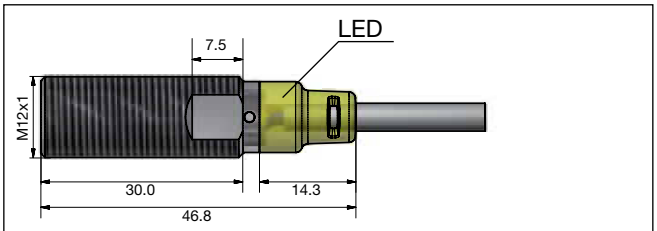

Short body, flush version, cable

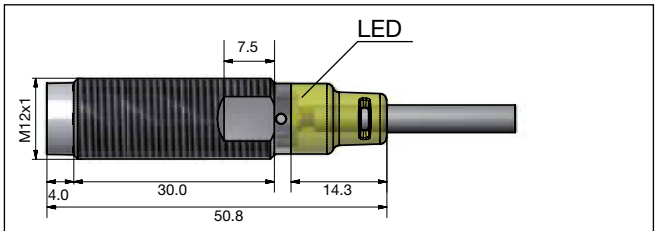

Short body, non-flush version, cable

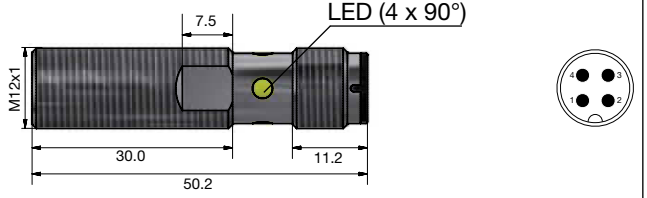

Short body, flush version, plug

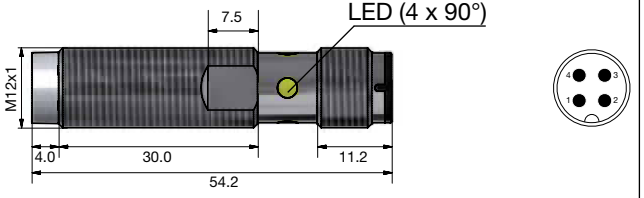

Short body, non-flush version, plug

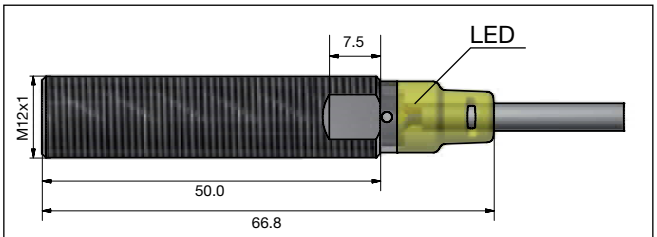

Long body, flush version, cable

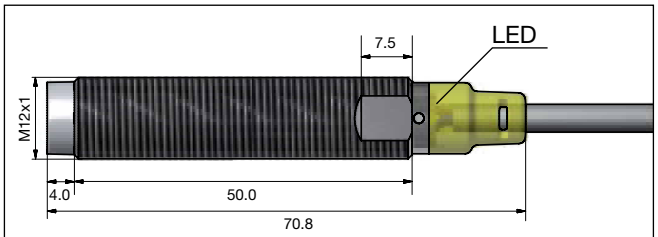

Long body, non-flush version, cable

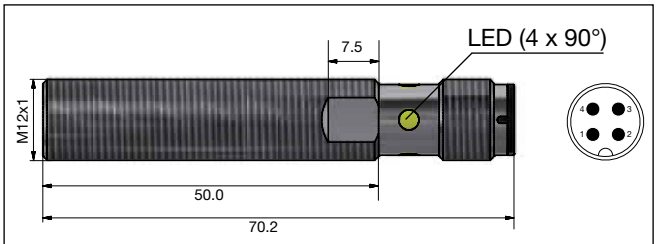

Long body, flush version, plug

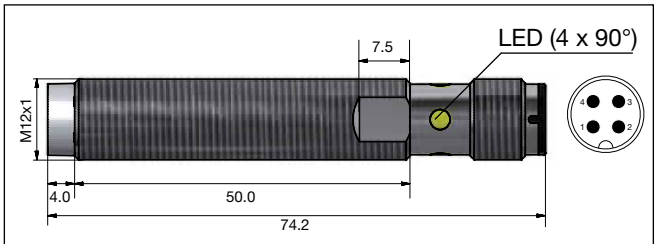

Long body, non-flush version, plug

CARLO GAVAZZI

Installation

Flush sensor, when installed in damping material, must be according to Picture 1A.

Picture 1A

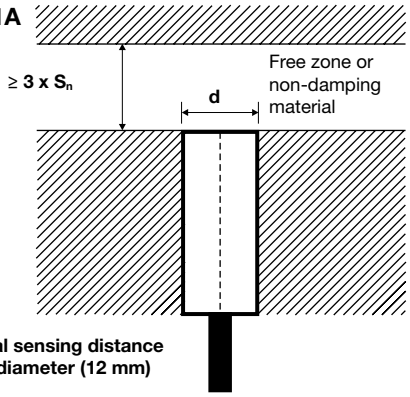

Sn : nominal sensing distance
d : sensor diameter (12 mm)

Non-flush sensor, when installed in damping material, must be according to Picture 1B.

Picture 1B

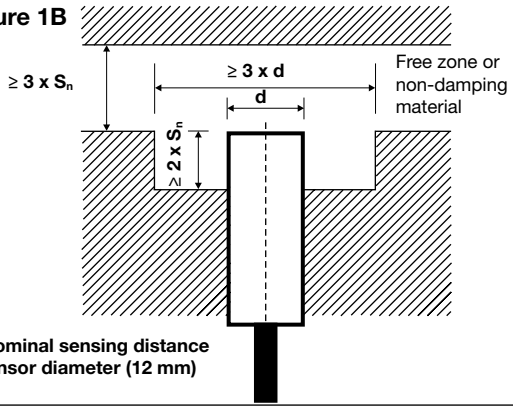

Sn : nominal sensing distance
d : sensor diameter (12 mm)

Flush sensors, when installed together in damping material, must be according to Picture 2A.

Picture 2A

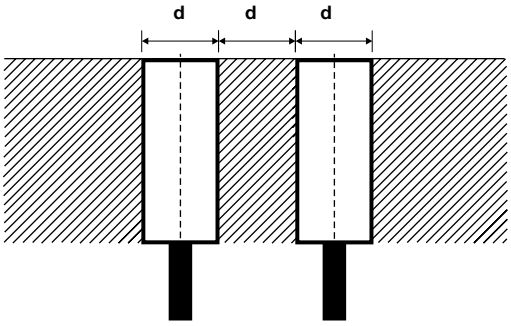

d : sensor diameter (12 mm)

Non-flush sensors, when installed together in damping material, must be according to Picture 2B.

Picture 2B

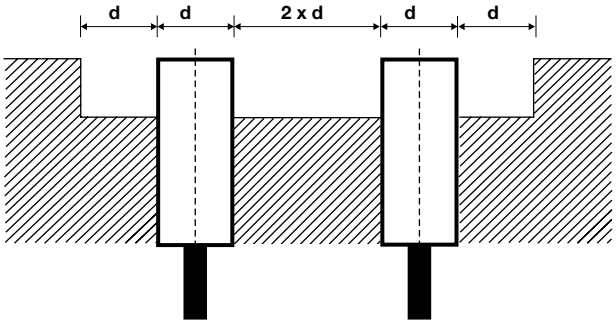

d : sensor diameter (12 mm)

For sensors installed opposite each other, a minimum space of 6 x S_n (the nominal sensing distance) must be observed (See Picture 3).

Picture 3

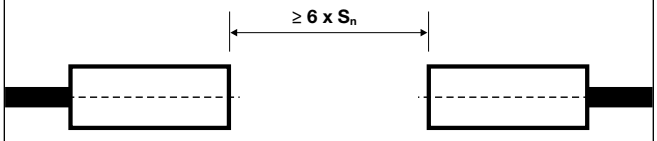

Sn : nominal sensing distance

Wiring Diagram

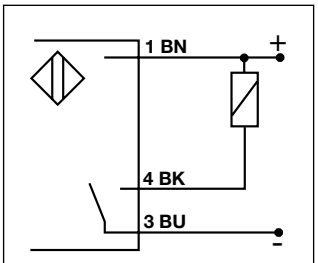

NPN - Normally open

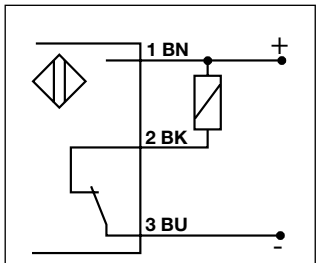

NPN - Normally closed

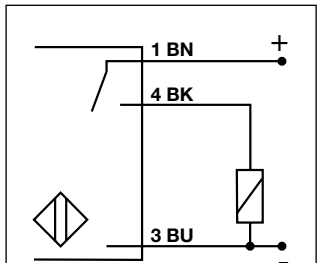

PNP - Normally open

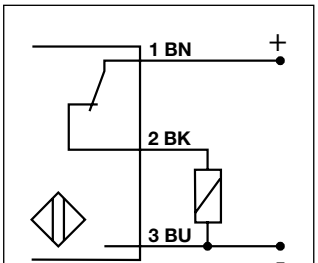

PNP - Normally closed

Reduction Factors

The rated operating distance is reduced by the use of metals and alloys other than Fe360.

The most important reduction factors for inductive proximity sensors are shown in Picture 4.

Picture 4

Fe360 : Steel
CrNi : Chrome-nickel
CuZn : Brass
Al : Aluminium
Cu : Copper
Sr : Effective operating distance

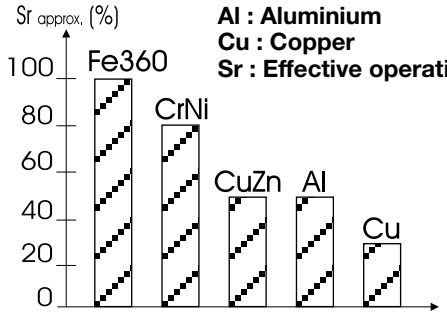

Accessories for Plug Versions

3-wire angled connector, 2 m cable	**CONM13NF-A2**
3-wire angled connector, 5 m cable	**CONM13NF-A5**
3-wire angled connector, 10 m cable	**CONM13NF-A10**
3-wire straight connector, 2m cable	**CONM13NF-S2**
3-wire straight connector, 5m cable	**CONM13NF-S5**

For any additional information or different options, please refer to the "General Accessories" datasheets.

Delivery Contents

- Inductive proximity switch ICB.
- 2 nuts NPB
- Packaging: plastic bag

Automatización Eléctrica
Especialistas en Automatización

Below is a list of articles with direct links to our shop Electric Automation Network where you can see:

- Quote per purchase volume in real time.
- Online documentation and datasheets of all products.
- Estimated delivery time enquiry in real time.
- Logistics systems for the shipment of materials almost anywhere in the world.
- Purchasing management, order record and tracking of shipments.

To access the product, click on the green button.

Product	Code	Reference	Product link
Selected parameters OUTPUT FUNCTION NC MOUNTING Non Flush HOUSING M12 SENSING RANGE >6 to 8 mm OUTPUT DC NPN CONNECTION Plug WIRE 3-wire MATERIAL Metal SYSTEM Proximity Sensor Others HOUSING M12 x 55 mm MATERIAL Nichel Plated Brass SENSING RANGE 8 mm OUTPUT FUNCTION Normally Closed	ICB12S30N08NCM1		Buy on EAN