At the end of this document you will find links to products related to this catalog. You can go directly to our shop by clicking HERE. HERE

Proximity Inductive Sensors
DC Metal Face
Types IA, M8, M12, M18 and M30

CARLO GAVAZZI

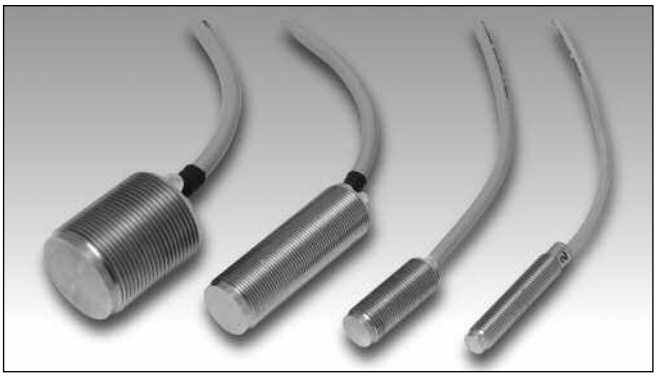

- **Sensing distance: 1 to 15 mm**
- **Flush and non-flush types**
- **Long and short housing**
- **Rated operational voltage: 10 - 30 VDC**
- **Output: DC 100 mA, NPN or PNP**
- **Normally open, Normally closed**
- **Output indication: by yellow LED**
- **Protection: reverse polarity, short circuit, transients**
- **Cable and plug versions**

Product Description

A family of metal face inductive proximity switches in industrial standard stainless steel housings (M8, M12, M18 and M30 types).
Output indication: by yellow LED.
Outputs are open collector NPN or PNP transistors. Available with cable and M8 or M12 plug.
These sensors stand up to abrasion and impact caused by flying metal chips, grit and misaligned or vibrating targets.
In addition, the stainless steel body resists against corrosion and chemical attack, by offering a higher level of protection for more reliable operation and longer life in harsh environments.

Ordering Key

IA08FLF01NOM5

- **Type**
- **Housing style**
- **Housing size**
- **Housing material**
- **Housing length**
- **Detection principle**
- **Sensing distance**
- **Output type**
- **Output configuration**
- **Connection type**

Type Selection M8, M12 and M18

Housing diameter	Connection	Housing style	Rated operating distance S_n	Ordering no. NPN Normally open	Ordering no. PNP Normally open	Ordering no. NPN Normally closed	Ordering no. PNP Normally closed
M8	Cable	Short	1 mm 1)	**IA 08 FSF 01 NO**	**IA 08 FSF 01 PO**	**IA 08 FSF 01 NC**	**IA 08 FSF 01 PC**
M8	Plug	Short	1 mm 1)	**IA 08 FSF 01 NOM5**	**IA 08 FSF 01 POM5**	**IA 08 FSF 01 NCM5**	**IA 08 FSF 01 PCM5**
M8	Cable	Long	1 mm 1)	**IA 08 FLF 01 NO**	**IA 08 FLF 01 PO**	**IA 08 FLF 01 NC**	**IA 08 FLF 01 PC**
M8	Plug	Long	1 mm 1)	**IA 08 FLF 01 NOM5**	**IA 08 FLF 01 POM5**	**IA 08 FLF 01 NCM5**	**IA 08 FLF 01 PCM5**
M8	Cable	Short	2 mm 2)	**IA 08 FSN 02 NO**	**IA 08 FSN 02 PO**	**IA 08 FSN 02 NC**	**IA 08 FSN 02 PC**
M8	Plug	Short	2 mm 2)	**IA 08 FSN 02 NOM5**	**IA 08 FSN 02 POM5**	**IA 08 FSN 02 NCM5**	**IA 08 FSN 02 PCM5**
M8	Cable	Long	2 mm 2)	**IA 08 FLN 02 NO**	**IA 08 FLN 02 PO**	**IA 08 FLN 02 NC**	**IA 08 FLN 02 PC**
M8	Plug	Long	2 mm 2)	**IA 08 FLN 02 NOM5**	**IA 08 FLN 02 POM5**	**IA 08 FLN 02 NCM5**	**IA 08 FLN 02 PCM5**
M12	Cable	Short	2 mm 1)	**IA 12 FSF 02 NO**	**IA 12 FSF 02 PO**	**IA 12 FSF 02 NC**	**IA 12 FSF 02 PC**
M12	Plug	Short	2 mm 1)	**IA 12 FSF 02 NOM1**	**IA 12 FSF 02 POM1**	**IA 12 FSF 02 NCM1**	**IA 12 FSF 02 PCM1**
M12	Cable	Long	2 mm 1)	**IA 12 FLF 02 NO**	**IA 12 FLF 02 PO**	**IA 12 FLF 02 NC**	**IA 12 FLF 02 PC**
M12	Plug	Long	2 mm 1)	**IA 12 FLF 02 NOM1**	**IA 12 FLF 02 POM1**	**IA 12 FLF 02 NCM1**	**IA 12 FLF 02 PCM1**
M12	Cable	Short	4 mm 2)	**IA 12 FSN 04 NO**	**IA 12 FSN 04 PO**	**IA 12 FSN 04 NC**	**IA 12 FSN 04 PC**
M12	Plug	Short	4 mm 2)	**IA 12 FSN 04 NOM1**	**IA 12 FSN 04 POM1**	**IA 12 FSN 04 NCM1**	**IA 12 FSN 04 PCM1**
M12	Cable	Long	4 mm 2)	**IA 12 FLN 04 NO**	**IA 12 FLN 04 PO**	**IA 12 FLN 04 NC**	**IA 12 FLN 04 PC**
M12	Plug	Long	4 mm 2)	**IA 12 FLN 04 NOM1**	**IA 12 FLN 04 POM1**	**IA 12 FLN 04 NCM1**	**IA 12 FLN 04 PCM1**
M18	Cable	Short	5 mm 1)	**IA 18 FSF 05 NO**	**IA 18 FSF 05 PO**	**IA 18 FSF 05 NC**	**IA 18 FSF 05 PC**
M18	Plug	Short	5 mm 1)	**IA 18 FSF 05 NOM1**	**IA 18 FSF 05 POM1**	**IA 18 FSF 05 NCM1**	**IA 18 FSF 05 PCM1**
M18	Cable	Long	5 mm 1)	**IA 18 FLF 05 NO**	**IA 18 FLF 05 PO**	**IA 18 FLF 05 NC**	**IA 18 FLF 05 PC**
M18	Plug	Long	5 mm 1)	**IA 18 FLF 05 NOM1**	**IA 18 FLF 05 POM1**	**IA 18 FLF 05 NCM1**	**IA 18 FLF 05 PCM1**
M18	Cable	Short	8 mm 2)	**IA 18 FSN 08 NO**	**IA 18 FSN 08 PO**	**IA 18 FSN 08 NC**	**IA 18 FSN 08 PC**
M18	Plug	Short	8 mm 2)	**IA 18 FSN 08 NOM1**	**IA 18 FSN 08 POM1**	**IA 18 FSN 08 NCM1**	**IA 18 FSN 08 PCM1**
M18	Cable	Long	8 mm 2)	**IA 18 FLN 08 NO**	**IA 18 FLN 08 PO**	**IA 18 FLN 08 NC**	**IA 18 FLN 08 PC**
M18	Plug	Long	8 mm 2)	**IA 18 FLN 08 NOM1**	**IA 18 FLN 08 POM1**	**IA 18 FLN 08 NCM1**	**IA 18 FLN 08 PCM1**

1) For flush mounting in metal 2) For non-flush mounting in metal

CARLO GAVAZZI

Type Selection M30

Housing diameter	Connec-tion	Housing style	Rated operating distance S_n	Ordering no. NPN Normally open	Ordering no. PNP Normally open	Ordering no. NPN Normally closed	Ordering no. PNP Normally closed
M30	Cable	Short	10 mm 1)	**IA 30 FSF 10 NO**	**IA 30 FSF 10 PO**	**IA 30 FSF 10 NC**	**IA 30 FSF 10 PC**
M30	Plug	Short	10 mm 1)	**IA 30 FSF 10 NOM1**	**IA 30 FSF 10 POM1**	**IA 30 FSF 10 NCM1**	**IA 30 FSF 10 PCM1**
M30	Cable	Long	10 mm 1)	**IA 30 FLF 10 NO**	**IA 30 FLF 10 PO**	**IA 30 FLF 10 NC**	**IA 30 FLF 10 PC**
M30	Plug	Long	10 mm 1)	**IA 30 FLF 10 NOM1**	**IA 30 FLF 10 POM1**	**IA 30 FLF 10 NCM1**	**IA 30 FLF 10 PCM1**
M30	Cable	Short	15 mm 2)	**IA 30 FSN 15 NO**	**IA 30 FSN 15 PO**	**IA 30 FSN 15 NC**	**IA 30 FSN 15 PC**
M30	Plug	Short	15 mm 2)	**IA 30 FSN 15 NOM1**	**IA 30 FSN 15 POM1**	**IA 30 FSN 15 NCM1**	**IA 30 FSN 15 PCM1**
M30	Cable	Long	15 mm 2)	**IA 30 FLN 15 NO**	**IA 30 FLN 15 PO**	**IA 30 FLN 15 NC**	**IA 30 FLN 15 PC**
M30	Plug	Long	15 mm 2)	**IA 30 FLN 15 NOM1**	**IA 30 FLN 15 POM1**	**IA 30 FLN 15 NCM1**	**IA 30 FLN 15 PCM1**

1) For flush mounting in metal 2) For non-flush mounting in metal

Specifications

Rated operational voltage (U_B)	10 to 30 VDC
Ripple	< 10%
Output current (I_e)	≤ 100 mA @ 50°C
No load supply current (I_O)	
IA08, IA12FxF, IA18FxF, IA30FxF	< 10 mA
IA12FxN, IA18FxN, IA30FxN	< 20 mA
Voltage drop (U_d)	
IA08	< 1.5 V
IA12, IA18, IA30	< 2.0 V
Protection	Reverse polarity, short-circuit, transients
Voltage transient	1 kV
Power ON delay (t_v)	< 10 ms
Operating frequency (f)	
IA08Fxxxxxx	500 Hz
IA12FxFxxxx	2000 Hz
IA12FxNxxxx	1000 Hz
IA18FxFxx	2000 Hz
IA18FxNxx	1000 Hz
IA18FxFxxM1	1000 Hz
IA18FxNxxM1	500 Hz
IA30FSFxx	2000 Hz
IA30FSNxx	1000 Hz
IA30FLFxx	300 Hz
IA30FLNxx	150 Hz
IA30FxFxxM1	2000 Hz
IA30FxNxxM1	1000 Hz
Indication for output ON	LED, yellow
Operating sensing distance (S_a)	$0 \le S_a \le 0.81 \times S_n$
Effective operating distance (S_r)	$0.9 \times S_n \le S_r \le 1.1 \times S_n$
Usable operating distance (S_u)	$0.9 \times S_r \le S_u \le 1.1 \times S_r$
Repeated accuracy (R)	≤ 5%
Differential travel (H) (Hysteresis)	1 to 20% of sensing dist.
Ambient temperature	
Operating	-25° to +70°C (-13° to +158°F)
Storage	-25° to +70°C (-13° to +158°F)
Humidity (non-condensing)	35 to 95% RH

Housing material	
Body, Front	Stainless steel AISI 304
Backpart	
Plug	PA-66
Cable	PVC
Nuts	Stainless steel
Connection	
Cable	
IA08	2 m, 3 x 0.15 mm², Ø 3 mm, Grey PVC
IA12, IA18	2 m, 3 x 0.15 mm², Ø 4 mm, Grey PVC
IA30	2 m, 3 x 0.50 mm², Ø 5.8 mm, Grey PVC
Plug	
IA08	M8 x 1
IA12, IA18, IA30	M12 x 1
Cables for plug (-1)	CONH1A/CONH1O series
Degree of protection	IP 67
Weight	
IA08FSFxx	33 g
IA08FSFxxM5	33 g
IA08FLFxx	33 g
IA08FLFxxM5	18 g
IA08FSNxx	32 g
IA08FSNxxM5	32 g
IA08FLNxx	32 g
IA08FLNxxM5	17 g
IA12FSFxx	31 g
IA12FSFxxM1	40 g
IA12FLFxx	67 g
IA12FLFxxM1	153 g
IA12FSNxx	30 g
IA12FSNxxM1	38 g
IA12FLNxx	65 g
IA12FLNxxM1	144 g
IA18FSFxx	110 g
IA18FSFxxM1	74 g
IA18FLFxx	153 g
IA18FLFxxM1	94 g
IA18FSNxx	92 g
IA18FSNxxM1	70 g
IA18FLNxx	144 g
IA18FLNxxM1	91 g

Specifications are subject to change without notice (09.11.12)

Specifications (cont.)

Weight (cont.)	
IA30FSFxx	146 g
IA30FSFxxM1	200 g
IA30FLFxx	217 g
IA30FLFxxM1	187 g
IA30FSNxx	138 g
IA30FSNxxM1	200 g
IA30FLNxx	207 g
IA30FLNxxM1	179 g

Tightening torque	
IA08	4.5 Nm
IA12	25.0 Nm
IA18	60.0 Nm
IA30	230.0 Nm
CE-marking	Yes

Dimensions

Type	Description	A (mm)	B (mm)	C (mm)	D (mm)	E (mm)
IA 08 FSF 01 xx	M8 x 1 x 30	M8 x 1	30	-	-	-
IA 08 FSF 01 xx M5	M8 x 1 x 45	M8 x 1	45	-	-	M8 x 1
IA 08 FLF 01 xx	M8 x 1 x 45	M8 x 1	45	-	-	-
IA 08 FLF 01 xx M5	M8 x 1 x 60	M8 x 1	60	40	-	M8 x 1
IA 08 FSN 02 xx	M8 x 1 x 30	M8 x 1	30	26	4	-
IA 08 FSN 02 xx M5	M8 x 1 x 45	M8 x 1	45	41	4	M8 x 1
IA 08 FLN 02 xx	M8 x 1 x 45	M8 x 1	45	41	4	-
IA 08 FLN 02 xx M5	M8 x 1 x 60	M8 x 1	60	56	4	M8 x 1
IA 12 FSF 02 xx	M12 x 1 x 30	M12 x 1	30	-	-	-
IA 12 FSF 02 xx M1	M12 x 1 x 50	M12 x 1	50	-	-	M12 x 1
IA 12 FLF 02 xx	M12 x 1 x 50	M12 x 1	50	-	-	-
IA 12 FLF 02 xx M1	M12 x 1 x 68	M12 x 1	68	42	-	M12 x 1
IA 12 FSN 04 xx	M12 x 1 x 30	M12 x 1	30	22	8	-
IA 12 FSN 04 xx M1	M12 x 1 x 50	M12 x 1	50	42	8	M12 x 1
IA 12 FLN 04 xx	M12 x 1 x 50	M12 x 1	50	42	8	-
IA 12 FLN 04 xx M1	M12 x 1 x 68	M12 x 1	68	60	8	M12 x 1
IA 18 FSF 05 xx	M18 x 1 x 35	M18 x 1	35	-	-	-
IA 18 FSF 05 xx M1	M18 x 1 x 48	M18 x 1	48	-	-	M12 x 1
IA 18 FLF 05 xx	M18 x 1 x 55	M18 x 1	55	-	-	-
IA 18 FLF 05 xx M1	M18 x 1 x 79	M18 x 1	79	65	-	M12 x 1
IA 18 FSN 08 xx	M18 x 1 x 35	M18 x 1	35	23	12	-
IA 18 FSN 08 xx M1	M18 x 1 x 48	M18 x 1	48	36	12	M12 x 1
IA 18 FLN 08 xx	M18 x 1 x 55	M18 x 1	55	43	12	-
IA 18 FLN 08 xx M1	M18 x 1 x 79	M18 x 1	79	67	12	M12 x 1
IA 30 FSF 10 xx	M30 x 1.5 x 35	M30 x 1.5	35	-	-	-
IA 30 FSF 10 xx M1	M30 x 1.5 x 48	M30 x 1.5	48	-	-	M12 x 1
IA 30 FLF 10 xx	M30 x 1.5 x 55	M30 x 1.5	55	-	-	-
IA 30 FLF 10 xx M1	M30 x 1.5 x 78	M30 x 1.5	78	-	-	M12 x 1
IA 30 FSN 15 xx	M30 x 1.5 x 35	M30 x 1.5	35	25	10	-
IA 30 FSN 15 xx M1	M30 x 1.5 x 48	M30 x 1.5	48	38	10	M12 x 1
IA 30 FLN 15 xx	M30 x 1.5 x 55	M30 x 1.5	55	45	10	-
IA 30 FLN 15 xx M1	M30 x 1.5 x 78	M30 x 1.5	78	68	10	M12 x 1

Dimensions: cable type

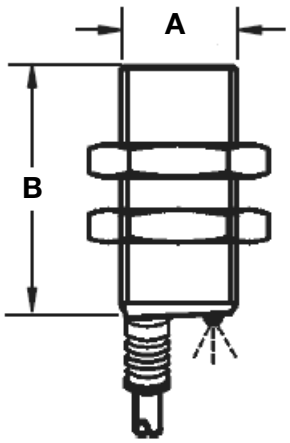

IA xx FSF xx

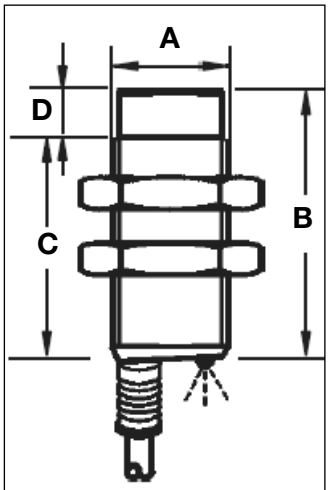

IA xx FSN xx

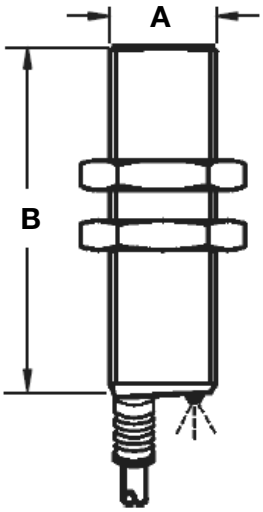

IA xx FLF xx

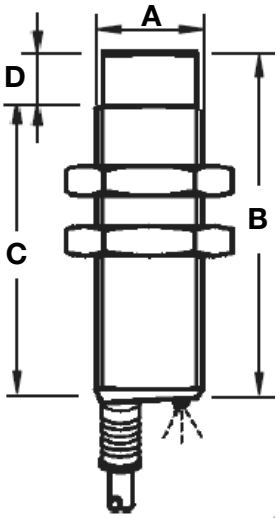

IA xx FLN xx

Dimensions: plug type

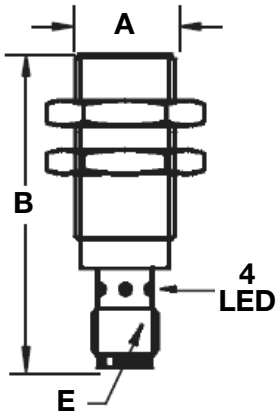

IA xx FSF xx Mx

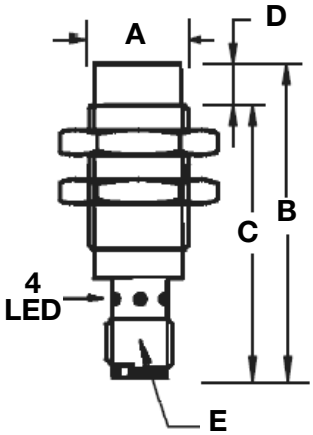

IA xx FSN xx Mx

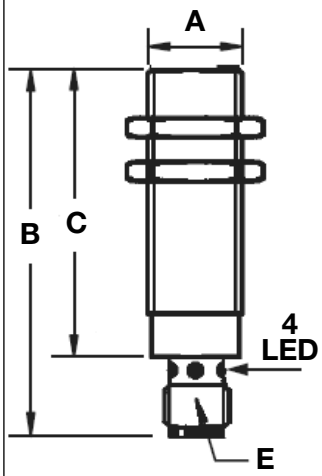

IA xx FLF xx Mx

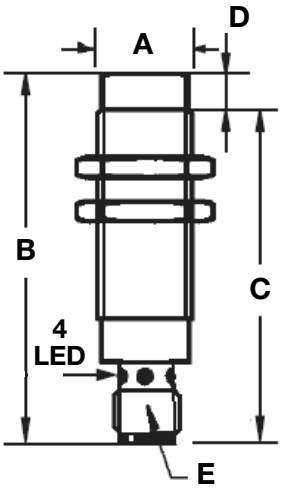

IA xx FLN xx Mx

Wiring Diagrams

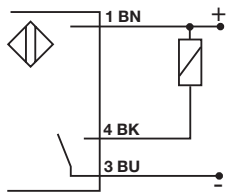

NPN - Normally open

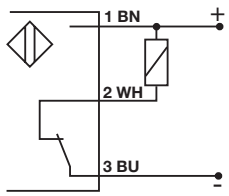

NPN - Normally closed

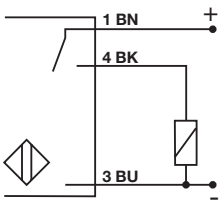

PNP - Normally open

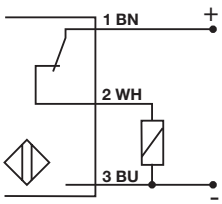

PNP - Normally closed

Specifications are subject to change without notice (09.11.12)

Installation Hints

To avoid interference from inductive voltage/ current peaks, separate the prox. switch power cables from any other power cables, e.g. motor, contactor or solenoid cables 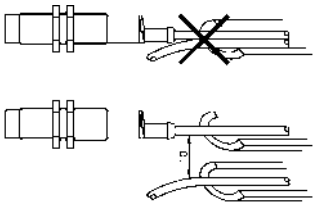	Relief of cable strain 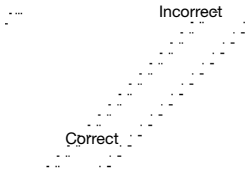 The cable should not be pulled	Protection of the sensing face 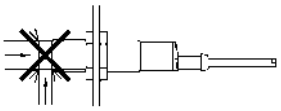 A proximity switch should not serve as mechanical stop	Switch mounted on mobile carrier 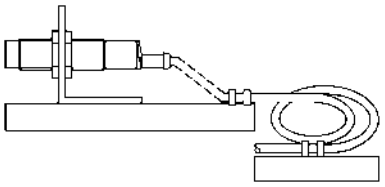 Any repetitive flexing of the cable should be avoided

Delivery Contents

- Inductive proximity switch IA..
- 2 stainless steel nuts
- 1 stainless steel washer
- Packaging: plastic bag

Automatización Eléctrica
Especialistas en Automatización

Below is a list of articles with direct links to our shop Electric Automation Network where you can see:

- Quote per purchase volume in real time.
- Online documentation and datasheets of all products.
- Estimated delivery time enquiry in real time.
- Logistics systems for the shipment of materials almost anywhere in the world.
- Purchasing management, order record and tracking of shipments.

To access the product, click on the green button.

Product	Code	Reference	Product link
Selected parameters OUTPUT FUNCTION NO MOUNTING Non Flush HOUSING M30 SENSING RANGE >14 to 29 mm OUTPUT DC NPN CONNECTION Plug WIRE 3-wire MATERIAL Metal face SYSTEM Proximity Sensor Others HOUSING M30 x 80 mm MATERIAL Stainless steel SENSING RANGE 15 mm OUTPUT FUNCTION Normally Open	IA30FLN15NOM1		Buy on EAN