At the end of this document you will find links to products related to this catalog. You can go directly to our shop by clicking HERE. HERE

Combined Motion and Presence Detector for Automatic Curved and Straight Sliding Doors GUARDIAN 2

CARLO GAVAZZI

- **Overhead sensor for curved and straight sliding doors**
- **Motion and presence detection in one unit**
- **Digital Video Camera Technology**
- **Easy teach of presence zone**
- **Environmental adaptation**
- **No Crosstalk between sensors**
- **Separate motion and presence output**
- **2 x SPST relay outputs**
- **Supply voltage: 12 to 24 VAC/DC**
- **LED indication for: Power, Motion and Presence**
- **CE, UL325 and TÜV approved**

Baumuster geprüft

Product Description

The GUARDIAN 2 is an overhead sensor for pedestrian sliding doors. The sensor has combined motion and presence (safe) detection zones. The sensor is based on CMOS camera technology and detection on image processing. The motion zone reacts only to movement whereas the presence zone reacts to both movement and presence. The motion zone can be blanked in 3 directions (front, left and right) in order to avoid detection of unwanted objects. The presence zone is taught into the sensor by recognition of standard test targets in the setup phase - it will adapt to the shape of a curved or straight sliding door. The presence zone also adapts to the surroundings to work in different weather conditions. The sensor has separate outputs for the motion and presence zones as well as a test input to test the sensor function for each door cycle.

Ordering Key

GUARDIAN 2

Type Selection

Housing size	Ordering no.
210 x 77 x 58 mm	**GUARDIAN 2**

Specifications

Rated operational voltage (U_e)	12 - 24 VAC (12 - 24 VCA) RMS incl. ripple 50-60 Hz, ±15% tolerance 12 - 24 VDC (12 - 24 VCC) ±15% tolerance
No load supply current (I_e)	**Typical** / **Max.** 192 mA / 230 mA @ 12V AC 146 mA / 170 mA @ 12V DC 103 mA / 120 mA @ 24V AC 65 mA / 80 mA @ 24V DC
Technology	Digital video camera technology
Power ON delay	5 seconds
Output function*	
Safety and Motion Zone	Relay – SPST
Common relay data:	1A DC 30VDC
Operations minimum	600.000 @ 0,5A, 50 VAC/ 30 VDC
Operations minimum	100.000 @ 1A, 30 VDC

Test input*	Max. input current 5 mA
Active high:	ON > 9 VAC/VDC OFF < 6 VAC/VDC
Active low:	ON < 6 VAC/VDC OFF > 9 VAC/VDC
Sensitivity	Adjusting in 7 steps
Presence zone reaction time	
Reaction time:	210 ms (20% contrast, object speed 1 m/s, test body CA (DIN18650-1))
Fall time:	500 ms
Motion zone reaction time	
Reaction time:	1,2 s (20% contrast, object speed 1 m/s, test body CA (DIN18650-1))
Fall time:	500 ms

* UL connected to supply class 2

CARLO GAVAZZI

Specifications (cont.)

Presence time (Background relearn time) In accordance with DIN18650 Not in accordance with DIN18650	 7 step rotary switch 1 min, 5 min. 10 sec, 30 sec.
Vibration	10 to 150 Hz 0.5 mm/7.5g (IEC 60068-2-6)
Shock	2 x 1 m and 100 x 0.5 m (IEC 60068-2-32)
Ambient temperature range Operating Store	 -25° to +55°C (-13° to +131°F) -25° to +80°C (-13° to +176°F)
Ambient light	10 lux - 50.000 lux 40 lux - 50.000 lux, TÜV approved, measured at the sensor surface
Contrast	Min. 20% contrast between the floor and object
Material Housing and cover Front glass	 ABS Black Clear transparent, polycarbonate.
Connection cable	3 m 8 x 0,14 mm² LIYY grey Max. cable length: 10 m.
Environment protection	IP64 (EN 60529, 60947-1)
Installation category	III (IEC 60664 / 60664A / EN 60947-1)
Pollution degree	3 (IEC 60664 / 60664A / EN 60947-1)
Humidity	0 % to 90 % relative, non condensing

Type of ESPE Type 2	 The sensing functions have to be tested for each door cycle by applying a test signal to the terminals 2+3. See test input.
LED indications Green LED Yellow LED Red LED	 Power ON Motion detected Presence detected For special LED functions see page 3
Rated Insulation voltage	50 VDC
Weight	460 g
Electromagnetic compatibility	In acc. with EMC directive 2004/108/EG Immunity in acc. with EN61326-1 and EN61326-3-1
Marking	CE
TÜV-Approval Baumuster geprüft	In acc. with machinery directive 2006/42/EC, annex I DIN 18650-1 § 5.7.4, edition 2005 (prEN16005), EN13241-1, EN 12978, edition 2003, EN61508, edition 2001, ENISO13849-1: 2008 cat.2 pl. c for presence detection
UL-Approval c us	UL325, CSA-C22.2 No.247

** UL approved temperature range -25° to +40°C (-13° to +104°F)

Specifications straight sliding door

Motion zone sensing area Height 180 cm Height 220 cm Height 300 cm	(W x D) 246 x 204 cm 300 x 249 cm 410 x 340 cm The motion area can be blanked from left, right and front in 7 steps on three rotary switches
Presence zone sensing area Height 180 cm Height 220 cm Height 300 cm	(W x D) 42 cm x door width 51 cm x door width 70 cm x door width
Mounting height	1.8 m to 3.0 m
Placement of sensor Horisontal distance from door Vertical distance from door	 max 50 cm in front of the door. The sensor must be able to see the door opening. 10 cm from the top of the door opening

Specifications curved sliding door

Door radius size as a function of mounting height Height 200 cm Height 250 cm Height 300 cm	 Radius 130 cm Radius 170 cm Radius 200 cm
Sensor distance from curved door (a) as a function of curved door radius (Fig. 1) Radius 80 cm Radius 90 cm Radius 100 cm Radius 110 cm Radius 120 cm Radius 130 cm Radius 140 cm Radius 150 cm Radius 160 cm Radius 170 cm Radius 180 cm Radius 190 cm Radius 200 cm	 Distance 8.2 cm Distance 10.2 cm Distance 12.2 cm Distance 14.3 cm Distance 16.7 cm Distance 18.7 cm Distance 21.0 cm Distance 23.4 cm Distance 25.8 cm Distance 28.3 cm Distance 30.8 cm Distance 33.3 cm Distance 35.9 cm
Mounting height	1.8 m to 3.0 m

Specifications are subject to change without notice (01.06.2012)

CARLO GAVAZZI

Operation Diagram

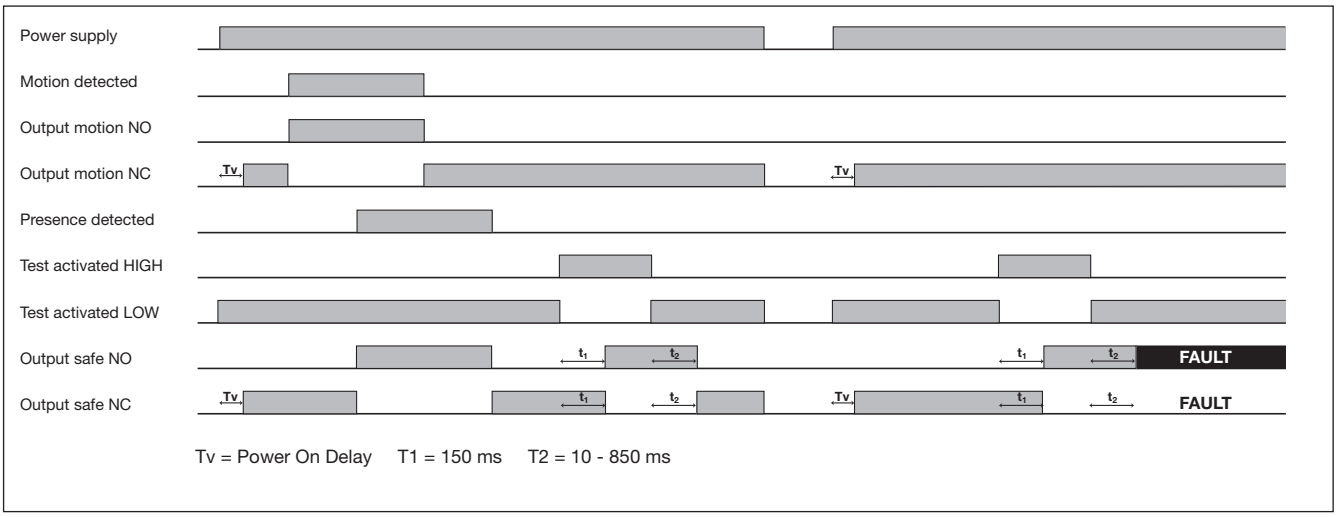

Fig. 1

Horizontal distance to door (a)

Component Guide

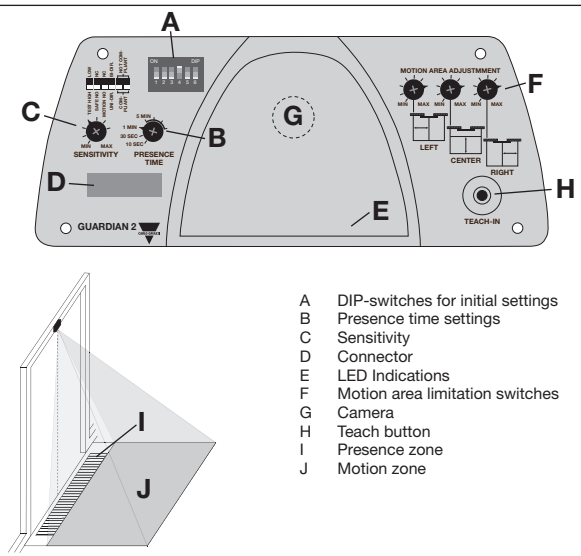

A DIP-switches for initial settings
B Presence time settings
C Sensitivity
D Connector
E LED Indications
F Motion area limitation switches
G Camera
H Teach button
I Presence zone
J Motion zone

DIP-Switch Settings

Set up the DIP-switches to match the door controller.

DIP-switch 1 - Sensor test input
- Test input Active Low
- Test input Active High

DIP-switch 2 - Safety output
- Normally closed (NC)
- Normally open (NO)

DIP-switch 3 - Motion output
- Normally closed (NC)
- Normally open (NO)

DIP-switch 4 - Direction recognittion
- Bi-directional mode
- Uni-directional mode)

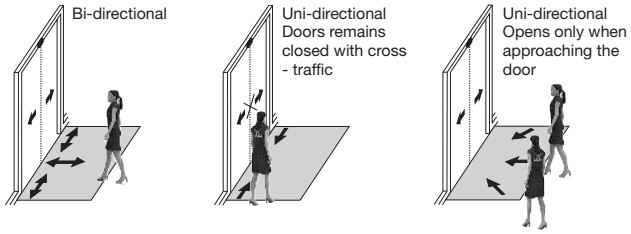

DIP-switch 5 and 6
- Not in accordance with DIN18650-1 (prEN16005)
- In accordance with DIN18650-1 (prEN16005)
- Not valid (red LED flashes and output relays is set in safe mode)

LED Indications

Situation / LED	Yellow	Red	Green
Normal	Motion detected	Presence detected	Power On
No presence zone stored	Running light on all LED's		
Teach mode	Flashing simultaneously		
Background stored	Off	Off	Flashing
Not allowed DIN18650	Off	Flashing	On
Self test failed	Flashing simultaneously		On
Sensor error Contact installer	On	On	Off

Dimensions

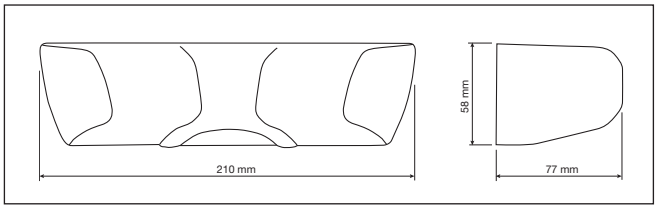

Delivery Contents

- GUARDIAN 2 door sensor
- User Manual
- Drilling template
- 3 m connection cable with connector
- **Packaging:** Cardboard box

Wiring Diagram

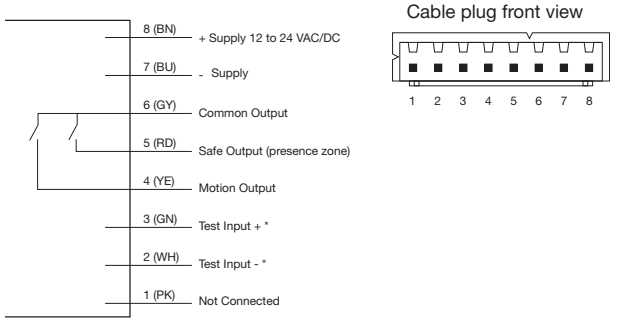

* Active high: ON > 9 VAC/DC, OFF < 6 VAC/DC
Active low: ON < 6 VAC/DC, OFF > 9 VAC/DC

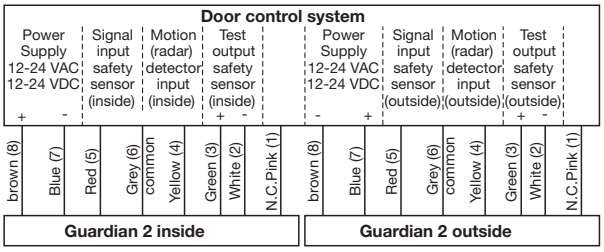

Below is a list of articles with direct links to our shop Electric Automation Network where you can see:

- Quote per purchase volume in real time.
- Online documentation and datasheets of all products.
- Estimated delivery time enquiry in real time.
- Logistics systems for the shipment of materials almost anywhere in the world.
- Purchasing management, order record and tracking of shipments.

To access the product, click on the green button.

Product	Code	Reference	Product link
Selected parameters SYSTEM Vision Sensor HOUSING rectangular SENSING RANGE 1 ... 5 m CONNECTION Terminals OUTPUT RELAY SPST MATERIAL Plastic Others SENSING RANGE 3 m HOUSING 210 x 77 x 58 mm MATERIAL PC + ABS ADDITIONAL Motion and Presence Detector	GUARDIAN2		Buy on EAN