At the end of this document you will find links to products related to this catalog. You can go directly to our shop by clicking HERE. HERE

Monitoring Relays
Frequency monitoring
Type DFC01

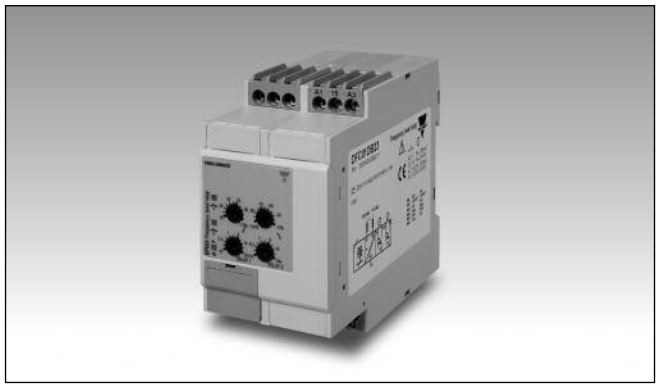

- **Over and under frequency monitoring relay**
- **Measures if power supply frequency is within set limits**
- **Measures on own power supply**
- **Separately adjustable upper/lower level on relative scale**
- **Separately adjustable delay functions (0.1 to 30 s)**
- **Output: 2 x 8 A SPDT relays**
- **For mounting on DIN-rail in accordance with DIN/EN 50 022**
- **45 mm Euronorm housing**
- **LED indication for relays, alarm and power supply ON**

Product Description

DFC01 is a precise frequency monitoring relay. It monitors its own power supply. Overfrequency and underfrequency can be monitored separately with two independent setpoints, delay times and relay outputs.
The LED's indicate the state of the alarm and the output relay.

Ordering key

DFC 01 D B23

- **Housing**
- **Function**
- **Type**
- **Item number**
- **Output**
- **Power Supply**

Type Selection

Mounting	Output	Supply: 24/48 VAC	Supply: 115/230 VAC
DIN-rail	2 x SPDT	**DFC 01 D B48**	**DFC 01 D B23**

Input Specifications

Input		
Own power supply	A1, A2 or A2, A3	
Measuring ranges	**Upper level**	**Lower level**
Selectable by DIP-switches		
2 Hz range	+0.2 to +2.2 Hz	-2.2 to -0.2Hz
50 Hz	50.2 to 52.2 Hz	47.8 to 49.8 Hz
60 Hz	60.2 to 62.2 Hz	57.8 to 59.8 Hz
10 Hz range	+1 to +11 Hz	-11 to -1 Hz
50 Hz	51 to 61 Hz	39 to 49 Hz
60 Hz	61 to 71 Hz	49 to 59 Hz
Ranges		
Upper frequency level	+10 to +110% of the selected range	
Lower frequency level	-110 to -10% of the selected range	
Hysteresis (frequency)		
2 Hz range	~ 0.05 Hz	
10 Hz range	~ 0.25 Hz	

Output Specifications

Output		2 x SPDT relays N.E.
Rated insulation voltage		250 VAC
Contact ratings ($AgSnO_2$)		µ
Resistive loads	AC 1	8 A @ 250 VAC
	DC 12	5 A @ 24 VDC
Small inductive loads	AC 15	2.5 A @ 250 VAC
	DC 13	2.5 A @ 24 VDC
Mechanical life		≥ 30 x 10^6 operations
Electrical life		≥ 10^5 operations (at 8 A, 250 V, cos φ = 1)
Operating frequency		≤ 7200 operations/h
Dielectric strength		
Dielectric voltage		≥ 2 kVAC (rms)
Rated impulse withstand volt.		4 kV (1.2/50 µs)

Supply Specifications

Power supply		Overvoltage cat. III (IEC 60664, IEC 60038)
Rated operational voltage through terminals:		A1, A2 or A3, A2
	B48:	24/48 VAC ± 15% 40 to 70 Hz, insulated
	B23:	115/230 VAC ± 15% 40 to 70 Hz, insulated
Rated operational power		5 VA

CARLO GAVAZZI

General Specifications

Power ON delay	1 s ± 0.5 s
Accuracy	(15 min warm-up time)
Temperature drift	± 1000 ppm/°C
Delay ON alarm	± 10% on set value ± 50 ms
Repeatability	± 0.5% on full-scale
Reaction time	
Frequency level	
Alarm ON delay:	< 200 ms (delay < 0.1 s)
Alarm OFF delay:	< 200 ms (delay < 0.1 s)
Indication for	
Power supply ON	LED, green
Alarm ON	LED, red (flashing 2 Hz during delay time)
Output relays ON	2 x LED, yellow
Environment	(EN 60529)
Degree of protection	IP 20
Pollution degree	3
Operating temperature	-20 to +60°C, R.H. < 95%
Storage temperature	-30 to 80°C, R.H. < 95%

Housing	
Dimensions	45 x 80 x 99.5 mm
Material	PA66 or Noryl
Weight	Approx. 220 g
Screw terminals	
Tightening torque	Max. 0.5 Nm acc. to IEC 60947
Product standard	EN 60255-6
Approvals	UL, CSA
CE Marking	L.V. Directive 2006/95/EC EMC Directive 2004/108/EC
EMC	
Immunity	According to EN 60255-26 According to EN 61000-6-2
Emissions	According to EN 60255-26 According to EN 61000-6-3

Mode of Operation

DFC01 monitors the frequency value of its own power supply.

Example 1 (N.D. relay)

Both relays are OFF as soon as the frequency is above the lower setpoint and below the upper setpoint. When the measured frequency exceeds the upper set level for more than the set delay time relay 1 is turned ON; if it drops below the lower set level for more than the set delay time relay 2 is turned ON. Each relay releases when the measured frequency comes back within its limits. The red LED flashes until the delay time has expired or the measured value falls off the limits.

Example 2 (N.E. relay)

The relay operates and the yellow LED is ON as long as the measured frequency is within the upper and lower limits.
Relay 1 releases in alarm position as soon as the measured frequency exceeds the upper set level for more than the set delay time; relay 2 releases as soon as the measured frequency drops below the lower set level for more than the set delay time. The red LED flashes until the delay time has expired or the measured value comes back within the limits. Each relay is activated when the measured frequency comes back within its limits.

Function/Range/Level/Time Setting

Select the desired function setting the DIP-switches 1 to 6 as shown on the right. To access the DIP-switches open the plastic cover using a screwdriver as shown below.

Centre left knob:
Setting of upper frequency level on relative scale.

Centre right knob:
Setting of lower frequency level on relative scale.

Lower knobs:
Setting of delays on alarm time on absolute scale:
0.1 to 30 s.

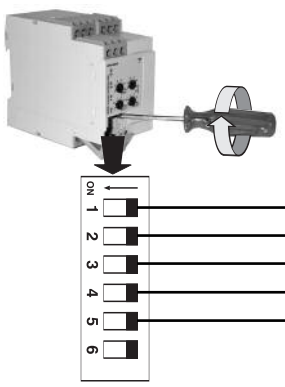

Output
ON: 2 x SPDT relays
OFF: 1 x DPDT relay

Relay working mode
ON: Normally De-energized
OFF: Normally Energized

Power ON delay
ON: 6 s ± 0.5 s
OFF: 1 s ± 0.5 s

System frequency
ON: 60 Hz
OFF: 50 Hz

Frequency setpoint range
ON: 2 Hz
OFF: 10 Hz

Specifications are subject to change without notice (26.05.10)

CARLO GAVAZZI

Operation Diagrams

Ex. 1

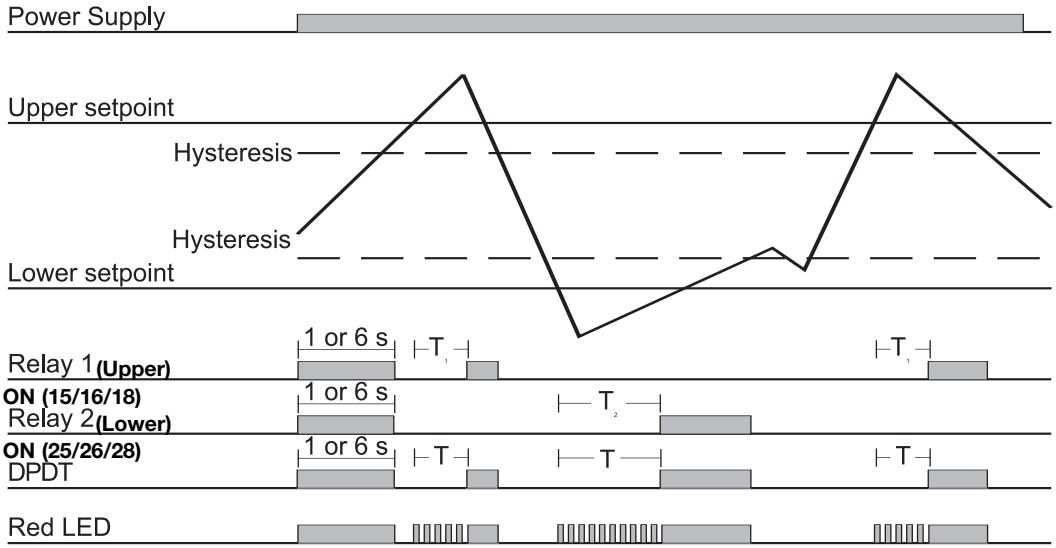

Ex. 2

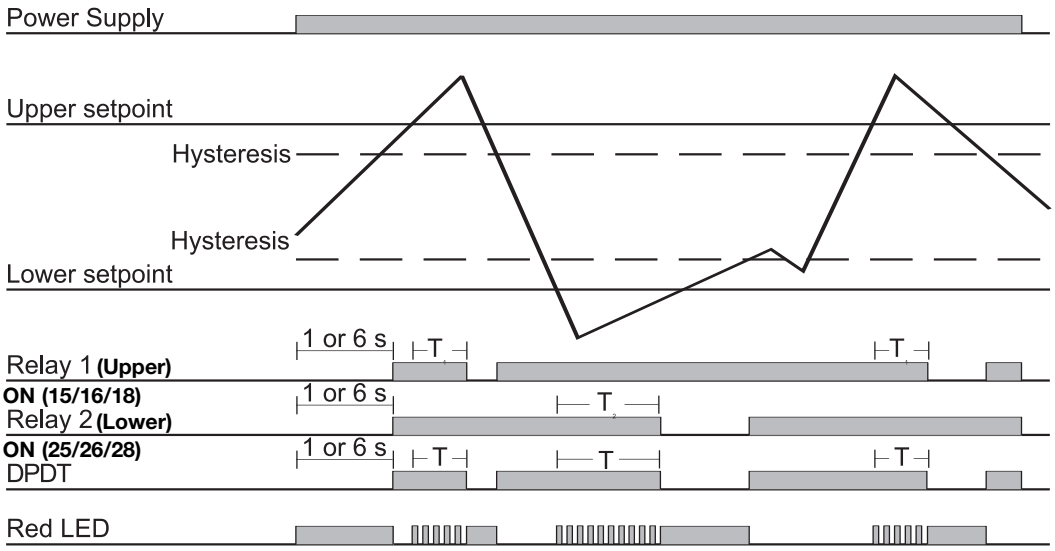

Wiring Diagram

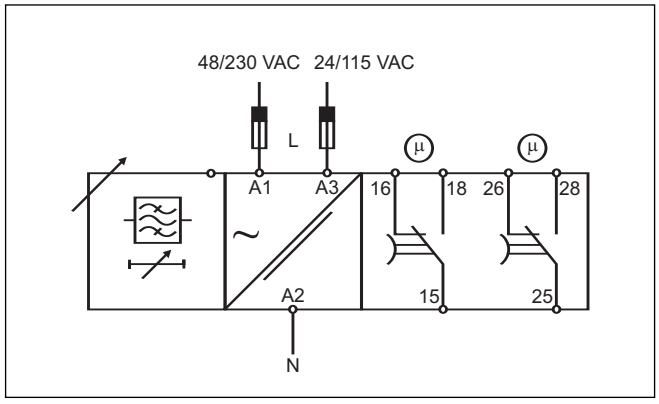

Dimensions

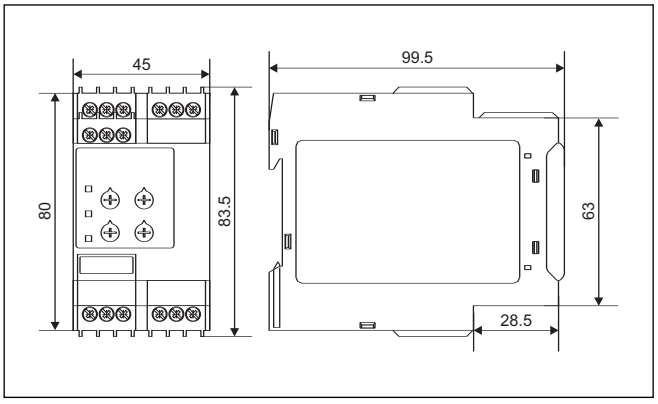

Automatización Eléctrica
Especialistas en Automatización

Below is a list of articles with direct links to our shop Electric Automation Network where you can see:

- Quote per purchase volume in real time.
- Online documentation and datasheets of all products.
- Estimated delivery time enquiry in real time.
- Logistics systems for the shipment of materials almost anywhere in the world.
- Purchasing management, order record and tracking of shipments.

To access the product, click on the green button.

Product	Code	Reference	Product link
Selected parameters OUTPUT SIGNAL 2 relays SETPOINTS 2, adjustable MONITORED VARIABLE Frequency monitoring Others SIZE 45 mm POWER SUPPLY RANGE 115/230 VAC MONITORING FUNCTION Over and under frequency MOUTING DIN-rail INPUT RANGE 50-60 Hz DELAY 2, adjustable	DFC01DB48		Buy on EAN