At the end of this document you will find links to products related to this catalog. You can go directly to our shop by clicking HERE. HERE

Accessories
AC Solid-core Current Transformer
Type CTD-8V / CTD-8H (max 30x80 mm)

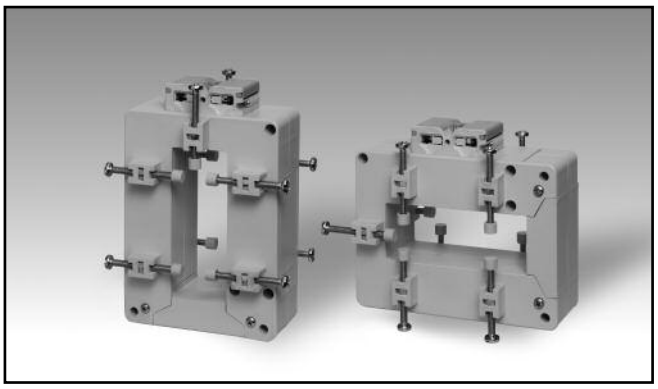

- Bus-bar type solid- core current transformer
- Class 0.5 accuracy
- Currents from 150 A to 2500 A
- Up to 10 Bus-bar isolated fixing screws
- Double screw terminals (up to 8-wire connections)
- Sealable terminal block covers

Product Description

Solid-core current transformer with bus-bar mountng facility. Rated primary currents from 150 A to 2500 A.

Ordering Key

CTD-8V 1500 5A XXX

- **Model**
- **Primary current**
- **Secondary current**
- **Option**

Type Selection

Model		Primary current	Secondary current	Option	
CTD-8V:	vertical mounting	From 150A to 2500A	**1A (on request)**	**XXX:**	none
CTD-8H:	horizontal mounting	(Refer to the Range Table)	**5A**	**XTX:**	tropicalization

Input Specifications

Operating frequency	48 to 62 Hz
Max. system voltage	0.72 kV
Rated insulation level	3 kV/1 min. @ 50 Hz
Insulation class	E (max 75°C)
Short-time current rating I_{th} I_{dyn}	 Typical 100 I_n /1 s 2.5 I_{th} The short-time thermal current I_{th} is anyway limited by the cable/bus-bar size
Extended current rating	Refer to the Range Table
Security factor (FS)	≤ 5 (Class: 0.5, 1 and 3)

General Specifications

Standards	According to EN60044-1
Housing	ABS, self-extinguishing: UL 94 V-0
Mounting	Bus-bar mounting
Standard accessories	Two terminal block screws. Ten bus-bar fixing screws. Ten plastic caps for bus-bar fixing screws. Two sealable terminal block covers.
Special features	1 A secondary current, Tropicalization

Working temperature	-25°C to: refer to the Range Table (-13°F to: refer to the Range Table) (R.H. < 90% non condensing @ 40°C)
Storage temperature	-30°C to +70°C (-22°F to 158°F) (R.H. < 90% non condensing @ 40°C)
Approvals	CE. cURus and CSA (150A to 1000A)
Connection Cable cross section area	Screw type From 1.5 to 6 mm^2 Min/Max screws tightening torque relevant to terminal block screws: From 1 to 2 Nm Max screws tightening torque relevant to the cable/bus-bar fixing screws: 0,3 Nm
Protection degree	IP00 (without sealable terminal covers) IP20 (with sealable terminal block covers + wire terminals)
Bus-bar size	Max. 30x80 mm
Weight	From 450 to 700 g

Output Specifications

Rated secondary current	5 A or 1 A

CARLO GAVAZZI

Range Table

Model CTD-8V and CTD-8H from 150A to 750A					
Primary Current	Temperature	Extended current rating	Burden (VA)		
A			CL 0.5	CL 1	CL 3
150	(@60°C/140°F)	120%	-	-	2
200	(@60°C/140°F)	120%	-	-	4
250	(@60°C/140°F)	120%	-	-	5
300	(@60°C/140°F)	120%	-	2	6
400	(@60°C/140°F)	120%	3	5	8
500	(@60°C/140°F)	120%	5	7	10
600	(@60°C/140°F)	120%	6	10	12
700	(@60°C/140°F)	120%	6	10	12
750	(@60°C/140°F)	120%	8	12	15

Model CTD-8V and CTD-8H from 800A to 2500A					
Primary Current	Temperature	Extended current rating	Burden (VA)		
A			CL 0.5	CL 1	CL 3
800	(@60°C/140°F)	120%	8	12	15
1000	(@50°C/122°F)	120%	10	15	20
1200	(@50°C/122°F)	120%	12	15	20
1250	(@50°C/122°F)	120%	12	15	20
1500	(@50°C/122°F)	100% **(+)**	15	20	25
1600	(@50°C/122°F)	100% **(*)**	15	20	25
2000	(@50°C/122°F)	100% **(*)**	20	25	30
2500	(@40°C/104°F)	100% **(*)**	25	30	40

(*) A max overload of 120% for 1 min. every 30 min. is allowed.
(+) A continuous overload of 120% of the range is allowed @ amb. temp. 40°C max.

Benefits

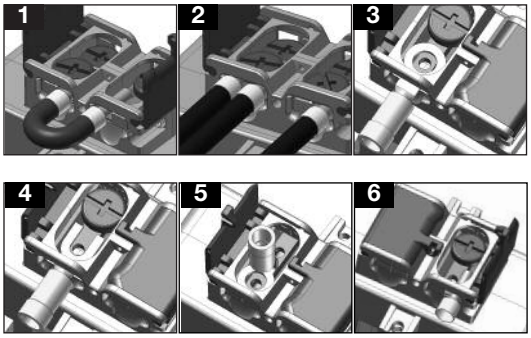

- Bridging of current transformer output without changing the connection of the secondary, so to avoid any output overvoltage during either the maintenance or the installation procedure (see figure 1).
- Easy output and earth connection (see fig. 2).
- Screw terminals compatible with any kind of wire terminals (see figure 3-4-5-6).

Dimensions Vertical mounting (mm)

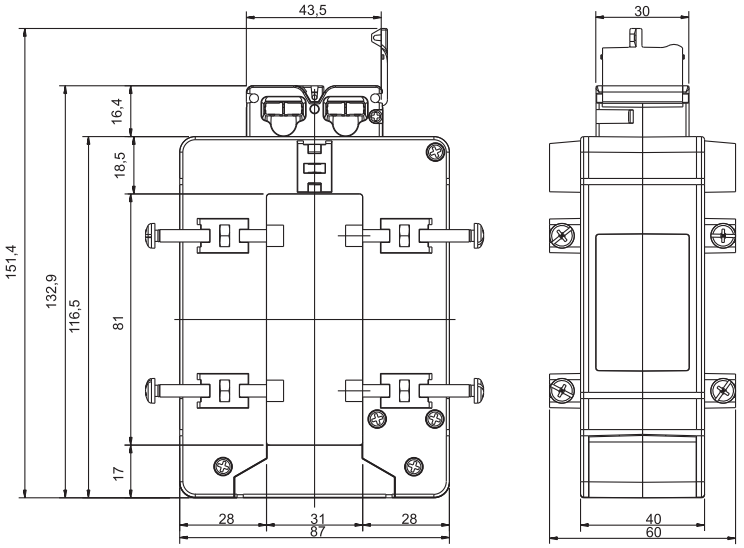

Dimensions Horizontal mounting (mm)

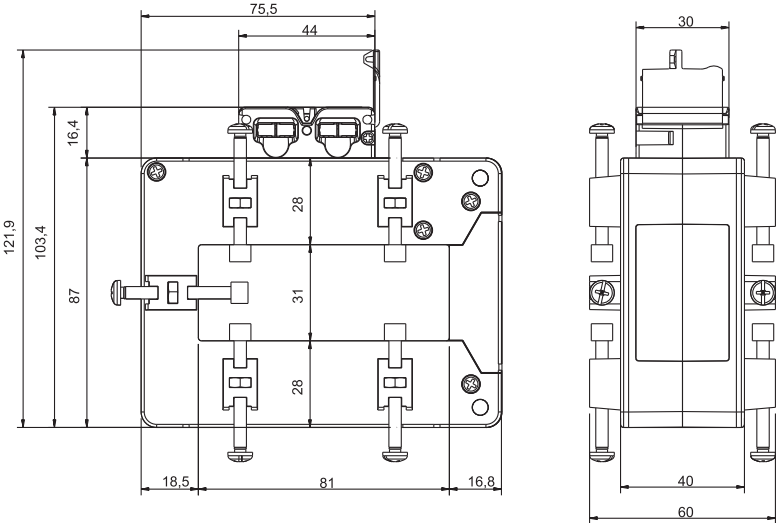

Wiring Diagram

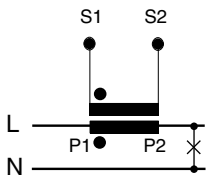

Below is a list of articles with direct links to our shop Electric Automation Network where you can see:

- Quote per purchase volume in real time.
- Online documentation and datasheets of all products.
- Estimated delivery time enquiry in real time.
- Logistics systems for the shipment of materials almost anywhere in the world.
- Purchasing management, order record and tracking of shipments.

To access the product, click on the green button.

Product	Code	Reference	Product link
Selected parameters PRIMARY CURRENT 1200... 2500A PRIMARY TYPE Solid-core SECONDARY CURRENT 5A Others PRIMARY CURRENT 2500A MAX BUS BAR SIZE 30x80mm MOUTING DIN-rail, Panel, Bus-bar	CTD8H25005AXXX		Buy on EAN