At the end of this document you will find links to products related to this catalog. You can go directly to our shop by clicking HERE. HERE

Accessories
AC Solid-core Current Transformer
Type CTD-10V / CTD10-H (max 50x125 mm)

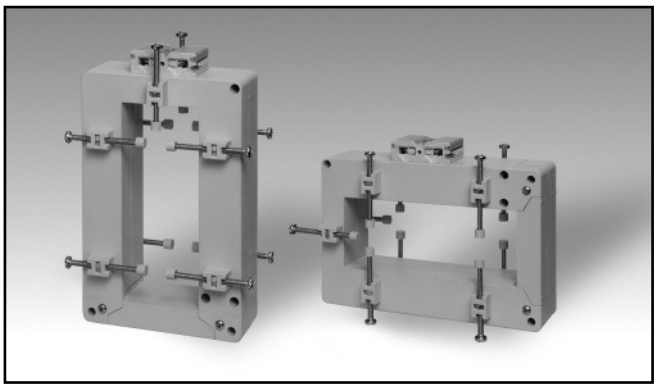

- **Bus-bar type solid-core current transformer**
- **Class 0.5 accuracy**
- **Currents from 400 A to 3200 A**
- **Up to 10 Bus-bar isolated fixing screws**
- **Double screw terminals (up to 8-wire connections)**
- **Sealable terminal block covers**

Product Description

Solid-core current transformer with bus-bar mounting facility. Rated primary currents from 400 A to 3200 A.

Ordering Key

CTD-10V 2000 5A XXX

- **Model**
- **Primary current**
- **Secondary current**
- **Option**

Type Selection

Model	Primary current	Secondary current	Option
CTD-10V: vertical mounting **CTD-10H:** horizontal mounting	From 400A to 3200A (Refer to the Range Table)	**1A (on request)** **5A**	**XXX:** none **XTX:** tropicalization

Input Specifications

Operating frequency	48 to 62 Hz
Max. system voltage	0.72 kV
Rated insulation level	3 kV/1 min. @ 50 Hz
Insulation class	E (max 75°C)
Short-time current rating I_{th} I_{dyn}	 Typical 100 I_n /1 s 2.5 I_{th} The short-time thermal current I_{th} is anyway limited by the cable/bus-bar size
Extended current rating	Refer to the Range Table
Security factor (FS)	≤ 5 (Class: 0.5, 1 and 3)

General Specifications

Standards	According to EN60044-1
Housing	ABS, self-extinguishing: UL 94 V-0
Mounting	Bus-bar mounting
Standard accessories	Two terminal block screws. Ten bus-bar fixing screws. Ten plastic caps for bus-bar fixing screws. Two sealable terminal block covers.
Special features	1 A secondary current, Tropicalization

Working temperature	-25°C to: refer to the Range Table (-13°F to: refer to the Range Table) (R.H. < 90% non condensing @ 40°C)
Storage temperature	-30°C to +70°C (-22°F to 158°F) (R.H. < 90% non condensing @ 40°C)
Approvals	CE. cURus and CSA (400A to 2000A)
Connection Cable cross section area	Screw type From 1.5 to 6 mm^2 Min/Max screws tightening torque relevant to terminal block screws: From 1 to 2 Nm Max screws tightening torque relevant to the cable/bus-bar fixing screws: 0,3 Nm
Protection degree	IP00 (without sealable terminal covers) IP20 (with sealable terminal block covers + wire terminals)
Bus-bar size	Max. 50x125 mm
Weight	From 450 to 700 g

Output Specifications

Rated secondary current	5 A or 1 A

Range Table

Model CTD-10V and CTD-10H from 400A to 1200A					
Primary Current	Temperature	Extended current rating	Burden (VA)		
A			CL 0.5	CL 1	CL 3
400	(@60°C/140°F)	120%	1	7	10
500	(@60°C/140°F)	120%	3	10	14
600	(@60°C/140°F)	120%	5	12	17
700	(@60°C/140°F)	120%	8	15	20
750	(@60°C/140°F)	120%	10	15	20
800	(@60°C/140°F)	120%	10	15	20
1000	(@60°C/140°F)	120%	12	20	25
1200	(@50°C/122°F)	120%	15	25	30

Model CTD-10V and CTD-10H from 1250A to 3200A					
Primary Current	Temperature	Extended current rating	Burden (VA)		
A			CL 0.5	CL 1	CL 3
1250	(@50°C/122°F)	120%	15	25	30
1500	(@50°C/122°F)	120%	20	30	40
1600	(@50°C/122°F)	120%	20	30	40
2000	(@50°C/122°F)	100% **(+)**	25	40	50
2500	(@50°C/122°F)	100% **(*)**	30	50	60
3000	(@40°C/104°F)	100% **(*)**	30	50	60
3200	(@40°C/104°F)	100% **(*)**	30	50	60

(*) A Max overload of 120% for 1 min. every 30 min. is allowed.
(+) A continuous overload of 120% of the range is allowed @ amb. temp. 40°C max.

Benefits

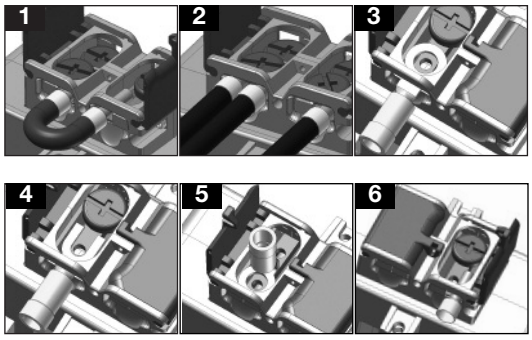

- Bridging of current transformer output without changing the connection of the secondary, so to avoid any output overvoltage during either the maintenance or the installation procedure (see figure 1).
- Easy output and earth connection (see fig. 2).
- Screw terminals compatible with any kind of wire terminals (see figure 3-4-5-6).

Dimensions Vertical mounting (mm)

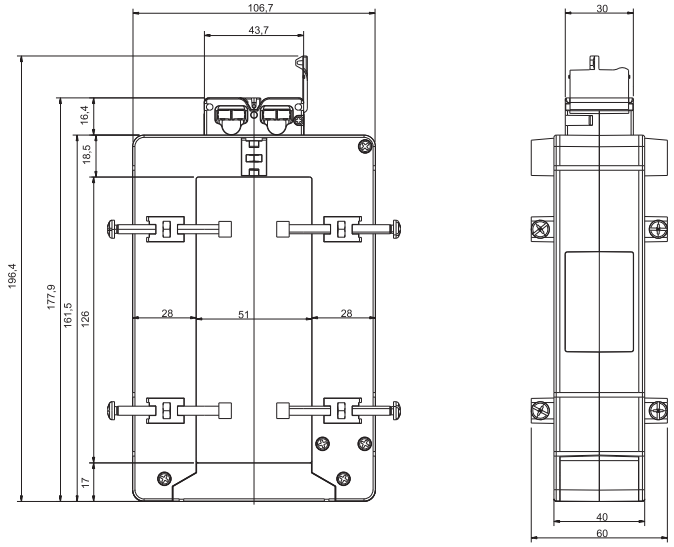

Dimensions Horizontal mounting (mm)

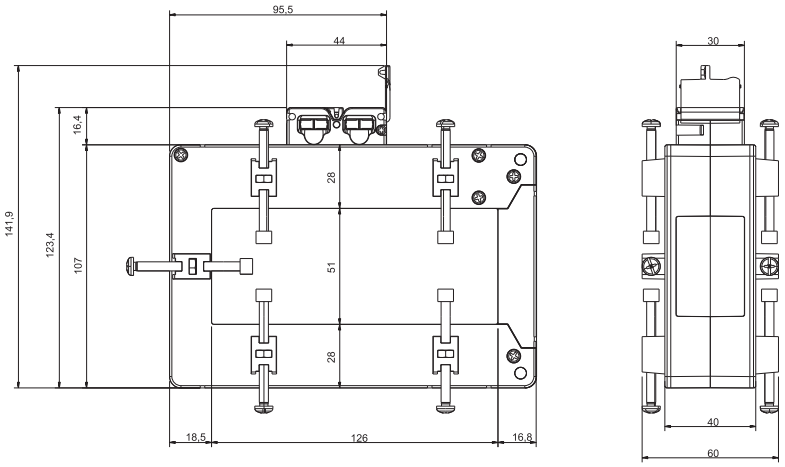

Wiring Diagram

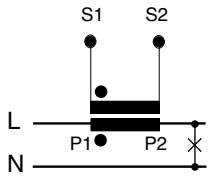

Below is a list of articles with direct links to our shop Electric Automation Network where you can see:

- Quote per purchase volume in real time.
- Online documentation and datasheets of all products.
- Estimated delivery time enquiry in real time.
- Logistics systems for the shipment of materials almost anywhere in the world.
- Purchasing management, order record and tracking of shipments.

To access the product, click on the green button.

Product	Code	Reference	Product link
Selected parameters PRIMARY CURRENT 600...1200A PRIMARY TYPE Solid-core SECONDARY CURRENT 5A Others PRIMARY CURRENT 1200A MAX BUS BAR SIZE 50x125mm MOUTING DIN-rail, Panel, Bus-bar	CTD10H12005AXXX		Buy on EAN