At the end of this document you will find links to products related to this catalog. You can go directly to our shop by clicking HERE. HERE

EMC cable catch rail - KEL-EMV 16-4 - 3063507

Please be informed that the data shown in this PDF Document is generated from our Online Catalog. Please find the complete data in the user's documentation. Our General Terms of Use for Downloads are valid
(http://phoenixcontact.com/download)

EMC cable catch rail

Product Description

The EMC cable catch rails can be used make a direct connection between the shield and the housing without having to cut the cable. Mounting at a later date is possible.

Key Commercial Data

Packing unit	5 STK
GTIN	4 046356 301350

Technical data

General

Product description	The EMC cable catch rails can be used make a direct connection between the shield and the housing without having to cut the cable. Mounting at a later date is possible.
Material	Stainless steel
Installation instructions	1) Fix using mounting screws in sealing frame. 2) Using cable binders, fix the shields of the shielded cables (to do this, partially remove the cable sheath).

Classifications

eCl@ss

eCl@ss 4.0	27081002
eCl@ss 4.1	27081002
eCl@ss 5.0	27081002
eCl@ss 5.1	27081002
eCl@ss 6.0	27081002
eCl@ss 7.0	27081002
eCl@ss 8.0	27149245

ETIM

ETIM 2.0	EC000451

EMC cable catch rail - KEL-EMV 16-4 - 3063507

Classifications

ETIM

ETIM 3.0	EC002317
ETIM 4.0	EC000451
ETIM 5.0	EC002287

UNSPSC

UNSPSC 6.01	30212109
UNSPSC 7.0901	39121708
UNSPSC 11	39121708
UNSPSC 12.01	39121708
UNSPSC 13.2	39121708

Drawings

Dimensional drawing

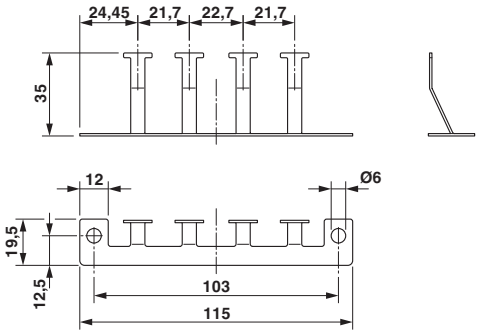

Dimensional drawing

Phoenix Contact 2016 © - all rights reserved
http://www.phoenixcontact.com

PHOENIX CONTACT GmbH & Co. KG
Flachsmarktstr. 8
32825 Blomberg
Germany
Tel. +49 5235 300
Fax +49 5235 3 41200
http://www.phoenixcontact.com

Below is a list of articles with direct links to our shop Electric Automation Network where you can see:

- Quote per purchase volume in real time.
- Online documentation and datasheets of all products.
- Estimated delivery time enquiry in real time.
- Logistics systems for the shipment of materials almost anywhere in the world.
- Purchasing management, order record and tracking of shipments.

To access the product, click on the green button.

Product	Code	Reference	Product link
EMC cable catch rail	3063507	KEL-EMV 16-4	Buy on EAN