At the end of this document you will find links to products related to this catalog. You can go directly to our shop by clicking HERE. HERE

Signal conditioner - MINI MCR-SL-SHUNT-UI-NC - 2810780

Please be informed that the data shown in this PDF Document is generated from our Online Catalog. Please find the complete data in the user's documentation. Our General Terms of Use for Downloads are valid
(http://phoenixcontact.com/download)

MCR 3-way isolating amplifier, with configurable input/output, for electrical isolation and conversion of analog signals in the mV range, single-pos. as well as 2-pos. with screw connection, pre-configured

Why buy this product

- Power supply possible via the foot element (TBUS)
- Ideal for converting signals for shunt measurements
- Low power consumption
- Highly-compact isolating amplifier for electrical isolation, conversion, amplification, and filtering of mV signals to create standard analog signals
- Up to 280 signal combinations can be configured using DIP switches
- 3-way isolation

Key Commercial Data

Packing unit	1 STK
GTIN	4 046356 305341

Technical data

Note

Utilization restriction	EMC: class A product, see manufacturer's declaration in the download area

Dimensions

Width	6.2 mm
Height	93.1 mm
Depth	102.5 mm

Ambient conditions

Ambient temperature (operation)	-20 °C ... 65 °C
Ambient temperature (storage/transport)	-40 °C ... 85 °C

Signal conditioner - MINI MCR-SL-SHUNT-UI-NC - 2810780

Technical data

Ambient conditions

Maximum altitude	≤ 2000 m
Degree of protection	IP20

Input data

Number of inputs	1
Configurable/programmable	Yes, unconfigured
Voltage input signal	-50 mV ... 50 mV
	-60 mV ... 60 mV
	-75 mV ... 75 mV
	-80 mV ... 80 mV
	-100 mV ... 100 mV
	-120 mV ... 120 mV
	-150 mV ... 150 mV
	-200 mV ... 200 mV
	-240 mV ... 240 mV
	-300 mV ... 300 mV
	-500 mV ... 500 mV
	-600 mV ... 600 mV
	-750 mV ... 750 mV
	-800 mV ... 800 mV
	-1 V ... 1 V
	-1.2 V ... 1.2 V
	-1.5 V ... 1.5 V
	-2 V ... 2 V
	-2.4 V ... 2.4 V
	-3 V ... 3 V
	0 mV ... 50 mV
	0 mV ... 60 mV
	0 mV ... 75 mV
	0 mV ... 80 mV
	0 mV ... 100 mV
	0 mV ... 120 mV
	0 mV ... 150 mV
	0 mV ... 200 mV
	0 mV ... 240 mV
	0 mV ... 300 mV
	0 mV ... 500 mV
	0 mV ... 600 mV
	0 mV ... 750 mV
	0 mV ... 800 mV
	0 V ... 1 V

Signal conditioner - MINI MCR-SL-SHUNT-UI-NC - 2810780

Technical data

Input data

	0 V ... 1.2 V
	0 V ... 1.5 V
	0 V ... 2 V
	0 V ... 2.4 V
	0 V ... 3 V
Max. input voltage	approx. 3 V DC
Input resistance of voltage input	approx. 10 kΩ

Output data

Number of outputs	1
Configurable/programmable	Yes, unconfigured
Voltage output signal	0 V ... 10 V
	2 V ... 10 V
	0 V ... 5 V
	1 V ... 5 V
	-10 V ... 10 V (The bi-polar output can be used only for bi-polar input signals.)
	-5 V ... 5 V (The bi-polar output can be used only for bi-polar input signals.)
Current output signal	0 mA ... 0.02 A
	4 mA ... 0.02 A
Load/output load voltage output	≥ 10 kΩ
Load/output load current output	< 500 Ω (at 20 mA)

Power supply

Nominal supply voltage	24 V DC
Supply voltage range	19.2 V DC ... 30 V DC
Max. current consumption	< 25 mA
Power consumption	< 450 mW (Current output)

Connection data

Connection method	Screw connection
Conductor cross section solid min.	0.2 mm²
Conductor cross section solid max.	2.5 mm²
Conductor cross section AWG min.	26
Conductor cross section AWG max.	12
Conductor cross section flexible min.	0.2 mm²
Conductor cross section flexible max.	2.5 mm²
Stripping length	12 mm
Screw thread	M3
Connection method	2-wire

General

No. of channels	1

Signal conditioner - MINI MCR-SL-SHUNT-UI-NC - 2810780

Technical data

General

Maximum transmission error	≤ 0.2 %
	< 0.4 % (Without adjustment)
Maximum temperature coefficient	< 0.01 %/K
Temperature coefficient, typical	< 0.002 %/K
Limit frequency (3 dB)	100 Hz / 30 Hz switchable
Step response (10-90%)	3.5 ms (At 100 Hz)
Electrical isolation	Basic insulation according to EN 61010
Overvoltage category	II
Degree of pollution	2
Rated insulation voltage	50 V AC/DC
Test voltage, input/output/supply	1.5 kV (50 Hz, 1 min.)
Electromagnetic compatibility	Conformance with EMC Directive 2004/108/EC
Noise emission	EN 61000-6-4
Noise immunity	EN 61000-6-2 When being exposed to interference, there may be minimal deviations.
Color	green
Housing material	PBT
Mounting position	any
Assembly instructions	The T connector can be used to bridge the supply voltage. It can be snapped onto a 35 mm DIN rail according to EN 60715.
Conformance	CE-compliant
ATEX	# II 3 G Ex nA IIC T4 Gc X
UL, USA / Canada	UL 508 Recognized
	Class I, Div. 2, Groups A, B, C, D T5 applied for
GL	GL EMC 2 D

EMC data

Designation	Electromagnetic RF field
Standards/regulations	EN 61000-4-3
Typical deviation from the measuring range final value	6 %
Designation	Fast transients (burst)
Standards/regulations	EN 61000-4-4
Typical deviation from the measuring range final value	6 %
Designation	Conducted interferences
Standards/regulations	EN 61000-4-6
Typical deviation from the measuring range final value	6 %

Standards and Regulations

Electromagnetic compatibility	Conformance with EMC Directive 2004/108/EC
Noise emission	EN 61000-6-4
Connection in acc. with standard	CUL
Designation	Electromagnetic RF field

Signal conditioner - MINI MCR-SL-SHUNT-UI-NC - 2810780

Technical data

Standards and Regulations

Standards/regulations	EN 61000-4-3
	EN 61000-4-4
Designation	Conducted interferences
Standards/regulations	EN 61000-4-6
Electrical isolation	Basic insulation according to EN 61010
Conformance	CE-compliant
ATEX	# II 3 G Ex nA IIC T4 Gc X
UL, USA / Canada	UL 508 Recognized
	Class I, Div. 2, Groups A, B, C, D T5 applied for
GL	GL EMC 2 D

Classifications

eCl@ss

eCl@ss 4.0	27210120
eCl@ss 4.1	27210120
eCl@ss 5.0	27210120
eCl@ss 5.1	27210120
eCl@ss 6.0	27210120
eCl@ss 7.0	27210120
eCl@ss 8.0	27210120

ETIM

ETIM 2.0	EC001485
ETIM 3.0	EC001485
ETIM 4.0	EC001485
ETIM 5.0	EC002653

UNSPSC

UNSPSC 6.01	30211506
UNSPSC 7.0901	39121008
UNSPSC 11	39121008
UNSPSC 12.01	39121008
UNSPSC 13.2	39121008

Approvals

Approvals

Approvals

UL Recognized / cUL Recognized / GL / EAC / cULus Recognized

Signal conditioner - MINI MCR-SL-SHUNT-UI-NC - 2810780

Approvals

Ex Approvals

ATEX

Approvals submitted

Approval details

UL Recognized

cUL Recognized

GL

EAC

cULus Recognized

Drawings

Application drawing

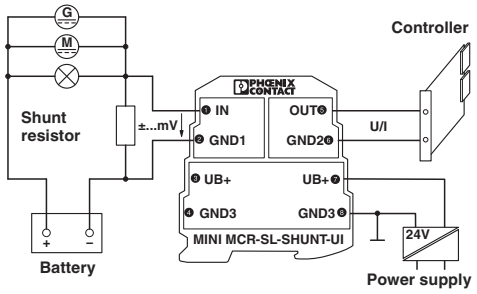

Block diagram

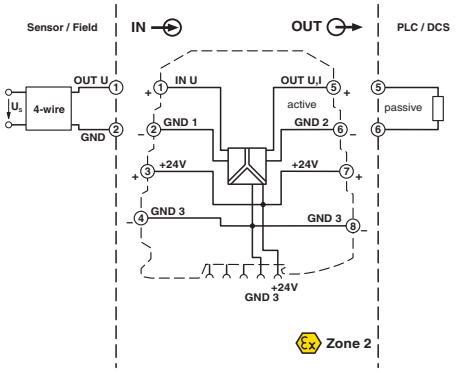

Monitoring of loading and unloading currents

Signal conditioner - MINI MCR-SL-SHUNT-UI-NC - 2810780

Dimensional drawing

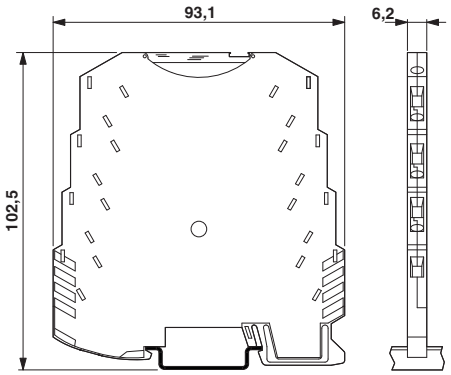

Phoenix Contact 2016 © - all rights reserved
http://www.phoenixcontact.com

PHOENIX CONTACT GmbH & Co. KG
Flachsmarktstr. 8
32825 Blomberg
Germany
Tel. +49 5235 300
Fax +49 5235 3 41200
http://www.phoenixcontact.com

Below is a list of articles with direct links to our shop Electric Automation Network where you can see:

- Quote per purchase volume in real time.
- Online documentation and datasheets of all products.
- Estimated delivery time enquiry in real time.
- Logistics systems for the shipment of materials almost anywhere in the world.
- Purchasing management, order record and tracking of shipments.

To access the product, click on the green button.

Product	Code	Reference	Product link
MCR 3-way isolating amplifier, with configurable input/ output, for electrical isolation and conversion of analog signals in the mV range, single-pos. as well as 2-pos. with screw connection, pre-configured	2810780	MINI MCR-SL-SHUNT-UI-NC	Buy on EAN