At the end of this document you will find links to products related to this catalog. You can go directly to our shop by clicking HERE. HERE

Lightning/surge arrester type 1/2 - VAL-MS-T1/T2 600DC-PV/2+V - 2801163

Please be informed that the data shown in this PDF Document is generated from our Online Catalog. Please find the complete data in the user's documentation. Our General Terms of Use for Downloads are valid (http://phoenixcontact.com/download)

Lightning/surge arrester for 2-pos. isolated 600 V DC voltage systems, for DIN rail mounting, 3-pos. base element, three plug-in temperature-monitored protective elements, status message on each plug.

Why buy this product

- Increased safety, thanks to compliance with standard EN 50539-11
- Reliable contact, thanks to integrated rotating latch
- Easy replacement, thanks to plug-in arresters
- Optimum inverter protection, thanks to low protection level
- Efficient replacement of defective plugs, thanks to visual status indicator
- Protection against mismatching, thanks to keyed plugs and base elements
- Always the right arrester, thanks to universal type 1/type 2 protective components

Key Commercial Data

Packing unit	1 STK
GTIN	4 046356 714303

Technical data

Dimensions

Height	90 mm
Width	53.4 mm
Depth	65.5 mm
Horizontal pitch	3 Div.

Ambient conditions

Degree of protection	IP20 (only when all terminal points are used)
Ambient temperature (operation)	-40 °C ... 80 °C

Lightning/surge arrester type 1/2 - VAL-MS-T1/T2 600DC-PV/2+V - 2801163

Technical data

Ambient conditions

Ambient temperature (storage/transport)	-40 °C ... 80 °C
Altitude	≤ 2000 m (amsl (above mean sea level))
Permissible humidity (operation)	5 % ... 95 %
Shock (operation)	60g (Half sine/11 ms/3x #X#Y#Z)
Vibration (operation)	7.5g (5-500 Hz/2.5 h/XYZ)

General

Standards/specifications	EN 50539-11 2013
IEC test classification	PV T1
	PV T2
	T1
	I
EN type	T1
Number of ports	One
SPD failure behavior	OCM (Open-circuit mode)
Connection configuration	Y configuration
SPD design	Combination type
Installation location	Inside
Accessibility	Accessible
Installation location of the disconnect device	Internal
Mode of protection	(L+) - (L-)
	(L+) - PE
	(L-) - PE
Mounting type	DIN rail: 35 mm
Color	jet black RAL 9005
Housing material	PA 6.6-FR
	PBT-FR
Degree of pollution	2
Distance between live and grounded parts	8 mm
Flammability rating according to UL 94	V-0
Type	DIN rail module, two-section, divisible
Surge protection fault message	optical

Additional descriptions

Note	The device is intended for touch proof installation in a housing. Ensure that there is a gap of at least 8 mm between the active and grounded parts in the connection area.

Protective circuit DC voltage side (DC)

Maximum continuous operating voltage U_{CPV}	720 V DC
Open circuit voltage U_{OCSTC}	≤ 600 V DC

Lightning/surge arrester type 1/2 - VAL-MS-T1/T2 600DC-PV/2+V - 2801163

Technical data

Protective circuit DC voltage side (DC)

Short-circuit current rating I_{SCPV}	1000 A
Continuous operating current I_{CPV}	< 20 µA
Rated load current I_L	80 A
Residual current I_{PE}	≤ 20 µA DC
	≤ 350 µA AC
Standby power consumption P_C	≤ 25 mVA
Nominal discharge current (8/20) µs	15 kA
Maximum discharge current I_{max} (8/20) µs	40 kA
Impulse discharge current (10/350)#µs, charge	2.5 As
Impulse discharge current (10/350)#µs, specific energy	6.25 kJ/Ω
Impulse discharge current (10/350) µs, peak value I_{imp}	5 kA
Total discharge current I_{Total} (8/20) µs	40 kA
Total discharge current I_{Total} (10/350) µs	7 kA
Voltage protection level U_p	≤ 2.6 kV
Residual voltage U_{res}	≤ 2.6 kV (at I_n)
	≤ 2 kV (at 5 kA)
	≤ 2.3 kV (at 10 kA)
	≤ 2.8 kV (at 20 kA)
	≤ 3.1 kV (at 30 kA)
	≤ 3.6 kV (at 40 kA)
Residual voltage U_{res} (L+) - PE	≤ 2.6 kV (at I_n)
	≤ 2 kV (at 5 kA)
	≤ 2.3 kV (at 10 kA)
	≤ 2.8 kV (at 20 kA)
	≤ 3.1 kV (at 30 kA)
	≤ 3.6 kV (at 40 kA)
Residual voltage U_{res} (L-) - PE	≤ 2.6 kV (at I_n)
	≤ 2 kV (at 5 kA)
	≤ 2.3 kV (at 10 kA)
	≤ 2.8 kV (at 20 kA)
	≤ 3.1 kV (at 30 kA)
	≤ 3.6 kV (at 40 kA)
Response time t_A	≤ 25 ns
Insulation resistance R_{iso}	> 5 GΩ (at 500 V DC)

Connection data

Connection method	Screw connection
Conductor cross section flexible	1.5 mm² ... 25 mm²
Conductor cross section solid	1.5 mm² ... 35 mm²

Lightning/surge arrester type 1/2 - VAL-MS-T1/T2 600DC-PV/2+V - 2801163

Technical data

Connection data

Conductor cross section AWG	15 ... 2
Screw thread	M5
Tightening torque	4.5 Nm
Stripping length	16 mm
Connection method	Biconnect terminal blocks
Conductor cross section flexible	1.5 mm² ... 16 mm²
Screw thread	M5

UL specifications

SPD Type	4CA
Maximum continuous operating voltage MCOV (L+) - (L-)	720 V DC
Maximum continuous operating voltage MCOV (L+) - G	720 V DC
Maximum continuous operating voltage MCOV (L-) - G	720 V DC
Nominal voltage	600 V DC
Mode of protection	(L+) - (L-)
	(L+) - G
	(L-) - G
Power distribution system	1
Measured limiting voltage MLV (L+) - (L-)	2990 V
Measured limiting voltage MLV (L+) - G	2870 V
Measured limiting voltage MLV (L-) - G	2950 V
Nominal discharge current I_n (L+) - (L-)	20 kA
Nominal discharge current I_n (L+) - G	20 kA
Nominal discharge current I_n (L-) - G	20 kA

UL connection data

Conductor cross section AWG	10 ... 2
Tightening torque	30 lb_f-in.

Classifications

eCl@ss

eCl@ss 4.0	27140201
eCl@ss 4.1	27130801
eCl@ss 5.0	27130801
eCl@ss 5.1	27130801
eCl@ss 6.0	27130802
eCl@ss 7.0	27130802
eCl@ss 8.0	27130802
eCl@ss 9.0	27130802

Lightning/surge arrester type 1/2 - VAL-MS-T1/T2 600DC-PV/2+V - 2801163

Classifications

ETIM

ETIM 3.0	EC000941
ETIM 4.0	EC000381
ETIM 5.0	EC000381

UNSPSC

UNSPSC 6.01	30212010
UNSPSC 7.0901	39121610
UNSPSC 11	39121610
UNSPSC 12.01	39121610
UNSPSC 13.2	39121620

Approvals

Approvals

Approvals

UL Recognized / KEMA-KEUR / cUL Recognized / EAC / cULus Recognized

Ex Approvals

Approvals submitted

Approval details

UL Recognized

KEMA-KEUR

cUL Recognized

EAC

Lightning/surge arrester type 1/2 - VAL-MS-T1/T2 600DC-PV/2+V - 2801163

Approvals

cULus Recognized

Drawings

Dimensional drawing

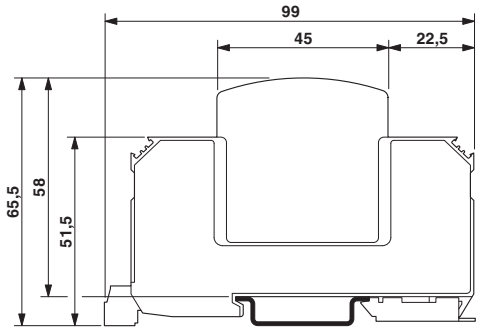

Circuit diagram

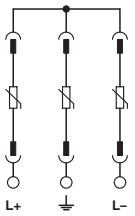

The illustration shows the dimensional drawing for a version with remote indicator contact

Phoenix Contact 2016 © - all rights reserved
http://www.phoenixcontact.com

PHOENIX CONTACT GmbH & Co. KG
Flachsmarktstr. 8
32825 Blomberg
Germany
Tel. +49 5235 300
Fax +49 5235 3 41200
http://www.phoenixcontact.com

Below is a list of articles with direct links to our shop Electric Automation Network where you can see:

- Quote per purchase volume in real time.
- Online documentation and datasheets of all products.
- Estimated delivery time enquiry in real time.
- Logistics systems for the shipment of materials almost anywhere in the world.
- Purchasing management, order record and tracking of shipments.

To access the product, click on the green button.

Product	Code	Reference	Product link
Lightning/surge arrester for 2-pos. isolated 600 V DC voltage systems, for DIN rail mounting, 3-pos. base element, three plug-in temperature-monitored protective elements, status message on each plug.	2801163	VAL-MS-T1/T2 600DC-PV/2+V	Buy on EAN