At the end of this document you will find links to products related to this catalog. You can go directly to our shop by clicking HERE. HERE

Cable - VIP-CAB-FLK40/0,14/1,0M - 2318790

Please be informed that the data shown in this PDF Document is generated from our Online Catalog. Please find the complete data in the user's documentation. Our General Terms of Use for Downloads are valid
(http://phoenixcontact.com/download)

Assembled round cable with two molded 40-pos. socket strips (1:1 connection). The cable has a 90° punched on connector and a 180° punched on connector, cable length: 1 m

The figure shows the 50-pos. product version

Why buy this product

- Available in any choice of length
- 26 to 50-pos.
- Individual serial number
- Connector according to IEC 60603-13
- 1:1 connection

Key Commercial Data

Packing unit	1 STK
GTIN	4 046356 312257

Technical data

General

Nominal voltage U_N	< 50 V AC
	60 V DC
Max. current carrying capacity per path	1 A
Max. conductor resistance	0.16 Ω/m
Length of cable	1 m
Single wire, cross section	0.14 mm²
Single wire, cross section [AWG]	26
Conductor construction: Number of litz wires:	7
Single wire, material	Cu tin-plated
External diameter	9.9 mm
Cable, preassembly	Insulation displacement, IEC 60352-4/DIN EN 60352-4
Shielding	no
Outer sheath, material	PVC
External sheath, color	gray RAL 7035

Cable - VIP-CAB-FLK40/0,14/1,0M - 2318790

Technical data

Environmental conditions

Ambient temperature (operation)	-20 °C ... 50 °C
Ambient temperature (storage/transport)	-20 °C ... 70 °C
Flame resistance	IEC 60332-1
	DIN VDE 0482 Part 332-1
Resistance to oil	UL 1581
Gasoline resistance	Against occasional splashes

Connector, module side

Connection method	IDC/FLK socket strip (2.54 mm)
Number of connections	1
Number of positions	40

Connector, controller side

Connection method	IDC/FLK socket strip (2.54 mm)
Number of connections	1
Number of positions	40

Standards and Regulations

Resistance to oil	UL 1581
Connection in acc. with standard	CUL
Flame resistance	IEC 60332-1
	DIN VDE 0482 Part 332-1

Classifications

eCl@ss

eCl@ss 4.0	27060306
eCl@ss 4.1	27060306
eCl@ss 5.0	27061801
eCl@ss 5.1	27061801
eCl@ss 6.0	27061801
eCl@ss 7.0	27061801
eCl@ss 8.0	27249205

ETIM

ETIM 2.0	EC000237
ETIM 3.0	EC000237
ETIM 4.0	EC000237
ETIM 5.0	EC000237

UNSPSC

UNSPSC 6.01	26121620
UNSPSC 7.0901	26121620

Cable - VIP-CAB-FLK40/0,14/1,0M - 2318790

Classifications

UNSPSC

UNSPSC 11	26121620
UNSPSC 12.01	26121620
UNSPSC 13.2	26121620

Approvals

Approvals

Approvals

UL Recognized / cUL Recognized / EAC / cULus Recognized

Ex Approvals

Approvals submitted

Approval details

UL Recognized

cUL Recognized

EAC

cULus Recognized

Drawings

Cable - VIP-CAB-FLK40/0,14/1,0M - 2318790

Dimensional drawing

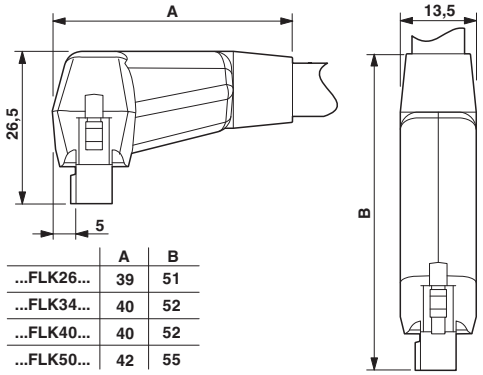

	A	B
...FLK26...	39	51
...FLK34...	40	52
...FLK40...	40	52
...FLK50...	42	55

Phoenix Contact 2016 © - all rights reserved
http://www.phoenixcontact.com

PHOENIX CONTACT GmbH & Co. KG
Flachsmarktstr. 8
32825 Blomberg
Germany
Tel. +49 5235 300
Fax +49 5235 3 41200
http://www.phoenixcontact.com

Below is a list of articles with direct links to our shop Electric Automation Network where you can see:

- Quote per purchase volume in real time.
- Online documentation and datasheets of all products.
- Estimated delivery time enquiry in real time.
- Logistics systems for the shipment of materials almost anywhere in the world.
- Purchasing management, order record and tracking of shipments.

To access the product, click on the green button.

Product	Code	Reference	Product link
Assembled round cable with two molded 40-pos. socket strips (1:1 connection). The cable has a 90° punched on connector and a 180° punched on connector, cable length: 1 m	2318790	VIP-CAB-FLK40/0,14/1,0M	Buy on EAN