At the end of this document you will find links to products related to this catalog. You can go directly to our shop by clicking HERE. HERE

Pin strip - PST 1,3/ 2-5,0 R24 - 1720301

Please be informed that the data shown in this PDF Document is generated from our Online Catalog. Please find the complete data in the user's documentation. Our General Terms of Use for Downloads are valid
(http://phoenixcontact.com/download)

Header, Nominal current: 12 A, Rated voltage (III/2): 320 V, Number of positions: 2, Pitch: 5 mm, Color: black, Contact surface: Tin, Mounting: THR soldering, The maximum current depends on the plug used. The lower of the two current values apply for plug and pin strip. The pin strip is made of highly temperature resistant plastic and is thus suitable for the reflow process.

Why buy this product

- Optimum pin geometry so as to not damage the plug
- Reflow solderable pin strip, optimized for COMBICON compact connectors
- Supplied in tape-on-reel packing according to IEC 60286-3 for automated mounting

Key Commercial Data

Packing unit	330 STK
Minimum order quantity	330 STK
GTIN	4 046356 115919

Technical data

Dimensions

Length	2.8 mm
Pitch	5.00 mm
Dimension a	5 mm
Constructional height	9.5 mm
Length of the solder pin	3.5 mm
Pin dimensions	1,3 mm
Hole diameter	1.6 mm

General

Range of articles	PST 1,3/..-V
Insulating material group	IIIa
Rated surge voltage (III/3)	4 kV
Rated surge voltage (III/2)	4 kV
Rated surge voltage (II/2)	4 kV
Rated voltage (III/3)	250 V
Rated voltage (III/2)	320 V
Rated voltage (II/2)	400 V

Pin strip - PST 1,3/ 2-5,0 R24 - 1720301

Technical data

General

Connection in acc. with standard	EN-VDE
Nominal current I_N	12 A (depends on the plug used)
Maximum load current	12 A (depends on the plug used)
Insulating material	PA
Flammability rating according to UL 94	V0
Color	black
Number of positions	2

Standards and Regulations

Connection in acc. with standard	EN-VDE
	CSA
Flammability rating according to UL 94	V0

Classifications

eCl@ss

eCl@ss 4.0	272607xx
eCl@ss 4.1	27260701
eCl@ss 5.0	27260701
eCl@ss 5.1	27260701
eCl@ss 6.0	27260704
eCl@ss 7.0	27440402
eCl@ss 8.0	27440402
eCl@ss 9.0	27440402

ETIM

ETIM 3.0	EC001121
ETIM 4.0	EC002637
ETIM 5.0	EC002637

UNSPSC

UNSPSC 6.01	30211801
UNSPSC 7.0901	39121432
UNSPSC 11	34131203
UNSPSC 12.01	39121432
UNSPSC 13.2	39121432

Approvals

Approvals

Pin strip - PST 1,3/ 2-5,0 R24 - 1720301

Approvals

Approvals

CSA / UL Recognized / SEV / cUL Recognized / EAC / cULus Recognized

Ex Approvals

Approvals submitted

Approval details

CSA

	B	D
Nominal current IN	5 A	5 A
Nominal voltage UN	300 V	300 V

UL Recognized

	B	D
Nominal current IN	16 A	10 A
Nominal voltage UN	300 V	300 V

SEV

Nominal current IN	10 A
Nominal voltage UN	250 V

cUL Recognized

	B	D
Nominal current IN	16 A	10 A
Nominal voltage UN	300 V	300 V

EAC

Pin strip - PST 1,3/ 2-5,0 R24 - 1720301

Approvals

cULus Recognized

Drawings

Drilling diagram

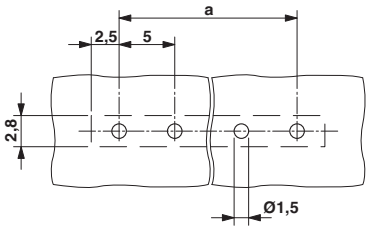

Dimensional drawing

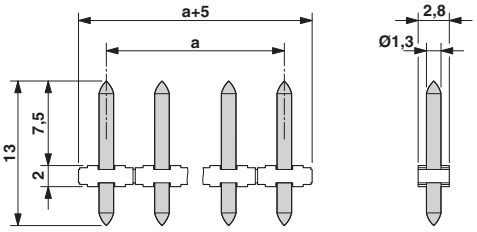

Dimensional drawing

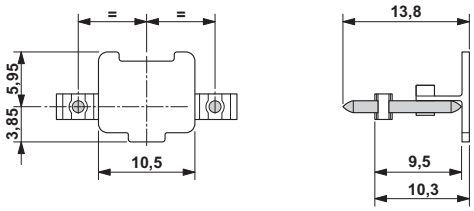

Pad position for PST 1,3/...5,0 R...

Dimensional drawing

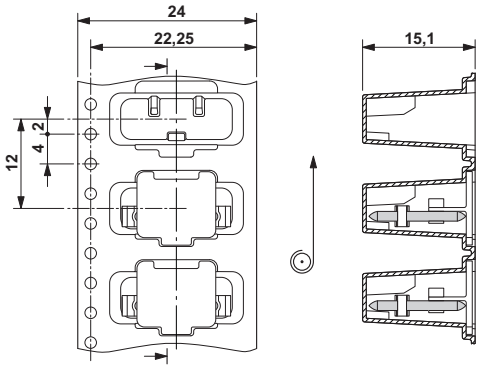

Phoenix Contact 2016 © - all rights reserved
http://www.phoenixcontact.com

PHOENIX CONTACT GmbH & Co. KG
Flachsmarktstr. 8
32825 Blomberg
Germany
Tel. +49 5235 300
Fax +49 5235 3 41200
http://www.phoenixcontact.com

Below is a list of articles with direct links to our shop Electric Automation Network where you can see:

- Quote per purchase volume in real time.
- Online documentation and datasheets of all products.
- Estimated delivery time enquiry in real time.
- Logistics systems for the shipment of materials almost anywhere in the world.
- Purchasing management, order record and tracking of shipments.

To access the product, click on the green button.

Product	Code	Reference	Product link
Header, Nominal current: 12 A, Rated voltage (III/2): 320 V, Number of positions: 2, Pitch: 5 mm, Color: black, Contact surface: Tin, Mounting: Taped SMD/THT/THR components, The maximum current depends on the plug used. The lower of the two current values apply for plug and pin strip. The pin strip is made of highly temperature resistant plastic and is thus suitable for the reflow process.	1720301	PST 1,3/ 2-5,0 R24	Buy on EAN