At the end of this document you will find links to products related to this catalog. You can go directly to our shop by clicking HERE. HERE

Connector in molded plastic on both sides - K-8E-M23MK/ 5,0-H00/ M23FK-C5-S - 1622251

Please be informed that the data shown in this PDF Document is generated from our Online Catalog. Please find the complete data in the user's documentation. Our General Terms of Use for Downloads are valid
(http://phoenixcontact.com/download)

Connector in molded plastic on both sides, Length: 5 m, Color of outer sheath: orange RAL 2003

Why buy this product

- Transmission of signals, data, and power in just a single connector
- CAT5 data interface
- Kundenspezifische Konfektionen und Leitungslängen lieferbar

Key Commercial Data

Packing unit	1 STK
Minimum order quantity	2 STK
GTIN	4 055626 070070

Technical data

Conductor length	5 m
Nominal current	26 A

Connector specifications

Type	Angled, can be turned, plastic-coated
Housing material	PUR
Thread type	M23
Locking type	SPEEDCON locking
Degree of protection	IP67, when in locked state
	IP68, when in locked state
Number of positions	4+4+4+PE
Direction of rotation	Standard
Type of contact	Socket
Insertion/withdrawal cycles	100
Max. current	30 A
Voltage	630 V AC
Overvoltage category	III

Connector in molded plastic on both sides - K-8E-M23MK/ 5,0-H00/ M23FK-C5-S - 1622251

Technical data

Connector specifications

Degree of pollution	3
Rated surge voltage	6 kV

Cable specifications

Type of cable	HDSL11Y
Signal type	CAT5
Transmission speed	100 Mbps (Data interface)
Shielded	yes
Cable structure	(5x 2.5 + 4x 0.34/C + 4x 0.5) C
Cable structure (AWG)	(14 AWG/ 5 + 22 AWG/ 4c + 20 AWG) C
External cable diameter	14.6 mm ±0.4 mm
Outer sheath, material	PUR
Material wire insulation	TPM (TPM/TPM/polyolefin)
External sheath, color	orange RAL 2003
Single wire, color	Black 1, black 2, black 3, black 4, green/yellow (Power wires)
	brown, violet, black, green (Signal wires)
	blue, yellow, white, orange (Data wires)
Nominal voltage, cable	1000 V (300 V signal)
Test voltage	4 kV (1.5 kV signal)
Rated current	26 A (Power, according to DIN VDE 0298-4 tab. 11/5)
	8 A (Signal, according to DIN VDE 0298-4 tab. 11/5)
	3.6 A (Data, according to DIN VDE 0298-4 tab. 11/5)
Smallest bending radius, fixed installation	73 mm
Smallest bending radius, movable installation	148 mm
Number of bending cycles	1000000
Traversing path	6 m
Acceleration	2.5 m/s²
Ambient temperature for fixed installation	-40 °C ... 80 °C
Ambient temperature for flexible installation	-30 °C ... 60 °C
Special properties	Flexible cable conduit capable
Flame resistance	IEC 60332-1-2
Halogen-free	According to EN 50267-2-1
Resistance to oil	EN 60811-2-1

Connector specifications (second page)

Type	Angled, can be turned, plastic-coated
Housing material	PUR
Thread type	M23
Locking type	SPEEDCON locking
Degree of protection	IP67, when in locked state

Connector in molded plastic on both sides - K-8E-M23MK/ 5,0-H00/ M23FK-C5-S - 1622251

Technical data

Connector specifications (second page)

	IP68, when in locked state
Number of positions	4+4+4+PE
Direction of rotation	Standard
Type of contact	Male connector
Insertion/withdrawal cycles	100
Max. current	30 A
Voltage	630 V AC
Overvoltage category	III
Degree of pollution	3
Rated surge voltage	6 kV

Classifications

eCl@ss

eCl@ss 5.1	27260702
eCl@ss 8.0	27440102

ETIM

ETIM 4.0	EC002635
ETIM 5.0	EC002635

Approvals

Approvals

Approvals

UL Listed / cUL Listed

Ex Approvals

Approvals submitted

Approval details

UL Listed	
Nominal current IN	16 A

Connector in molded plastic on both sides - K-8E-M23MK/ 5,0-H00/ M23FK-C5-S - 1622251

Approvals

Nominal voltage UN	600 V

cUL Listed	
Nominal current IN	16 A
Nominal voltage UN	600 V

Drawings

Schematic diagram

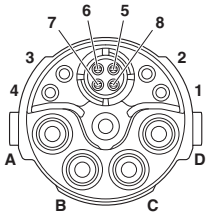

Socket pin assignment

Schematic diagram

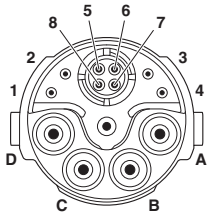

Pin assignment of pin

Schematic diagram

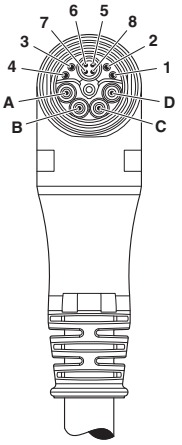

Cable outlet direction

Schematic diagram

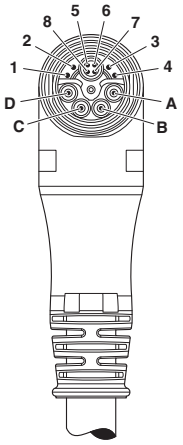

Cable outlet direction

Connector in molded plastic on both sides - K-8E-M23MK/ 5,0-H00/ M23FK-C5-S - 1622251

Cable cross section

Dimensional drawing

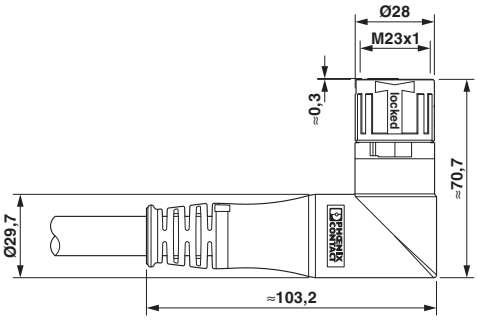

Socket side, dimension A = 0 mm

Dimensional drawing

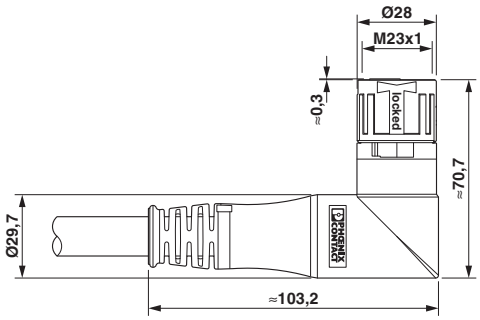

Pin side; dimension A = ~ 0.3 mm

Circuit diagram

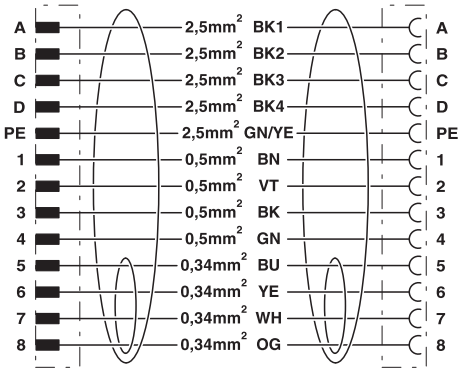

Contact assignment of M23 plugs/sockets

Phoenix Contact 2016 © - all rights reserved
http://www.phoenixcontact.com

PHOENIX CONTACT GmbH & Co. KG
Flachsmarktstr. 8
32825 Blomberg
Germany
Tel. +49 5235 300
Fax +49 5235 3 41200
http://www.phoenixcontact.com

Below is a list of articles with direct links to our shop Electric Automation Network where you can see:

- Quote per purchase volume in real time.
- Online documentation and datasheets of all products.
- Estimated delivery time enquiry in real time.
- Logistics systems for the shipment of materials almost anywhere in the world.
- Purchasing management, order record and tracking of shipments.

To access the product, click on the green button.

Product	Code	Reference	Product link
Connector in molded plastic on both sides, Length: 5 m, Color of outer sheath: orange RAL 2003	1622251	K-8E-M23MK/5,0-H00/M23FK-C5-S	Buy on EAN