At the end of this document you will find links to products related to this catalog. You can go directly to our shop by clicking HERE. HERE

Connector set - DC-B 6-SET-CO-M25-M-7X4-UT - 1602287

Please be informed that the data shown in this PDF Document is generated from our Online Catalog. Please find the complete data in the user's documentation. Our General Terms of Use for Downloads are valid
(http://phoenixcontact.com/download)

Duplicon, aluminum coupling set with a basic housing (enclosed bottom), with two stackable housings with M25 cable screw connection threads (without cable screw connections), with two contact inserts 6 x 4 mm² + PE, 400/690 V, 25 A, screw connection and a housing cover, type B6, IP67 protection

Key Commercial Data

Packing unit	1 STK
GTIN	4 046356 027984

Technical data

Dimensions

Height	115 mm

Ambient conditions

Degree of protection	IP65/IP66/IP67
Ambient temperature (operation)	-40 °C ... 100 °C

Electrical characteristics

Rated voltage (III/3)	400 V (L-PE)
	690 V (L-L)
Rated surge voltage	6 kV
Rated current	25 A (with 4 mm² conductor cross section)
Maximum load current	32 A (L1/L2/L3)
Overvoltage category	III
Degree of pollution	3

Material data

Contact material	Cu
Contact surface material	Ag
Contact carrier material	PA
Housing material	Aluminum die-cast
Housing surface material	EMC-conductive
Seal material	NBR
Locking latch material	Stainless steel
Material grip body interlock	PA

Connector set - DC-B 6-SET-CO-M25-M-7X4-UT - 1602287

Technical data

General

Type	DC-B6
Color	pearl gray
Insertion/withdrawal cycles	≥ 100
Number of positions	6
Stripping length of the individual wire	10 mm
Conductor cross section	0.2 mm² ... 4 mm² (6 mm² without ferrule)
Connection cross section AWG	24 ... 12 (AWG 10 without ferrule)
Tightening torque	0.5 Nm ... 0.6 Nm
Pg screw connection	none
Type of the screw connection	with M25 thread
Cable exit	Lateral

Standards and Regulations

Connection in acc. with standard	CUL
Flammability rating according to UL 94	V0

Classifications

eCl@ss

eCl@ss 4.0	27140816
eCl@ss 4.1	27140816
eCl@ss 5.0	27143424
eCl@ss 5.1	27143424
eCl@ss 6.0	27143424
eCl@ss 7.0	27440209
eCl@ss 8.0	27440202
eCl@ss 9.0	27440202

ETIM

ETIM 2.0	EC001121
ETIM 3.0	EC000437
ETIM 4.0	EC000437
ETIM 5.0	EC000437

UNSPSC

UNSPSC 6.01	30211923
UNSPSC 7.0901	39121522
UNSPSC 11	39121522
UNSPSC 12.01	39121522
UNSPSC 13.2	39121522

Connector set - DC-B 6-SET-CO-M25-M-7X4-UT - 1602287

Approvals

Approvals

Approvals

UL Recognized / VDE Gutachten mit Fertigungsüberwachung / cUL Recognized / EAC / cULus Recognized

Ex Approvals

Approvals submitted

Approval details

UL Recognized

mm²/AWG/kcmil	12
Nominal current IN	25 A
Nominal voltage UN	600 V

VDE Gutachten mit Fertigungsüberwachung

Nominal current IN	25 A
Nominal voltage UN	690 V

cUL Recognized

mm²/AWG/kcmil	12
Nominal current IN	25 A
Nominal voltage UN	600 V

EAC

cULus Recognized

Connector set - DC-B 6-SET-CO-M25-M-7X4-UT - 1602287

Drawings

Diagram

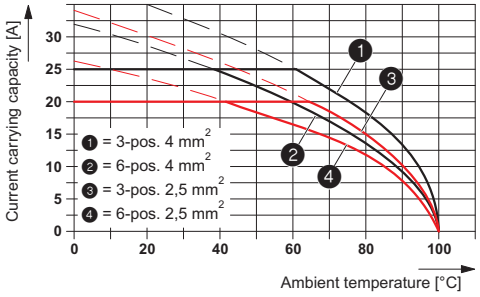

Dimensional drawing

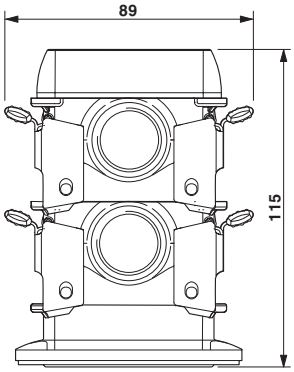

Dimensional drawing

Dimensional drawing

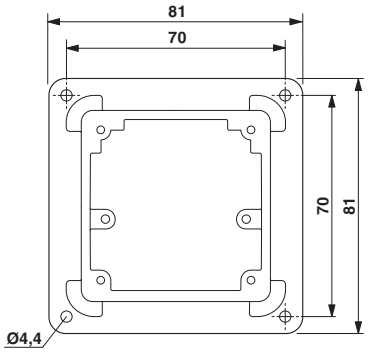

Dimensional drawing

Phoenix Contact 2016 © - all rights reserved
http://www.phoenixcontact.com

PHOENIX CONTACT GmbH & Co. KG
Flachsmarktstr. 8
32825 Blomberg
Germany
Tel. +49 5235 300
Fax +49 5235 3 41200
http://www.phoenixcontact.com

Below is a list of articles with direct links to our shop Electric Automation Network where you can see:

- Quote per purchase volume in real time.
- Online documentation and datasheets of all products.
- Estimated delivery time enquiry in real time.
- Logistics systems for the shipment of materials almost anywhere in the world.
- Purchasing management, order record and tracking of shipments.

To access the product, click on the green button.

Product	Code	Reference	Product link
Duplicon, aluminum coupling set with a basic housing (enclosed bottom), with two stackable housings with M25 cable screw connection threads (without cable screw connections), with two contact inserts 6 x 4 mm² + PE, 400/690 V, 25 A, screw connection and a housing cover, type B6, IP67 protection	1602287	DC-B 6-SET-CO-M25-M-7X4-UT	Buy on EAN