At the end of this document you will find links to products related to this catalog. You can go directly to our shop by clicking HERE. HERE

Bus system cable - SAC-5P-MINMS/ 1,0-928/MINFR DN - 1417838

Please be informed that the data shown in this PDF Document is generated from our Online Catalog. Please find the complete data in the user's documentation. Our General Terms of Use for Downloads are valid
(http://phoenixcontact.com/download)

Bus system cable, DeviceNet™, 5-position, PVC, gray RAL 7001, shielded, Plug straight 7/8"-16UNF, on Socket angled 7/8"-16UNF, Cable length: 1 m, Connector, unshielded

DeviceNet

Key Commercial Data

Packing unit	1 STK
GTIN	4 046356 540155

Technical data

Dimensions

Length of cable	1 m

Ambient conditions

Ambient temperature (operation)	-40 °C ... 80 °C (Plug / socket)
Degree of protection	IP65
	IP67

General

Rated current at 40°C	5.2 A
Rated voltage	30 V
Number of positions	5
Coding	A - standard
Signal type/category	DeviceNet™
Status display	No
Overvoltage category	II
Degree of pollution	3
Torque	0.8 Nm (7/8" connectors)

Material

Flammability rating according to UL 94	HB
Contact material	CuZn
Contact surface material	Au
Contact carrier material	PA 66

Bus system cable - SAC-5P-MINMS/ 1,0-928/MINFR DN - 1417838

Technical data

Material

Material of grip body	TPU
Material, knurls	High-grade steel
Sealing material	TPU

Pin assignment

Position = wire color (signal) = position (optional)	1 (Plug) = SR (shield) = 1 (Socket)
	2 (Plug) = RD (V+) = 2 (Socket)
	3 (Plug) = BK (V-) = 3 (Socket)
	4 (Plug) = WH (CAN_H) = 4 (Socket)
	5 (Plug) = BU (CAN_L) = 5 (Socket)

Standards and Regulations

Flammability rating according to UL 94	HB

Cable

Cable type	DeviceNet trunk cable
Cable type (abbreviation)	928
UL AWM style	20201 (60°C / 600 V)
Cable structure	2xAWG18 (Signal) + 2xAWG15 (Power)
Conductor cross section	2x 1 mm² (Data pair)
	2x 1.7 mm² (Power supply)
	1x 1 mm² (Drain wire)
AWG signal line	18
AWG power supply	15
Conductor structure signal line	19x 0.26 mm
Conductor structure, voltage supply	19x 0.34 mm
Core diameter including insulation	approx. 3.8 mm (Data pair)
	approx. 2.7 mm (Power supply)
Wire colors	Red-black, blue-white
Twisted pairs	2 cores to the pair
Type of pair shielding	Plastic-coated aluminum foil, aluminum side outside
Overall twist	2 pairs and one drain wire to the core
Shielding	Tinned copper braided shield
Optical shield covering	70 %
External sheath, color	gray RAL 7001
External cable diameter D	12.2 mm ±0,3 mm
Minimum bending radius, fixed installation	5 x D
Outer sheath, material	PVC
Material conductor insulation	Foamed PE (Data pair)
	PVC (Power supply)
Conductor material	Tin-plated Cu litz wires
Insulation resistance	> 5 GΩ*km

Bus system cable - SAC-5P-MINMS/ 1,0-928/MINFR DN - 1417838

Technical data

Cable

Working capacitance	nom. 40 nF
Wave impedance	120 Ω ±12 Ω (f = 1 MHz)
Nominal voltage, cable	< 600 V (Peak value, not for high-power applications)
Test voltage Core/Core	2000 V (50 Hz, 1 min.)
Test voltage Core/Shield	2000 V (50 Hz, 1 min.)
Flame resistance	According to UL 1685 (CSA FT 4)
	According to UL 1581 (Cable Flame)
	According to IEC 60332-3-24
Resistance to oil	UL 1581
Other resistance	UV resistant According to UL 1581, Section 1200
Ambient temperature (operation)	-40 °C ... 80 °C (cable, fixed installation)

Classifications

eCl@ss

eCl@ss 4.0	27060307
eCl@ss 4.1	27060307
eCl@ss 5.0	27061801
eCl@ss 5.1	27060307
eCl@ss 6.0	27061801
eCl@ss 7.0	27061801
eCl@ss 8.0	27279218

ETIM

ETIM 2.0	EC000830
ETIM 3.0	EC000830
ETIM 4.0	EC001855
ETIM 5.0	EC001855

UNSPSC

UNSPSC 6.01	26121616
UNSPSC 7.0901	26121616
UNSPSC 11	26121604
UNSPSC 12.01	26121616
UNSPSC 13.2	26121616

Approvals

Approvals

Bus system cable - SAC-5P-MINMS/ 1,0-928/MINFR DN - 1417838

Approvals

Approvals

UL Listed / cUL Listed / EAC / cULus Listed

Ex Approvals

Approvals submitted

Approval details

UL Listed

Nominal current IN	10 A
Nominal voltage UN	300 V

cUL Listed

Nominal current IN	10 A
Nominal voltage UN	300 V

EAC

cULus Listed

Drawings

Schematic diagram

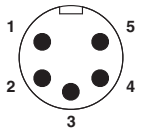

Plug pin assignment for 7/8"-16UNF plug, 5-pos.

Schematic diagram

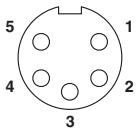

Pin assignment, socket, 7/8"-16UNF, 5-pos., view of female side

Bus system cable - SAC-5P-MINMS/ 1,0-928/MINFR DN - 1417838

Dimensional drawing

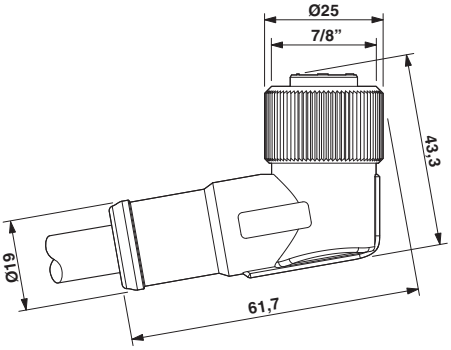

7/8"-16UNF socket, angled

Dimensional drawing

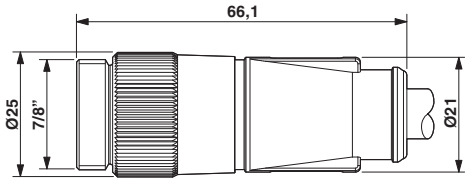

7/8"-16UNF plug, straight

Circuit diagram

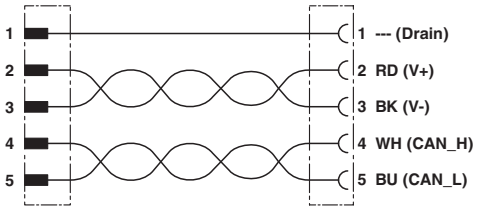

Contact assignment of the 7/8" connector and the 7/8" socket

Phoenix Contact 2016 © - all rights reserved
http://www.phoenixcontact.com

PHOENIX CONTACT GmbH & Co. KG
Flachsmarktstr. 8
32825 Blomberg
Germany
Tel. +49 5235 300
Fax +49 5235 3 41200
http://www.phoenixcontact.com

Below is a list of articles with direct links to our shop Electric Automation Network where you can see:

- Quote per purchase volume in real time.
- Online documentation and datasheets of all products.
- Estimated delivery time enquiry in real time.
- Logistics systems for the shipment of materials almost anywhere in the world.
- Purchasing management, order record and tracking of shipments.

To access the product, click on the green button.

Product	Code	Reference	Product link
Bus system cable, DeviceNet™, 5-position, PVC, gray RAL 7001, shielded, Plug straight 7/8"-16UNF, on Socket angled 7/8"-16UNF, Cable length: 1 m	1417838	SAC-5P-MINMS/ 1,0-928/MINFR DN	Buy on EAN