At the end of this document you will find links to products related to this catalog. You can go directly to our shop by clicking HERE. HERE

Terminal box - C S6 A 350X500X160 - 0899073

Please be informed that the data shown in this PDF Document is generated from our Online Catalog. Please find the complete data in the user's documentation. Our General Terms of Use for Downloads are valid (http://phoenixcontact.com/download)

Terminal box, With hinged door and quarter turn locking including mounting plate, no flange plates, Material: Stainless steel, 316L/1.4404, Surface: brushed, silver, 350 mm x 500 mm x 160 mm, Type of locking: Door with replaceable hinge

Why buy this product

- Innovative product range of high-quality stainless steel housings as the basis for individual terminal boxes
- Reduced assembly and approval effort thanks to ready-equipped terminal boxes
- Flange plates possible on four sides of the housing, including seal protection
- Housing adjustments using threads, bore holes, and rectangular cutouts with consideration given to normative specifications

Key Commercial Data

Packing unit	1 STK
GTIN	4 046356 928342

Technical data

General

Type	AAAAAA-
Color	silver

Dimensions

Width	350 mm
Height	500 mm
Depth	160 mm
Clearance width, maximum DIN rail length	588 mm
Max. material thickness	1.5 mm

General

Housing material	Stainless steel, 316L/1.4404
Surface characteristics	brushed
Note	240 grain
Cover fastening	Door with replaceable hinge
Note	Quarter turn locking with two-way key bit
Assembly instructions	External fixing clips
Surface impact strength	7.00 J

Terminal box - C S6 A 350X500X160 - 0899073

Technical data

General

Seal material	Silicon

Ambient conditions

IP/NEMA protection class	IP66
Ambient temperature (operation)	-55 °C ... 135 °C

Classifications

eCl@ss

eCl@ss 4.0	27180101
eCl@ss 4.1	27180101
eCl@ss 5.0	27180502
eCl@ss 5.1	27180502
eCl@ss 6.0	27180502
eCl@ss 7.0	27180502
eCl@ss 8.0	27180190

ETIM

ETIM 4.0	EC000261
ETIM 5.0	EC000261

Drawings

Terminal box - C S6 A 350X500X160 - 0899073

Dimensional drawing

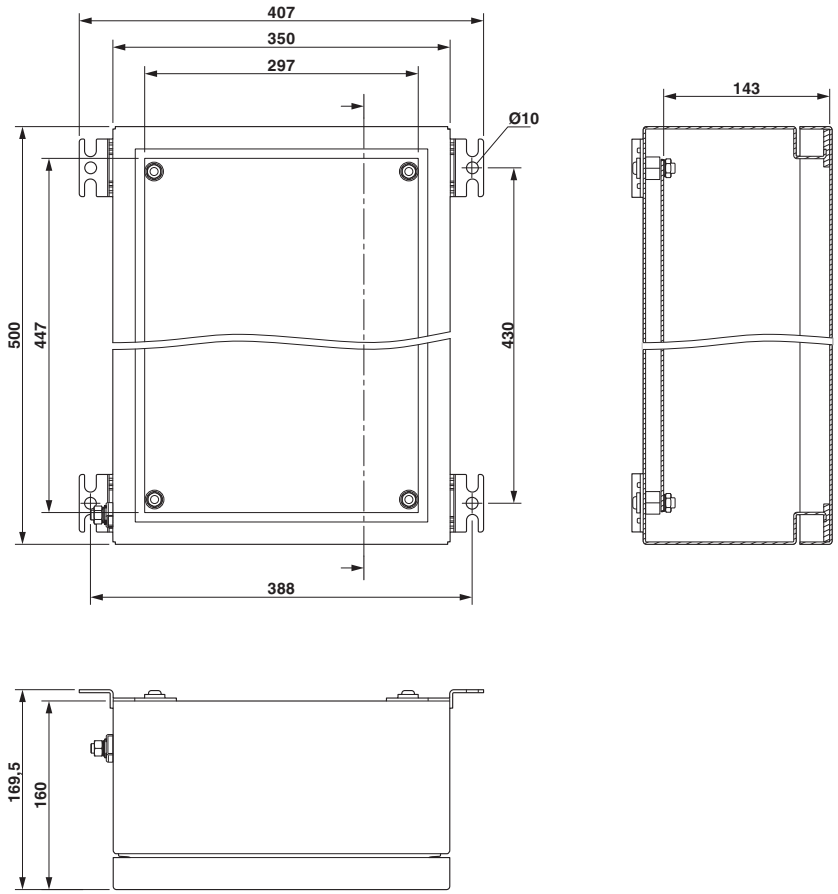

Phoenix Contact 2016 © - all rights reserved
http://www.phoenixcontact.com

PHOENIX CONTACT GmbH & Co. KG
Flachsmarktstr. 8
32825 Blomberg
Germany
Tel. +49 5235 300
Fax +49 5235 3 41200
http://www.phoenixcontact.com

Below is a list of articles with direct links to our shop Electric Automation Network where you can see:

- Quote per purchase volume in real time.
- Online documentation and datasheets of all products.
- Estimated delivery time enquiry in real time.
- Logistics systems for the shipment of materials almost anywhere in the world.
- Purchasing management, order record and tracking of shipments.

To access the product, click on the green button.

Product	Code	Reference	Product link
Terminal box, With hinged door and quarter turn locking including mounting plate, no flange plates, Material: Stainless steel, 316L/1.4404, Surface: brushed, silver, 350 mm x 500 mm x 160 mm, Type of locking: Door with replaceable hinge	0899073	C S6 A 350X500X160	Buy on EAN