Cat. No. I571-E2-02

Accurax G5 servo system

with Analogue/Pulse control
Model:
R88D-KT_ Servo Drives
R88M-K_ Servomotors

USER'S MANUAL

Trademarks and Copyrights

- System names and product names that appear in this manual are the trademarks or registered trademarks of the relevant companies.

© OMRON, 2009

All rights reserved. No part of this publication may be reproduced, stored in a retrieval system, or transmitted, in any form, or by any means, mechanical, electronic, photocopying, recording, or otherwise, without the prior written permission of OMRON.

No patent liability is assumed with respect to the use of the information contained herein. Moreover, because OMRON is constantly striving to improve its high-quality products, the information contained in this manual is subject to change without notice. Every precaution has been taken in the preparation of this manual. Nevertheless, OMRON assumes no responsibility for errors or omissions. Neither is any liability assumed for damages resulting from the use of the information contained in this publication.

Introduction

Thank you for purchasing an OMNUC G5-series Servo Drive. This manual explains how to install and wire the Servo Drive, set parameters needed to operate the Servo Drive, and remedies to be taken and inspection methods to be used should problems occur.

Intended Readers

This manual is intended for the following individuals.

Those having electrical knowledge (certified electricians or individuals having equivalent knowledge) and also being qualified for one of the following:

- Introducing FA equipment
- Designing FA systems
- Managing FA sites

Notice

This manual contains information you need to know to correctly use the Servo Drive and peripheral equipment.
Before using the Servo Drive, read this manual and gain a full understanding of the information provided herein.
After you finished reading the manual, keep it in a convenient place so that it can be referenced at any time.
Make sure this manual is delivered to the end user.

Items Requiring Acknowledgment

1. Terms of Warranty

(1) Warranty period

The warranty period of this product is 1 year after its purchase or delivery to the specified location.

(2) Scope of warranty

If the product fails during the above warranty period due to design, material or workmanship, we will provide a replacement unit or repair the faulty product free of charge at the location where you purchased the product.

Take note, however, that the following failures are excluded from the scope of warranty.

a) Failure due to use or handling of the product in any condition or environment not specified in the catalog, operation manual, etc.
b) Failure not caused by this product
c) Failure caused by any modification or repair not carried out by OMRON
d) Failure caused by any use not intended for this product
e) Failure that could not be predicted with the level of science and technology available when the product was shipped from OMRON
f) Failure caused by a natural disaster or any other reason for which OMRON is not held responsible

Take note that this warranty applies to the product itself, and losses induced by a failure of the product are excluded from the scope of warranty.

2. Limited Liability

(1) OMRON shall not assume any responsibility whatsoever for any special damage, indirect damage or passive damage arising from this product.

(2) OMRON shall not assume any responsibility for programming done by individuals not belonging to OMRON, if the product is programmable, or outcomes of such programming.

3. Conditions for Intended Application

(1) If this product is combined with other product, the customer must check the standards and regulations applicable to such combination. The customer must also check the compatibility of this product with any system, machinery or device used by the customer. If the above actions are not taken, OMRON shall not assume any responsibility regarding the compatibility of this product.

(2) If the product is used in the following applications, consult your OMRON sales representative to check the necessary items according to the specification sheet, etc. Also make sure the product is used within the specified ratings and performance ranges with an ample margin and implement safety measures, such as designing a safety circuit, to minimize danger should the product fail.

a) Used in any outdoor application, application subject to potential chemical contamination or electrical interference, or in any condition or environment not specified in the catalog, operation manual, etc.
b) Nuclear power control equipment, incineration equipment, railway, aircraft and vehicle equipment, medical machinery, entertainment machinery, safety system or any other device controlled by an administrative agency or industry regulation
c) System, machinery or device that may threaten human life or property
d) Gas, water or electricity supply system, system operated continuously for 24 hours or any other equipment requiring high reliability
e) Any other application where a high level of safety corresponding to a) to d) above is required

(3) If the customer wishes to use this product in any application that may threaten human life or property, be sure to confirm beforehand that the entire system is designed in

such a way to notify dangers or ensure the necessary level of safety via design redundancy, and that the product is wired and installed appropriately in the system according to the intended application.

(4) Sample applications explained in the catalog, etc. are provided for reference purposes only. When adopting any of these samples, check the function and safety of each equipment or device.

(5) Understand all prohibited items and notes on use provided herein, so that this product will be used correctly and that customers or third parties will not suffer unexpected losses.

4. Specification Change

The product specifications and accessories explained in the catalog, operation manual, etc. are subject to change, if necessary, for the reasons of improvement, etc. Contact your OMRON sales representative to check the actual specifications of this product.

5. Scope of Service

The price of this product excludes costs of service such as dispatching engineers.
If you have any request regarding service, consult your OMRON sales representative.

6. Scope of Application

The above paragraphs are based on the assumption that this product is traded and used in Japan.
If you wish to trade or use this product outside Japan, consult your OMRON sales representative.

Safety Precautions

■To ensure that the OMNUC G5-series Servomotor and Servo Drive as well as peripheral equipment are used safely and correctly, be sure to read this Safety Precautions section and the main text before using the product in order to learn items you should know regarding the equipment as well as required safety information and precautions.

■Make an arrangement so that this manual also gets to the end user of this product.

■After reading this manual, keep it in a convenient place so that it can be referenced at any time.

Explanation of Display

■The precautions explained in this section describe important information regarding safety and must be followed without fail.

■The display of precautions in this manual and their meanings are explained below.

⚠ DANGER	Indicates an imminently hazardous situation which, if not avoided, will result in death or serious injury. Additionally, there may be severe property damage.
⚠ Caution	Indicates a potentially hazardous situation which, if not avoided, may result in minor or moderate injury, or property damage.

Even those items denoted by the caution symbol may lead to a serious outcome depending on the situation. Accordingly, be sure to observe all safety precautions.

Precautions for Safe Use

Indicates precautions on what to do and what not to do to ensure using the product safely.

Precautions for Correct Use

Indicates precautions on what to do and what not to do to ensure proper operation and performance.

Reference

Indicates an item that helps deepen your understanding of the product or other useful tip.

Explanation of Symbols

Example of symbols	
	△ This symbol indicates danger and caution. The specific instruction is described using an illustration or text inside or near △. The symbol shown to the left indicates "beware of electric shock".
	⃠ This symbol indicates a prohibited item (item you must not do). The specific instruction is described using an illustration or text inside or near ⃠. The symbol shown to the left indicates "disassembly prohibited".
	● This symbol indicates a compulsory item (item that must be done). The specific instruction is described using an illustration or text inside or near ●. The symbol shown to the left indicates "grounding required".

For Safe Use of This Product

■Illustrations contained in this manual sometimes depict conditions without covers and safety shields for the purpose of showing the details. When using this product, be sure to install the covers and shields as specified and use the product according to this manual.

■If the product has been stored for an extended period of time, contact your OMRON sales representative.

⚠ Danger	
	Be sure to ground the frame ground terminals of the Servo Drive and Servomotor to 100 Ω or less. Electric shock may result.
	Never touch the parts inside the Servo Drive. Electric shock may result.
	While the power is supplied, do not remove the front cover, terminal covers, cables and options. Electric shock may result.
	Installation, operation and maintenance or inspection by unauthorized personnel is prohibited. Electric shock or injury may result.
	Before carrying out wiring or inspection, turn OFF the power supply and wait for at least 15 minutes. Electric shock may result.
	Do not damage, pull, stress strongly, or pinch the cables or place heavy articles on them. Electric shock, stopping of Servo Drive operation, or burn damage may result.
	Never touch the rotating part of the Servomotor during operation. Injury may result.
	Never modify the Servo Drive. Injury or equipment damage may result.
	Install a stopping device on the machine to ensure safety. * The holding brake is not a stopping device to ensure safety. Injury may result.
	Install an immediate stop device externally to the machine so that the operation can be stopped and the power supply cut off immediately. Injury may result.
	When the power is restored after a momentary power interruption, the machine may restart suddenly. Never come close to the machine when restarting power. * Implement measures to ensure safety of people nearby even when the machine is restarted. Injury may result.
	After an earthquake, be sure to conduct safety checks. Electric shock, injury or fire may result.
	Never drive the Servomotor using an external drive source. Fire may result.

⚠ Danger

Do not place flammable materials near the Servomotor, Servo Drive, or Regeneration Resistor.
Fire may result.

Install the Servomotor, Servo Drive, and Regeneration Resistor on non-flammable materials such as metals.
Fire may result.

When you perform a system configuration using the safety function, be sure to fully understand the relevant safety standards and the information in the operation manual, and apply them to the system design.
Injury or damage may result.

Do not use the cable when it is laying in oil or water.
Electric shock, injury, or fire may result.

Never connect a commercial power supply directly to the Servomotor.
Fire or failure may result.

Do not perform wiring or any operation with wet hands.
Electric shock, injury, or fire may result.

Do not touch the key grooves with bare hands if a motor with shaft-end key grooves is being used.
Injury may result.

⚠ Caution

Use the Servomotor and Servo Drive in a specified combination.
Fire or equipment damage may result.

Do not store or install the Servo Drive in the following locations:
Location subject to direct sunlight
Location where the ambient temperature exceeds the specified level
Location where the relative humidity exceeds the specified level
Location subject to condensation due to rapid temperature changes
Location subject to corrosive or flammable gases
Location subject to higher levels of dust, salt content, or iron dust
Location subject to splashes of water, oil, chemicals, etc.
Location where the Servo Drive may receive vibration or impact directly
Installing or storing the Servo Drive in these locations may result in fire, electric shock, or equipment damage.

The Servo Drive radiator, Regeneration Resistor, Servomotor, etc. may become hot while the power is supplied or remain hot for a while even after the power supply is cut off. Never touch these components.
A burn injury may result.

Storage and Transportation

Caution

When transporting the Servo Drive, do not hold it by the cables or Servomotor shaft.
Injury or failure may result.

Do not overload the Servo Drive or Servomotor. (Follow the instruction on the product label.)
Injury or failure may result.

Use the motor eye-bolts only when transporting the Servomotor.
Do not use them to transport the machine.
Injury or failure may result.

Installation and Wiring

⚠ Caution	
	Do not step on the Servo Drive or place heavy articles on it. Injury may result.
	Do not block the intake or exhaust openings. Do not allow foreign objects to enter the product. Fire may result.
	Be sure to observe the mounting direction. Failure may result.
	Provide the specified clearance between the Servo Drive and the inner surface of the control panel or other equipment. Fire or failure may result.
	Do not apply strong impact on the Servomotor shaft or Servo Drive. Failure may result.
	Wire the cables correctly and securely. Runaway motor, injury, or failure may result.
	Securely tighten the mounting screws, terminal block screws, and cable screws. Failure may result.
	Use crimp terminals for wiring. If simple twisted wires are connected directly to the protective ground terminal, fire may result.
	Only use the power supply voltage specified in this manual. Burn damage may result.
	In locations where the power supply infrastructure is poor, make sure the rated voltage can be supplied. Equipment damage may result.
	Provide safety measures, such as a breaker, to protect against short circuiting of external wiring. Fire may result.
	If the Servo Drive is used in the following locations, provide sufficient shielding measures. Location subject to noise generates due to static electricity, etc. Location subject to a strong electric or magnetic field Location where exposure to radioactivity may occur Location near power supply lines Using the Servo Drive in these locations may result in equipment damage.
	Connect an immediate stop relay in series with the brake control relay. Injury or failure may result.
	When connecting the battery, make sure the polarity is correct. Battery damage or explosion may result.

Operation and Adjustment

⚠ Caution

	Conduct a test operation after confirming that the equipment is not affected. Equipment damage may result.
	Before operating the Servo Drive in an actual environment, check if it operates correctly based on the parameters you have set. Equipment damage may result.
	Never adjust or set parameters to extreme values, as it will make the operation unstable. Injury may result.
	Separate the motor from the mechanical system and check its operation before installing the motor to the machine. Injury may result.
	If an alarm generated, remove the cause of the alarm and ensure safety, and then reset the alarm and restart the operation. Injury may result.
	Do not use the built-in brake of the motor for normal braking operation. Failure may result.
	Do not operate the Servomotor connected to an excessive load inertia. Failure may result.
	Install safety devices to prevent idle running or lock of the electromagnetic brake or the gear head, or leakage of grease from the gear head. Injury, damage, or taint damage may result.
	If the Servo Drive fails, cut off the power supply to the Servo Drive at the power supply. Fire may result.
	Do not turn ON and OFF the main Servo Drive power supply frequently. Failure may result.

Maintenance and Inspection

⚠ Caution

After replacing the Servo Drive, transfer to the new Servo Drive all data needed to resume operation, before restarting the operation.
Equipment damage may result.

Never repair the Servo Drive by disassembling it.
Electric shock or injury may result.

Be sure to turn OFF the power supply when the Servo Drive is not going to be used for a prolonged period of time.
Injury may result.

Location of Warning Label

The Servo Drive bears a warning label at the following location to provide handling warnings. When handling the Servo Drive, be sure to observe the instructions provided on this label.

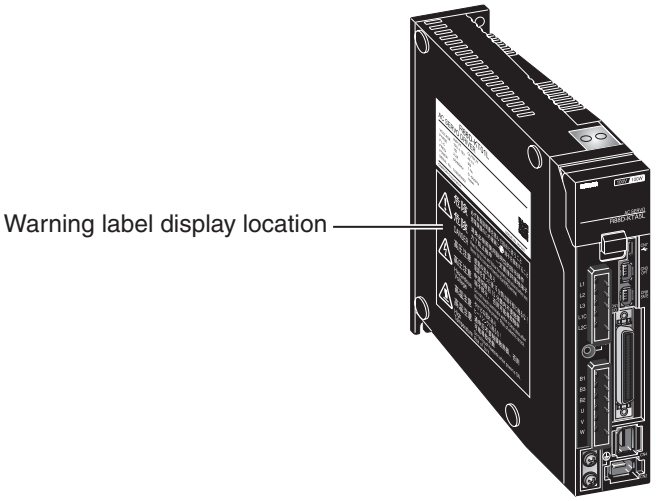

(R88D-KTA5L)

Instructions on Warning Label

Disposal

- When disposing of the battery, insulate it using tape and dispose of it by following the applicable ordinance of your local government.
- Dispose of the Servo Drive as an industrial waste.

Items to Check after Unpacking

After unpacking, check the following items.

- Is this the model you ordered?
- Was there any damage sustained during shipment?

Accessories of This Product

Safety Precautions document × 1 copy

- Connectors, mounting screws, and other accessories other than those in the table below are not supplied. They must be prepared by the customer.
- If any item is missing or a problem is found such as Servo Drive damage, contact the OMRON dealer or sales office where you purchased your product.

Specifications		Connector for main circuit power supply terminals and control circuit power supply terminals	Connector for External Regeneration Resistor connection terminals and motor connection terminals	Safety connector
Single-phase 100 VAC	50 W	Included		
	100 W			
	200 W			
	400 W			
Single-phase/3-phase 200 VAC	100 W			
	200 W			
	400 W			
	750 W			
	1 kW			
	1.5 kW			
3-phase 200 VAC	2 kW			
	3 kW	–		Included
	5 kW			
3-phase 400 VAC	600 W	Included		
	1 kW			
	1.5 kW			
	2 kW			
	3 kW	–		Included
	5 kW			

Revision History

The manual revision symbol is an alphabet appended at the end of the manual number found in the bottom left-hand corner of the front or back cover.

Example

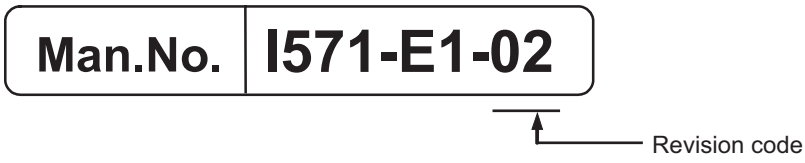

Revision code	Revision date	Revised content
01	September 2009	Original production
02	June 2010	Made corrections and added explanations.

Structure of This Document

This manual consists of the following chapters.
Read the necessary chapter or chapters referring to the following table.

		Outline
Chapter 1	Features and System Configuration	This chapter explains the features of the Servo Drive, name of each part, and applicable EC Directives and UL standards.
Chapter 2	Standard Models and External Dimensions	This chapter explains the models of Servo Drives, Servomotors, and peripheral equipment, and provides the external dimensions and mounting dimensions.
Chapter 3	Specifications	This chapter provides the general specifications, characteristics, connector specifications, and I/O circuits of the Servo Drives as well as the general specifications, characteristics, encoder specifications of the Servomotors and other peripheral devices.
Chapter 4	System Design	This chapter explains the installation conditions for the Servo Drive and Servomotor, wiring methods including wiring conforming to EMC Directives and regenerative energy calculation methods as well as the performance of External Regeneration Resistors.
Chapter 5	Basic Control Modes	This chapter explains an outline of operations available in various control modes and explains the contents of setting.
Chapter 6	Applied Functions	This chapter gives outline of applied functions such as damping control, electronic gears, gain switching and disturbance observer, and explains the contents of setting.
Chapter 7	Safety Function	This function stops the Servomotor based on a signal from a safety controller or safety sensor. An outline of the function is given together with operation and connection examples.
Chapter 8	Parameters Details	This chapter explains the set value and contents of setting of each parameter.
Chapter 9	Operation	This chapter gives the operating procedures and explains how to operate in each mode.
Chapter 10	Adjustment Functions	This chapter explains the functions, setting methods, and items to note regarding various gain adjustments.
Chapter 11	Error and Maintenance	This chapter explains the items to check when problems occur, error diagnosis using the alarm LED display and measures, error diagnosis based on the operating condition and measures, and periodic maintenance.
Chapter 12	Appendix	This chapter provides connection examples using OMRON's PLC and Position Controller, as well as a list of parameters.

Table Of Contents

Introduction 1
Items Requiring Acknowledgment 2
Safety Precautions 4
Items to Check after Unpacking 12
Revision History 13
Structure of This Document 14

Chapter1 Features and System Configuration

1-1 Outline 1-1
1-2 System Configuration 1-3
1-3 Names and Functions 1-4
1-4 System Block Diagrams 1-6
1-5 Applicable Standards 1-11

Chapter2 Standard Models and External Dimensions

2-1 Servo System Configuration 2-1
2-2 How to Read Model Numbers 2-3
2-3 Standard Model Tables 2-5
2-4 External and Mounting Dimensions 2-24
2-5 EMC Filter Dimensions 2-56

Chapter3 Specifications

3-1 Servo Drive Specifications 3-1
3-2 Overload Characteristics (Electronic Thermal Function) 3-53
3-3 Servomotor Specifications 3-54
3-4 Cable and Connector Specifications 3-81
3-5 Servo Relay Units and Cable Specifications 3-110
3-6 External Regeneration Resistor Specifications 3-129
3-7 EMC Filter Specifications 3-131

Chapter4 System Design

4-1 Installation Conditions 4-1
4-2 Wiring 4-7
4-3 Wiring Conforming to EMC Directives 4-21
4-4 Regenerative Energy Absorption 4-35

Chapter5 Basic Control Mode

5-1 Position Control 5-1
5-2 Speed Control 5-7
5-3 Torque Control 5-14
5-4 Internally Set Speed Control 5-19
5-5 Switching Control 5-22
5-6 Fully-closed Control 5-25

Chapter6 Applied Functions

6-1 Damping Control 6-1
6-2 Adaptive Filter 6-5
6-3 Notch Filter 6-7
6-4 Electronic Gear Function 6-10
6-5 Encoder Dividing Function 6-13
6-6 Brake Interlock 6-18
6-7 Gain Switching Function 6-23
6-8 Gain Switching 3 Function 6-32
6-9 Torque Limit 6-33
6-10 Sequence I/O Signal 6-36
6-11 Forward and Reverse Drive Prohibition Functions 6-42
6-12 Disturbance Observer Function 6-45
6-13 Friction Torque Compensation Function 6-47
6-14 Inertia Ratio Switching Function 6-49
6-15 Hybrid Vibration Suppression Function 6-50
6-16 Feed-forward Function 6-51
6-17 Instantaneous Speed Observer Function 6-55

Chapter7 Safety Function

7-1 Safe Torque OFF (STO) Function 7-1
7-2 Operation Example 7-4
7-3 Connection Example 7-6

Chapter8 Parameter Details

8-1 Basic Parameters 8-1
8-2 Gain Parameters 8-9
8-3 Vibration Suppression Parameters 8-20
8-4 Analog Control Parameters 8-25
8-5 Interface Monitor Setting Parameters 8-36
8-6 Extended Parameters 8-47
8-7 Special Parameters 8-60

Chapter9 Operation

9-1 Operational Procedure 9-1
9-2 Preparing for Operation 9-2
9-3 Using the Front Display 9-6
9-4 Setting the Mode 9-7
9-5 Trial Operation 9-33

Chapter10 Adjustment Functions

10-1 Gain Adjustment 10-1
10-2 Realtime Autotuning 10-3
10-3 Manual Tuning 10-12

Table Of Contents

Chapter11 Troubleshooting and Maintenance

11-1 Troubleshooting 11-1
11-2 Warning List 11-4
11-3 Alarm List 11-5
11-4 Troubleshooting 11-10
11-5 Periodic Maintenance 11-21

Chapter12 Appendix

12-1 Connection Examples 12-1
12-2 Parameter List 12-11

Index

1

Features and System Configuration

This chapter explains the features of the Servo Drive, name of each part, and applicable EC Directives and UL standards.

1-1 Outline 1-1
Outline of the OMNUC G5 Series 1-1
Features of OMNUC G5-series Servo Drives 1-1
1-2 System Configuration 1-3
1-3 Names and Functions 1-4
Servo Drive Part Names 1-4
Servo Drive Functions 1-5
1-4 System Block Diagrams 1-6
1-5 Applicable Standards 1-11
EC Directives 1-11
UL and cUL Standards 1-11
Functional Safety 1-11

1-1 Outline

Outline of the OMNUC G5 Series

With the OMNUC G5 Series, you can perform fully-closed control in addition to position control, speed control and torque control.
Various models are available supporting wide-ranging motor capacities from 50 W to 5 kW and input power supplies from 100 to 400 V. You will surely find a model that best suits your application.
Motors with high-resolution 20-bit incremental encoders and 17-bit absolute/incremental encoders are available as standard models.
The OMNUC G5 Series features realtime autotuning function and adaptive filter function that automatically perform complicated gain adjustments. A notch filter can also be automatically set to suppress machine vibration by reducing machine resonance during operation.
The damping control function of the Servomotor and Servo Drive realizes stable stopping performance in a mechanism which vibrates because of the low rigidity of the load.

Features of OMNUC G5-series Servo Drives

OMNUC G5-series Servo Drives have the following features.

Switching between Seven Control Modes

You can switch between seven control modes: 1) Position Control Mode, 2) Speed Control Mode, 3) Torque Control Mode, 4) Position and Speed Control Mode, 5) Position and Torque Control Mode, 6) Speed and Torque Control Mode, and 7) Fully-closed Control Mode. Desired modes can be selected with the flexible drive according to your need. A single drive supports various applications.

Achievement of Accurate Positioning by Fully-closed Control

Feedbacks from the external encoder connected to the motor is used to accurately control positions. Accordingly, position control is not affected by deviation caused by ball screws or temperature.

Wide Range of Power Supplies to Meet Any Need

The OMNUC G5 Series now has models supporting 400 V for use with large equipment, at overseas facilities and in wide-ranging applications and environment. Since the utilization ratio of facility equipment also increases, the TCO (total cost of ownership) will come down.

Safe Torque OFF (STO) Function to Ensure Safety

You can cut off the motor current to stop the motor based on a signal from an emergency stop button or other safety equipment. In addition to the conventional stop method based on a control signal, the STO function, which permits direct stopping without a need to involve the control circuits, provides an emergency stop from 2 systems, thereby enhancing safety.

Suppressing Vibration of Low-rigidity Mechanisms during Acceleration/Deceleration

The damping control function suppresses vibration of low-rigidity mechanisms or devices whose tips tend to vibrate.

Two damping filters are provided to enable switching the damping frequency automatically according to the rotation direction and also via an external signal. In addition, the settings can be made easily by setting the damping frequency and filter values. You are assured of stable operation even if the set values are inappropriate.

1-2 System Configuration

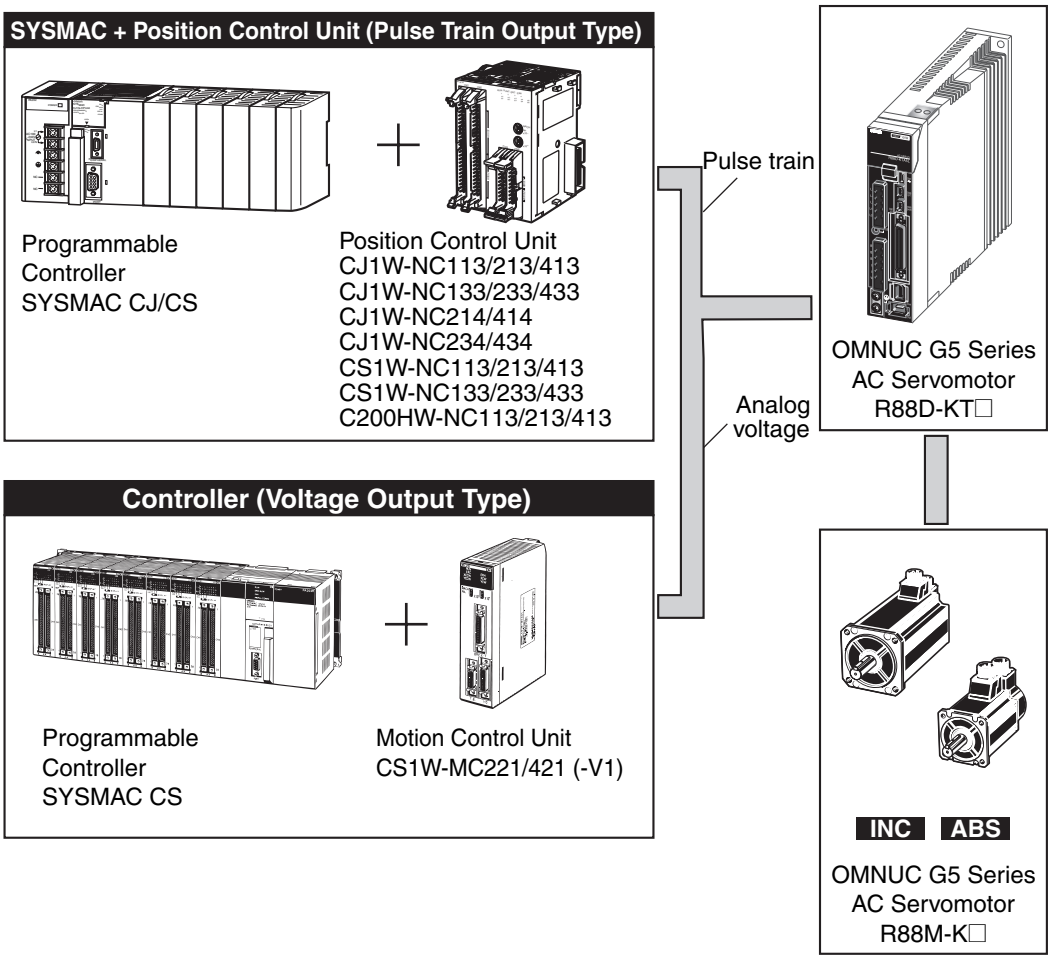

♦The following units support a motor with absolute encoder:
CJ1W-NC214/414
CJ1W-NC234/434
CS1W-MC221/421 (-V1)

1-3 Names and Functions

Servo Drive Part Names

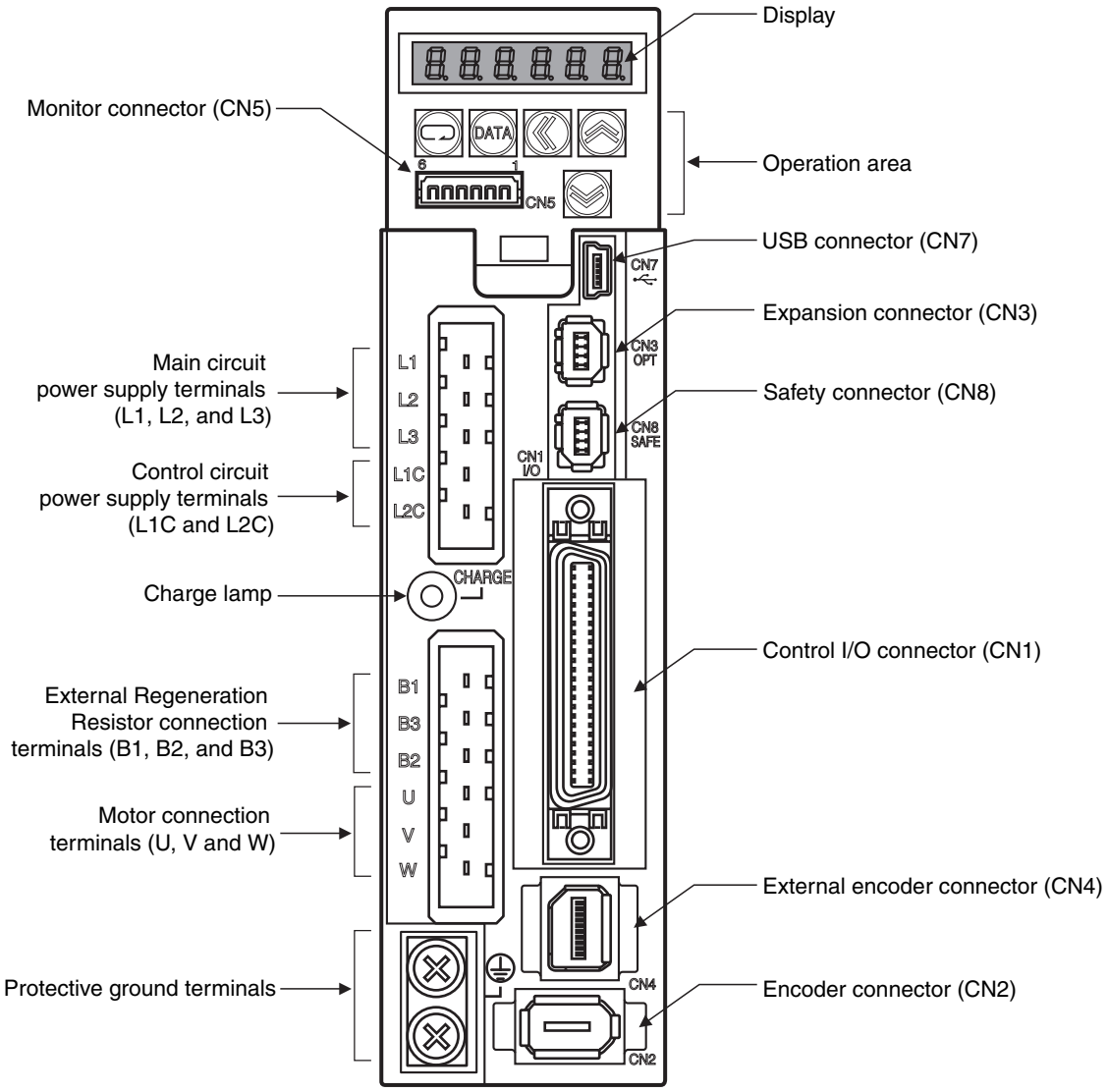

Servo Drive Functions

Display

A 6-digit 7-segment LED display shows the drive status, alarm codes, parameters, and other information.

Operation Area

Monitors the parameter setting and drive condition.

Charge Lamp

Lights when the main circuit power supply is turned ON.

Control I/O Connector (CN1)

Used for command input signals and I/O signals.

Encoder Connector (CN2)

Connector for the encoder installed in the Servomotor.

Expansion Connector (CN3)

A spare connector for expansion. Do not connect anything.

External Encoder Connector (CN4)

Connector for an encoder signal used during fully-closed control.

Monitor Connector (CN5)

You can use a special cable to monitor values, such as the motor rotation speed, torque command value, etc.

USB Connector (CN7)

Communications connector for the computer.

Safety Connector (CN8)

Connector for safety devices.
If no safety devices are used, keep the factory-set safety bypass connector installed.

1-4 System Block Diagrams

Size A: R88D-KTA5L/-01L/-02H
Size B: R88D-KT02L/-04H
Size C: R88D-KT04L/KT08H

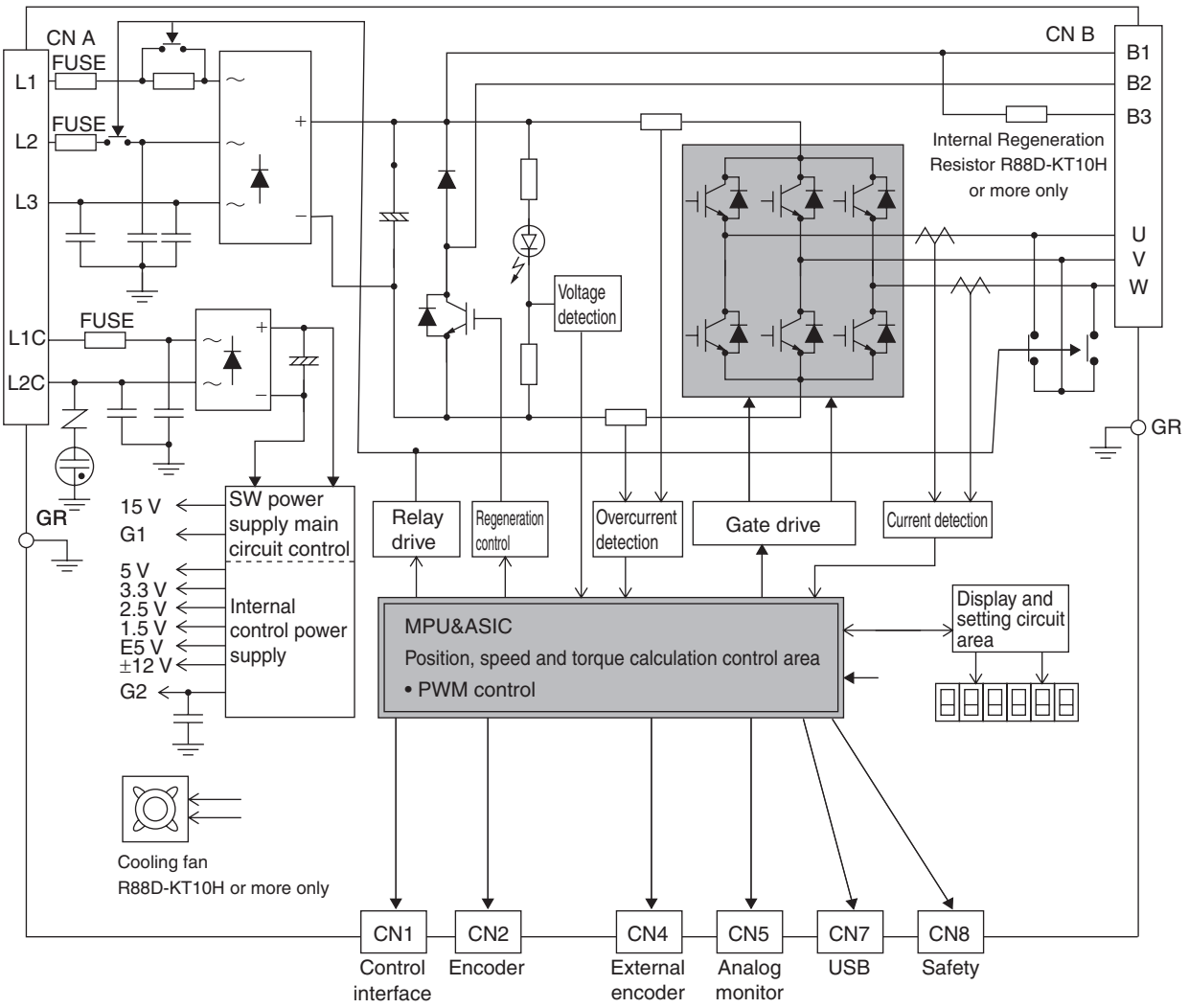

Size D: R88D-KT10H/-15H

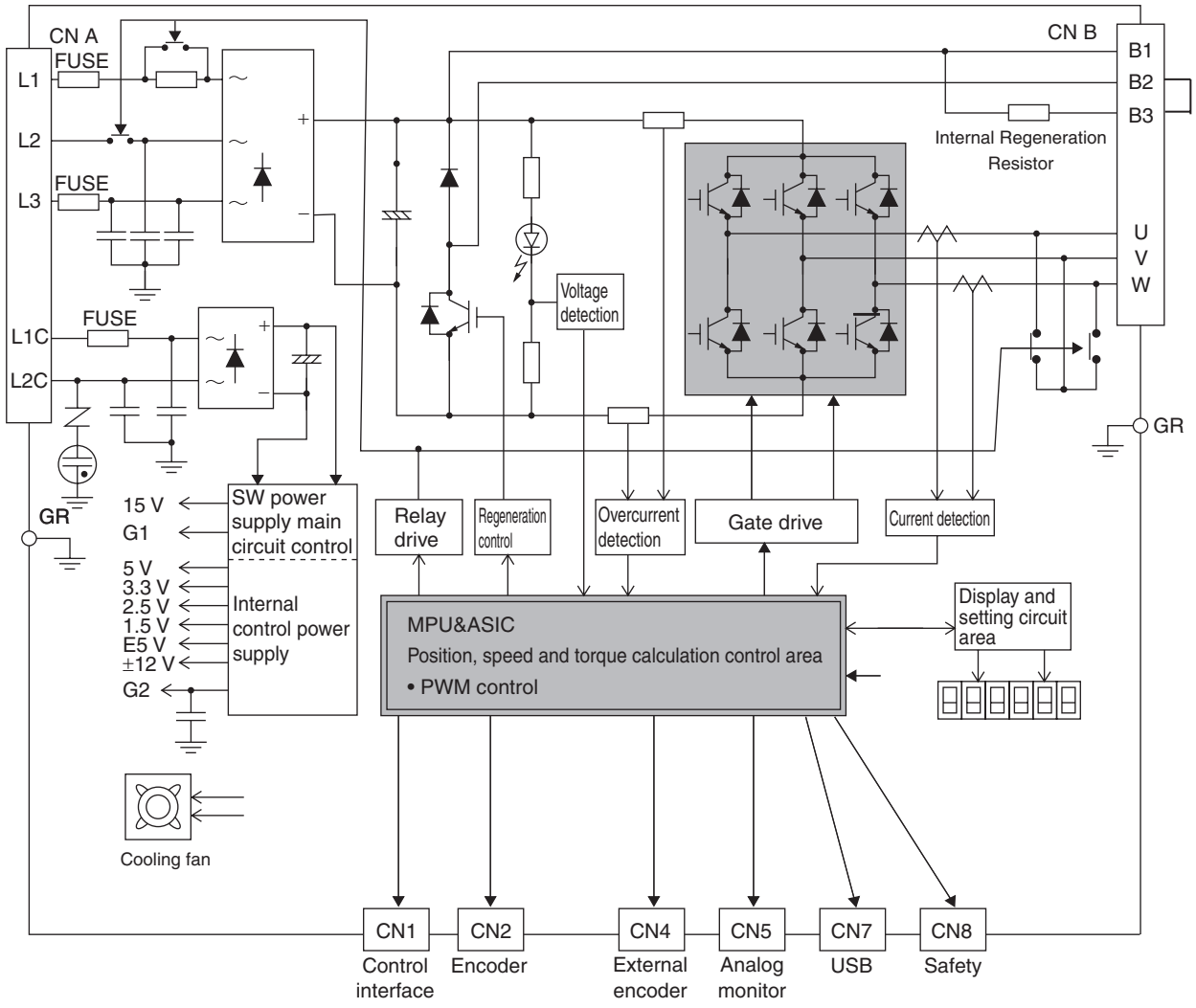

Size D: R88D-KT06F/-10F/-15F

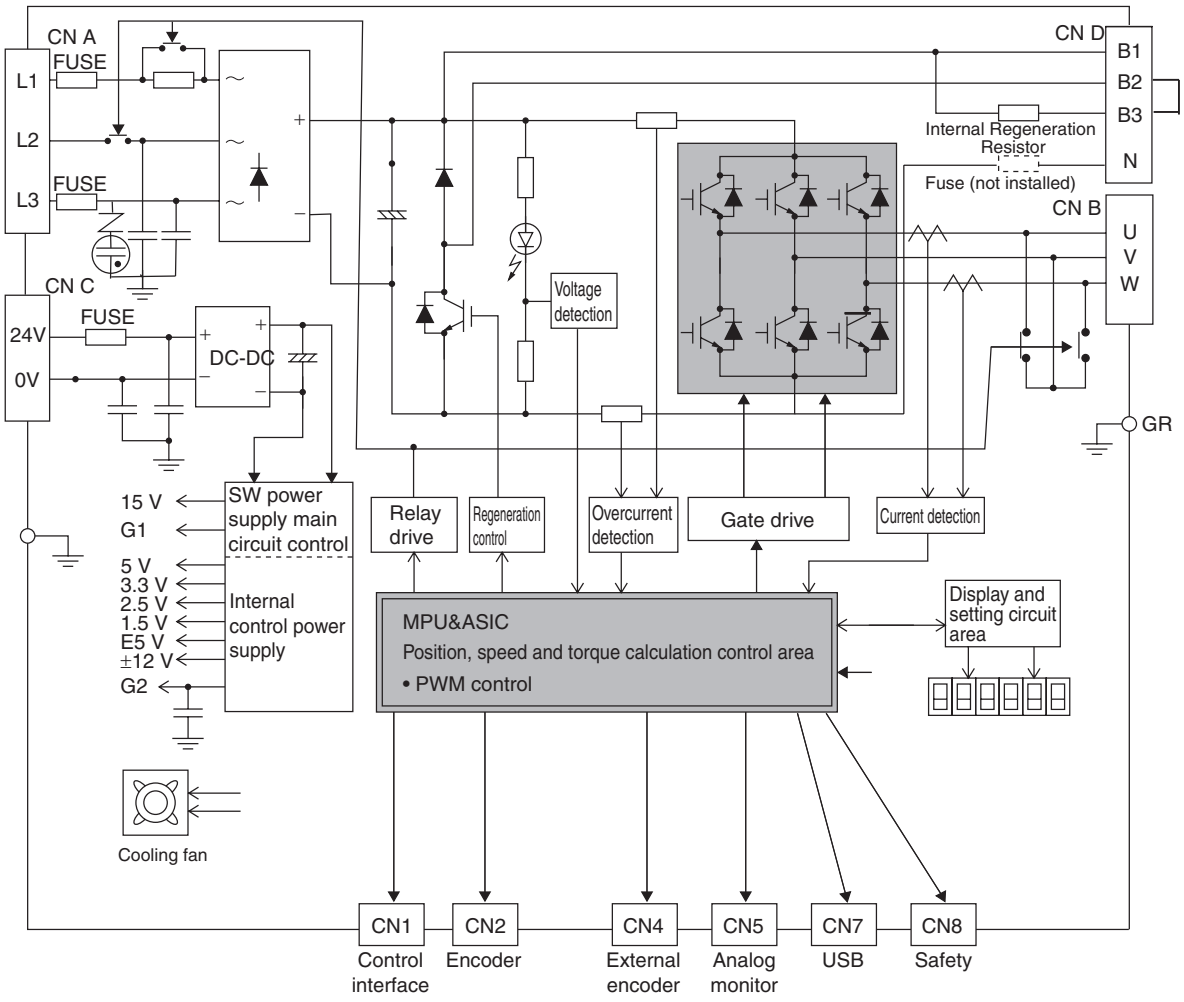

Size E: R88D-KT20H
Size F: R88D-KT30H/-50H

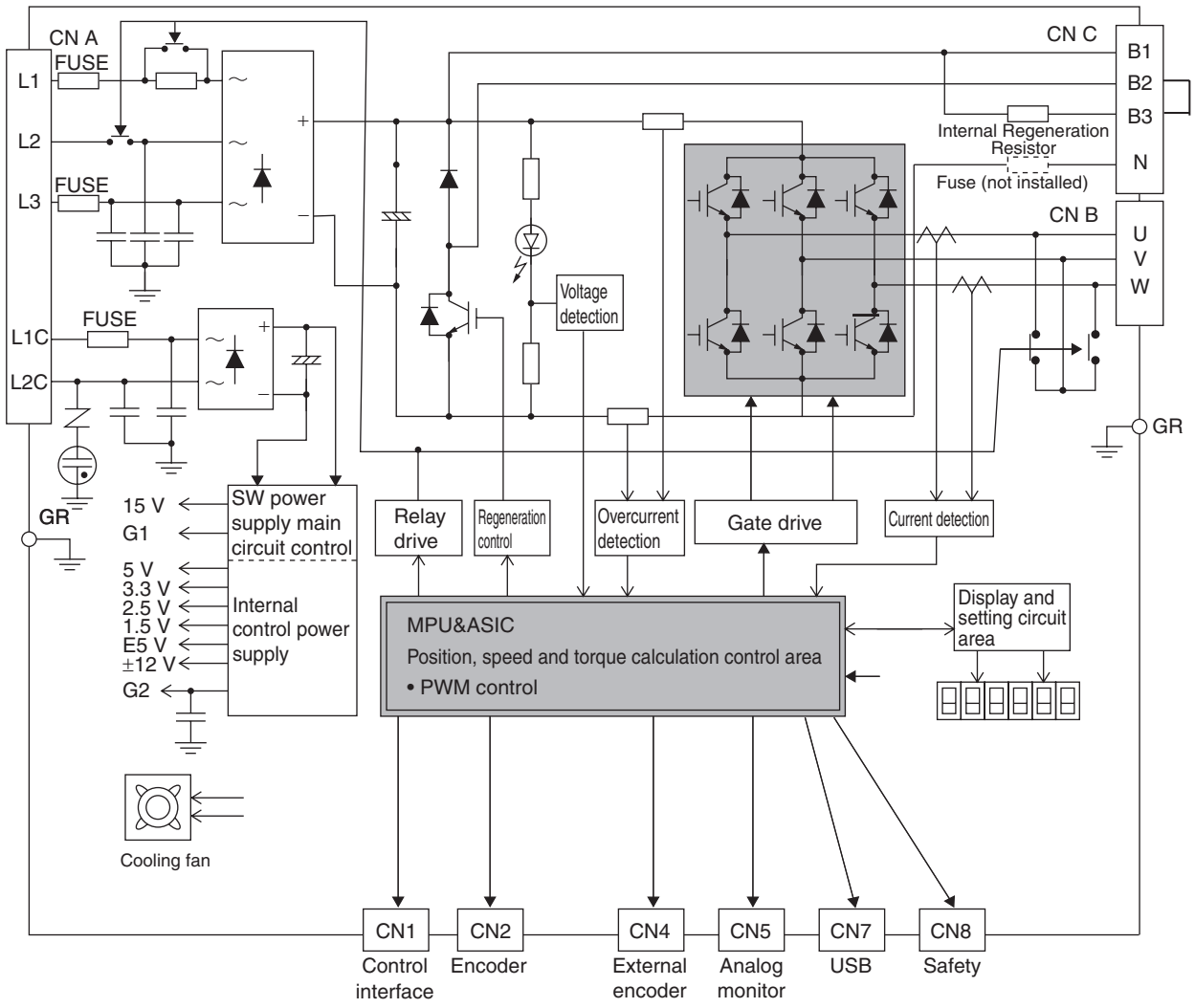

Size E: R88D-KT20F
Size F: R88D-KT30F/-50F

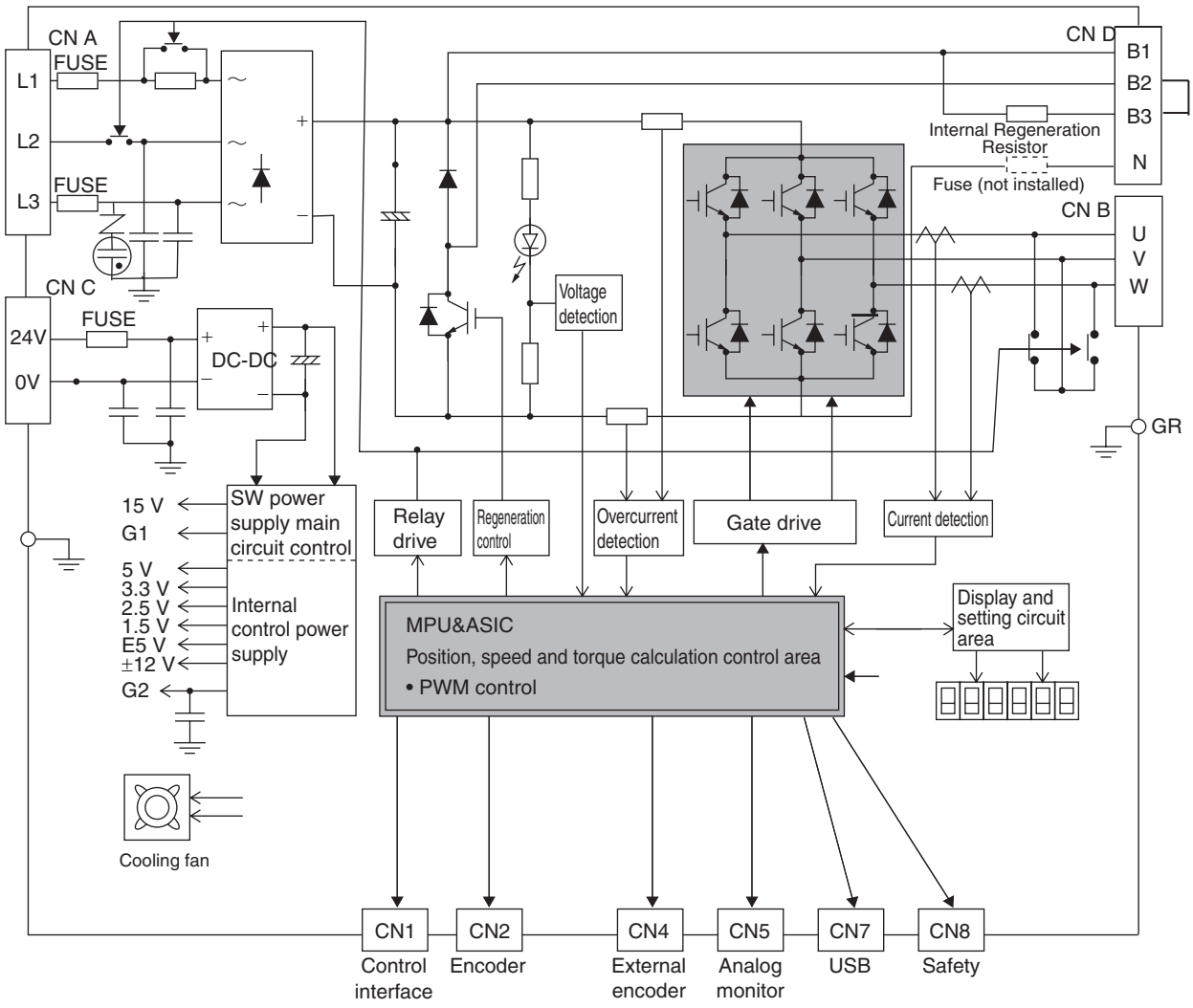

1-5 Applicable Standards

EC Directives

EC Directives	Product	Applicable standards
Low Voltage Directive	AC Servo Drive	EN 61800-5-1
	AC Servomotor	EN60034-1/-5
EMC Directives	AC Servo Drive AC Servomotor	EN 55011 class A group 1
		IEC61800-3
		EN61000-6-2

Note. To conform to EMC directives, the Servomotor and Servo Drive must be installed under the conditions described in "4-3 Wiring Conforming to EMC Directives" (P.4-21).

UL and cUL Standards

Standard	Product	Applicable standards	File number
UL standards	AC Servo Drive	UL508C	E179149
	AC Servomotor	UL1004-1	E331224
CSA standards	AC Servo Drive	CSA22.2 No. 14	E179149
	AC Servomotor	CSA22.2 No. 100	E331224

Functional Safety

Standard	Product	Applicable standards
Functional safety	AC Servo Drive	EN954-1 (Category 3) ISO13849-1 (Performance level D) EN61508 (SIL2) EN62061 (SIL2) EV61800-5-2 (STO) IEC61326-3-1 (SIL2)

2

Standard Models and External Dimensions

This chapter explains the models of Servo Drives, Servomotors, and peripheral equipment, and provides the external dimensions and mounting dimensions.

2-1 Servo System Configuration 2-1

2-2 How to Read Model Numbers 2-3

Servo Drive 2-3
Servomotor 2-4

2-3 Standard Model Tables 2-5

Servo Drive Model Table 2-5
Servomotor Model Tables 2-6
Servo Drive and Servomotor Combination Tables 2-10
Peripheral Equipment and Cable Model Tables 2-12

2-4 External and Mounting Dimensions 2-24

Servo Drive Dimensions 2-24
Servomotor Dimensions 2-36
External Regeneration Resistor Dimensions 2-55

2-5 EMC Filter Dimensions 2-56

2-1 Servo System Configuration

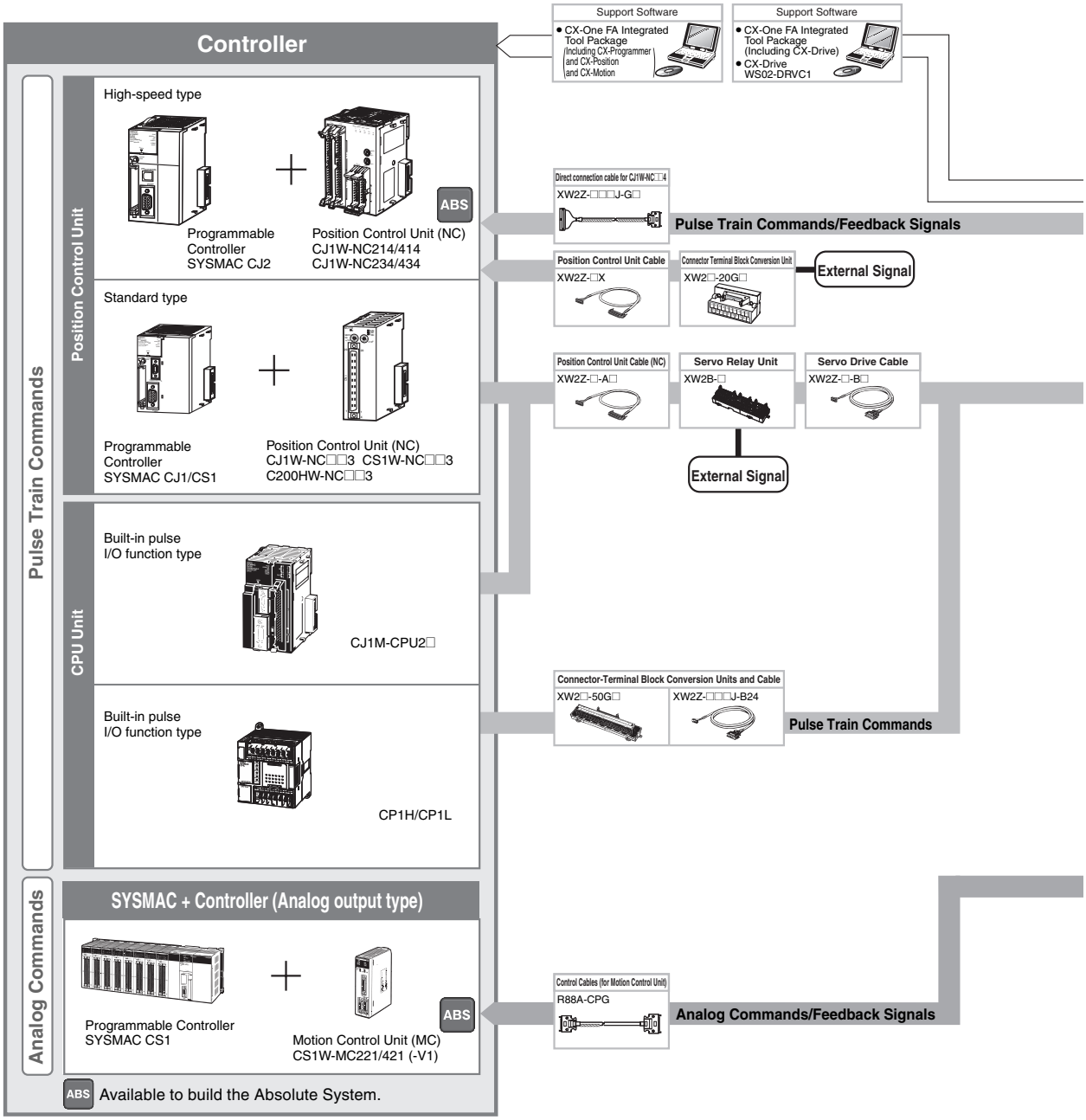

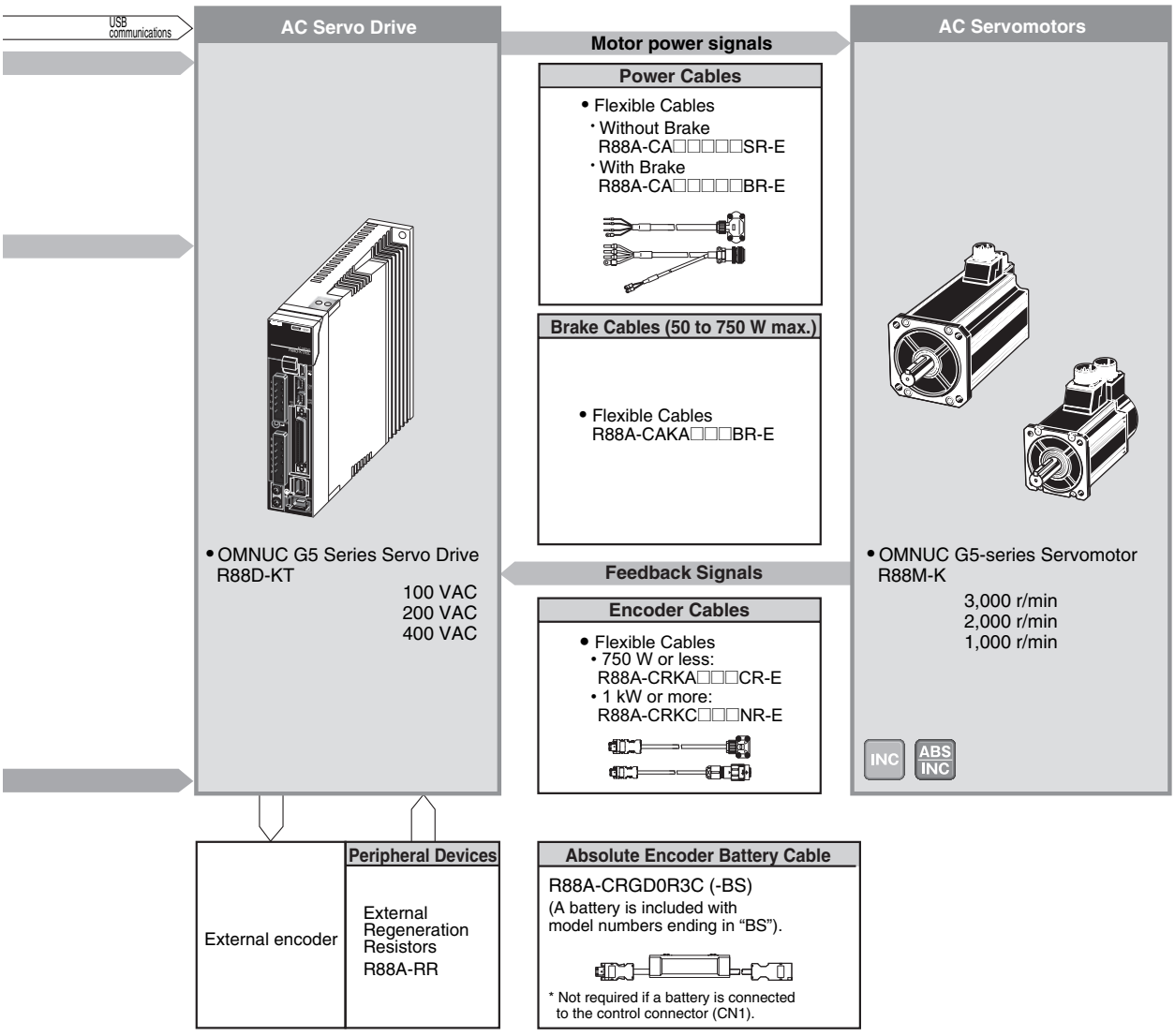
USB communications
AC Servo Drive
Motor power signals
AC Servomotors
Power Cables
• Flexible Cables
・Without Brake
R88A-CA□□□□□SR-E
・With Brake
R88A-CA□□□□□BR-E
Brake Cables (50 to 750 W max.)
• Flexible Cables
R88A-CAKA□□□BR-E
• OMNUC G5 Series Servo Drive
R88D-KT
100 VAC
200 VAC
400 VAC
Feedback Signals
Encoder Cables
• Flexible Cables
• 750 W or less:
R88A-CRKA□□□CR-E
• 1 kW or more:
R88A-CRKC□□□NR-E
• OMNUC G5-series Servomotor
R88M-K
3,000 r/min
2,000 r/min
1,000 r/min
INC
ABS
INC
External encoder
Peripheral Devices
External
Regeneration
Resistors
R88A-RR
Absolute Encoder Battery Cable
R88A-CRGD0R3C (-BS)
(A battery is included with
model numbers ending in “BS”).
* Not required if a battery is connected
to the control connector (CN1).

2-2 How to Read Model Numbers

Servo Drive

The Servo Drive model number tells the Servo Drive type, applicable Servomotor capacity, power supply voltage, etc.

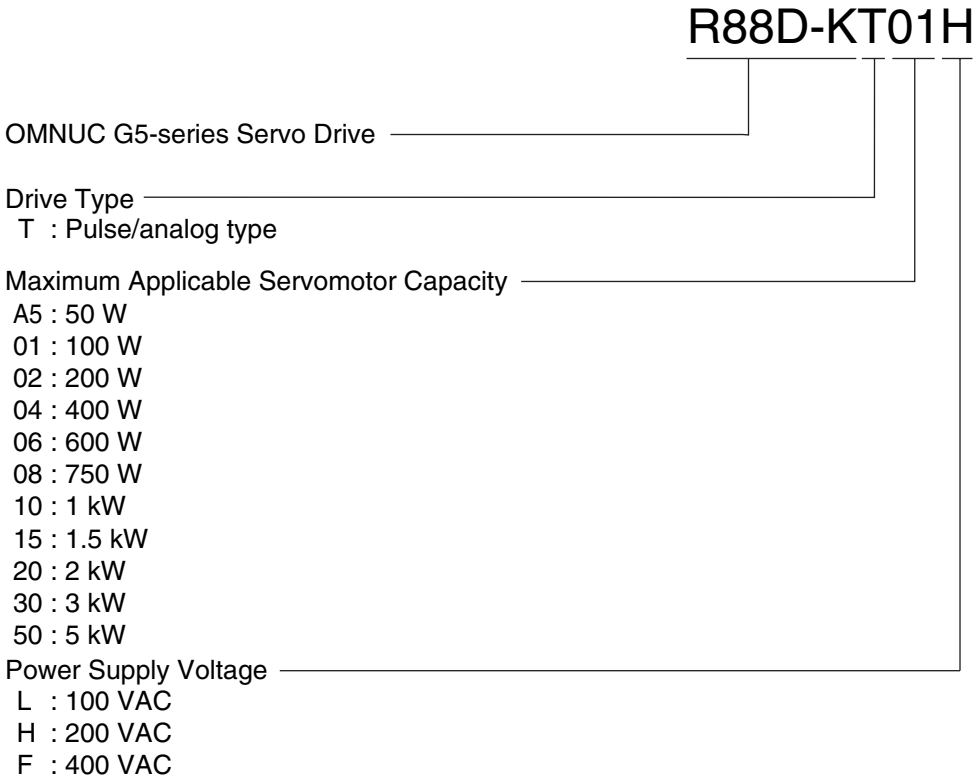

Servomotor

R88M-K10030H-BOS2

OMNUC G5-series Servomotor

Servomotor Capacity
- 050 : 50 W
- 100 : 100 W
- 200 : 200 W
- 400 : 400 W
- 600 : 600 W
- 750 : 750 W
- 900 : 900 W
- 1K0 : 1 kW
- 1K5 : 1.5 kW
- 2K0 : 2 kW
- 3K0 : 3 kW
- 4K0 : 4 kW
- 5K0 : 5 kW

Rated Rotation Speed
- 10 : 1,000 r/min
- 20 : 2,000 r/min
- 30 : 3,000 r/min

Applied Voltage
- F : 400 VAC (incremental encoder specifications)
- H : 200 VAC (incremental encoder specifications)
- L : 100 VAC (incremental encoder specifications)
- C : 400 VAC (absolute encoder specifications)
- T : 200 VAC (absolute encoder specifications)
- S : 100 VAC (absolute encoder specifications)

Options
- Blank:Straight shaft, no key
- B : With brake
- O : With oil seal
- S2 : With key and tap

2-3 Standard Model Tables

Servo Drive Model Table

Specifications		Model
Single-phase 100 VAC	50 W	R88D-KTA5L
	100 W	R88D-KT01L
	200 W	R88D-KT02L
	400 W	R88D-KT04L
Single-phase/3-phase 200 VAC	100 W	R88D-KT01H
	200 W	R88D-KT02H
	400 W	R88D-KT04H
	750 W	R88D-KT08H
	1 kW	R88D-KT10H
	1.5 kW	R88D-KT15H
3-phase 200 VAC	2 kW	R88D-KT20H
	3 kW	R88D-KT30H
	5 kW	R88D-KT50H
3-phase 400 VAC	600 W	R88D-KT06F
	1 kW	R88D-KT10F
	1.5 kW	R88D-KT15F
	2 kW	R88D-KT20F
	3 kW	R88D-KT30F
	5 kW	R88D-KT50F

Servomotor Model Tables

3,000-r/min Servomotors

Specifications			Model			
			With incremental encoder		With absolute encoder	
			Straight shaft without key	Straight shaft with key and tap	Straight shaft without key	Straight shaft with key and tap
Without brakes	100 V	50 W	R88M-K05030H	R88M-K05030H-S2	R88M-K05030T	R88M-K05030T-S2
		100 W	R88M-K10030L	R88M-K10030L-S2	R88M-K10030S	R88M-K10030S-S2
		200 W	R88M-K20030L	R88M-K20030L-S2	R88M-K20030S	R88M-K20030S-S2
		400 W	R88M-K40030L	R88M-K40030L-S2	R88M-K40030S	R88M-K40030S-S2
	200 V	50 W	R88M-K05030H	R88M-K05030H-S2	R88M-K05030T	R88M-K05030T-S2
		100 W	R88M-K10030H	R88M-K10030H-S2	R88M-K10030T	R88M-K10030T-S2
		200 W	R88M-K20030H	R88M-K20030H-S2	R88M-K20030T	R88M-K20030T-S2
		400 W	R88M-K40030H	R88M-K40030H-S2	R88M-K40030T	R88M-K40030T-S2
		750 W	R88M-K75030H	R88M-K75030H-S2	R88M-K75030T	R88M-K75030T-S2
		1 kW	R88M-K1K030H	R88M-K1K030H-S2	R88M-K1K030T	R88M-K1K030T-S2
		1.5 kW	R88M-K1K530H	R88M-K1K530H-S2	R88M-K1K530T	R88M-K1K530T-S2
		2 kW	R88M-K2K030H	R88M-K2K030H-S2	R88M-K2K030T	R88M-K2K030T-S2
		3 kW	R88M-K3K030H	R88M-K3K030H-S2	R88M-K3K030T	R88M-K3K030T-S2
		4 kW	R88M-K4K030H	R88M-K4K030H-S2	R88M-K4K030T	R88M-K4K030T-S2
		5 kW	R88M-K5K030H	R88M-K5K030H-S2	R88M-K5K030T	R88M-K5K030T-S2
	400 V	750 W	R88M-K75030F	R88M-K75030F-S2	R88M-K75030C	R88M-K75030C-S2
		1 kW	R88M-K1K030F	R88M-K1K030F-S2	R88M-K1K030C	R88M-K1K030C-S2
		1.5 kW	R88M-K1K530F	R88M-K1K530F-S2	R88M-K1K530C	R88M-K1K530C-S2
		2 kW	R88M-K2K030F	R88M-K2K030F-S2	R88M-K2K030C	R88M-K2K030C-S2
		3 kW	R88M-K3K030F	R88M-K3K030F-S2	R88M-K3K030C	R88M-K3K030C-S2
		4 kW	R88M-K4K030F	R88M-K4K030F-S2	R88M-K4K030C	R88M-K4K030C-S2
		5 kW	R88M-K5K030F	R88M-K5K030F-S2	R88M-K5K030C	R88M-K5K030C-S2

Specifications			Model			
			With incremental encoder		With absolute encoder	
			Straight shaft without key	Straight shaft with key and tap	Straight shaft without key	Straight shaft with key and tap
With brakes	100 V	50 W	R88M-K05030H-B	R88M-K05030H-BS2	R88M-K05030T-B	R88M-K05030T-BS2
		100 W	R88M-K10030L-B	R88M-K10030L-BS2	R88M-K10030S-B	R88M-K10030S-BS2
		200 W	R88M-K20030L-B	R88M-K20030L-BS2	R88M-K20030S-B	R88M-K20030S-BS2
		400 W	R88M-K40030L-B	R88M-K40030L-BS2	R88M-K40030S-B	R88M-K40030S-BS2
	200 V	50 W	R88M-K05030H-B	R88M-K05030H-BS2	R88M-K05030T-B	R88M-K05030T-BS2
		100 W	R88M-K10030H-B	R88M-K10030H-BS2	R88M-K10030T-B	R88M-K10030T-BS2
		200 W	R88M-K20030H-B	R88M-K20030H-BS2	R88M-K20030T-B	R88M-K20030T-BS2
		400 W	R88M-K40030H-B	R88M-K40030H-BS2	R88M-K40030T-B	R88M-K40030T-BS2
		750 W	R88M-K75030H-B	R88M-K75030H-BS2	R88M-K75030T-B	R88M-K75030T-BS2
		1 kW	R88M-K1K030H-B	R88M-K1K030H-BS2	R88M-K1K030T-B	R88M-K1K030T-BS2
		1.5 kW	R88M-K1K530H-B	R88M-K1K530H-BS2	R88M-K1K530T-B	R88M-K1K530T-BS2
		2 kW	R88M-K2K030H-B	R88M-K2K030H-BS2	R88M-K2K030T-B	R88M-K2K030T-BS2
		3 kW	R88M-K3K030H-B	R88M-K3K030H-BS2	R88M-K3K030T-B	R88M-K3K030T-BS2
		4 kW	R88M-K4K030H-B	R88M-K4K030H-BS2	R88M-K4K030T-B	R88M-K4K030T-BS2
		5 kW	R88M-K5K030H-B	R88M-K5K030H-BS2	R88M-K5K030T-B	R88M-K5K030T-BS2
	400 V	750 W	R88M-K75030F-B	R88M-K75030F-BS2	R88M-K75030C-B	R88M-K75030C-BS2
		1 kW	R88M-K1K030F-B	R88M-K1K030F-BS2	R88M-K1K030C-B	R88M-K1K030C-BS2
		1.5 kW	R88M-K1K530F-B	R88M-K1K530F-BS2	R88M-K1K530C-B	R88M-K1K530C-BS2
		2 kW	R88M-K2K030F-B	R88M-K2K030F-BS2	R88M-K2K030C-B	R88M-K2K030C-BS2
		3 kW	R88M-K3K030F-B	R88M-K3K030F-BS2	R88M-K3K030C-B	R88M-K3K030C-BS2
		4 kW	R88M-K4K030F-B	R88M-K4K030F-BS2	R88M-K4K030C-B	R88M-K4K030C-BS2
		5 kW	R88M-K5K030F-B	R88M-K5K030F-BS2	R88M-K5K030C-B	R88M-K5K030C-BS2

Note. Models with oil seals are also available.

2,000-r/min Servomotors

Specifications			Model			
			With incremental encoder		With absolute encoder	
			Straight shaft without key	Straight shaft with key and tap	Straight shaft without key	Straight shaft with key and tap
Without brakes	200 V	1 kW	R88M-K1K020H	R88M-K1K020H-S2	R88M-K1K020T	R88M-K1K020T-S2
		1.5 kW	R88M-K1K520H	R88M-K1K520H-S2	R88M-K1K520T	R88M-K1K520T-S2
		2 kW	R88M-K2K020H	R88M-K2K020H-S2	R88M-K2K020T	R88M-K2K020T-S2
		3 kW	R88M-K3K020H	R88M-K3K020H-S2	R88M-K3K020T	R88M-K3K020T-S2
		4 kW	R88M-K4K020H	R88M-K4K020H-S2	R88M-K4K020T	R88M-K4K020T-S2
		5 kW	R88M-K5K020H	R88M-K5K020H-S2	R88M-K5K020T	R88M-K5K020T-S2
	400 V	400 W	R88M-K40020F	R88M-K40020F-S2	R88M-K40020C	R88M-K40020C-BS2
		600 W	R88M-K60020F	R88M-K60020F-S2	R88M-K60020C	R88M-K60020C-BS2
		1 kW	R88M-K1K020F	R88M-K1K020F-S2	R88M-K1K020C	R88M-K1K020C-S2
		1.5 kW	R88M-K1K520F	R88M-K1K520F-S2	R88M-K1K520C	R88M-K1K520C-S2
		2 kW	R88M-K2K020F	R88M-K2K020F-S2	R88M-K2K020C	R88M-K2K020C-S2
		3 kW	R88M-K3K020F	R88M-K3K020F-S2	R88M-K3K020C	R88M-K3K020C-S2
		4 kW	R88M-K4K020F	R88M-K4K020F-S2	R88M-K4K020C	R88M-K4K020C-S2
		5 kW	R88M-K5K020F	R88M-K5K020F-S2	R88M-K5K020C	R88M-K5K020C-S2
With brakes	200 V	1 kW	R88M-K1K020H-B	R88M-K1K020H-BS2	R88M-K1K020T-B	R88M-K1K020T-BS2
		1.5 kW	R88M-K1K520H-B	R88M-K1K520H-BS2	R88M-K1K520T-B	R88M-K1K520T-BS2
		2 kW	R88M-K2K020H-B	R88M-K2K020H-BS2	R88M-K2K020T-B	R88M-K2K020T-BS2
		3 kW	R88M-K3K020H-B	R88M-K3K020H-BS2	R88M-K3K020T-B	R88M-K3K020T-BS2
		4 kW	R88M-K4K020H-B	R88M-K4K020H-BS2	R88M-K4K020T-B	R88M-K4K020T-BS2
		5 kW	R88M-K5K020H-B	R88M-K5K020H-BS2	R88M-K5K020T-B	R88M-K5K020T-BS2
	400 V	400 W	R88M-K40020F-B	R88M-K40020F-BS2	R88M-K40020C-B	R88M-K40020C-BS2
		600 W	R88M-K60020F-B	R88M-K60020F-BS2	R88M-K60020C-B	R88M-K60020C-BS2
		1 kW	R88M-K1K020F-B	R88M-K1K020F-BS2	R88M-K1K020C-B	R88M-K1K020C-BS2
		1.5 kW	R88M-K1K520F-B	R88M-K1K520F-BS2	R88M-K1K520C-B	R88M-K1K520C-BS2
		2 kW	R88M-K2K020F-B	R88M-K2K020F-BS2	R88M-K2K020C-B	R88M-K2K020C-BS2
		3 kW	R88M-K3K020F-B	R88M-K3K020F-BS2	R88M-K3K020C-B	R88M-K3K020C-BS2
		4 kW	R88M-K4K020F-B	R88M-K4K020F-BS2	R88M-K4K020C-B	R88M-K4K020C-BS2
		5 kW	R88M-K5K020F-B	R88M-K5K020F-BS2	R88M-K5K020C-B	R88M-K5K020C-BS2

Note. Models with oil seals are also available.

1,000-r/min Servomotors

Specifications			Model			
			With incremental encoder		With absolute encoder	
			Straight shaft without key	Straight shaft with key and tap	Straight shaft without key	Straight shaft with key and tap
Without brakes	200 V	900 kW	R88M-K90010H	R88M-K90010H-S2	R88M-K90010T	R88M-K90010T-S2
		2 kW	R88M-K2K010H	R88M-K2K010H-S2	R88M-K2K010T	R88M-K2K010T-S2
		3 kW	R88M-K3K010H	R88M-K3K010H-S2	R88M-K3K010T	R88M-K3K010T-S2
	400 V	900 kW	R88M-K90010F	R88M-K90010F-S2	R88M-K90010C	R88M-K90010C-S2
		2 kW	R88M-K2K010F	R88M-K2K010F-S2	R88M-K2K010C	R88M-K2K010C-S2
		3 kW	R88M-K3K010F	R88M-K3K010F-S2	R88M-K3K010C	R88M-K3K010C-S2
With brakes	200 V	900 kW	R88M-K90010H-B	R88M-K90010H-BS2	R88M-K90010T-B	R88M-K90010T-BS2
		2 kW	R88M-K2K010H-B	R88M-K2K010H-BS2	R88M-K2K010T-B	R88M-K2K010T-BS2
		3 kW	R88M-K3K010H-B	R88M-K3K010H-BS2	R88M-K3K010T-B	R88M-K3K010T-BS2
	400 V	900 kW	R88M-K90010F-B	R88M-K90010F-BS2	R88M-K90010C-B	R88M-K90010C-BS2
		2 kW	R88M-K2K010F-B	R88M-K2K010F-BS2	R88M-K2K010C-B	R88M-K2K010C-BS2
		3 kW	R88M-K3K010F-B	R88M-K3K010F-BS2	R88M-K3K010C-B	R88M-K3K010C-BS2

Note. Models with oil seals are also available.

Servo Drive and Servomotor Combination Tables

The tables in this section show the possible combinations of OMNUC G5-series Servo Drives and Servomotors. The Servomotors and Servo Drives can only be used in the listed combinations.
"-□" at the end of the motor model number is for options, such as the shaft type, brake, oil seal and key.

3,000-r/min Servomotors and Servo Drives

Voltage	Servomotor			Servo Drive
	Rated output	With incremental encoder	With absolute encoder	
Single-phase 100 V	50 W	R88M-K05030H-□	R88M-K05030T-□	R88D-KTA5L
	100 W	R88M-K10030L-□	R88M-K10030S-□	R88D-KT01L
Single-phase/ 3-phase 100 V	200 W	R88M-K20030L-□	R88M-K20030S-□	R88D-KT02L
	400 W	R88M-K40030L-□	R88M-K40030S-□	R88D-KT04L
Single-phase/ 3-phase 200 V	50 W	R88M-K05030H-□	R88M-K05030T-□	R88D-KT01H
	100 W	R88M-K10030H-□	R88M-K10030T-□	R88D-KT01H
	200 W	R88M-K20030H-□	R88M-K20030T-□	R88D-KT02H
	400 W	R88M-K40030H-□	R88M-K40030T-□	R88D-KT04H
	750 W	R88M-K75030H-□	R88M-K75030T-□	R88D-KT08H
	1 kW	R88M-K1K030H-□	R88M-K1K030T-□	R88D-KT15H
	1.5 kW	R88M-K1K530H-□	R88M-K1K530T-□	R88D-KT15H
3-phase 200 V	2 kW	R88M-K2K030H-□	R88M-K2K030T-□	R88D-KT20H
	3 kW	R88M-K3K030H-□	R88M-K3K030T-□	R88D-KT30H
	4 kW	R88M-K4K030H-□	R88M-K4K030T-□	R88D-KT50H
	5 kW	R88M-K5K030H-□	R88M-K5K030T-□	R88D-KT50H
3-phase 400 V	750 W	R88M-K75030F-□	R88M-K75030C-□	R88D-KT10F
	1 kW	R88M-K1K030F-□	R88M-K1K030C-□	R88D-KT15F
	1.5 kW	R88M-K1K530F-□	R88M-K1K530C-□	R88D-KT15F
	2 kW	R88M-K2K030F-□	R88M-K2K030C-□	R88D-KT20F
	3 kW	R88M-K3K030F-□	R88M-K3K030C-□	R88D-KT30F
	4 kW	R88M-K4K030F-□	R88M-K4K030C-□	R88D-KT50F
	5 kW	R88M-K5K030F-□	R88M-K5K030C-□	R88D-KT50F

2,000-r/min Servomotors and Servo Drives

Voltage	Servomotor			Servo Drive
	Rated output	With incremental encoder	With absolute encoder	
Single-phase/ 3-phase 200 V	1 kW	R88M-K1K020H-□	R88M-K1K020T-□	R88D-KT10H
	1.5 kW	R88M-K1K520H-□	R88M-K1K520T-□	R88D-KT15H
3-phase 200 V	2 kW	R88M-K2K020H-□	R88M-K2K020T-□	R88D-KT20H
	3 kW	R88M-K3K020H-□	R88M-K3K020T-□	R88D-KT30H
	4 kW	R88M-K4K020H-□	R88M-K4K020T-□	R88D-KT50H
	5 kW	R88M-K5K020H-□	R88M-K5K020T-□	R88D-KT50H
3-phase 400 V	400 W	R88M-K40020F-□	R88M-K40020C-□	R88D-KT06F
	600 W	R88M-K60020F-□	R88M-K60020C-□	R88D-KT06F
	1 kW	R88M-K1K020F-□	R88M-K1K020C-□	R88D-KT10F
	1.5 kW	R88M-K1K520F-□	R88M-K1K520C-□	R88D-KT15F
	2 kW	R88M-K2K020F-□	R88M-K2K020C-□	R88D-KT20F
	3 kW	R88M-K3K020F-□	R88M-K3K020C-□	R88D-KT30F
	4 kW	R88M-K4K020F-□	R88M-K4K020C-□	R88D-KT50F
	5 kW	R88M-K5K020F-□	R88M-K5K020C-□	R88D-KT50F

1,000-r/min Servomotors and Servo Drives

Voltage	Servomotor			Servo Drive
	Rated output	With incremental encoder	With absolute encoder	
Single-phase/3-phase 200 V	900 W	R88M-K90010H-□	R88M-K90010T-□	R88D-KT15H
3-phase 200 V	2 kW	R88M-K2K010H-□	R88M-K2K010T-□	R88D-KT30H
	3 kW	R88M-K3K010H-□	R88M-K3K010T-□	R88D-KT50H
Single-phase/3-phase 400 V	900 W	R88M-K90010F-□	R88M-K90010C-□	R88D-KT15F
3-phase 400 V	2 kW	R88M-K2K010F-□	R88M-K2K010C-□	R88D-KT30F
	3 kW	R88M-K3K010F-□	R88M-K3K010C-□	R88D-KT50F

Peripheral Equipment and Cable Model Tables

Encoder Cables (European Flexible Cables)

Specifications		Model
[100 V and 200 V] For 3,000-r/min Servomotors of 50 to 750 W (for both absolute encoders and incremental encoders)	1.5 m	R88A-CRKA001-5CR-E
	3 m	R88A-CRKA003CR-E
	5 m	R88A-CRKA005CR-E
	10 m	R88A-CRKA010CR-E
	15 m	R88A-CRKA015CR-E
	20 m	R88A-CRKA020CR-E
[100 V and 200 V] 3,000-r/min Servomotors of 1.0 kW or more For 2,000-r/min Servomotors For 1,000-r/min Servomotors [400 V] For 3,000-r/min Servomotors For 2,000-r/min Servomotors For 1,000-r/min Servomotors	1.5 m	R88A-CRKC001-5NR-E
	3 m	R88A-CRKC003NR-E
	5 m	R88A-CRKC005NR-E
	10 m	R88A-CRKC010NR-E
	15 m	R88A-CRKC015NR-E
	20 m	R88A-CRKC020NR-E

Motor Power Cables (European Flexible Cables)

Specifications		Model	
		For motor without brake	For motor with brake
[100 V and 200 V] For 3,000-r/min Servomotors of 50 to 750 W	1.5 m	R88A-CAKA001-5SR-E	(See note.)
	3 m	R88A-CAKA003SR-E	
	5 m	R88A-CAKA005SR-E	
	10 m	R88A-CAKA010SR-E	
	15 m	R88A-CAKA015SR-E	
	20 m	R88A-CAKA020SR-E	
[200 V] For 3,000-r/min Servomotors of 1 to 2 kW For 2,000-r/min Servomotors of 1 to 2 kW For 1,000-r/min Servomotors of 900 W	1.5 m	R88A-CAGB001-5SR-E	R88A-CAGB001-5BR-E
	3 m	R88A-CAGB003SR-E	R88A-CAGB003BR-E
	5 m	R88A-CAGB005SR-E	R88A-CAGB005BR-E
	10 m	R88A-CAGB010SR-E	R88A-CAGB010BR-E
	15 m	R88A-CAGB015SR-E	R88A-CAGB015BR-E
	20 m	R88A-CAGB020SR-E	R88A-CAGB020BR-E
[400 V] For 3,000-r/min Servomotors of 750 W to 2 kW For 2,000-r/min Servomotors of 400 W to 2 kW For 1,000-r/min Servomotors of 900 W	1.5 m	R88A-CAGB001-5SR-E	R88A-CAKF001-5BR-E
	3 m	R88A-CAGB003SR-E	R88A-CAKF003BR-E
	5 m	R88A-CAGB005SR-E	R88A-CAKF005BR-E
	10 m	R88A-CAGB010SR-E	R88A-CAKF010BR-E
	15 m	R88A-CAGB015SR-E	R88A-CAKF015BR-E
	20 m	R88A-CAGB020SR-E	R88A-CAKF020BR-E
For 3,000-r/min Servomotors of 3 to 5 kW For 2,000-r/min Servomotors of 3 to 5 kW For 1,000-r/min Servomotors of 2 to 3 kW	1.5 m	R88A-CAGD001-5SR-E	R88A-CAGD001-5BR-E
	3 m	R88A-CAGD003SR-E	R88A-CAGD003BR-E
	5 m	R88A-CAGD005SR-E	R88A-CAGD005BR-E
	10 m	R88A-CAGD010SR-E	R88A-CAGD010BR-E
	15 m	R88A-CAGD015SR-E	R88A-CAGD015BR-E
	20 m	R88A-CAGD020SR-E	R88A-CAGD020BR-E

Note: It requires both, the power cable R88A-CAKA□□□SR-E and the separate brake cable R88A-CAKA□□□BR-E. For the separate brake cable selection, see brake cables table in page 2-14.

Brake Cables (European Flexible Cables)

Specifications		Model
[100 V and 200 V] For 3,000-r/min Servomotors of 50 to 750 W	1.5 m	R88A-CAKA001-5BR-E
	3 m	R88A-CAKA003BR-E
	5 m	R88A-CAKA005BR-E
	10 m	R88A-CAKA010BR-E
	15 m	R88A-CAKA015BR-E
	20 m	R88A-CAKA020BR-E

Encoder Cables (Global Non-Flexible Cables)

Specifications		Model
[100 V and 200 V] For 3,000-r/min Servomotors of 50 to 750 W (for both absolute encoders and incremental encoders)	3 m	R88A-CRKA003C
	5 m	R88A-CRKA005C
	10 m	R88A-CRKA010C
	15 m	R88A-CRKA015C
	20 m	R88A-CRKA020C
	30 m	R88A-CRKA030C
	40 m	R88A-CRKA040C
	50 m	R88A-CRKA050C
[100 V and 200 V] 3,000-r/min Servomotors of 1.0 kW or more For 2,000-r/min Servomotors For 1,000-r/min Servomotors [400 V] For 3,000-r/min Servomotors For 2,000-r/min Servomotors For 1,000-r/min Servomotors	3 m	R88A-CRKC003N
	5 m	R88A-CRKC005N
	10 m	R88A-CRKC010N
	15 m	R88A-CRKC015N
	20 m	R88A-CRKC020N
	30 m	R88A-CRKC030N
	40 m	R88A-CRKC040N
	50 m	R88A-CRKC050N

Motor Power Cables (Global Non-Flexible Cables)

Specifications		Model	
		For motor without brake	For motor with brake
[100 V and 200 V] For 3,000-r/min Servomotors of 50 to 750 W	3 m	R88A-CAKA003S	(See note.)
	5 m	R88A-CAKA005S	
	10 m	R88A-CAKA010S	
	15 m	R88A-CAKA015S	
	20 m	R88A-CAKA020S	
	30 m	R88A-CAKA030S	
	40 m	R88A-CAKA040S	
	50 m	R88A-CAKA050S	
[200 V] For 3,000-r/min Servomotors of 1 to 2 kW For 2,000-r/min Servomotors of 1 to 2 kW For 1,000-r/min Servomotors of 900 W	3 m	R88A-CAGB003S	R88A-CAGB003B
	5 m	R88A-CAGB005S	R88A-CAGB005B
	10 m	R88A-CAGB010S	R88A-CAGB010B
	15 m	R88A-CAGB015S	R88A-CAGB015B
	20 m	R88A-CAGB020S	R88A-CAGB020B
	30 m	R88A-CAGB030S	R88A-CAGB030B
	40 m	R88A-CAGB040S	R88A-CAGB040B
	50 m	R88A-CAGB050S	R88A-CAGB050B
[400 V] For 3,000-r/min Servomotors of 750 W to 2 kW For 2,000-r/min Servomotors of 400 W to 2 kW For 1,000-r/min Servomotors of 900 W	3 m	R88A-CAGB003S	R88A-CAKF003B
	5 m	R88A-CAGB005S	R88A-CAKF005B
	10 m	R88A-CAGB010S	R88A-CAKF010B
	15 m	R88A-CAGB015S	R88A-CAKF015B
	20 m	R88A-CAGB020S	R88A-CAKF020B
	30 m	R88A-CAGB030S	R88A-CAKF030B
	40 m	R88A-CAGB040S	R88A-CAKF040B
	50 m	R88A-CAGB050S	R88A-CAKF050B
For 3,000-r/min Servomotors of 3 to 5 kW For 2,000-r/min Servomotors of 3 to 5 kW For 1,000-r/min Servomotors of 2 to 3 kW	3 m	R88A-CAGD003S	R88A-CAGD003B
	5 m	R88A-CAGD005S	R88A-CAGD005B
	10 m	R88A-CAGD010S	R88A-CAGD010B
	15 m	R88A-CAGD015S	R88A-CAGD015B
	20 m	R88A-CAGD020S	R88A-CAGD020B
	30 m	R88A-CAGD030S	R88A-CAGD030B
	40 m	R88A-CAGD040S	R88A-CAGD040B
	50 m	R88A-CAGD050S	R88A-CAGD050B

Note: It requires both, the power cable R88A-CAKA□□□S and the separate brake cable R88A-CAKA□□□B. For the separate brake cable selection, see brake cables table in page 2-16.

Brake Cables (Global Non-Flexible Cables)

Specifications		Model
[100 V and 200 V] For 3,000-r/min Servomotors of 50 to 750 W	3 m	R88A-CAKA003B
	5 m	R88A-CAKA005B
	10 m	R88A-CAKA010B
	15 m	R88A-CAKA015B
	20 m	R88A-CAKA020B
	30 m	R88A-CAKA030B
	40 m	R88A-CAKA040B
	50 m	R88A-CAKA050B

Encoder Cables (Global Flexible Cables)

Specifications		Model
[100 V and 200 V] For 3,000-r/min Servomotors of 50 to 750 W (for both absolute encoders and incremental encoders)	3 m	R88A-CRKA003CR
	5 m	R88A-CRKA005CR
	10 m	R88A-CRKA010CR
	15 m	R88A-CRKA015CR
	20 m	R88A-CRKA020CR
	30 m	R88A-CRKA030CR
	40 m	R88A-CRKA040CR
	50 m	R88A-CRKA050CR
[100 V and 200 V] 3,000-r/min Servomotors of 1.0 kW or more For 2,000-r/min Servomotors For 1,000-r/min Servomotors [400 V] For 3,000-r/min Servomotors For 2,000-r/min Servomotors For 1,000-r/min Servomotors	3 m	R88A-CRKC003NR
	5 m	R88A-CRKC005NR
	10 m	R88A-CRKC010NR
	15 m	R88A-CRKC015NR
	20 m	R88A-CRKC020NR
	30 m	R88A-CRKC030NR
	40 m	R88A-CRKC040NR
	50 m	R88A-CRKC050NR

Motor Power Cables (Global Flexible Cables)

Specifications		Model	
		For motor without brake	For motor with brake
[100 V and 200 V] For 3,000-r/min Servomotors of 50 to 750 W	3 m	R88A-CAKA003SR	(See note.)
	5 m	R88A-CAKA005SR	
	10 m	R88A-CAKA010SR	
	15 m	R88A-CAKA015SR	
	20 m	R88A-CAKA020SR	
	30 m	R88A-CAKA030SR	
	40 m	R88A-CAKA040SR	
	50 m	R88A-CAKA050SR	
[200 V] For 3,000-r/min Servomotors of 1 to 2 kW For 2,000-r/min Servomotors of 1 to 2 kW For 1,000-r/min Servomotors of 900 W	3 m	R88A-CAGB003SR	R88A-CAGB003BR
	5 m	R88A-CAGB005SR	R88A-CAGB005BR
	10 m	R88A-CAGB010SR	R88A-CAGB010BR
	15 m	R88A-CAGB015SR	R88A-CAGB015BR
	20 m	R88A-CAGB020SR	R88A-CAGB020BR
	30 m	R88A-CAGB030SR	R88A-CAGB030BR
	40 m	R88A-CAGB040SR	R88A-CAGB040BR
	50 m	R88A-CAGB050SR	R88A-CAGB050BR
[400 V] For 3,000-r/min Servomotors of 750 W to 2 kW For 2,000-r/min Servomotors of 400 W to 2 kW For 1,000-r/min Servomotors of 900 W	3 m	R88A-CAGB003SR	R88A-CAKF003BR
	5 m	R88A-CAGB005SR	R88A-CAKF005BR
	10 m	R88A-CAGB010SR	R88A-CAKF010BR
	15 m	R88A-CAGB015SR	R88A-CAKF015BR
	20 m	R88A-CAGB020SR	R88A-CAKF020BR
	30 m	R88A-CAGB030SR	R88A-CAKF030BR
	40 m	R88A-CAGB040SR	R88A-CAKF040BR
	50 m	R88A-CAGB050SR	R88A-CAKF050BR
For 3,000-r/min Servomotors of 3 to 5 kW For 2,000-r/min Servomotors of 3 to 5 kW For 1,000-r/min Servomotors of 2 to 3 kW	3 m	R88A-CAGD003SR	R88A-CAGD003BR
	5 m	R88A-CAGD005SR	R88A-CAGD005BR
	10 m	R88A-CAGD010SR	R88A-CAGD010BR
	15 m	R88A-CAGD015SR	R88A-CAGD015BR
	20 m	R88A-CAGD020SR	R88A-CAGD020BR
	30 m	R88A-CAGD030SR	R88A-CAGD030BR
	40 m	R88A-CAGD040SR	R88A-CAGD040BR
	50 m	R88A-CAGD050SR	R88A-CAGD050BR

Note: It requires both, the power cable R88A-CAKA□□□SR and the separate brake cable R88A-CAKA□□□BR. For the separate brake cable selection, see brake cables table in page 2-18.

Brake Cables (Global Flexible Cables)

Specifications		Model
[100 V and 200 V] For 3,000-r/min Servomotors of 50 to 750 W	3 m	R88A-CAKA003BR
	5 m	R88A-CAKA005BR
	10 m	R88A-CAKA010BR
	15 m	R88A-CAKA015BR
	20 m	R88A-CAKA020BR
	30 m	R88A-CAKA030BR
	40 m	R88A-CAKA040BR
	50 m	R88A-CAKA050BR

Absolute Encoder Battery Cables

Specifications		Model
Absolute Encoder Battery Cable (battery not supplied)	0.3 m	R88A-CRGD0R3C
Absolute Encoder Battery Cable (R88A-BAT01G battery × 1 supplied)	0.3 m	R88A-CRGD0R3C-BS

Analog Monitor Cable

Specifications		Model
Analog monitor cable	1 m	R88A-CMK001S

Absolute Encoder Backup Battery

Specifications	Model
2,000 mA•h 3.6 V	R88A-BAT01G

Connectors

Specifications		Model
Motor connector for encoder cable	[100 V and 200 V] For 3,000-r/min of 50 to 750 W	R88A-CNK02R
	[100 V and 200 V] For 3,000-r/min of 1 to 5 kW For 2,000 r/min, 1,000 r/min [400 V] For 3,000 r/min, 2,000 r/min and 1,000 r/min	R88A-CNK04R
Control I/O connector (CN1)		R88A-CNU11C
Encoder connector (CN2)		R88A-CNW01R
External encoder connector (CN4)		R88A-CNK41L
Safety connector (CN8)		R88A-CNK81S
Power cable connector (for 750 W max.)		R88A-CNK11A
Brake cable connector (for 750 W max.)		R88A-CNK11B

Servo Relay Units (for CN1)

Specifications		Model
Servo Relay Unit	For CS1W-NC113/-NC133 For CJ1W-NC113/-NC133 For C200HW-NC113	XW2B-20J6-1B
	For CS1W-NC213/-NC413/-NC233/-NC433 For CJ1W-NC213/-NC413/-NC233/-NC433 For C200HW-NC213/-NC413	XW2B-40J6-2B
	For CJ1M-CPU21/-CPU22/-CPU23	XW2B-20J6-8A XW2B-40J6-9A
	For CQM1-CPU43-V1 For CQM1H-PLB21	XW2B-20J6-3B

Servo Relay Unit Cables for Servo Drives

Specifications			Model
Servo Drive cables	For CS1W-NC113/-NC133, CJ1W-NC113/-NC133, C200HW-NC113 (XW2B-20J6-1B) For CS1W-NC213/-NC413/-NC233/-NC433, CJ1W-NC213/-NC413/-NC233/-NC433, C200HW-NC213/-NC413 (XW2B-40J6-2B) For CQM1-CPU43-V1 or CQM1H-PLB21 (XW2B-20J6-3B)	1 m	XW2Z-100J-B25
		2 m	XW2Z-200J-B25
	For CJ1M-CPU21/-CPU22/-CPU23 (XW2B-20J6-8A/XW2B-40J6-9A)	1 m	XW2Z-100J-B31
		2 m	XW2Z-200J-B31

Servo Relay Unit Cables for Position Control Units

Specifications			Model
Position Control Unit cables	For CQM1H-PLB21 (XW2B-20J6-3B)	0.5 m	XW2Z-050J-A3
		1 m	XW2Z-100J-A3
	For CS1W-NC113, C200HW-NC113 (XW2B-20J6-1B)	0.5 m	XW2Z-050J-A6
		1 m	XW2Z-100J-A6
	For CS1W-NC213/-NC413, C200HW-NC213/-NC413 (XW2B-20J6-2B)	0.5 m	XW2Z-050J-A7
		1 m	XW2Z-100J-A7
	For CS1W-NC133 (XW2B-20J6-1B)	0.5 m	XW2Z-050J-A10
		1 m	XW2Z-100J-A10
	For CS1W-NC233/-NC433 (XW2B-20J6-2B)	0.5 m	XW2Z-050J-A11
		1 m	XW2Z-100J-A11
	For CJ1W-NC113 (XW2B-20J6-1B)	0.5 m	XW2Z-050J-A14
		1 m	XW2Z-100J-A14
	For CJ1W-NC213/-NC413 (XW2B-20J6-2B)	0.5 m	XW2Z-050J-A15
		1 m	XW2Z-100J-A15
	For CJ1W-NC133 (XW2B-20J6-1B)	0.5 m	XW2Z-050J-A18
		1 m	XW2Z-100J-A18
	For CJ1W-NC233/-NC433 (XW2B-20J6-2B)	0.5 m	XW2Z-050J-A19
		1 m	XW2Z-100J-A19
	For CJ1M-CPU21/-CPU22/-CPU23 (XW2B-20J6-8A/XW2B-40J6-9A)	0.5 m	XW2Z-050J-A33
		1 m	XW2Z-100J-A33

Control Cables

Specifications			Model
Specified cables for Position Control Unit (line-driver output for 1 axis) CJ1W-NC234/-NC434		1 m	XW2Z-100J-G9
		5 m	XW2Z-500J-G9
		10 m	XW2Z-10MJ-G9
Specified cables for Position Control Unit (open collector output for 1 axis) CJ1W-NC214/-NC414		1 m	XW2Z-100J-G13
		3 m	XW2Z-300J-G13
Specified cables for Position Control Unit (line-driver output for 2 axes) CJ1W-NC234/-NC434		1 m	XW2Z-100J-G1
		5 m	XW2Z-500J-G1
		10 m	XW2Z-10MJ-G1
Specified cables for Position Control Unit (open collector output for 2 axes) CJ1W-NC214/-NC414		1 m	XW2Z-100J-G5
		3 m	XW2Z-300J-G5
Specified cables for Motion Control Unit (for 1 axis) CS1W-MC221-V1/-MC421-V1		1 m	R88A-CPG001M1
		2 m	R88A-CPG002M1
		3 m	R88A-CPG003M1
		5 m	R88A-CPG005M1
Specified cables for Motion Control Unit (for 2 axes) CS1W-MC221-V1/-MC421-V1		1 m	R88A-CPG001M2
		2 m	R88A-CPG002M2
		3 m	R88A-CPG003M2
		5 m	R88A-CPG005M2
General control cables (with connector on one end)		1 m	R88A-CPG001S
		2 m	R88A-CPG002S
Connector-terminal block cables		1 m	XW2Z-100J-B24
		2 m	XW2Z-200J-B24
Connector-terminal block	M3 screw and for pin terminals		XW2B-50G4
	M3.5 screw and for fork/ round terminals		XW2B-50G5
	M3 screw and for fork/round terminals		XW2D-50G6

External Regeneration Resistors

Specifications	Model
Regeneration process capacity: 20 W, 50 Ω (with 150°C thermal sensor)	R88A-RR08050S
Regeneration process capacity: 20 W, 100 Ω (with 150°C thermal sensor)	R88A-RR080100S
Regeneration process capacity: 70 W, 47 Ω (with 150°C thermal sensor)	R88A-RR22047S1
Regeneration process capacity: 70 W, 47 Ω (with 170°C thermal sensor)	R88A-RR22047S
Regeneration process capacity: 180 W, 20 Ω (with 200°C thermal sensor)	R88A-RR50020S

Mounting Brackets (L-Brackets for Rack Mounting)

Specifications	Model
R88D-KTA5L/-KT01L/-KT01H/-KT02H	R88A-TK01K
R88D-KT02L/-KT04H	R88A-TK02K
R88D-KT04L/-KT08H	R88A-TK03K
R88D-KT10H/-KT15H/-KT06F/-KT10F/-KT15F	R88A-TK04K

2-4 External and Mounting Dimensions

Servo Drive Dimensions

Single-phase 100 VAC: R88D-KTA5L/-KT01L (50 to 100 W)
Single-phase/3-phase 200 VAC: R88D-KT01H/-KT02H (100 to 200 W)

Wall Mounting

External dimensions

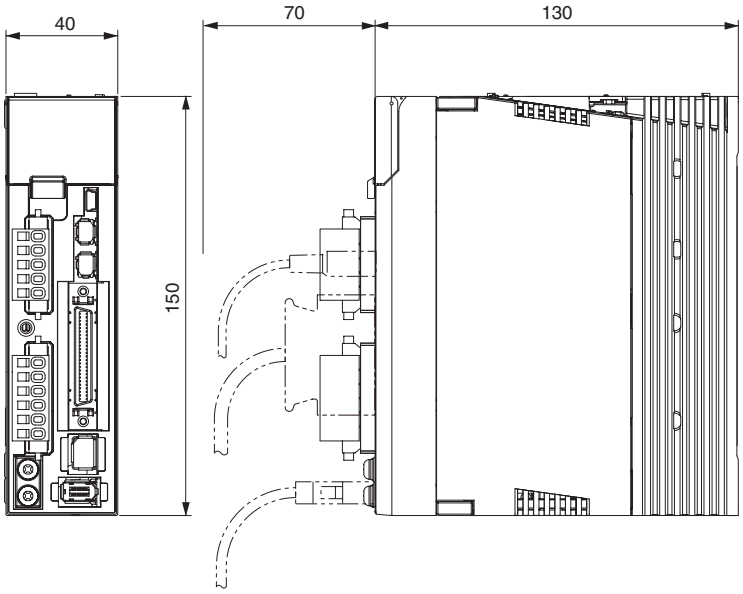

Mounting dimensions

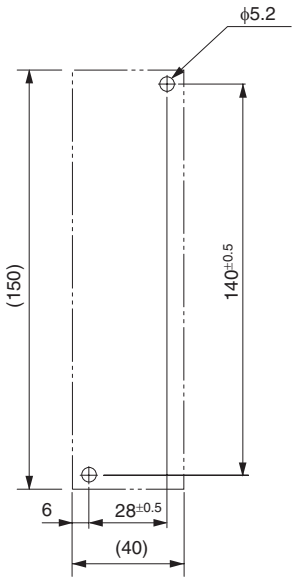

Front Mounting (Using Front Mounting Brackets)

External dimensions

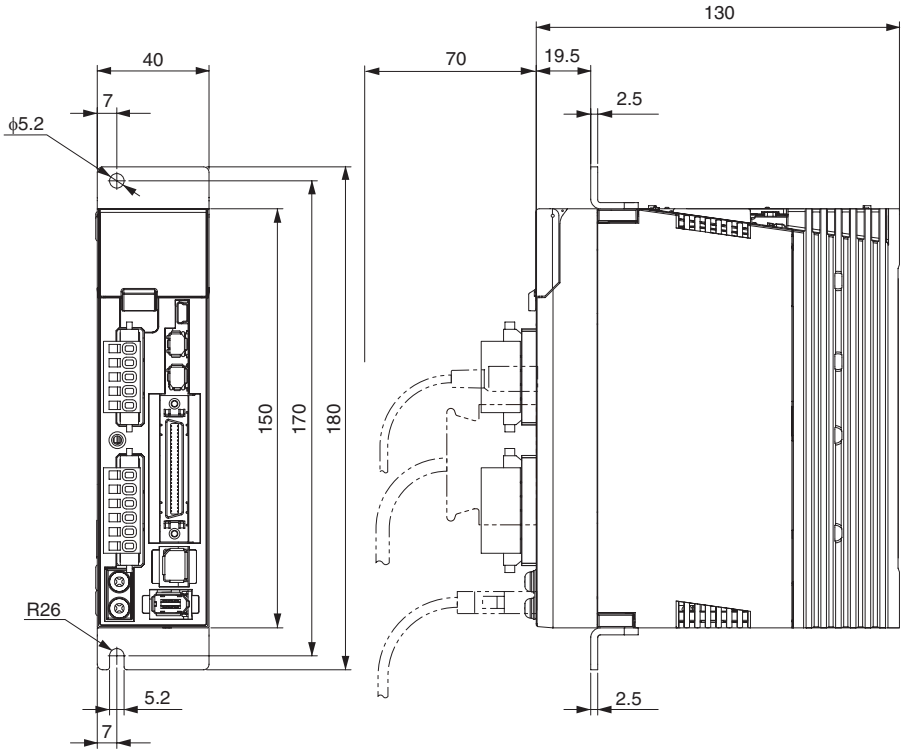

Mounting dimensions

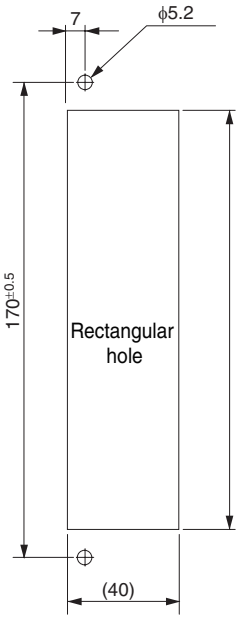

Single-phase/3-phase 100 VAC: R88D-KT02L (200 W)
Single-phase/3-phase 200 VAC: R88D-KT04H (400 W)

Wall Mounting

External dimensions

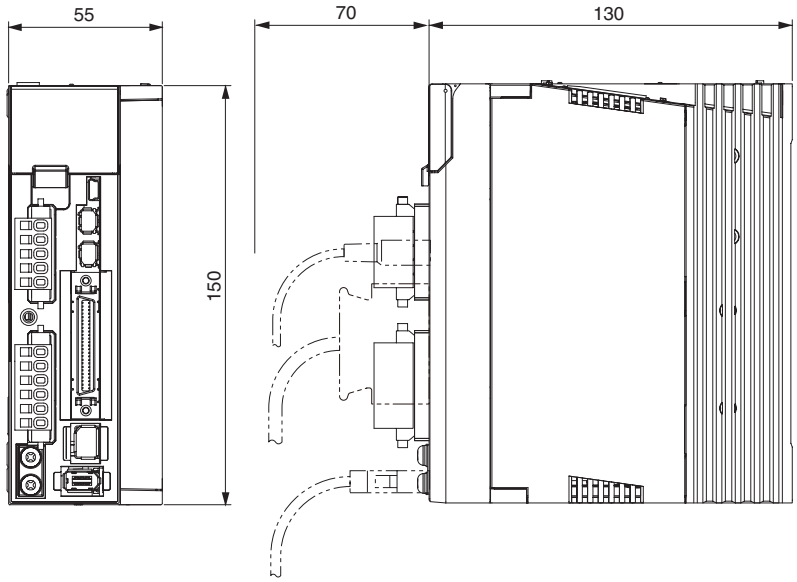

Mounting dimensions

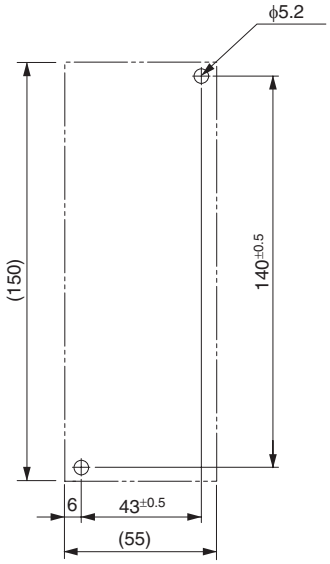

Front Mounting (Using Front Mounting Brackets)

External dimensions

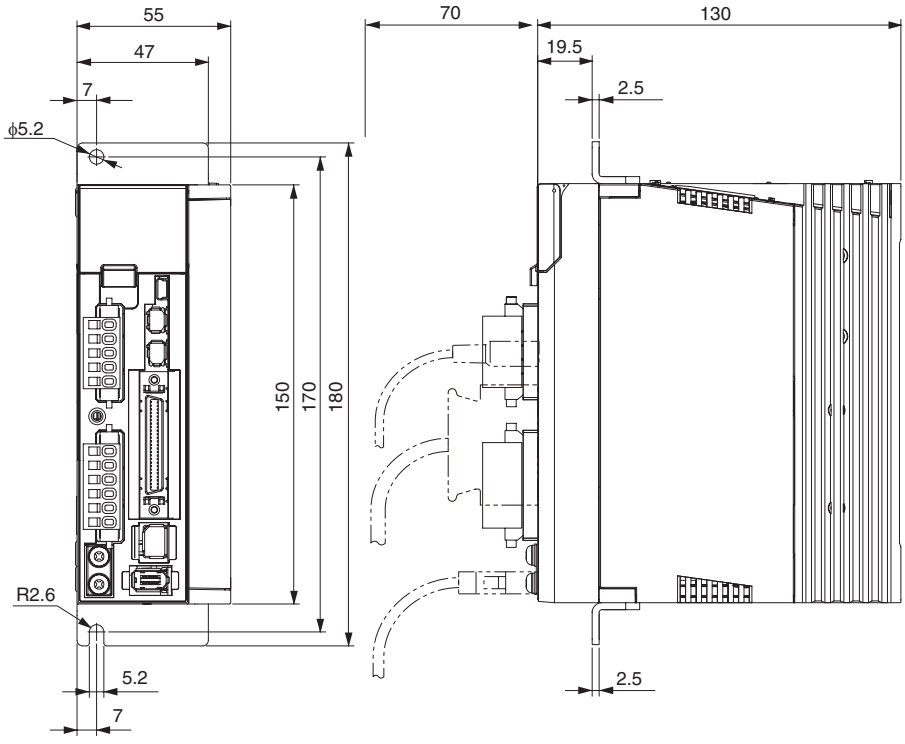

Mounting dimensions

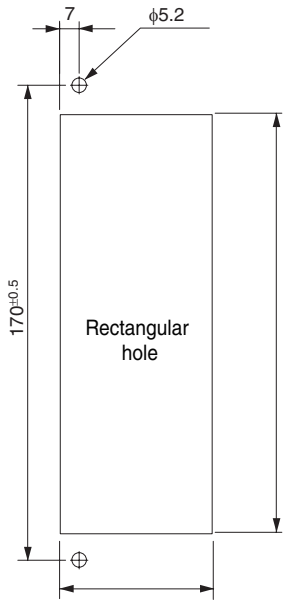

Single-phase/3-phase 100 VAC: R88D-KT04L (400 W)
Single-phase/3-phase 200 VAC: R88D-KT08H (750 W)

Wall Mounting

External dimensions

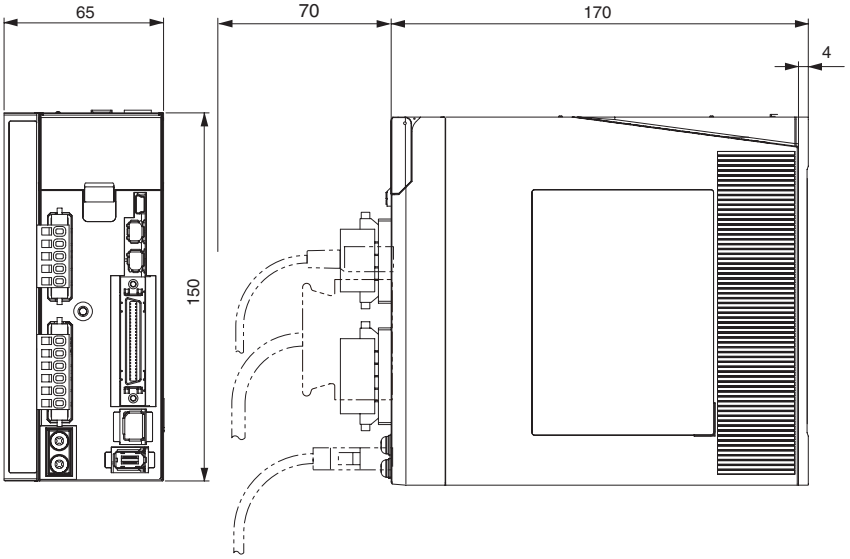

Mounting dimensions

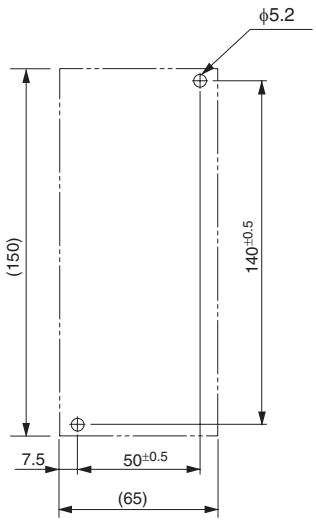

Front Mounting (Using Front Mounting Brackets)

External dimensions

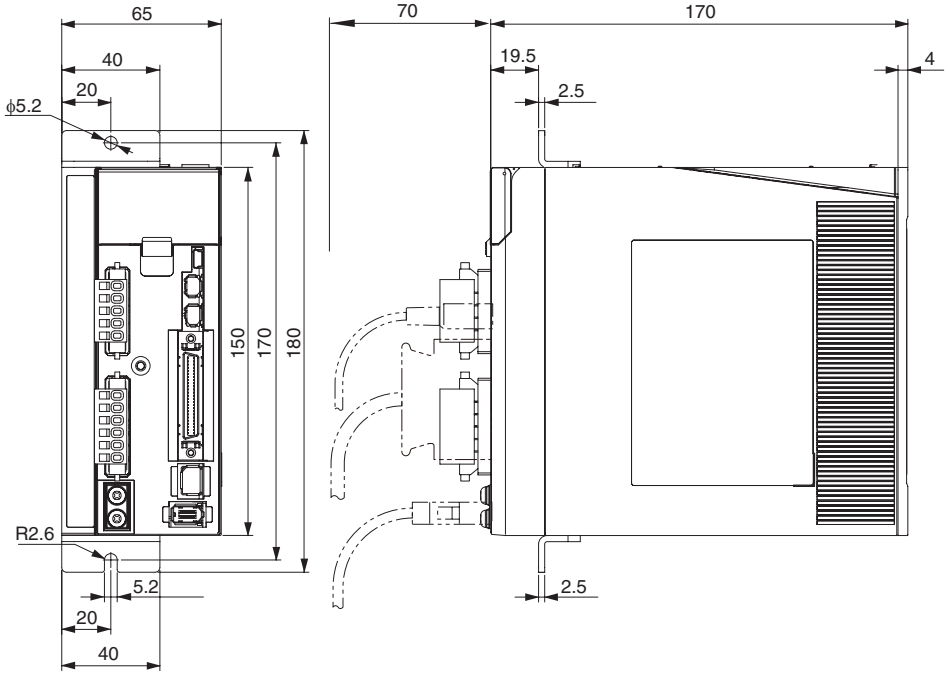

Mounting dimensions

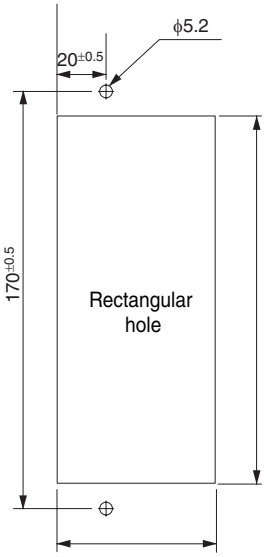

Single-phase/3-phase 200 VAC: R88D-KT10H/-KT15H (900 W to 1.5 kW)

Wall Mounting

External dimensions

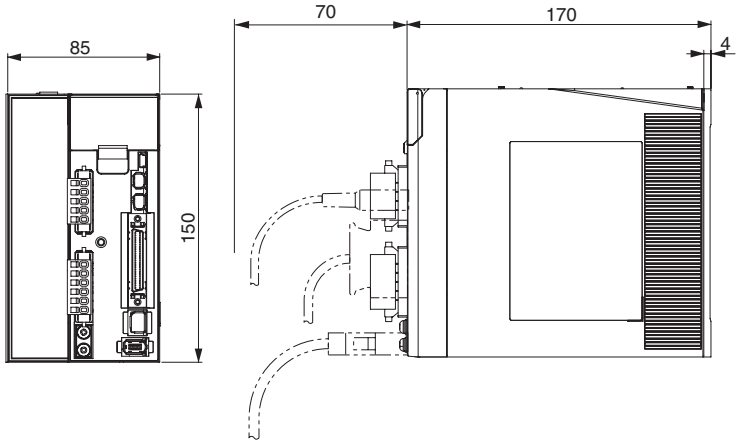

Mounting dimensions

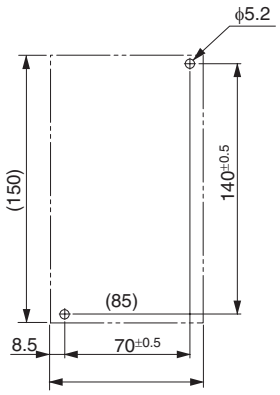

Front Mounting (Using Front Mounting Brackets)

External dimensions

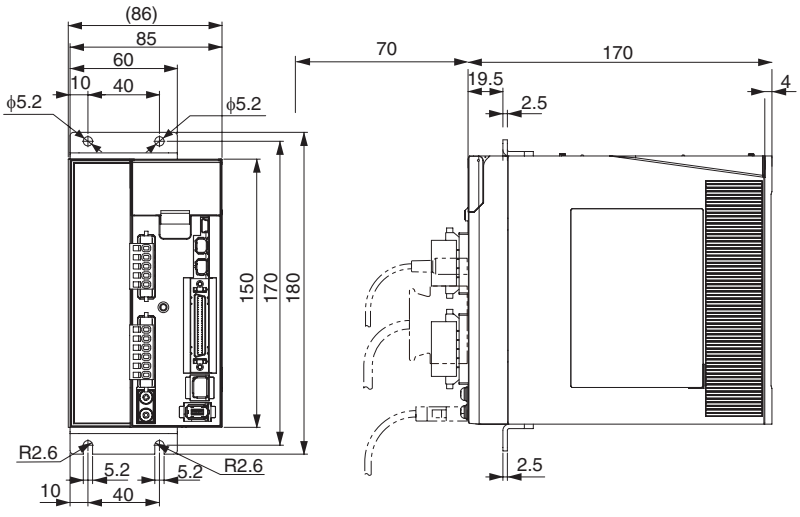

Mounting dimensions

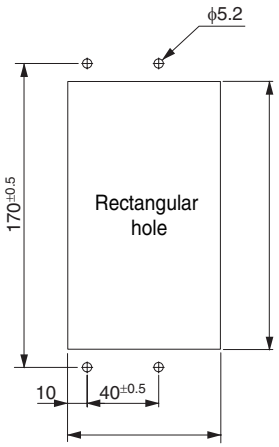

3-phase 200 VAC: R88D-KT20H (2 kW)

Wall Mounting

External dimensions

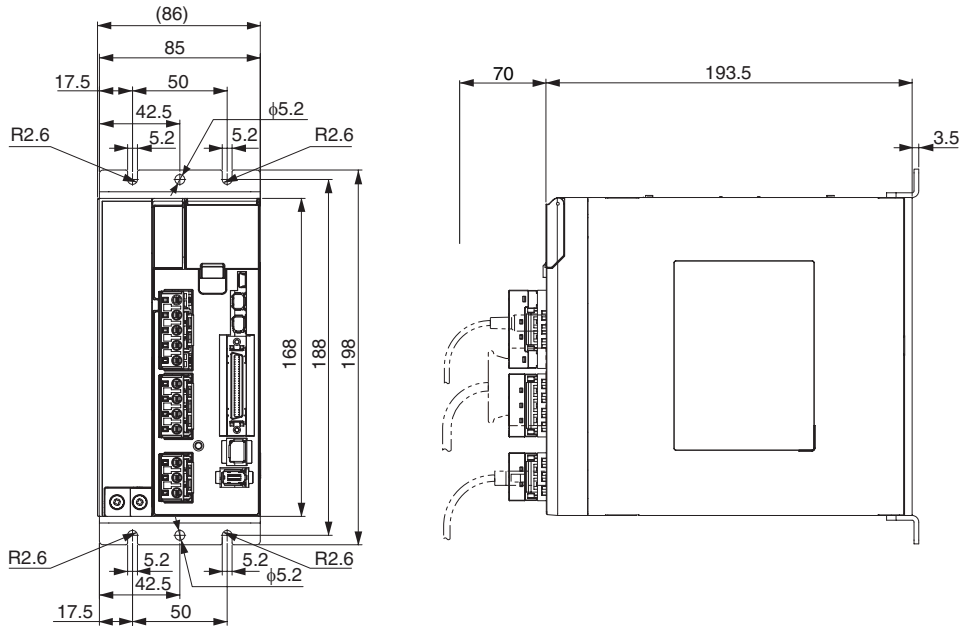

Mounting dimensions

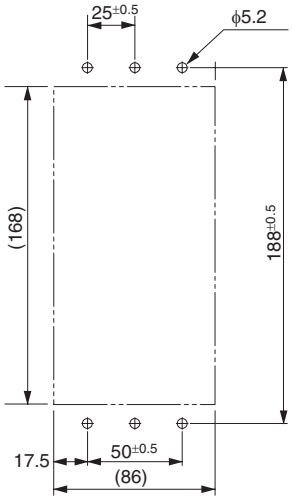

Front Mounting (Using Front Mounting Brackets)

External dimensions

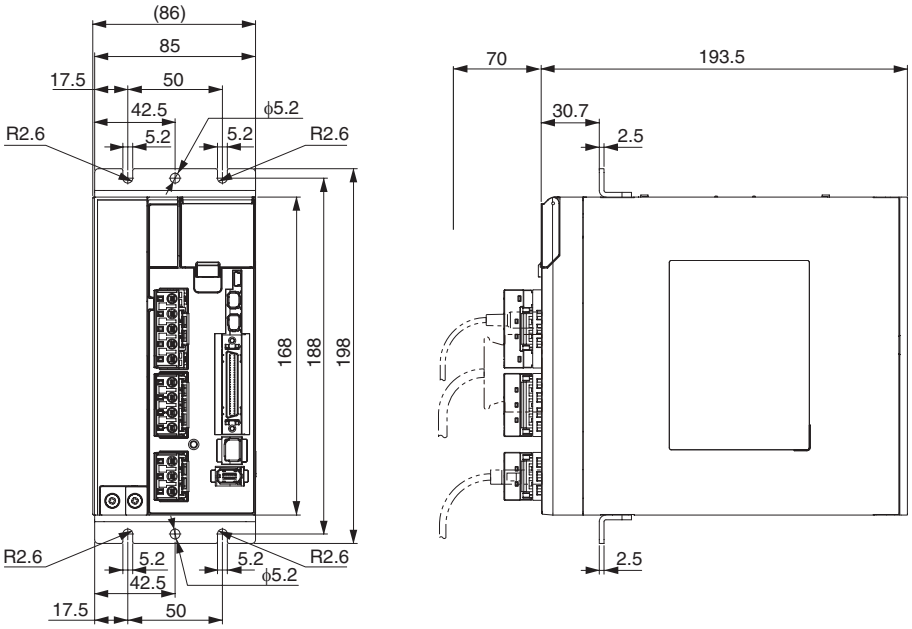

Mounting dimensions

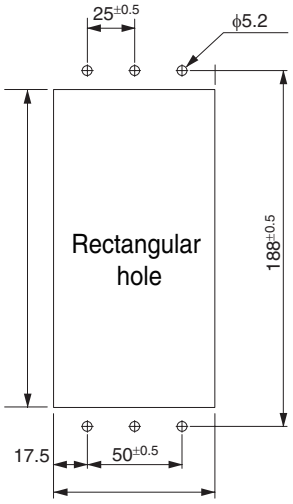

3-phase 200 VAC: R88D-KT30H/-KT50H (3 to 5 kW)

Wall Mounting

External dimensions

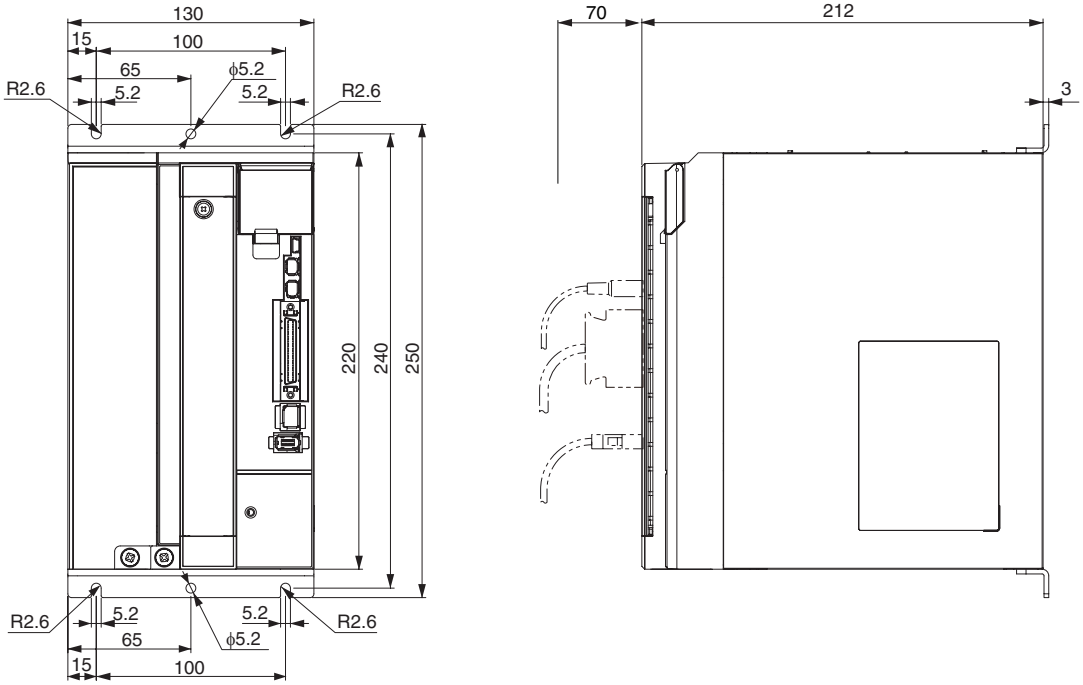

Mounting dimensions

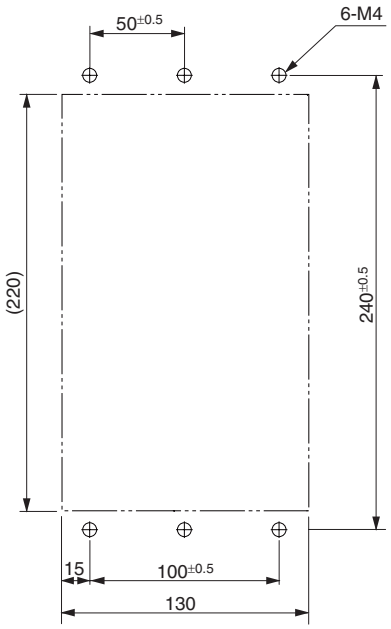

Front Mounting (Using Front Mounting Brackets)

External dimensions

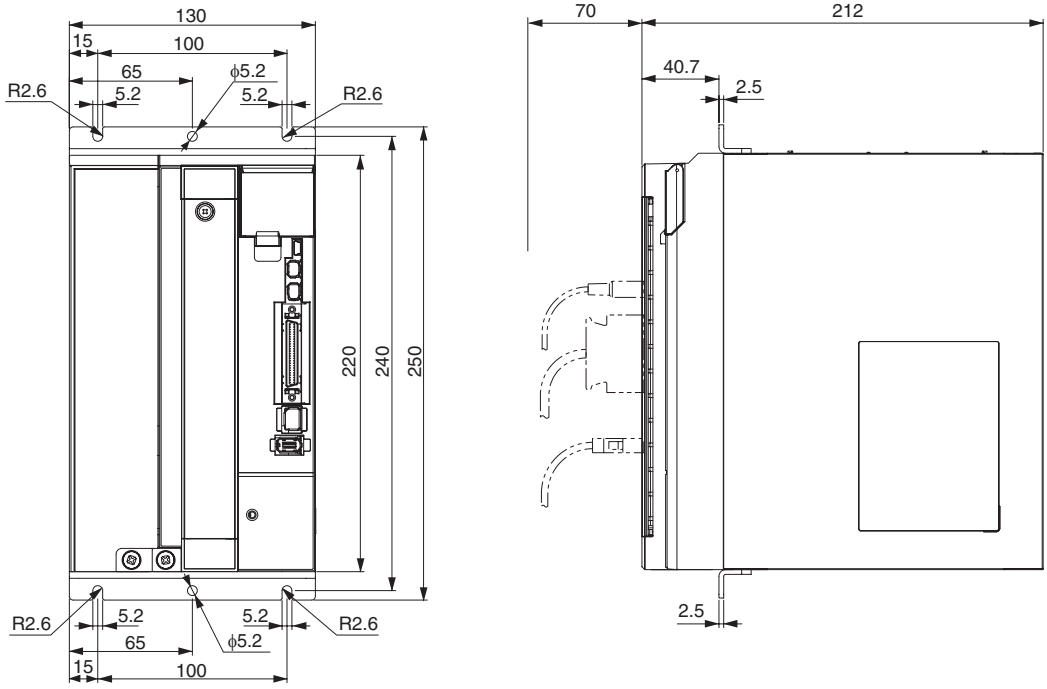

Mounting dimensions

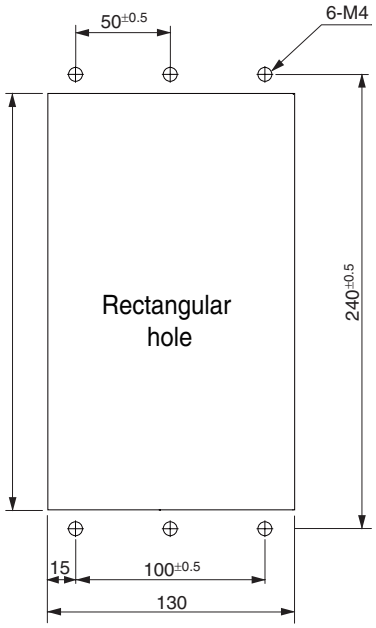

3-phase 400 VAC: R88D-KT06F/-KT10F/-KT15F (600 W to 1.5 kW)

Wall Mounting

External dimensions

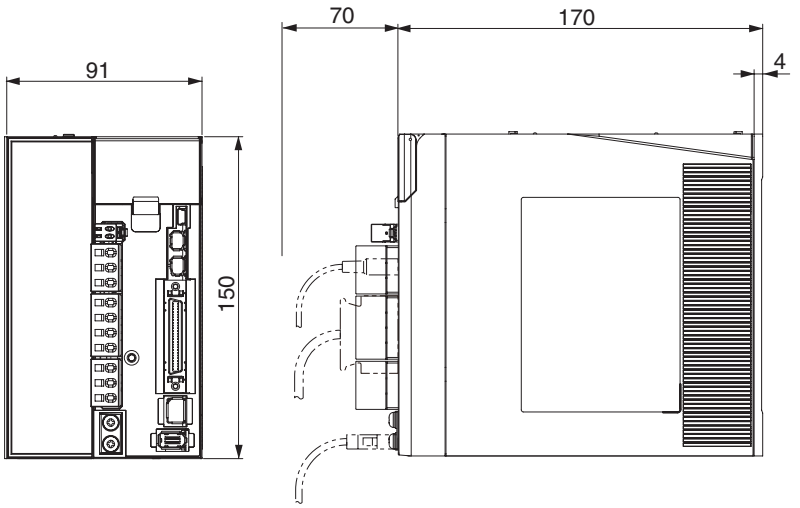

Mounting dimensions

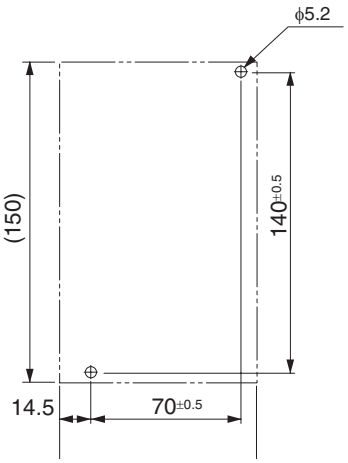

Front Mounting (Using Front Mounting Brackets)

External dimensions

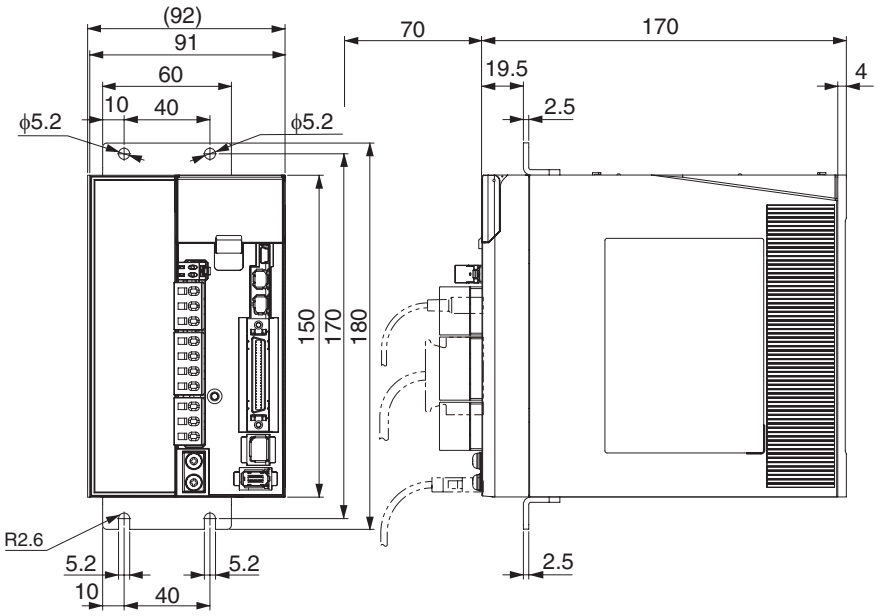

Mounting dimensions

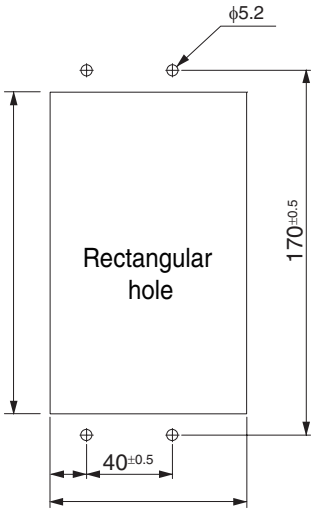

3-phase 400 VAC: R88D-KT20F (2 kW)

Wall Mounting

External dimensions

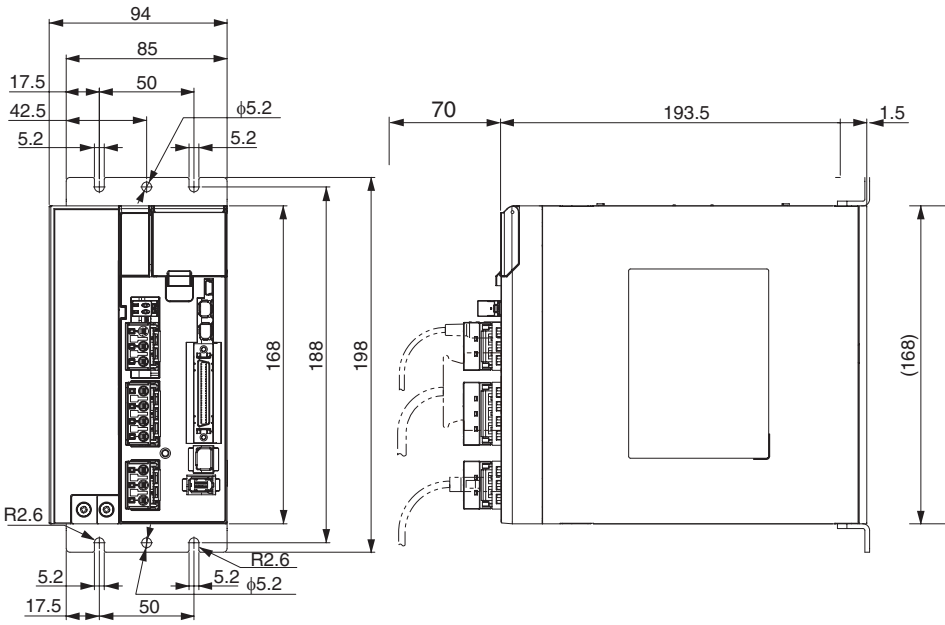

Mounting dimensions

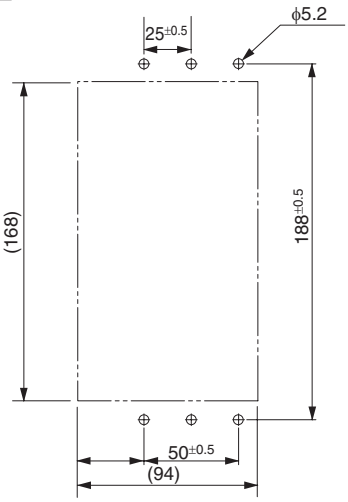

Front Mounting (Using Front Mounting Brackets)

External dimensions

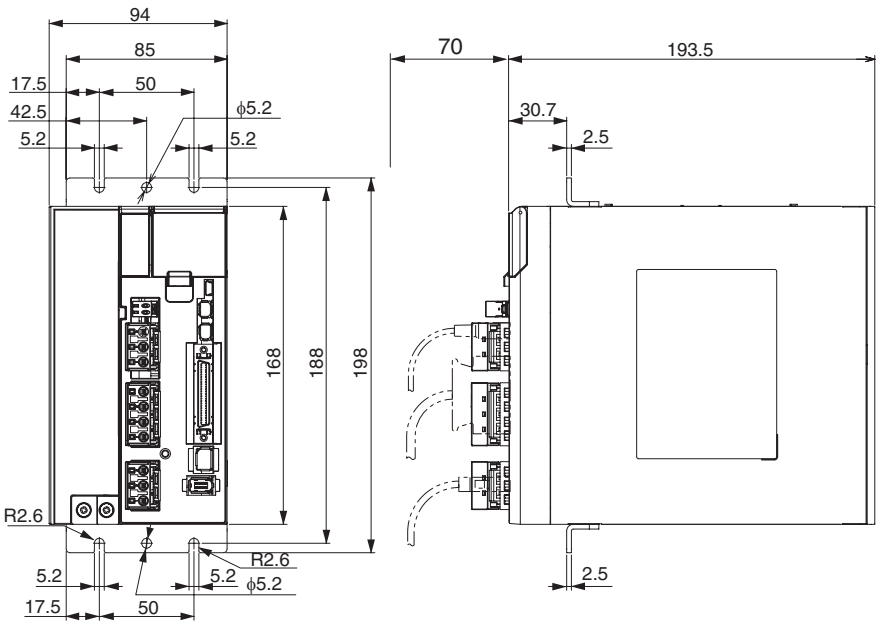

Mounting dimensions

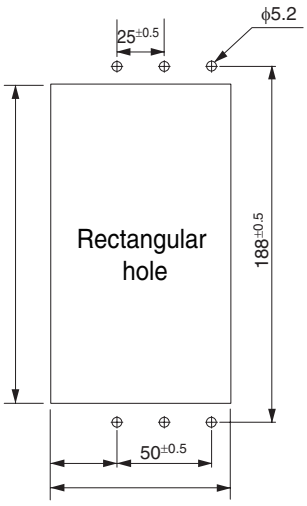

3-phase 400 VAC: R88D-KT30F/-KT50F (3 to 5 kW)

Wall Mounting

External dimensions

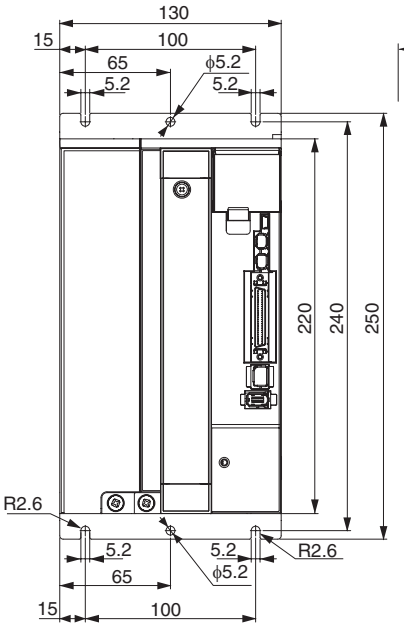

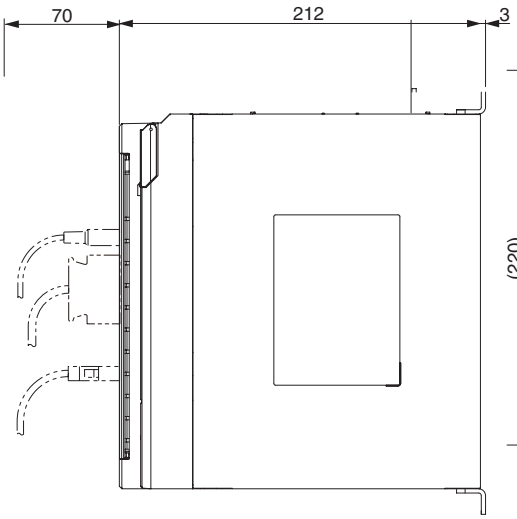

Mounting dimensions

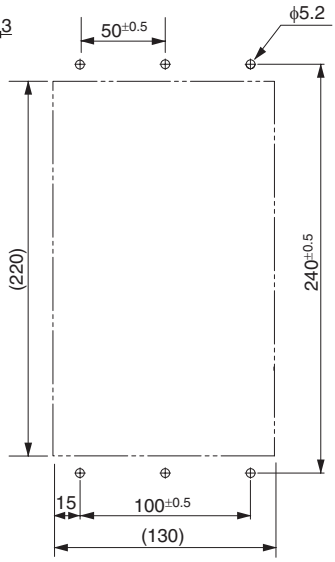

Front Mounting (Using Front Mounting Brackets)

External dimensions

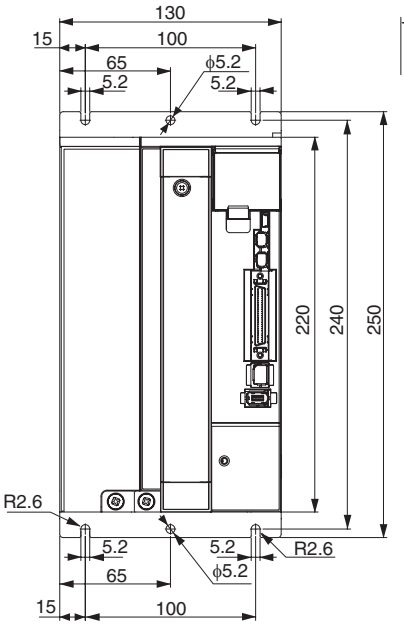

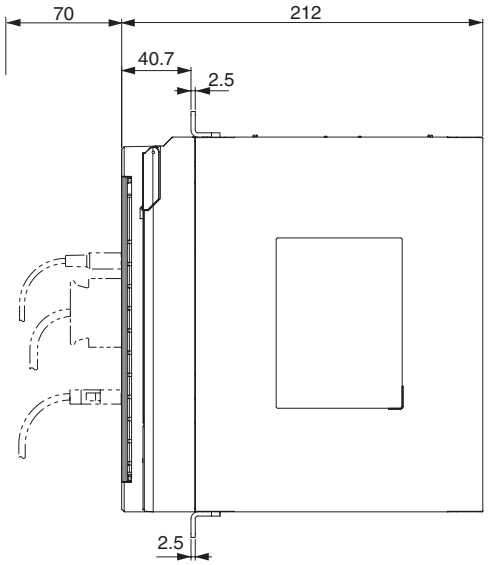

Mounting dimensions

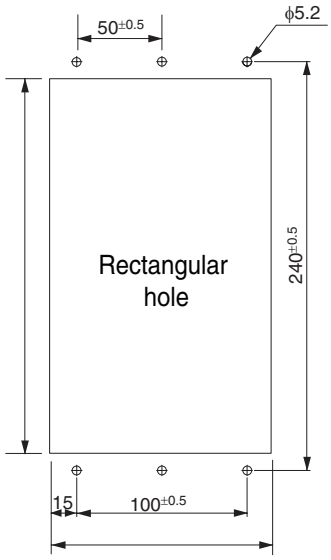

Servomotor Dimensions

3,000-r/min Servomotors (100 V and 200 V)

50 W/100 W (without Brake)

R88M-K05030H (-S2)/-K10030L (-S2) **INC**

R88M-K05030T (-S2)/-K10030S (-S2) **ABS**

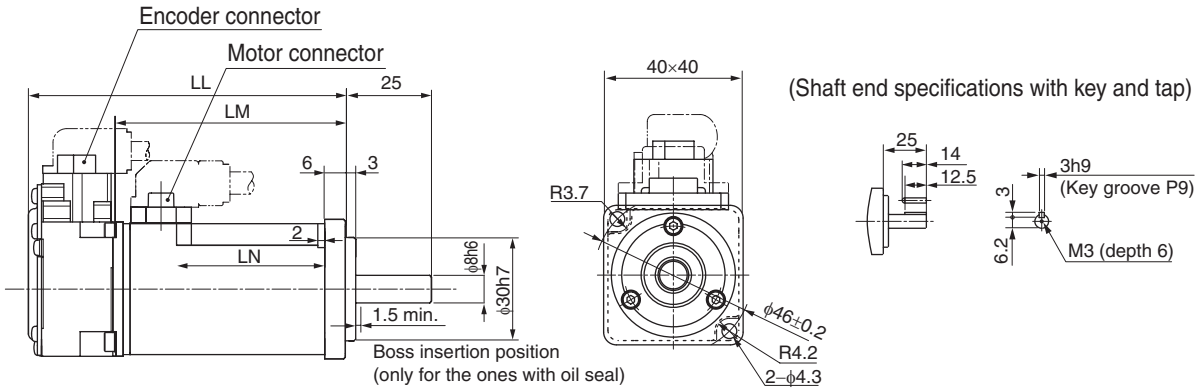

Model	Dimensions (mm)		
	LL	LM	LN
R88M-K05030□	72	48	23
R88M-K10030□	92	68	43

Note. The standard models have a straight shaft. Models with a key and tap are indicated with S2 at the end of the model number.

50 W/100 W (with Brake)

R88M-K05030H-B (S2)/-K10030L-B (S2) **INC**

R88M-K05030T-B (S2)/-K10030S-B (S2) **ABS**

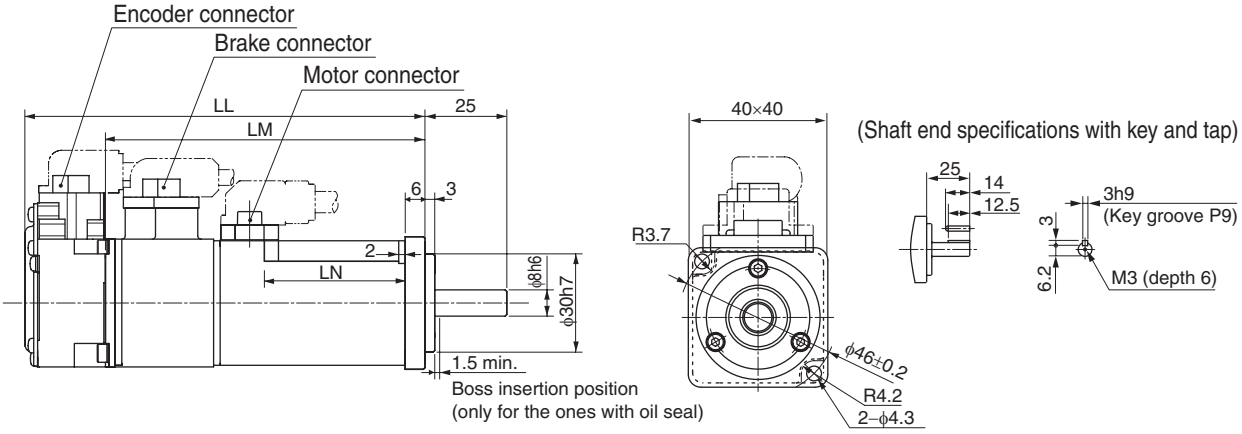

Model	Dimensions (mm)		
	LL	LM	LN
R88M-K05030□-Bx	102	78	23
R88M-K10030□-Bx	122	98	43

Note. The standard models have a straight shaft. Models with a key and tap are indicated with S2 at the end of the model number.

200 W/400 W (without Brake)

R88M-K20030□ (-S2)/-K40030□ (-S2) **INC**

R88M-K20030□ (-S2)/-K40030□ (-S2) **ABS**

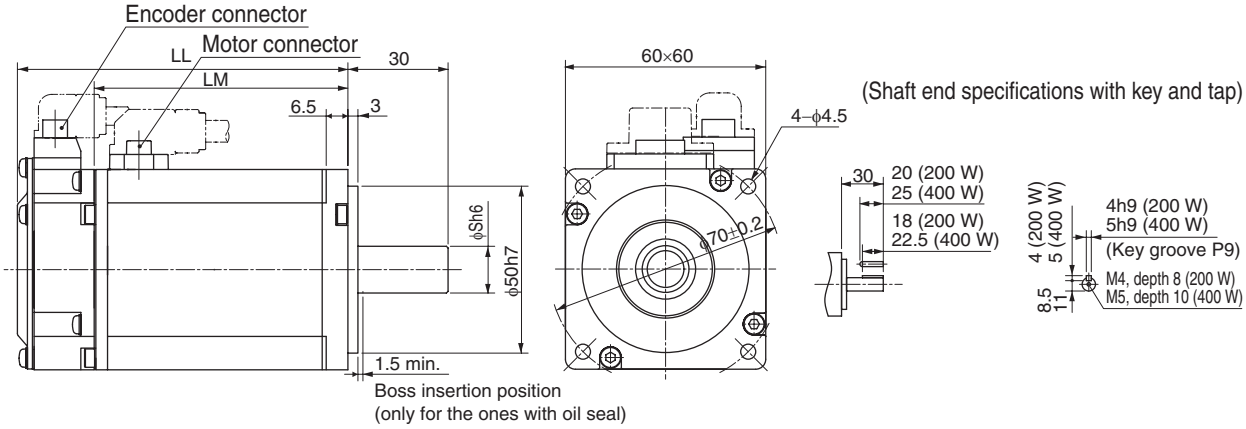

Model	Dimensions (mm)		
	LL	LM	S
R88M-K20030□	79.5	56.5	11
R88M-K40030□	99	76	14

Note. The standard models have a straight shaft. Models with a key and tap are indicated with S2 at the end of the model number.

200 W/400 W (with Brake)

R88M-K20030□-B (S2)/-K40030□-B (S2) **INC**

R88M-K20030□-B (S2)/-K40030□-B (S2) **ABS**

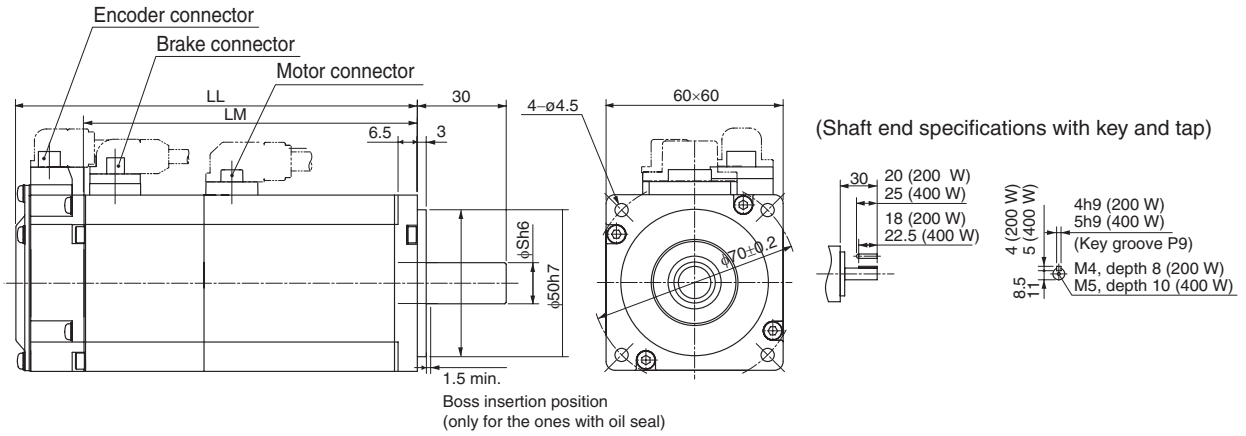

Model	Dimensions (mm)		
	LL	LM	S
R88M-K20030□-B□	116	93	11
R88M-K40030□-B□	135.5	112.5	14

Note. The standard models have a straight shaft. Models with a key and tap are indicated with S2 at the end of the model number.

750 W (without Brake)

R88M-K75030H (-S2) **INC**

R88M-K75030T (-S2) **ABS**

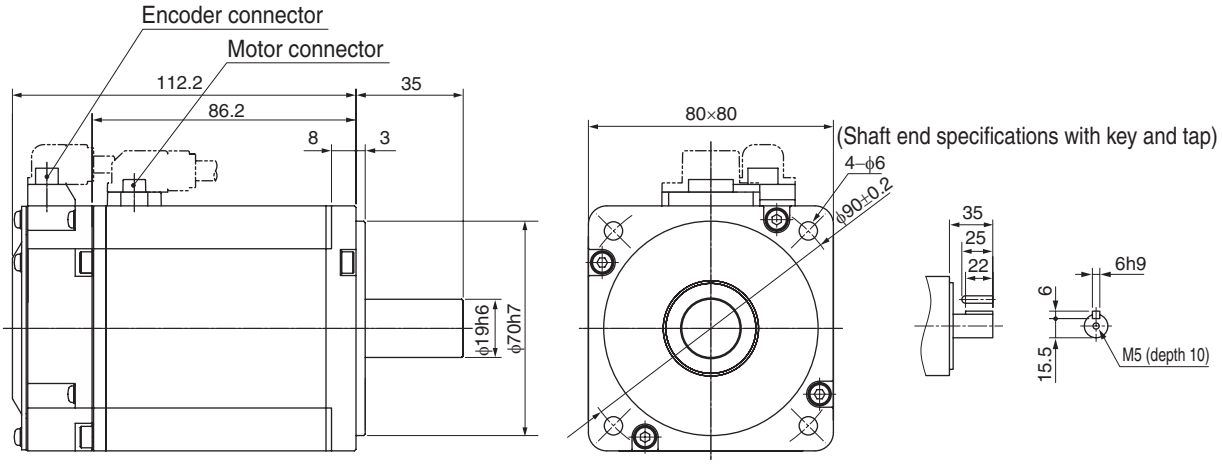

Note. The standard models have a straight shaft. Models with a key and tap are indicated with S2 at the end of the model number.

750 W (with Brake)

R88M-K75030H-B (S2) **INC**

R88M-K75030T-B (S2) **ABS**

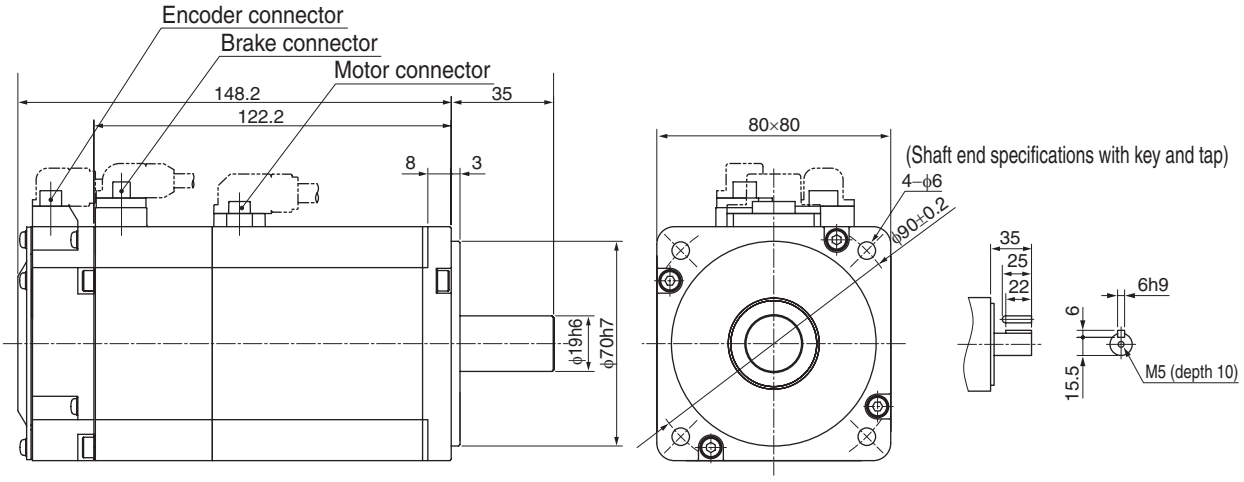

Note. The standard models have a straight shaft. Models with a key and tap are indicated with S2 at the end of the model number.

1 kW/1.5 kW/2 kW (without Brake)

R88M-K1K030H (-S2)/-K1K530H (-S2)/-K2K030H (-S2) **INC**

R88M-K1K030T (-S2)/-K1K530T (-S2)/-K2K030T (-S2) **ABS**

1 kW/1.5 kW/2 kW (with Brake)

R88M-K1K030H-B (S2)/-K1K530H-B (S2)/-K2K030H-B (S2) **INC**

R88M-K1K030T-B (S2)/-K1K530T-B (S2)/-K2K030T-B (S2) **ABS**

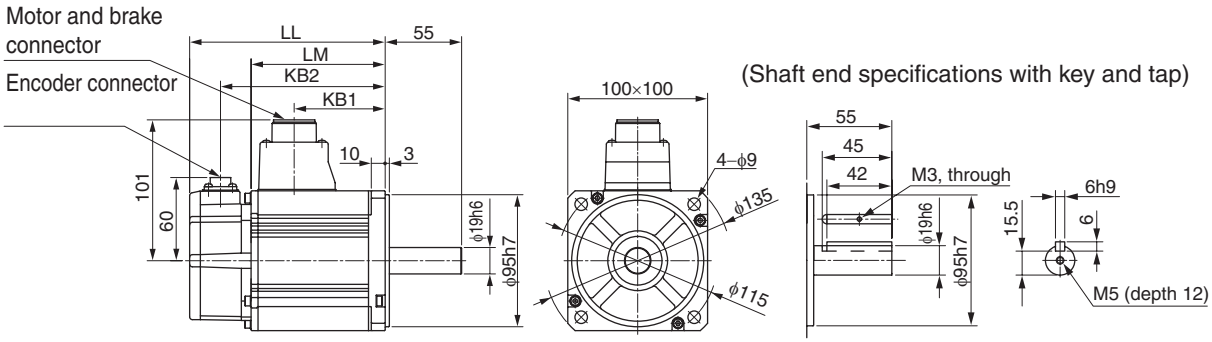

Model	Dimensions (mm)			
	LL	LM	KB1	KB2
R88M-K1K030□	141	97	66	119
R88M-K1K530□	159.5	115.5	84.5	137.5
R88M-K2K030□	178.5	134.5	103.5	156.5
R88M-K1K030□-B□	168	124	66	146
R88M-K1K530□-B□	186.5	142.5	84.5	164.5
R88M-K2K030□-B□	205.5	161.5	103.5	183.5

Note. The standard models have a straight shaft. Models with a key and tap are indicated with S2 at the end of the model number.

3 kW (without Brake)

R88M-K3K030H (-S2) **INC**

R88M-K3K030T (-S2) **ABS**

3 kW (with Brake)

R88M-K3K030H-B (S2) **INC**

R88M-K3K030T-B (S2) **ABS**

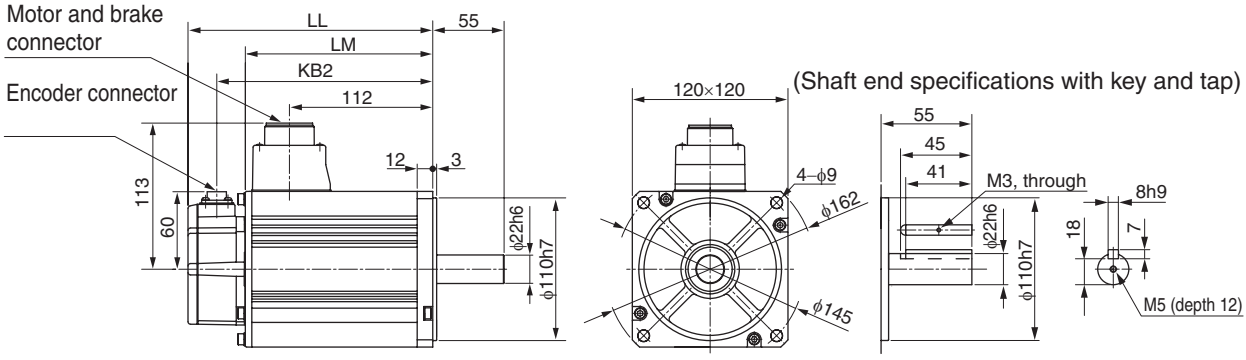

Model	Dimensions (mm)		
	LL	LM	KB2
R88M-K3K030□	190	146	168
R88M-K3K030□-B□	215	171	193

Note. The standard models have a straight shaft. Models with a key and tap are indicated with S2 at the end of the model number.

4 kW/5 kW (without Brake)

R88M-K4K030H (-S2)/-K5K030H (-S2) **INC**

R88M-K4K030T (-S2)/-K5K030T (-S2) **ABS**

4 kW/5 kW (with Brake)

R88M-K4K030H-B (S2)/-K5K030H-B (S2) **INC**

R88M-K4K030T-B (S2)/-K5K030T-B (S2) **ABS**

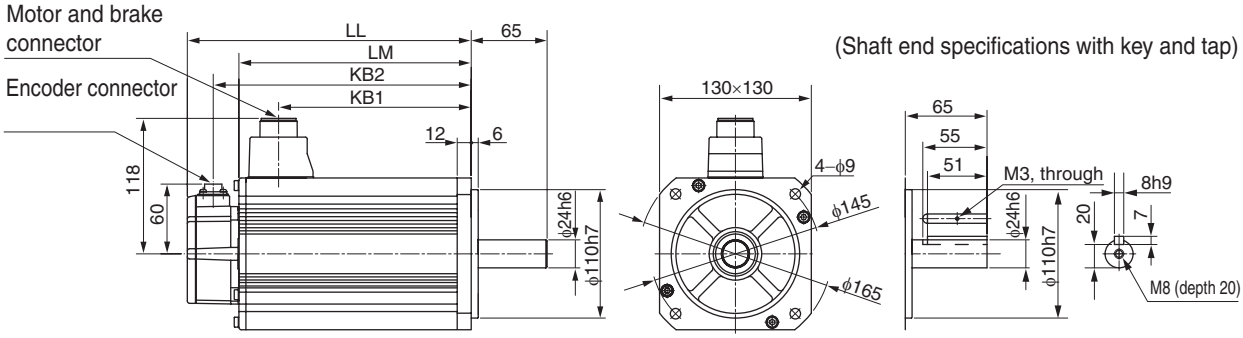

Model	Dimensions (mm)			
	LL	LM	KB1	KB2
R88M-K4K030□	208	164	127	186
R88M-K5K030□	243	199	162	221
R88M-K4K030□-B□	233	189	127	211
R88M-K5K030□-B□	268	224	162	246

Note. The standard models have a straight shaft. Models with a key and tap are indicated with S2 at the end of the model number.

3,000-r/min Servomotors (400 V)

750 W/1 kW/1.5 kW/2 kW (without Brake)

R88M-K75030F (-S2)/-K1K030F (-S2)/-K1K530F (-S2)/-K2K030F (-S2) **INC**

R88M-K75030C (-S2)/-K1K030C (-S2)/-K1K530C (-S2)/-K2K030C (-S2) **ABS**

750 W/1 kW/1.5 kW/2 kW (with Brake)

R88M-K75030F-B (S2)/-K1K030F-B (S2)/-K1K530F-B (S2)/-K2K030F-B (S2) **INC**

R88M-K75030C-B (S2)/-K1K030C-B (S2)/-K1K530C-B (S2)/-K2K030C-B (S2) **ABS**

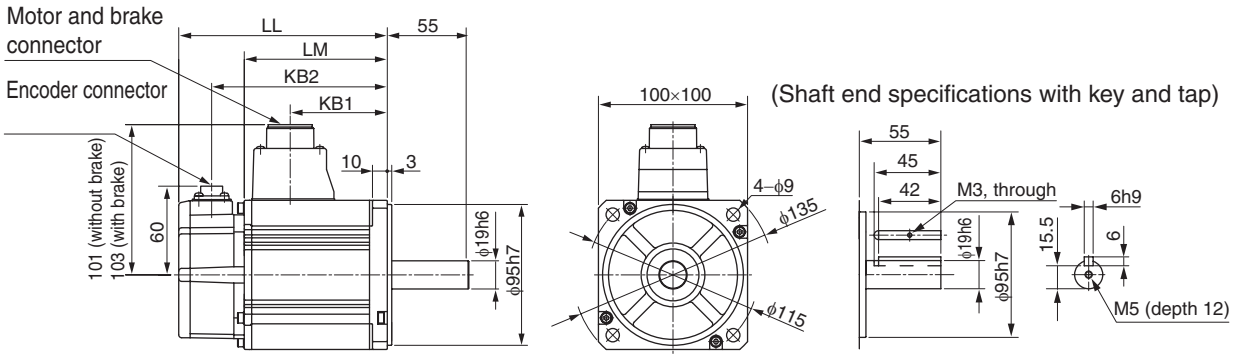

Model	Dimensions (mm)			
	LL	LM	KB1	KB2
R88M-K75030□	131.5	87.5	56.5	109.5
R88M-K1K030□	141	97	66	119
R88M-K1K530□	159.5	115.5	84.5	137.5
R88M-K2K030□	178.5	134.5	103.5	156.5
R88M-K75030□-B□	158.5	114.5	53.5	136.5
R88M-K1K030□-B□	168	124	63	146
R88M-K1K530□-B□	186.5	142.5	81.5	164.5
R88M-K2K030□-B□	205.5	161.5	100.5	183.5

Note. The standard models have a straight shaft. Models with a key and tap are indicated with S2 at the end of the model number.

3 kW (without Brake)

R88M-K3K030F (-S2) **INC**

R88M-K3K030C (-S2) **ABS**

3 kW (with Brake)

R88M-K3K030F-B (S2) **INC**

R88M-K3K030C-B (S2) **ABS**

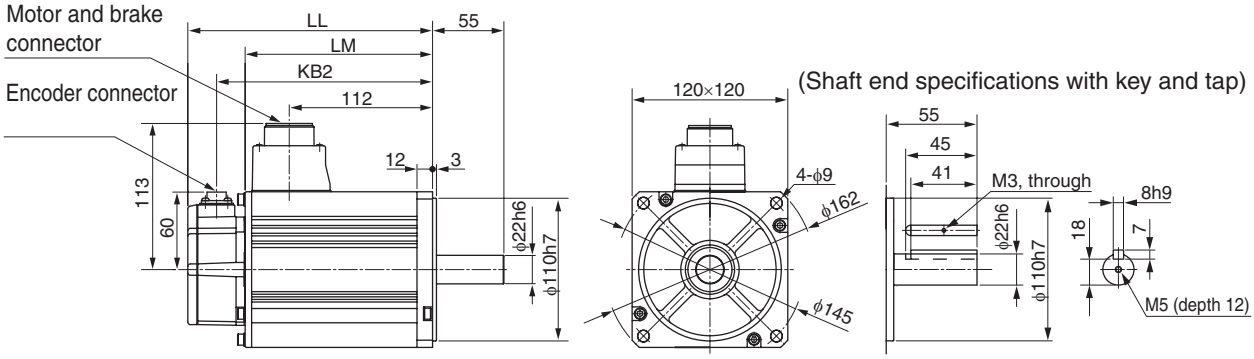

Model	Dimensions (mm)		
	LL	LM	KB2
R88M-K3K030□	190	146	168
R88M-K3K030□-B□	215	171	193

Note. The standard models have a straight shaft. Models with a key and tap are indicated with S2 at the end of the model number.

4 kW/5 kW (without Brake)

R88M-K4K030F (-S2)/-K5K030F (-S2) **INC**

R88M-K4K030C (-S2)/-K5K030C (-S2) **ABS**

4 kW/5 kW (with Brake)

R88M-K4K030F-B (S2)/-K5K030F-B (S2) **INC**

R88M-K4K030C-B (S2)/-K5K030C-B (S2) **ABS**

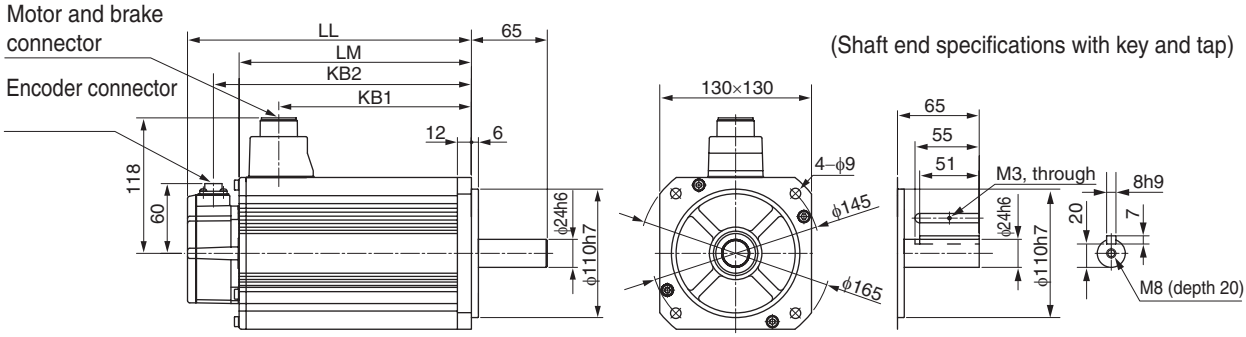

Model	Dimensions (mm)			
	LL	LM	KB1	KB2
R88M-K4K030□	208	164	127	186
R88M-K5K030□	243	199	162	221
R88M-K4K030□-B□	233	189	127	211
R88M-K5K030□-B□	268	224	162	246

Note. The standard models have a straight shaft. Models with a key and tap are indicated with S2 at the end of the model number.

2,000-r/min Servomotors (200 V)

1 kW/1.5 kW/2 kW/3 kW (without Brake)

R88M-K1K020H (-S2)/-K1K520H (-S2)/-K2K020H (-S2)/-K3K020H (-S2) **INC**

R88M-K1K020T (-S2)/-K1K520T (-S2)/-K2K020T (-S2)/-K3K020T (-S2) **ABS**

1 kW/1.5 kW/2 kW/3 kW (with Brake)

R88M-K1K020H-B (S2)/-K1K520H-B (S2)/-K2K020H-B (S2)/-K3K020H-B (S2) **INC**

R88M-K1K020T-B (S2)-K1K520T-B (S2)/-K2K020T-B (S2)/-K3K020T-B (S2) **ABS**

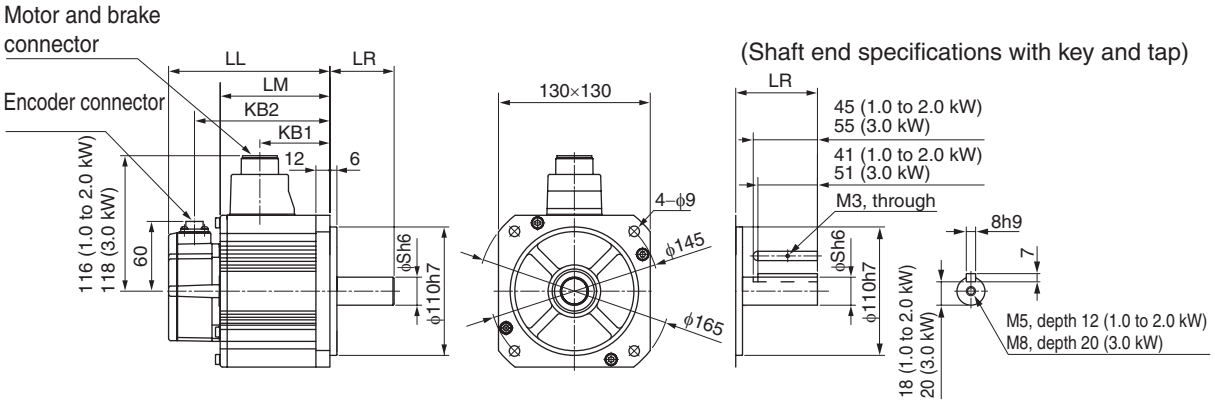

Model	Dimensions (mm)					
	LL	LR	LM	S	KB1	KB2
R88M-K1K020□	138	55	94	22	60	116
R88M-K1K520□	155.5	55	111.5	22	77.5	133.5
R88M-K2K020□	173	55	129	22	95	151
R88M-K3K020□	208	65	164	24	127	186
R88M-K1K020□-B□	163	55	119	22	60	141
R88M-K1K520□-B□	180.5	55	136.5	22	77.5	158.5
R88M-K2K020□-B□	198	55	154	22	95	176
R88M-K3K020□-B□	233	65	189	24	127	211

Note. The standard models have a straight shaft. Models with a key and tap are indicated with S2 at the end of the model number.

4 kW/5 kW (without Brake)

R88M-K4K020H (-S2)/-K5K020H (-S2) **INC**

R88M-K4K020T (-S2)/-K5K020T (-S2) **ABS**

4 kW/5 kW (with Brake)

R88M-K4K020H-B (S2)/-K5K020H-B (S2) **INC**

R88M-K4K020T-B (S2)/-K5K020T-B (S2) **ABS**

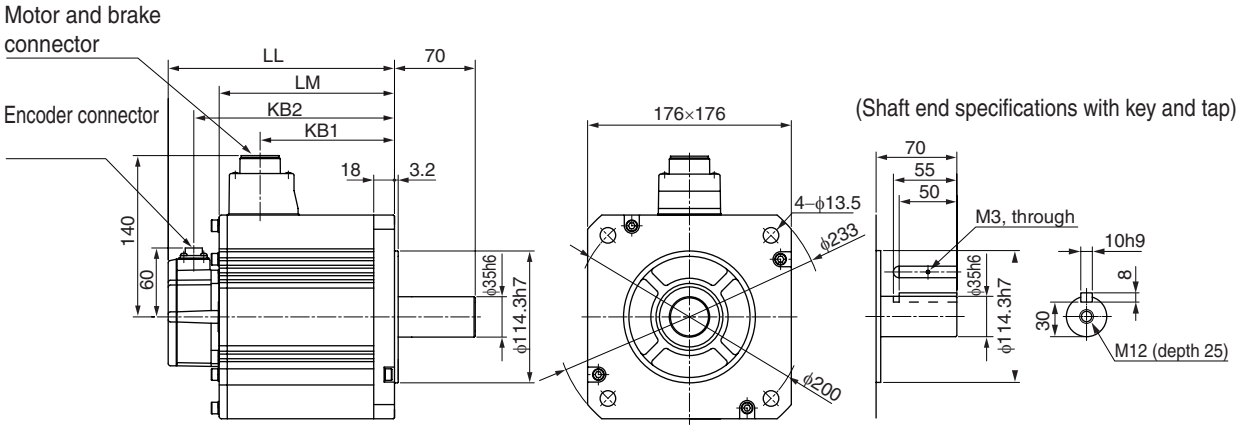

Model	Dimensions (mm)			
	LL	LM	KB1	KB2
R88M-K4K020□	177	133	96	155
R88M-K5K020□	196	152	115	174
R88M-K4K020□-B□	202	158	96	180
R88M-K5K020□-B□	221	177	115	199

Note. The standard models have a straight shaft. Models with a key and tap are indicated with S2 at the end of the model number.

2,000-r/min Servomotors (400 V)

400 W/600 W (without Brake)

R88M-K40020F (-S2)/-K60020F (-S2) **INC**

R88M-K40020C (-S2)/-K60020C (-S2) **ABS**

400 W/600 W (with Brake)

R88M-K40020F-B (S2)/-K60020F-B (S2) **INC**

R88M-K40020C-B (S2)/-K60020C-B (S2) **ABS**

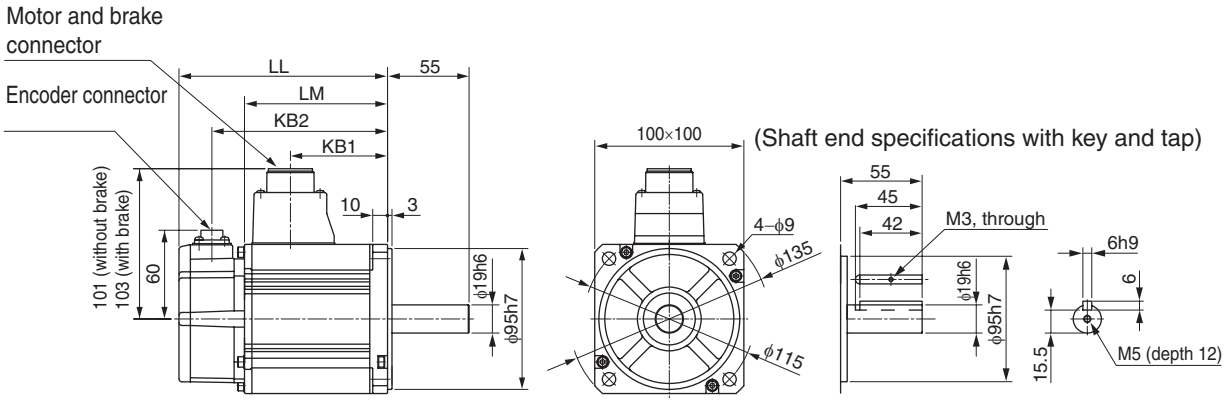

Model	Dimensions (mm)			
	LL	LM	KB1	KB2
R88M-K40020□	131.5	87.5	56.5	109.5
R88M-K60020□	141	97	66	119
R88M-K40020□-B□	158.5	114.5	53.5	136.5
R88M-K60020□-B□	168	124	63	146

Note. The standard models have a straight shaft. Models with a key and tap are indicated with S2 at the end of the model number.

1 kW/1.5 kW/2 kW/3 kW (without Brake)

R88M-K1K020F (-S2)/-K1K520F (-S2)/-K2K020F (-S2)/-K3K020F (-S2) **INC**

R88M-K1K020C (-S2)/-K1K520C (-S2)/-K2K020C (-S2)/-K3K020C (-S2) **ABS**

1 kW/1.5 kW/2 kW/3 kW (with Brake)

R88M-K1K020F-B (S2)/-K1K520F-B (S2)/-K2K020F-B (S2)/-K3K020F-B (S2) **INC**

R88M-K1K020C-B (S2)/-K1K520C-B (S2)/-K2K020C-B (S2)/-K3K020C-B (S2) **ABS**

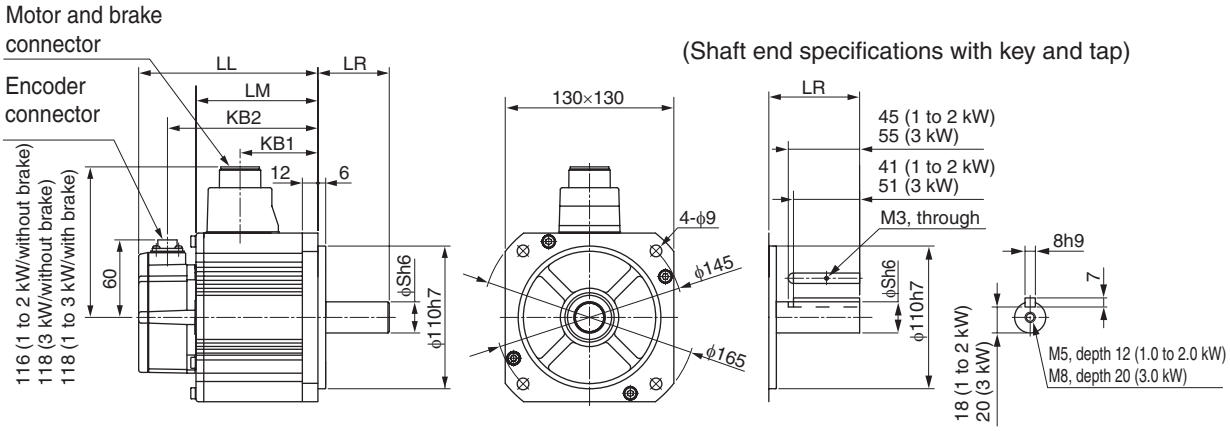

Model	Dimensions (mm)					
	LL	LR	LM	S	KB1	KB2
R88M-K1K020□	138	55	94	22	60	116
R88M-K1K520□	155.5	55	111.5	22	77.5	133.5
R88M-K2K020□	173	55	129	22	95	151
R88M-K3K020□	208	65	164	24	127	186
R88M-K1K020□-B□	163	55	119	22	57	141
R88M-K1K520□-B□	180.5	55	136.5	22	74.5	158.5
R88M-K2K020□-B□	198	55	154	22	92	176
R88M-K3K020□-B□	233	65	189	24	127	211

Note. The standard models have a straight shaft. Models with a key and tap are indicated with S2 at the end of the model number.

4 kW/5 kW (without Brake)

R88M-K4K020F (-S2)/-K5K020F (-S2) **INC**

R88M-K4K020C (-S2)/-K5K020C (-S2) **ABS**

4 kW/5 kW (with Brake)

R88M-K4K020F-B (S2)/-K5K020F-B (S2) **INC**

R88M-K4K020C-B (S2)/-K5K020C-B (S2) **ABS**

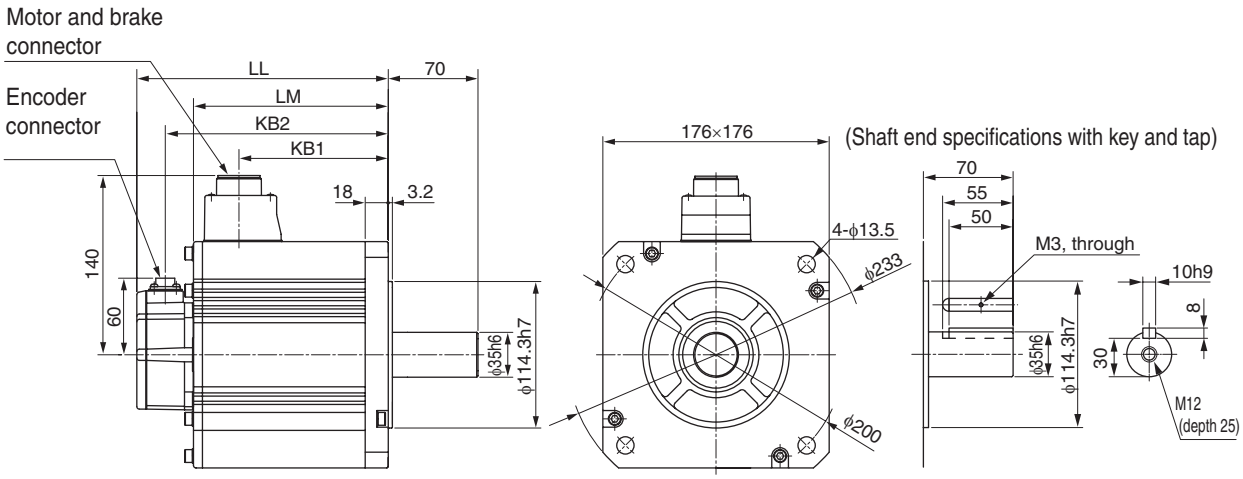

Model	Dimensions (mm)			
	LL	LM	KB1	KB2
R88M-K4K020□	177	133	96	155
R88M-K5K020□	196	152	115	174
R88M-K4K020□-B□	202	158	96	180
R88M-K5K020□-B□	221	177	115	199

Note. The standard models have a straight shaft. Models with a key and tap are indicated with S2 at the end of the model number.

1,000-r/min Servomotors (200 V)

900 W (without Brake)

R88M-K90010H (-S2) **INC**

R88M-K90010T (-S2) **ABS**

900 W (with Brake)

R88M-K90010H-B (S2) **INC**

R88M-K90010T-B (S2) **ABS**

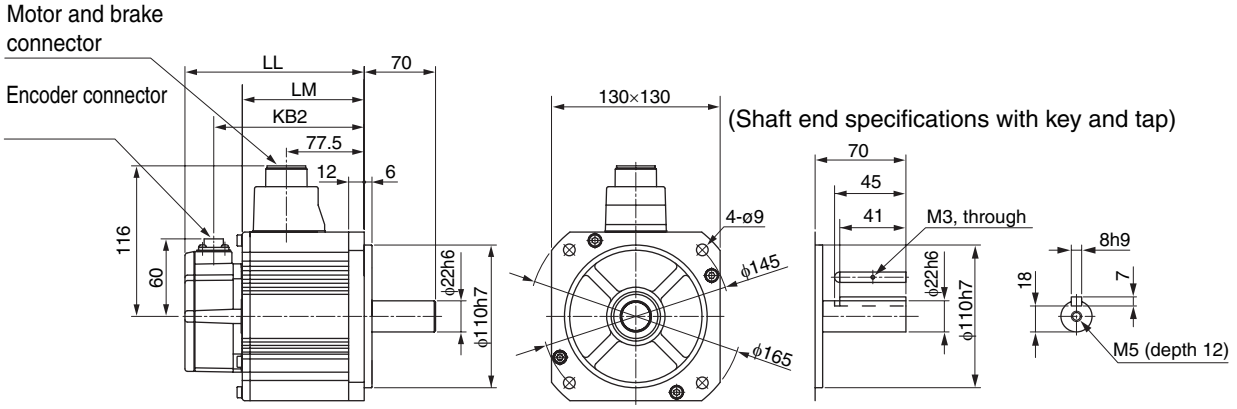

Model	Dimensions (mm)		
	LL	LM	KB2
R88M-K90010□	155.5	111.5	133.5
R88M-K90010□-B□	180.5	136.5	158.5

Note. The standard models have a straight shaft. Models with a key and tap are indicated with S2 at the end of the model number.

2 kW/3 kW (without Brake)

R88M-K2K010H (-S2)/-K3K010H (-S2) **INC**

R88M-K2K010T (-S2)/-K3K010T (-S2) **ABS**

2 kW/3 kW (with Brake)

R88M-K2K010H-B (S2)/-K3K010H-B (S2) **INC**

R88M/-K2K010T-B (S2)/-K3K010T-B (S2) **ABS**

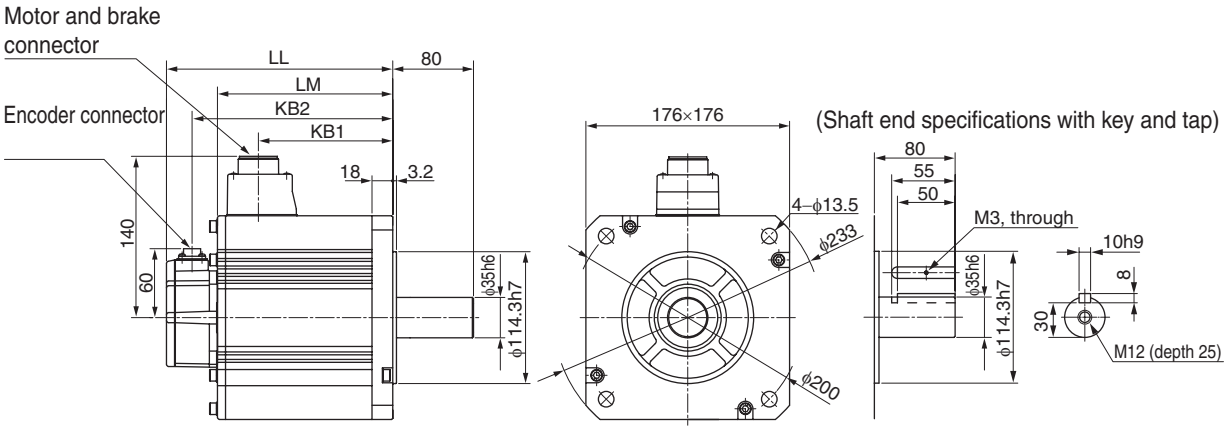

Model	Dimensions (mm)			
	LL	LM	KB1	KB2
R88M-K2K010□	163.5	119.5	82.5	141.5
R88M-K3K010□	209.5	165.5	128.5	187.5
R88M-K2K010□-B□	188.5	144.5	82.5	166.5
R88M-K3K010□-B□	234.5	190.5	128.5	212.5

Note. The standard models have a straight shaft. Models with a key and tap are indicated with S2 at the end of the model number.

1,000-r/min Servomotors (400 V)

900 W (without Brake)

R88M-K90010F (-S2) **INC**

R88M-K90010C (-S2) **ABS**

900 W (with Brake)

R88M-K90010F-B (S2) **INC**

R88M-K90010C-B (S2) **ABS**

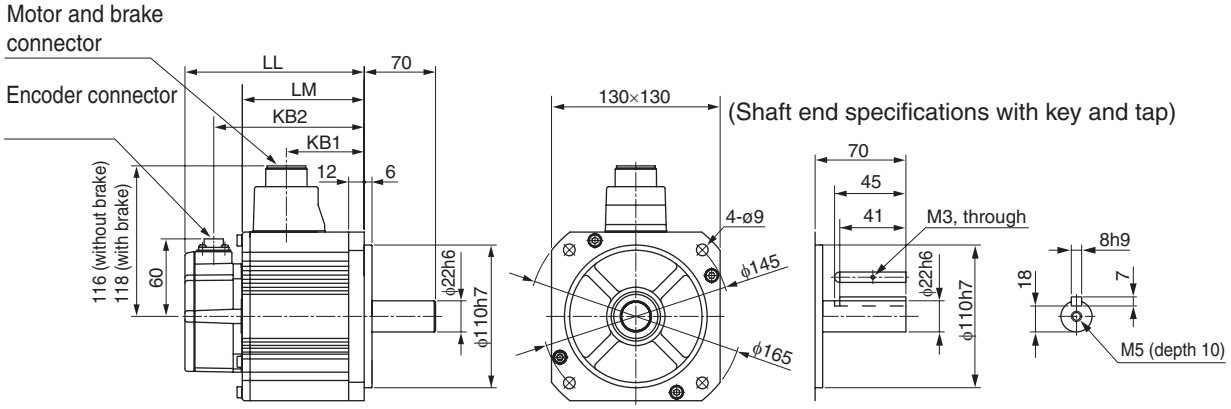

Model	Dimensions (mm)			
	LL	LM	KB1	KB2
R88M-K90010□	155.5	111.5	77.5	133.5
R88M-K90010□-B□	180.5	136.5	74.5	158.5

Note. The standard models have a straight shaft. Models with a key and tap are indicated with S2 at the end of the model number.

2 kW/3 kW (without Brake)

R88M-K2K010F (-S2)/-K3K010F (-S2) **INC**

R88M-K2K010C (-S2)/-K3K010C (-S2) **ABS**

2 kW/3 kW (with Brake)

R88M-K2K010F-B (S2)/-K3K010F-B (S2) **INC**

R88M-K2K010C-B (S2)/-K3K010C-B (S2) **ABS**

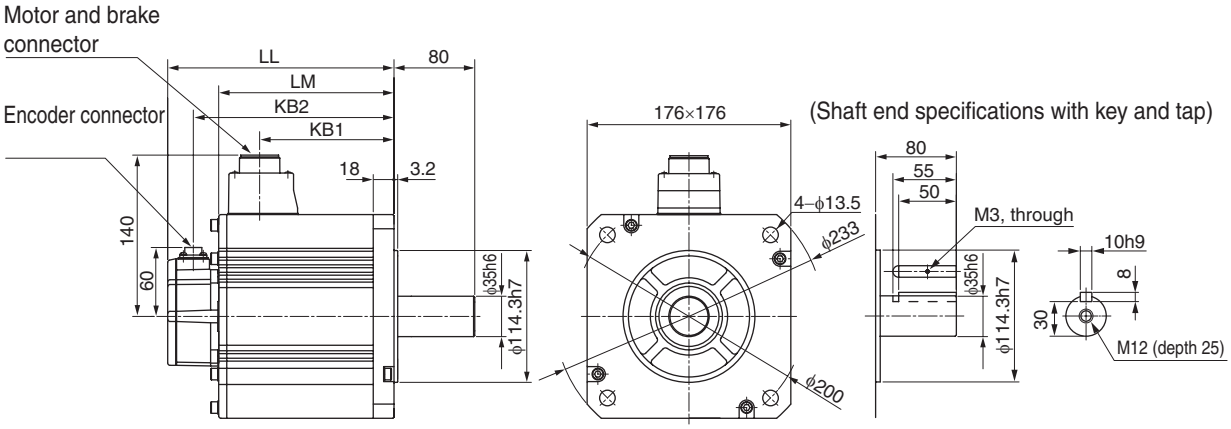

Model	Dimensions (mm)			
	LL	LM	KB1	KB2
R88M-K2K010□	163.5	119.5	82.5	141.5
R88M-K3K010□	209.5	165.5	128.5	187.5
R88M-K2K010□-B□	188.5	144.5	82.5	166.5
R88M-K3K010□-B□	234.5	190.5	128.5	212.5

Note. The standard models have a straight shaft. Models with a key and tap are indicated with S2 at the end of the model number.

External Regeneration Resistor Dimensions

External Regeneration Resistor

R88A-RR08050S/-RR080100S

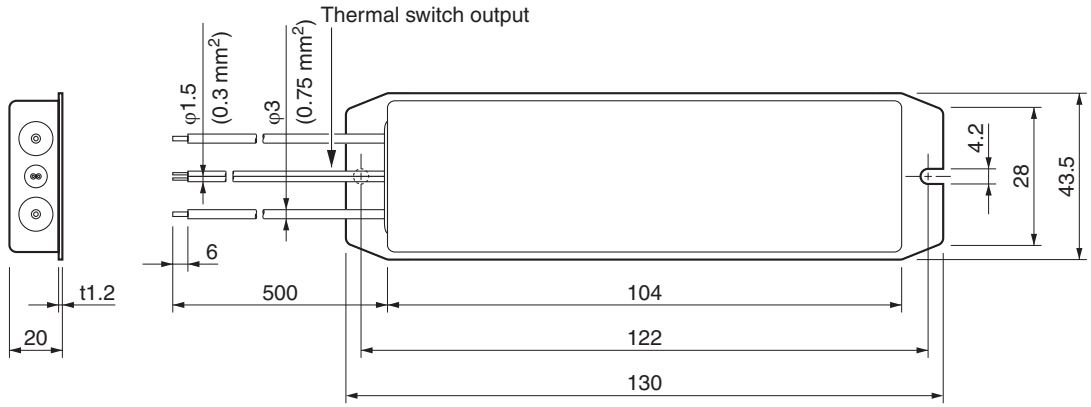

R88A-RR22047S/-RR22047S1

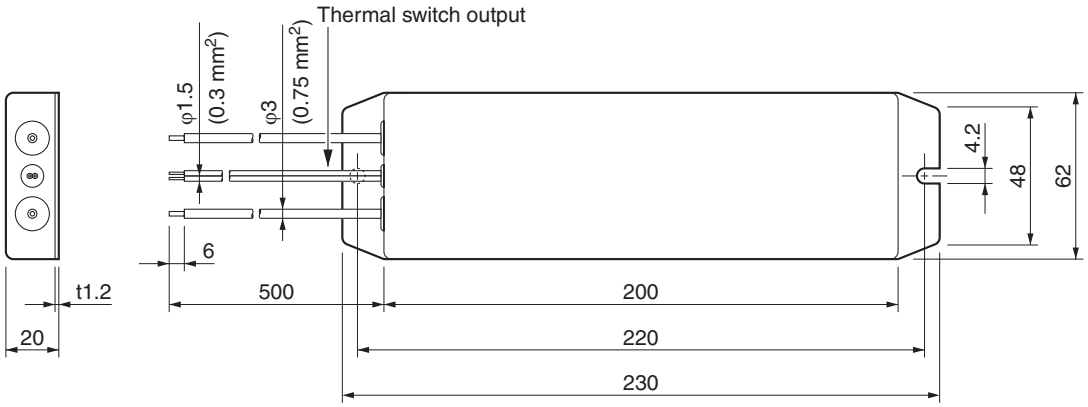

R88A-RR50020S

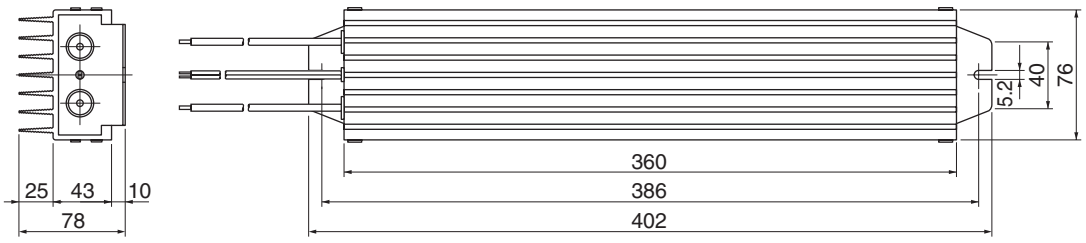

2-5 EMC Filter Dimensions

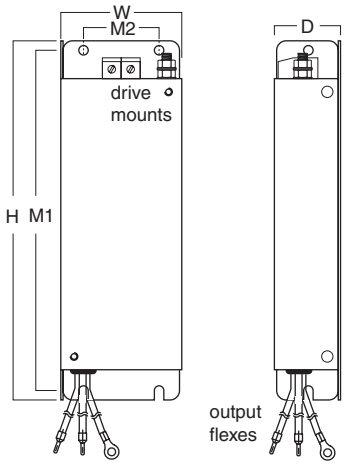

Filter model	External dimensions			Mount dimensions	
	H	W	D	M1	M2
R88A-FIK102-RE	190	42	44	180	20
R88A-FIK104-RE	190	57	30	180	30
R88A-FIK107-RE	190	64	35	180	40
R88A-FIK114-RE	190	86	35	180	60
R88A-FIK304-RE	190	86	40	180	60
R88A-FIK306-RE	245	94	40	235	60
R88A-FIK312-RE	290	130	45	280	100

3

Specifications

This chapter provides the general specifications, characteristics, connector specifications, and I/O circuits of the Servo Drives as well as the general specifications, characteristics, encoder specifications of the Servomotors and other peripheral devices.

3-1 Servo Drive Specifications 3-1

General Specifications 3-1
Characteristics 3-2
Main Circuit and Motor Connections 3-8
Control I/O Connector Specifications (CN1) 3-13
Control Input Circuits 3-23
Control Input Details 3-27
Control Output Circuits 3-39
Control Output Details 3-40
Encoder Connector Specifications (CN2) 3-45
External Encoder Connector Specifications (CN4) 3-45
Monitor Connector Specifications (CN5) 3-49
USB Connector Specifications (CN7) 3-50
Safety Connector Specifications (CN8) 3-51

3-2 Overload Characteristics (Electronic Thermal Function) ... 3-53

Overload Characteristics Graphs 3-53

3-3 Servomotor Specifications 3-54

General Specifications 3-54
Characteristics 3-55
Encoder Specifications 3-80

3-4 Cable and Connector Specifications 3-81

Encoder Cable Specifications 3-81
Motor Power Cable Specifications 3-83
Connector Specifications 3-90
Analog Monitor Cable Specifications 3-93
Control Cable Specifications 3-95

3-5 Servo Relay Units and Cable Specifications.....3-110

Servo Relay Units Specifications 3-110
Position Control Unit-Servo Relay Unit Cable Specifications 3-119

3-6 External Regeneration Resistor Specifications.....3-129

External Regeneration Resistor Specifications 3-129

3-7 EMC Filter Specifications.....3-131

3-1 Servo Drive Specifications

Select a Servo Drive that matches the Servomotor to be used. Refer to "Servo Drive and Servomotor Combination Tables"(P.2-10).
The same OMNUC G5-Series AC Servo Drive can be used for either a pulse train input or analog input. You can change the control mode according to the controller. (The default setting is for position control with pulse train commands.)

General Specifications

Item			Specifications
Ambient operating temperature and operating humidity			0 to +55°C, 90% max. (with no condensation)
Storage ambient temperature and humidity			-20 to +65°C, 90% max. (with no condensation)
Operating and storage atmosphere			No corrosive gases
Vibration resistance			10 to 60 Hz and at an acceleration of 5.88 m/s^2 or less (Not to be run continuously at the resonance point)
Impact resistance			Acceleration of 19.6 m/s^2 max. 2 times each in X, Y, and Z directions
Insulation resistance			Between power supply terminals/power terminals and FG terminal: 0.5 MΩ min. (at 500 VDC)
Dielectric strength			Between power supply terminals/power line terminals and FG terminal: 1,500 VAC for 1 min at 50/60 Hz
Protective structure			Built into panel
International standard	EC Directives	EMC Directive	EN 55011, EN 61000-6-2, IEC 61800-3
		Low Voltage Directive	EN 61800-5-1
	UL standards		UL 508C
	CSA standards		CSA22.2 No. 14
	Functional safety		EN954-1, ISO 13849-1, EN 61508, EN 62061 and IEC 61800-5-2, and IEC 61326-3-1

Note 1. The above items reflect individual evaluation testing. The results may differ under compound conditions.
Note 2. Never perform dielectric strength or other megameter tests on the Servo Drive. Failure to follow this guideline may result in damaging the internal elements.
Note 3. Depending on the operating conditions, some Servo Drive parts will require maintenance. For details, refer to "11-5 Periodic Maintenance" (P.11-21).

Characteristics

100-VAC Input Models

Item			R88D-KTA5L	R88D-KT01L	R88D-KT02L	R88D-KT04L
Continuous output current (rms)			1.2 A	1.7 A	2.5 A	4.6 A
Input power supply	Main circuit	Power supply capacity	0.4 KVA	0.4 KVA	0.5 KVA	0.9 KVA
		Power supply voltage	Single-phase 100 to 120 VAC (85 to 132 V) 50/60 Hz			
		Rated current	1.4 A	2.6 A	4.3 A	7.6 A
	Control circuit	Power supply voltage	Single-phase 100 to 120 VAC (85 to 132 V) 50/60 Hz			
Control method			All-digital servo			
Inverter method			IGBT-driven PWM			
PWM frequency			12.0 kHz		6.0 kHz	
Weight			Approx. 0.8 kg	Approx. 0.8 kg	Approx. 1.0 kg	Approx. 1.6 kg
Maximum applicable motor capacity			50 W	100 W	200 W	400 W
Applicable Servomotor	3,000 r/min	INC	K05030H	K10030L	K20030L	K40030L
		ABS	K05030T	K10030S	K20030S	K40030S
	2,000-r/min	ABS	–	–	–	–
	1,000-r/min	ABS	–	–	–	–

200-VAC Input Models

Item			R88D-KT01H	R88D-KT02H	R88D-KT04H	R88D-KT08H	R88D-KT10H	R88D-KT15H
Continuous output current (rms)			1.2 A	1.6 A	2.6 A	4.1 A	5.9 A	9.4 A
Input power supply	Main circuit	Power supply capacity	0.5 KVA	0.5 KVA	0.9 KVA	1.3 KVA	1.8 KVA	2.3KVA
		Power supply voltage	Single-phase or 3-phase 200 to 240 VAC (170 to 264 V) 50/60 Hz					
		Rated current	1.3 A	2.4/1.3 *1 A	4.1/2.4 *1 A	6.6/3.6 *1 A	9.1/5.9 *1 A	14.2/8.1 *1 A
	Control circuit	Power supply voltage	Single-phase 200 to 240 VAC (170 to 264 V) 50/60 Hz					
PWM frequency			12.0 kHz		6.0 kHz			
Weight			Approx. 0.8 kg	Approx. 0.8 kg	Approx. 1.0 kg	Approx. 1.6 kg	Approx. 1.8 kg	Approx. 1.8 kg
Maximum applicable motor capacity			100 W	200 W	400 W	750 W	1 kW	1.5 kW
Applicable Servomotor	3,000-r/min	INC	K05030H K10030H	K20030H	K40030H	K75030H	–	K1K030H K1K530H
		ABS	K05030T K10030T	K20030T	K40030T	K75030T	–	K1K030T K1K530T
	2,000-r/min	INC	–	–	–	–	K1K020H	K1K520H
		ABS	–	–	–	–	K1K020T	K1K520T
	1,000-r/min	INC	–	–	–	–	–	K90010H
		ABS	–	–	–	–	–	K90010T
Control method			All-digital servo					
Inverter method			IGBT-driven PWM					

*1. The first value is for single-phase input power and the second value is for 3-phase input power.

Item			R88D-KT20H	R88D-KT30H	R88D-KT50H
Continuous output current (rms)			13.4 A	18.7 A	33.0 A
Input power supply	Main circuit	Power supply capacity	3.3 KVA	4.5 KVA	7.5 KVA
		Power supply voltage	3-phase 200 to 230 VAC (170 to 253 V) 50/60 Hz		
		Rated current	11.8 A	15.1 A	21.6 A
	Control circuit	Power supply voltage	Single-phase 200 to 230 VAC (170 to 253 V) 50/60 Hz		
PWM frequency			6.0 kHz		
Weight			Approx. 2.7 kg	Approx. 4.8 kg	Approx. 4.8 kg
Maximum applicable motor capacity			2 kW	3 kW	5 kW
Applicable Servomotor	3,000-r/min	INC	K2K030H	K3K030H	K4K030H K5K030H
		ABS	K2K030T	K3K030T	K4K030T K5K030T
	2,000-r/min	INC	K2K020H	K3K020H	K4K020H K5K020H
		ABS	K2K020T	K3K020T	K4K020T K5K020T
	1,000-r/min	INC	–	K2K010H	K3K010H
		ABS	–	K2K010T	K3K010T K4K510T
Control method			All-digital servo		
Inverter method			IGBT-driven PWM		

400-VAC Input Models

Item			R88D-KT06F	R88D-KT10F	R88D-KT15F	R88D-KT20F	R88D-KT30F	R88D-KT50F
Continuous output current (rms)			2.9 A	2.9 A	4.7 A	6.7 A	9.4 A	16.5 A
Input power supply	Main circuit	Power supply voltage	3-phase 380 to 480 VAC (323 to 528 V) 50/60 Hz					
		Rated current	2.8 A	2.8 A	4.7 A	5.9 A	7.6 A	12.1 A
	Control circuit	Power supply voltage	24 VDC (20.4 to 27.6 V)					
PWM frequency			6.0 kHz					
Weight			Approx. 1.9 kg	Approx. 1.9 kg	Approx. 1.9 kg	Approx. 2.7 kg	Approx. 4.7 kg	Approx. 4.7 kg
Maximum applicable motor capacity			600 W	1 kW	1.5 kW	2 kW	3 kW	5 kW
Applicable Servomotor	3,000-r/min	INC	–	K75030F	K1K030F K1K530F	K2K030F	K3K030F	K4K030F K5K030F
		ABS	–	K75030C	K1K030C K1K530C	K2K030C	K3K030C	K4K030C K5K030C
	2,000-r/min	INC	K40020F K60020F	K1K020F	K1K520F	K2K020F	K3K020F	K4K020F K5K020F
		ABS	K40020C K60020C	K1K020C	K1K520C	K2K020C	K3K020C	K4K020C K5K020C
	1,000-r/min	INC	–	–	K90010F	–	K2K010F	K3K010F
		ABS	–	–	K90010C	–	K2K010C	K3K010C
Control method			All-digital servo					
Inverter method			IGBT-driven PWM					

Protective Functions

Error detected	Description
Control power supply undervoltage	The DC voltage of the main circuit fell below the specified value.
Overvoltage	The DC voltage in the main circuit is abnormally high.
Main power supply undervoltage	The DC voltage of the main circuit is low.
Overcurrent	Overcurrent flowed to the IGBT. Motor power line ground fault or short circuit.
Servo Drive overheat	The temperature of the drive radiator exceeded the specified value.
Overload	Operation was performed with torque significantly exceeding the rating for several seconds to several tens of seconds.
Regeneration overload	The regenerative energy exceeds the processing capacity of the Regeneration Resistor.
Encoder communications error	The encoder wiring is disconnected.
Encoder communications data error	Communications cannot be performed between the encoder and the drive.
Error counter overflow	The number of accumulated pulses in the error counter exceeded the set value for the Error Counter Overflow Level (Pn014).
Excessive hybrid error	During fully-closed control, difference between position of load from external encoder and position of motor due to encoder was larger than the number of pulses set by Internal/External Feedback Pulse Error Counter Overflow Level (Pn328).
Overspeed	The motor rotation speed exceeded the maximum number of rotations.
Electronic gear setting error	The set value for the Electronic Gear Ratio (Pn009 to Pn010, Pn500 to Pn503) is not appropriate.
Error counter overflow	Error counter value based on the encoder pulse reference exceeded 2^{29} (536870912).
Interface I/O setting error	An error was detected in the interface I/O signal.
Overrun limit error	The motor exceeded the allowable operating range set in the Overrun Limit Setting (Pn514) with respect to the position command input.
Parameter error	Data in the Parameter Save area was corrupted when the power supply was turned ON and data was read from the EEPROM.
Parameters destruction	The checksum for the data read from the EEPROM when the power supply was turned ON does not match.
Drive prohibition input error	The forward drive prohibition and reverse drive prohibition inputs are both turned OFF.
Excessive analog input	A current exceeding the Excessive Analog Input (Pn424, Pn427 or Pn430) was applied to the analog command input (pin 14).
Absolute encoder system down error **ABS**	The voltage supplied to the absolute encoder is lower than the specified value.
Absolute encoder counter overflow error **ABS**	The multi-rotation counter of the absolute encoder exceeds the specified value.
Absolute encoder overspeed error **ABS**	The motor rotation speed exceeds the specified value when only the battery power supply of the absolute encoder is used.
Absolute encoder 1-rotation counter error **ABS**	A 1-turn counter error was detected.
Absolute encoder multi-rotation counter error **ABS**	A multi-rotation counter error or phase-AB signal error was detected.

Error detected	Description
Absolute encoder status error **ABS**	The rotation of the absolute encoder is higher than the specified value.
Encoder phase-Z error	A phase Z pulse was not detected regularly.
Encoder CS signal error	A logic error was detected in the CS signal.
External encoder communications error	An error was detected in external encoder connection and communications data.
External encoder status error	An external encoder alarm code was detected.
Phases-A, B and Z connection error	An error was generated for connection of phases A, B, and Z of external encoder.
Motor non-conformity	The combination of the Servomotor and Servo Drive is not appropriate. The encoder was not connected when the power supply was turned ON.

Main Circuit and Motor Connections

When wiring the main circuit, use proper wire sizes, grounding systems, and noise resistance.

R88D-KTA5L/-KT01L/-KT02L/-KT04L
R88D-KT01H/KT02H/-KT04H/-KT08H/-KT10H/-KT15H

Main Circuit Connector Specifications (CNA)

Symbol	Name	Function
L1	Main circuit power supply input	R88D-KT□L (50 to 400 W) : Single-phase 100 to 120 VAC (85 to 132 V) 50/60 Hz (200 to 400 W) : 3-phase: 200 to 240 VAC (170 to 264 V) 50/60 Hz R88D-KT□H (50 W to 1.5 kW) : Single-phase: 200 to 240 VAC (170 to 264 V) 50/60 Hz (100 W to 1.5 kW) : 3-phase: 200 to 240 VAC (170 to 264 V) 50/60 Hz Note. Single-phase should connect to L1 or L3.
L2		
L3		
L1C	Control circuit power supply input	R88D-KT□L : Single-phase 100 to 120 VAC (85 to 132 V) 50/60 Hz R88D-KT□H : Single-phase 200 to 240 VAC (170 to 264 V) 50/60 Hz
L2C		

Motor Connector Specifications (CNB)

Symbol	Name	Function	
B1	External Regeneration Resistor connection terminals	Normally B2 and B3 are connected. If there is high regenerative energy, remove the short-circuit bar between B2 and B3 and connect an External Regeneration Resistor between B1 and B2. (KT08H, KT10H, KT15H)	
B2			
B3			
U	Motor connection terminals	Phase U	These are the output terminals to the Servomotor. Be sure to wire them correctly.
V		Phase V	
W		Phase W	

Precautions for Correct Use

- Tighten the ground screws to the torque of 0.7 to 0.8 N•m (M4) or 1.4 to 1.6 N•m (M5).

R88D-KT20H

Main Circuit Connector Specifications (CNA)

Symbol	Name	Function
L1	Main circuit power supply input	R88D-KT□H (2 kW) : 3-phase: 200 to 230 VAC (170 to 253 V) 50/60 Hz
L2		
L3		
L1C	Control circuit power supply input	R88D-KT□H : Single-phase 200 to 230 VAC (170 to 253 V) 50/60 Hz
L2C		

Motor Connector Specifications (CNB)

Symbol	Name	Function	
U	Motor connection terminals	Phase U	These are the output terminals to the Servomotor. Be sure to wire them correctly.
V		Phase V	
W		Phase W	

External Regeneration Resistor Connector Specifications (CNC)

Symbol	Name	Function
B1	External Regeneration Resistor connection terminals	Normally B2 and B3 are connected. If there is high regenerative energy, remove the short-circuit bar between B2 and B3 and connect an External Regeneration Resistor between B1 and B2.
B2		
B3		
NC		Do not connect.

Precautions for Correct Use

- Tighten the ground screws to the torque of 0.7 to 0.8 N•m (M4) or 1.4 to 1.6 N•m (M5).

R88D-KT30H/R88D-KT50H

Main Circuit Terminal Block Specifications

Symbol	Name	Function	
L1	Main circuit power supply input	R88D-KT□H (3 to 5 kW): 3-phase 200 to 230 VAC (170 to 253 V) 50/60 Hz	
L2			
L3			
L1C	Control circuit power supply input	R88D-KT□H : Single-phase 200 to 230 VAC (170 to 253 V) 50/60 Hz	
L2C			
B1	External Regeneration Resistor connection terminals	Normally B2 and B3 are connected. If there is high regenerative energy, remove the short-circuit bar between B2 and B3 and connect an External Regeneration Resistor between B1 and B2.	
B2			
B3			
NC		Do not connect.	
U	Motor connection terminals	Phase U	These are the output terminals to the Servomotor. Be sure to wire them correctly.
V		Phase V	
W		Phase W	

Precautions for Correct Use

- Tighten the terminal block screws to the torque of 0.75 N•m (M4) or 1.5 N•m (M5).
- If the torque for terminal block screws exceeds 1.2 N•m (M4) or 2.0 N•m (M5), the terminal block may be damaged.
- Tighten the fixing screw of the terminal block cover to the torque of 0.2 N•m (M3).
- Tighten the ground screws to the torque of 0.7 to 0.8 N•m (M4) or 1.4 to 1.6 N•m (M5).

R88D-KT06F/R88D-KT10F/R88D-KT15F/R88D-KT20F

Main Circuit Connector Specifications (CNA)

Symbol	Name	Function
L1	Main circuit power supply input	R88D-KT□F (600 W to 2 kW) : 3-phase: 380 to 480 VAC (323 to 528 V) 50/60 Hz
L2		
L3		

Motor Connector Specifications (CNB)

Symbol	Name	Function	
U	Motor connection terminals	Phase U	These are the output terminals to the Servomotor. Be sure to wire them correctly.
V		Phase V	
W		Phase W	

External Regeneration Resistor Connector Specifications (CNC)

Symbol	Name	Function
B1	External Regeneration Resistor connection terminals	Normally B2 and B3 are connected. If there is high regenerative energy, remove the short-circuit bar between B2 and B3 and connect an External Regeneration Resistor between B1 and B2.
B2		
B3		
NC		Do not connect.

Control Circuit Connector Specifications (CND)

Symbol	Name	Function
24 V	Control circuit power supply input	24 VDC ± 15%
0 V		

Precautions for Correct Use

- Tighten the ground screws to the torque of 0.7 to 0.8 N•m (M4) or 1.4 to 1.6 N•m (M5).

R88D-KT30F/R88D-KT50F

Main Circuit Terminal Block Specifications (TB1)

Symbol	Name	Function
24 V	Control circuit power supply input	24 VDC ± 15%
0 V		

Main Circuit Terminal Block Specifications (TB2)

Symbol	Name	Function	
L1	Main circuit power supply input	R88D-KT□H (3 to 5 kW): 3-phase 200 to 230 VAC (170 to 253 V) 50/60 Hz	
L2			
L3			
B1	External Regeneration Resistor connection terminals	Normally B2 and B3 are connected. If there is high regenerative energy, remove the short-circuit bar between B2 and B3 and connect an External Regeneration Resistor between B1 and B2.	
B2			
B3			
NC		Do not connect.	
U	Motor connection terminals	Phase U	These are the output terminals to the Servomotor. Be sure to wire them correctly.
V		Phase V	
W		Phase W	

Precautions for Correct Use

- Tighten the terminal block screws to the torque of 0.75 N•m (M4) or 1.5 N•m (M5).
- If the torque for terminal block screws exceeds 1.2 N•m (M4) or 2.0 N•m (M5), the terminal block may be damaged.
- Tighten the fixing screw of the terminal block cover to the torque of 0.2 N•m (M3).
- Tighten the ground screws to the torque of 0.7 to 0.8 N•m (M4) or 1.4 to 1.6 N•m (M5).

Control I/O Connector Specifications (CN1)

Control I/O Signal Connections and External Signal Processing for Position Control

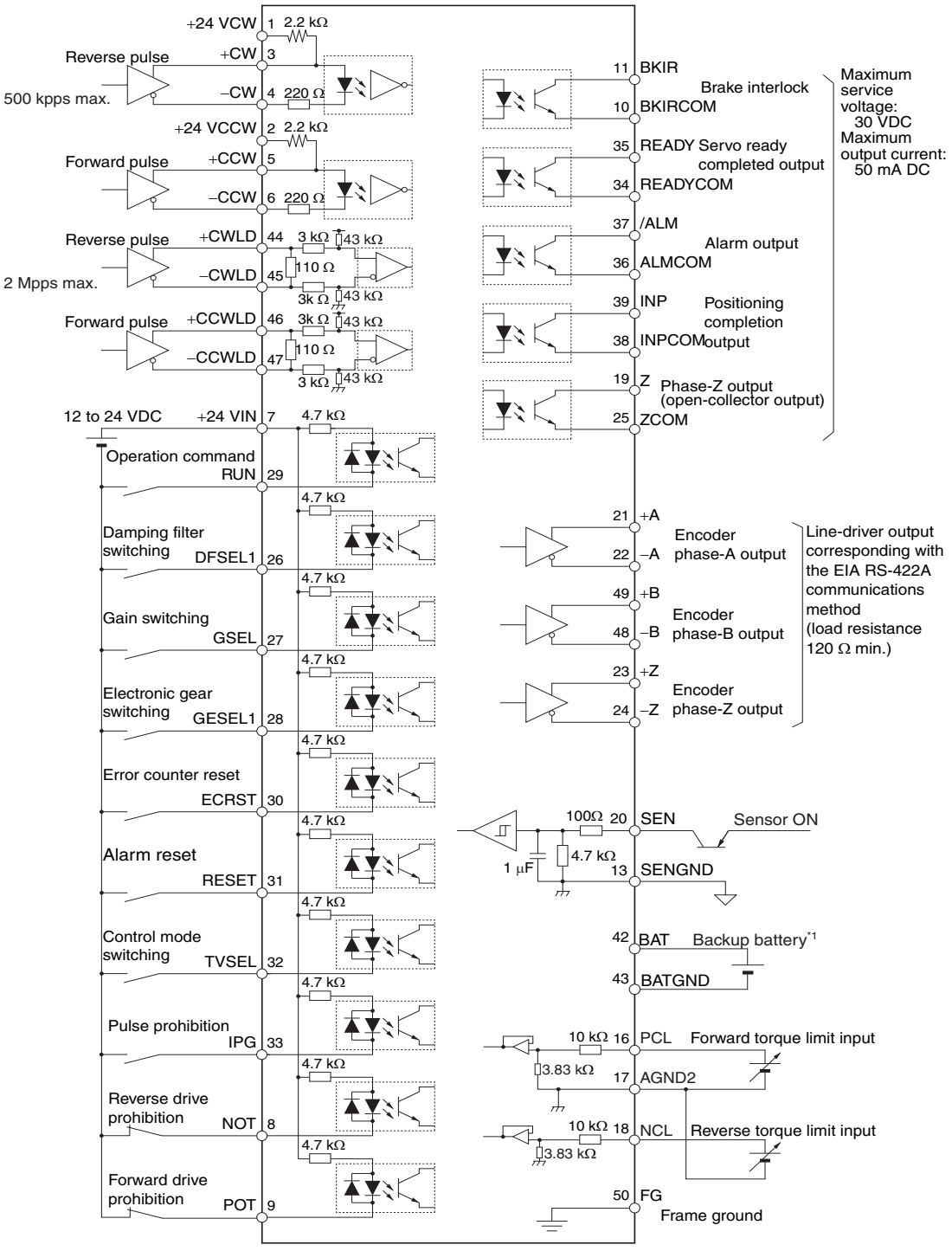

*1. A cable equipped with a battery is not required if a backup battery is connected.

Note 1. The inputs of pins 8, 9 and 26 to 33, and outputs of pins 10, 11, 34, 35, 38 and 39, can be changed via parameter settings.

Note 2. Pins 13, 20, 42 and 43 represent signals which are applicable when an absolute encoder is used.

Control I/O Signal Connections and External Signal Processing for Speed Control

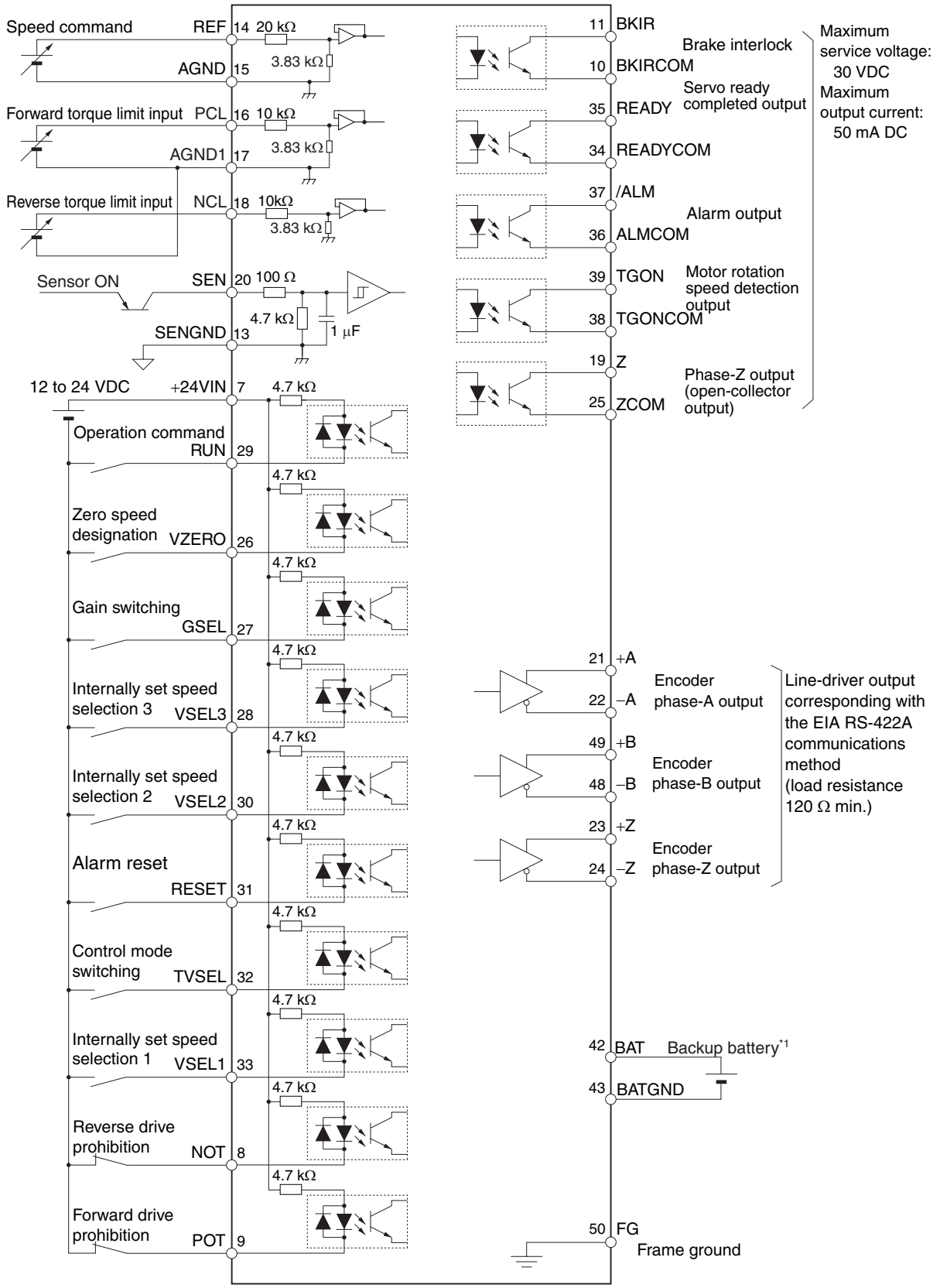

*1. A cable equipped with a battery is not required if a backup battery is connected.

Note 1. The inputs of pins 8, 9 and 26 to 33, and outputs of pins 10, 11, 34, 35, 38 and 39, can be changed via parameter settings.

Note 2. Pins 13, 20, 42 and 43 represent signals which are applicable when an absolute encoder is used.

Control I/O Signal Connections and External Signal Processing for Torque Control

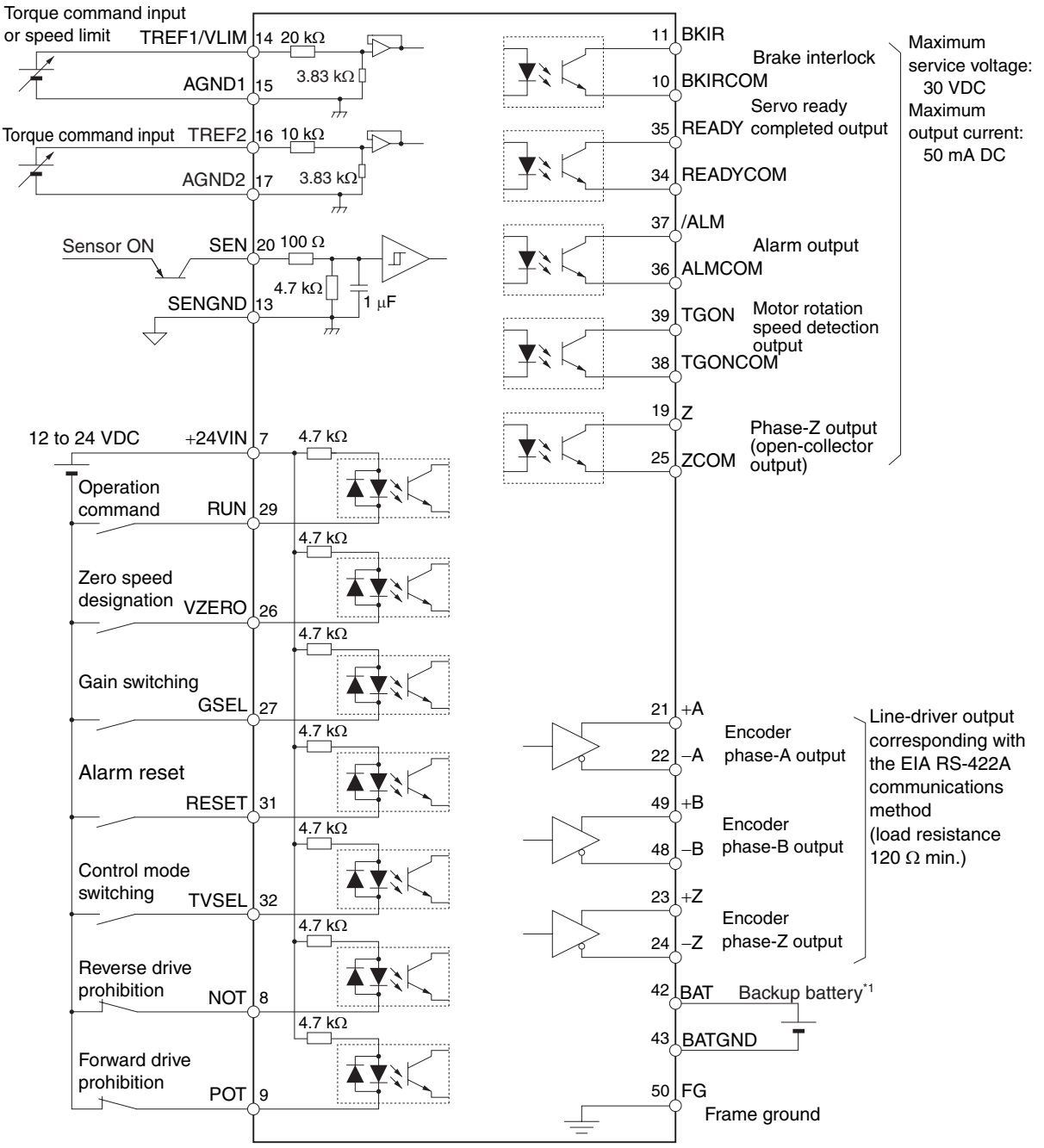

*1. A cable equipped with a battery is not required if a backup battery is connected.

Note 1. The inputs of pins 8, 9 and 26 to 33, and outputs of pins 10, 11, 34, 35, 38 and 39, can be changed via parameter settings.

Note 2. Pins 13, 20, 42 and 43 represent signals which are applicable when an absolute encoder is used.

Control I/O Signal List

CN1 Control Inputs

Pin number	Symbol	Name	Function and interface	Control mode			
				Position	Speed	Torque	Full-closed
1	+24VCW	24-V open-collector input for command pulse	Input terminals for position command pulses for both line driver and open collector. Changes to enable (set value: 0<default setting>) according to the setting of Command Pulse Input Selection (Pn005).	√			√
3	+CW/+puls/+FA	Reverse pulse, feed pulse, or 90° phase difference signal (phase A)					
4	-CW/-puls/-FA						
2	+24VCW	24-V open-collector input for command pulse					
5	+CW/+puls/+FA	Forward pulse, direction signal, or 90° phase difference signal (phase B)					
6	-CW/-puls/-FA						
44	+CWLD	Reverse pulse (input for line driver only)	Input terminals for position command pulses dedicated to the line-driver output. Changes to enable (set value: 1) according to the setting of Command Pulse Input Selection (Pn005).	√			√
45	-CWLD						
46	+CCWLD	Forward pulse (input for line driver only)					
47	-CCWLD						
20	SEN	Sensor ON Input **ABS**	This performs serial transmission of multi-rotation data of the absolute encoder and also outputs 1-rotation data as the initial incremental pulses. This input is enabled by setting the Operation Switch when Using Absolute Encoder (Pn015) to 0 or 2.	√	√	√	
13	SENGND	Signal ground	This is a sensor ON signal ground.				
42	BAT	Backup battery input **ABS**	These are the backup battery connection terminals used when the absolute encoder power is interrupted. (Connection to this terminal is not necessary if you use the absolute encoder battery cable for backup.)	√	√	√	√
43	BATGND						
14	REF	Speed command input	This is an analog input terminal for speed command. Use the Speed Command Scale (Pn302) to change the rotation speed scale for the command input.		√		
	TREF1	Torque command input 1	Provides a torque command input (set value: 0 or 2) according to the setting of Torque Command/Speed Limit Selection (Pn317). Use the Torque Command Scale (Pn319) to change the rotation speed scale for the command input.			√	

Pin number	Symbol	Name	Function and interface	Control mode			
				Position	Speed	Torque	Full-closed
14	VLIM	Speed limit input	Provides a speed limit input (set value: 1) according to the setting of Torque Command/Speed Limit Selection (Pn317). Use the Speed Command Scale (Pn302) to change the limit speed scale for the analog input.			√	
15	AGND1	Analog ground 1	This is an analog signal ground.				
16	PCL	Forward torque limit input	Provides a forward torque limit input (set value: 0 or 4) or forward/reverse torque limit input (set value: 5) according to the setting of Torque Limit Selection (Pn521).	√	√		√
	TREF2	Torque command input 2	Provides a torque command input (set value: 1) according to the setting of Torque Command/Speed Limit Selection (Pn317). Use the Torque Command Scale (Pn319) to change the rotation speed scale for the command input.			√	
17	AGND1	Analog ground 1	This is an analog signal ground.				
18	NCL	Reverse torque limit input	Provides a reverse torque limit input (set value: 0 or 4) according to the setting of Torque Limit Selection (Pn521).	√	√		√
7	+24VIN	12 to 24-VDC power supply input	The positive input terminal of the external power supply (12 to 24 VDC) for sequence inputs	√	√	√	√
8, 9, 26 to 33	SI1 to SI10	Sequence input signal	These allocate the following function and logics according to the settings of Input Signal Selection 1 to 10 (Pn400 to 409).				
	NOT [8]	Reverse drive prohibition input	This performs the drive prohibition input in the reverse direction. Changes to enable (set value: 0 or 2) according to the setting of Drive Prohibition Input Selection (Pn504).	√	√	√	√
	POT [9]	Forward drive prohibition input	This performs the drive prohibition input in the forward direction. Changes to enable (set value: 0 or 2) according to the setting of Drive Prohibition Input Selection (Pn504).	√	√	√	√
	DFSEL1 [26]	Damping filter switching 1	Changes to enable (set value: 1 or 2) according to the setting of Damping Filter Selection (Pn213). If the set value of Damping Filter Selection (Pn213) is 2, switching between 4 settings is possible by combining this with the damping filter switching input 2 (DFSEL2).	√			√

Pin number	Symbol	Name	Function and interface	Control mode			
				Position	Speed	Torque	Full-closed
8, 9, 26 to 33	GSEL [27]	Gain switching	This changes to enable (set value: 2) according to the setting of the Gain Switching Mode (Pn115 for position control, Pn120 for speed control, or Pn124 for torque control). When the signal is OFF and ON, gain 1 and gain 2 change to enable, respectively.	√	√	√	√
	GESEL1 [28]	Electronic gear switching 1	Switches the numerator for electronic gear ratio. You can switch maximum 4 electronic gear ratio numerators by combining with electronic gear switching input 2 (GESEL2).	√			√
	RUN [29]	Operation command input	This turns ON the servo (motor power supply starts).	√	√	√	√
	ECRST [30]	Error counter reset input	Resets the position error counter. An edge (set value: 0) or level (set value: 1) can be selected according to the setting of Error Counter Reset Condition Selection (Pn517).	√			√
	RESET [31]	Alarm reset input	Release the alarm status. The error counter is reset when the alarm is reset. Some alarms cannot be reset with this input.	√	√	√	√
	TVSEL [32]	Control mode switching input	This signal switches the control mode for Servo Drive. Changes to enable (set value: 3 to 5) according to the setting of Control Mode Selection (Pn001).	√	√	√	
	IPG [33]	Pulse prohibition input	Prohibits the position command pulse. Changes to enable (set value: 0) according to the setting of Command Pulse Prohibition Input Setting (Pn518).	√			
	VSEL1 [33]	Internally set speed selection 1	Use this input to select a desired Speed Setting (Pn304 to 311) during the internally set speed operation.		√		
	VSEL2 [30]	Internally set speed selection 2					
	VSEL3 [28]	Internally set speed selection 3					
	TLSEL	Torque limit switching	Switches the torque limit value via ON/OFF. Changes to enable (set value: 3 or 6) according to the setting of Torque Limit Selection (Pn521). The torque limit value and operating direction vary according to the set value.	√	√		√
	DFSEL2	Damping filter switching 2	Changes to enable (set value: 2) according to the setting of Damping Filter Selection (Pn213). Switching between 4 settings is possible by combining this with the damping filter switching input 1 (DFSEL1).	√			√

Pin number	Symbol	Name	Function and interface	Control mode			
				Position	Speed	Torque	Full-closed
8, 9, 26 to 33	GESEL2	Electronic gear switching 2	You can switch maximum 4 electronic gear ratio numerators by combining with electronic gear switching input 1 (GESEL1).	√			√
	VZERO	Zero speed designation input	This signal forcibly sets the speed command to 0. Changes to enable (set value: 1 to 3) according to the setting of Zero Speed Designation Selection (Pn315).		√	√	
	VSIGN	Speed command sign input	Designates the motor rotation direction for speed commands. Changes to enable (set value: 1) according to the setting of Speed Command Direction Selection (Pn301).		√		
	TSIGN	Torque command sign input	This signal designates the motor rotation direction for torque commands. Changes to enable (set value: 1) according to the setting of Torque Command Direction Selection (Pn318).			√	√
	EMG-STOP	Emergency stop input	This is an emergency stop input. When input, this becomes an emergency stop input error and thereby stop the motor.	√	√	√	√
	JSEL	Inertia ratio switching input	This signal switches between inertia ratio 1 and inertia ratio 2.	√	√	√	√

- Be cautious that allocatable pin numbers are fixed for the following functions.
  Error counter reset input (ECRST): Pin 30 only
  Command pulse input prohibition input (IPG): Pin 33 only

- The number in brackets indicates the pin number (allocation) at default setting. (The allocations vary according to the control mode.)

CN1 Control Outputs

Pin number	Symbol	Name	Function and interface	Control mode			
				Position	Speed	Torque	Full-closed
21	+A	Encoder phase A +output	Encoder signals (or external encoder signals during fully-closed control) are output according to the setting of Encoder Dividing Numerator (Pn011). This is the line-driver output (equivalent to RS-422). The maximum output frequency is 4 Mpps. Phase Z is output for encoder signals (or external encoder signals during fully-closed control). This is the line-driver output (equivalent to RS-422).	√			√
22	-A	Encoder phase A -output					
49	+B	Encoder phase B +output					
48	-B	Encoder phase B -output					
23	+Z	Encoder phase Z +output					
24	-Z	Encoder phase Z -output					

Pin number	Symbol	Name	Function and interface	Control mode			
				Position	Speed	Torque	Full-closed
19	Z	Encoder phase-Z output	Phase Z is output for encoder signals (or external encoder signals during fully-closed control). Open-collector output	√			√
25	ZCOM	Encoder phase-Z output common					
10, 11, 34 to 39	SO1 to SO4	Sequence output signal	These signals allocate the following functions according to the settings of Output Signal Selections 1 to 4 (Pn410 to 413).				
	BKIR [11]	Brake interlock output	Outputs the timing signal for operating the electromagnetic brake on a motor.	√	√	√	√
	BKIRCOM [10]						
	READY [35]	Servo ready completed	This output signal indicates the Drive is ready to be energized. It is turned ON when the control and main power supply is established and not in alarm status.	√	√	√	√
	READYCOM [34]						
	/ALM [37]	Servo alarm	The output is OFF when an alarm is generated for the Servo Drive.	√	√	√	√
	ALMCOM [36]						
	INP1 [39]	Positioning completion output 1	If the position error is equal to Positioning Completion Range 1 (Pn431) or less, this output turns ON according to the setting condition of Positioning Completion Condition Selection (Pn432).	√			√
	INP1COM [38]						
	TGON [39]	Motor rotation speed detection output	This output turns ON when the motor rotation speed reaches the speed set in Rotation Speed for Motor Rotation Detection (Pn436).		√	√	
	TGONCOM [38]						
	TLIMT	Torque limit output	This output turns ON while the torque is limited.	√	√		√
	TLIMTCOM						
	ZSP	Zero speed detection signal	This output turns ON when the motor rotation speed is equal to Zero Speed Detection (Pn434) or less.	√	√	√	√
	ZSPCOM						
	VCMP	Speed conformity output	This output turns ON when the command speed corresponds to the motor rotation speed. This output turns ON when the difference between the command speed and motor rotation speed is inside the setting range of Speed Conformity Detection Width (Pn435).		√	√	
	VCMPCOM						
	INP2	Positioning completion output 2	If the position error is equal to Positioning Completion Range 2 (Pn442) or less, this output turns ON according to the setting condition of Positioning Completion Condition Selection (Pn432).	√			√
	INP2COM						
	WARN1	Warning output 1	This output turns ON according to the setting condition of Warning Output Selection 1 (Pn440).	√	√	√	√
	WARN1COM						

Pin number	Symbol	Name	Function and interface	Control mode			
				Position	Speed	Torque	Full-closed
10, 11, 34 to 39	WARN2	Warning output 2	This output turns ON according to the setting condition of Warning Output Selection 1 (Pn440).	√	√	√	√
	WARN2COM						
	P-CMD	Position command status output	This output turns ON when a positioning command is input.	√			√
	P-CMDCOM						
	V-LIMIT	Speed limiting output	This turns ON during torque control or speed limit status.			√	
	V-LIMITCOM						
	ALM-ATB	Alarm clear attribute output	This output turns ON when an alarm occurs or the alarm can be cleared.	√	√	√	√
	ALM-ATBCOM						
	V-CMD	Speed command status output	This output turns ON during speed control or when a speed command is input.		√		
	V-CMDCOM						

- You cannot change the allocation for servo alarm output (/ALM). (The allocation is fixed.)
- The number in brackets indicates the pin number (allocation) at default setting. (The allocations vary according to the control mode.)

CN1 Pin Arrangement

2	+24VCCW	24-V open-collector input for command pulse	1	+24VCW	24-V open-collector input for command pulse	27	SI4	General-purpose input 4	26	SI3	General-purpose input 3
4	–CW/ –PULS/–FA	Reverse pulses, feed pulses, or 90° phase difference signal (phase A)	3	+CW/ +PULS/+FA	Reverse pulses, feed pulses, or 90° phase difference signal (phase A)	29	SI6	General-purpose input 6	28	SI5	General-purpose input 5
6	–CCW/ –SIGN/–FB	Forward pulse, direction signal, or 90° phase difference signal (phase B)	5	+CCW/ +SIGN/+FB	Forward pulse, direction signal, or 90°phase difference signal (phase B)	31	SI8	General-purpose input 8	30	SI7	General-purpose input 7
8	SI1	General-purpose input 1	7	+24VIN	12 to 24-VDC power supply input	33	SI10	General-purpose input10	32	SI9	General-purpose input 9
10	SO1COM	General-purpose output 1 common	9	SI2	General-purpose input 2	35	SO2	General-purpose output 2	34	SO2COM	General-purpose output 2 common
12		*	11	SO1	General-purpose input 1	37	/ALM (SO3)	Alarm output (general-purpose output 3)	36	ALMCOM (SO3COM)	Alarm output common (general-purpose output 3 common)
14	REF/TREF1/ VLIM	Speed command input, torque command input 1, speed limit input	13	SENGND	Signal ground	39	SO4	General-purpose output 4	38	SO4COM	General-purpose output 4 common
16	PCL/TREF2	Forward torque limit input, torque command input 2	15	AGND1	Analog ground 1	41		*	40		*
18	NCL	Reverse torque limit input	17	AGND2	Analog ground 2	43	BATGND	Absolute encoder backup battery input	42	BAT	Absolute encoder backup battery input
20	SEN	Sensor ON undefined	19	Z	Phase-Z output (open collector)	45	–CWLD	Reverse pulse (input for line driver only)	44	+CWLD	Reverse pulse (input for line driver only)
22	–A	Encoder phase A–output	21	+A	Encoder phase A+output	47	–CCWLD	Forward pulse (input for line driver only)	46	+CCWLD	Forward pulse (input for line driver only)
24	–Z	Encoder phase Z–output	23	+Z	Encoder phase Z+output	49	+B	Encoder phase B+output	48	–B	Encoder phase B–output
			25	ZCOM	Phase-Z (open collector) common				50		*

Note.Do not connect anything to unused pins (those marked with *).

For general-purpose inputs 1 to 10 (SI1 to 10) and general-purpose outputs (SO1, SO2 and SO4), use user parameters Pn400 to Pn409 (Input Signal Selections 1 to 10) and Pn410 to Pn413 (Output Signal Selections 1 to 4) to set the function allocations.

The alarm output (/ALM) is fixed to general-purpose output 3.

To use an absolute encoder, connect a battery to either Pin 42 which is the backup battery input, or 43 which is the battery holder for absolute encoder cable. (Never connect to both.)

Connectors for CN1 (Pin 50)

Name	Model	Manufacturer
Drive connector	52986-3679	Molex Japan
Cable plug	10150-3000PE	Sumitomo 3M
Cable case (shell kit)	10350-52A0-008	

Control Input Circuits

Speed Command Input, Torque Command Input and Speed Limit Input

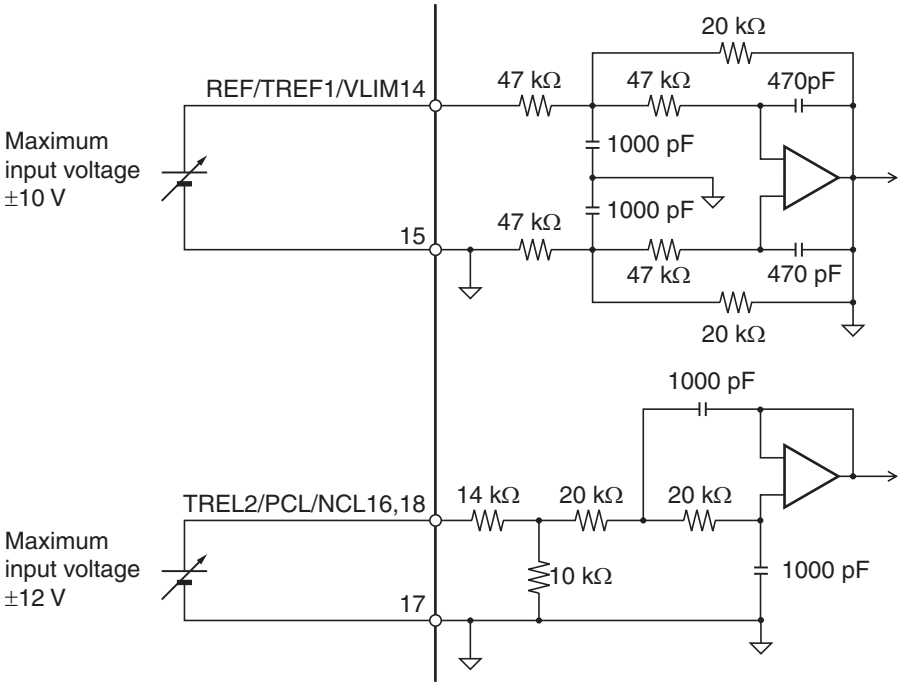

- The maximum allowable input voltage is ± 10 V for each input. The VR must be 2 kΩ with B characteristics and 1/2 W minimum. R must be 200 Ω and 1/2 W minimum.

Position Command Pulse (Line Receiver Input)

When connecting with a line driver and a line receiver, up to 4 Mpps will be available.
(+CWLD: 44, –CWLD: 45, +CCWLD: 46, –CCWLD: 47)

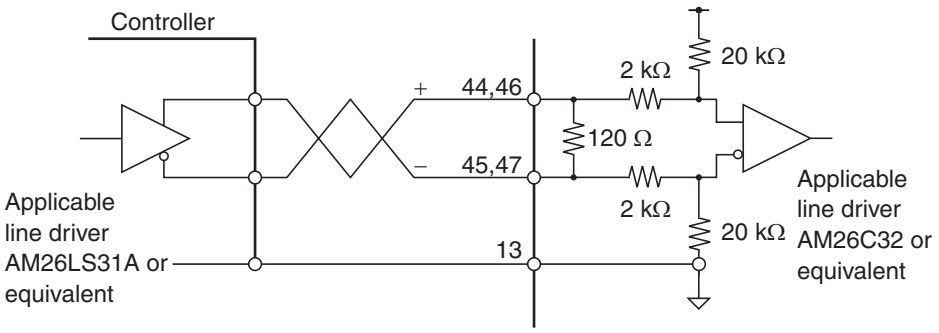

- The shielded twisted-pair cable should not exceed 20 m in length.

Position Command Pulse (Photocoupler Input)

Line Driver Input (500 kpps Maximum)

(+CW: 3, –CW: 4, +CCW: 5, –CCW: 6)

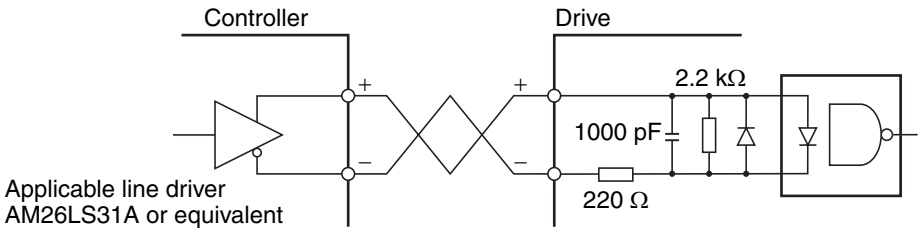

Precautions for Correct Use

- The twisted-pair cable should not exceed 10 m in length.

Open Collector Input

- External 24-V power supply without a Current Limit Resistor (200 kpps maximum) (+24 VCW: 1, –CW: 4, +24 VCCW: 2, –CCW: 6)

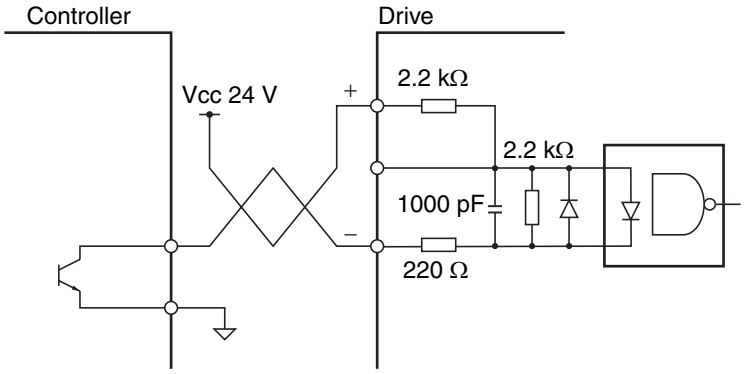

- External control power supply (200 kpps maximum) (+CW: 3, –CW: 4, +CCW: 5, –CCW: 6)

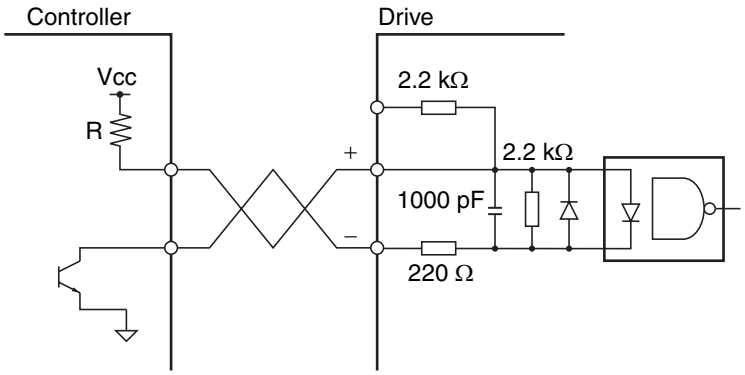

Select a Current Limit Resistor (R) appropriate for Vcc.

$$\frac{Vcc - 1.5}{R + 220} \approx 10mA \quad (7 \text{ to } 15 \text{ mA})$$

VCC	R
24 V	2 kΩ (1/2 W)
12 V	1 kΩ (1/2 W)
5 V	0 Ω (short)

Precautions for Correct Use

- The open collector wiring should not exceed 2 m in length.

General-purpose Input

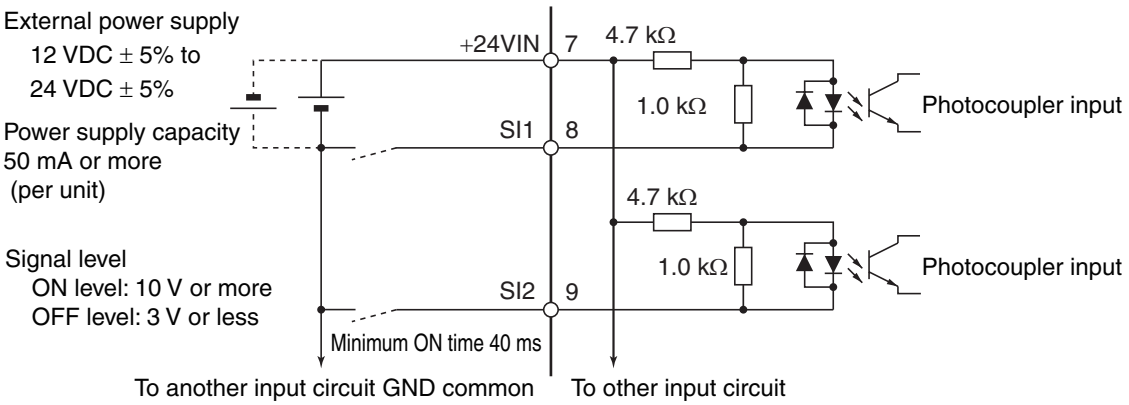

Sensor Input

Sensor ON Input ABS

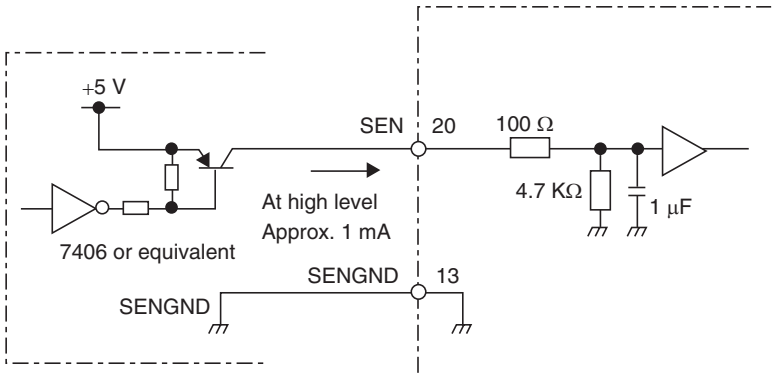

- A PNP transistor is recommended.
- The signal level is as follows.
  H level: 2.0 V or more, L level: 0.8 V or less

Control Input Details

Details on the input pins for the CN1 connector are described here.

High-speed Photocoupler Input

Pin 3: +Reverse pulse (+CW), +feed pulse (+PULS), or +phase A (+FA)
Pin 4: –Reverse pulse (–CW), –feed pulse (–PULS), or –phase A (–FA)
Pin 5: +Forward pulse (+CCW), +direction signal (+SIGN), or +phase B (+FB)
Pin 6: –Forward pulse (–CCW), –direction signal (–SIGN), or –phase B (–FB)

Function

- The functions of these signals depend on the settings of the Command Pulse Rotation Direction Switching Selection (Pn006) and the Command Pulse Mode Selection (Pn007).

Pn005 Set value	Pn006 Set value	Pn007 Set value	Command pulse mode	Input pins	Motor forward command	Motor reverse command
0	0	0/2	90° phase difference signals (quadruple multiplier)	3: +FA 4: –FA 5: +FB 6: –FB	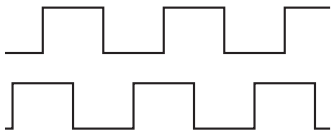	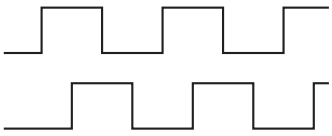
		1	Reverse pulse/forward pulse	3: +CW 4: –CW 5: +CCW 6: –CCW	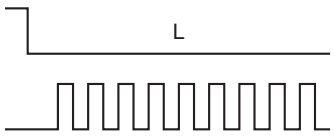	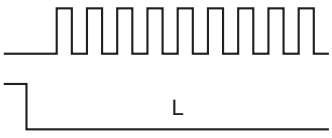
		3	Feed pulse/ direction signal	3: +PULS 4: –PULS 5: +SIGN 6: –SIGN	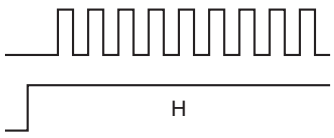	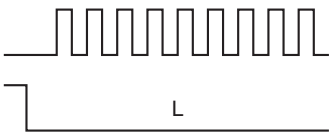

Note 1. If the Command Pulse Rotation Direction Switching Selection (Pn006) is set to 1, the rotation direction will be reversed.

Note 2. If the photocoupler LED is turned ON, each signal will go high as shown above.

Command Pulse Timing for Photocoupler Inputs

Command pulse mode	Timing
Feed pulse/direction signal Maximum input frequency Line driver: 500 kpps Open collector: 200 kpps	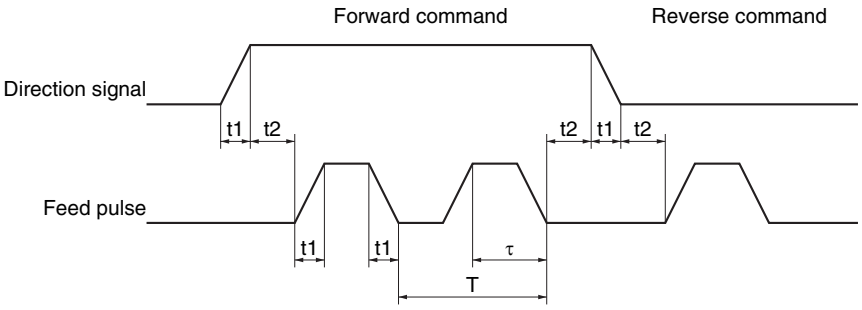 At 200 kpps t1 ≤ 0.5 μs t2 > 2.5 μs τ ≥ 2.5 μs T ≥ 5.0 μs (τ/T) × 100 ≤ 50 (%) At 500 kpps t1 ≤ 0.1 μs t2 > 1.0 μs τ ≥ 1.0 μs T ≥ 2.0 μs (τ/T) × 100 ≤ 50 (%)
Reverse pulse/forward pulse Maximum input frequency Line driver: 500 kpps Open collector: 200 kpps	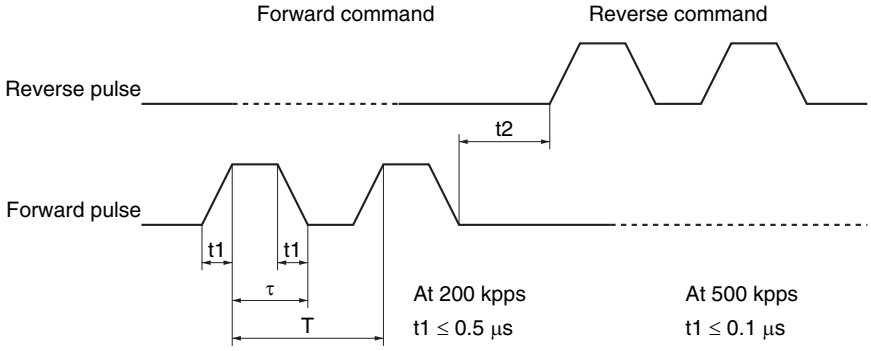 At 200 kpps t1 ≤ 0.5 μs t2 > 2.5 μs τ ≥ 2.5 μs T ≥ 5.0 μs (τ/T) × 100 ≤ 50 (%) At 500 kpps t1 ≤ 0.1 μs t2 > 1.0 μs τ ≥ 1.0 μs T ≥ 2.0 μs (τ/T) × 100 ≤ 50 (%)
90° phase difference signals Maximum input frequency Line driver: 500 kpps Open collector: 200 kpps	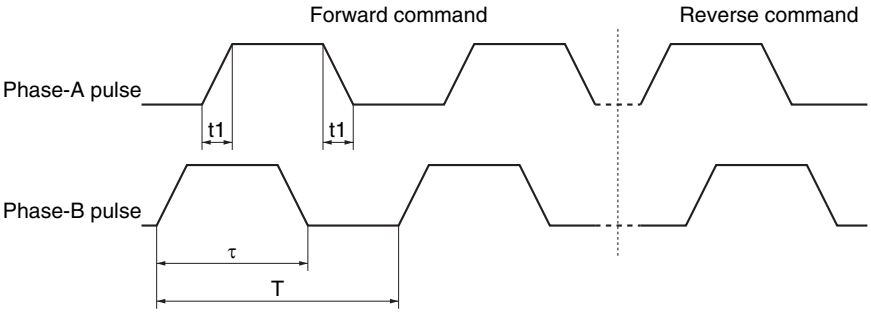 At 200 kpps t1 ≤ 0.5 μs τ ≥ 10 μs T ≥ 20 μs (τ/T) × 100 ≤ 50 (%) At 500 kpps t1 ≤ 0.1 μs τ ≥ 4.0 μs T ≥ 8.0 μs (τ/T) × 100 ≤ 50 (%)

Line Receiver Input

Pin 44: +Reverse pulse (+CW), +feed pulse (+PULS), or +phase A (+FA)
Pin 45: –Reverse pulse (–CW), –feed pulse (–PULS), or –phase A (–FA)
Pin 46: +Forward pulse (+CCW), +direction signal (+SIGN), or +phase B (+FB)
Pin 47: –Forward pulse (–CCW), –direction signal (–SIGN), or –phase B (–FB)

Function

- The functions of these signals depend on the settings of the Command Pulse Rotation Direction Switching Selection (Pn006) and the Command Pulse Mode Selection (Pn007).

Pn005 Set value	Pn006 Set value	Pn007 Set value	Command pulse mode	Input pins	Motor forward command	Motor reverse command
1	0	0/2	90° phase difference signals (quadruple multiplier)	44: +FA 45: –FA 46: +FB 47: –FB	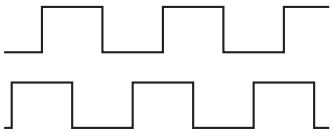	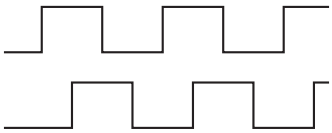
		1	Reverse pulse/ forward pulse	44: +CW 45: –CW 46: +CCW 47: –CCW	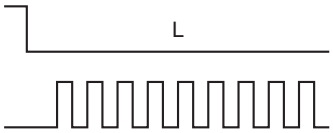	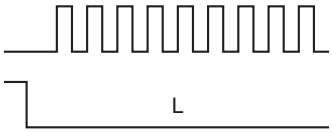
		3	Feed pulse/ direction signal	44: +PULS 45: –PULS 46: +SIGN 47: –SIGN	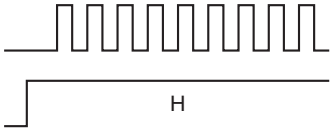	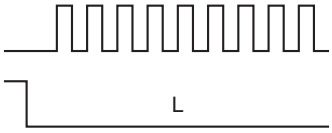

Note 1. If the Command Pulse Rotation Direction Switching Selection (Pn006) is set to 1, the rotation direction will be reversed.

Command Pulse Timing for Line Receiver Inputs

Command pulse mode	Timing
Feed pulse/direction signal Maximum input frequency Line driver: 4 Mpps	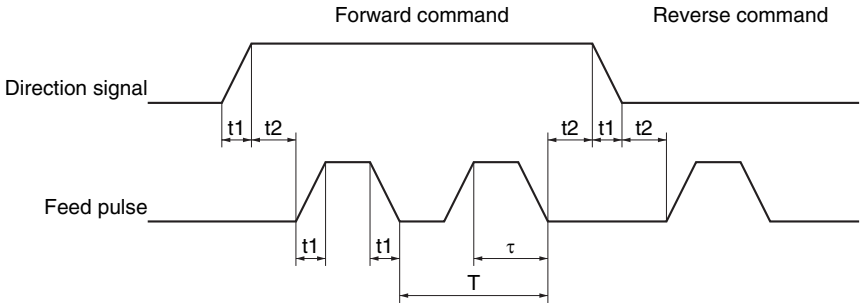 t1 ≤ 20 ns t2 > 500 ns τ ≥ 250 ns T ≥ 500 ns (τ/T) × 100 ≤ 50 (%)
Reverse pulse/forward pulse Maximum input frequency Line driver: 4 Mpps	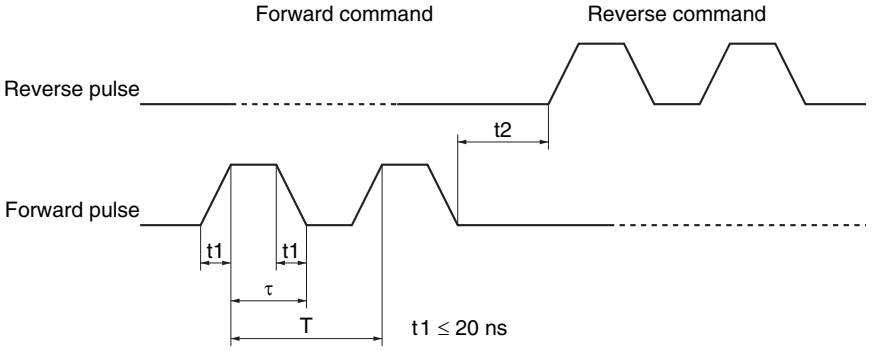 t1 ≤ 20 ns t2 > 500 ns τ ≥ 250 ns T ≥ 500 ns (τ/T) × 100 ≤ 50 (%)
90° phase difference signals Maximum input frequency Line driver: 4 Mpps	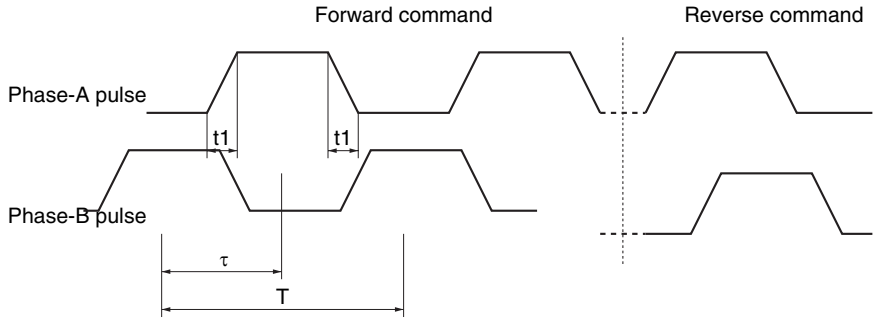 t1 ≤ 20 ns τ ≥ 4.0 μs T ≥ 8.0 μs (τ/T) × 100 ≤ 50 (%)

Sensor ON Input (SEN)

Pin 20: Sensor ON input (SEN)
Pin 13: Signal ground (SENGND)

Function

This input changes to enable (set value: 1) according to the setting of Absolute Interface Function Selection (Pn616).
When the SEN signal turns ON, this performs serial transmission of multi-rotation data of the absolute encoder and also outputs 1-rotation data as the initial incremental pulses.
If the SEN signal is OFF, motor power supply is not possible even when the RUN signal (Operation command) is input. The RUN signal changes to enable after the SEN signal turns ON and the normal operation of encoder becomes ready.

Backup Battery Input (BAT)

Pin 42: Backup battery +input (BAT)
Pin 43: Backup battery –input (BATGND)

Function

- These are the backup battery connection terminals used when the absolute encoder power is interrupted.
- Normally, the battery is connected to the battery holder for the absolute encoder battery cable. Do not connect anything to these terminals.

Precautions for Correct Use

Be sure not to connect to both of the absolute encoder battery cable and the backup battery inputs at the same time. Such connection may result in malfunction.

Speed Command Input (REF), Torque Command Input (TREF1) and Speed Limit Input (VLIM)

Pin 14: Speed command input (REF), torque command Input (TREF1) and speed limit input (VLIM)
Pin 15: Analog input ground (AGND1)

Function

- During speed control
  Speed command is input. Use the Speed Command Scale (Pn302) to change the rotation speed scale for the command input.
- During torque control
  This signal provides either a torque command input (set value: 0 or 2) or speed limit input (set value: 1) according to the setting of Torque Command/Speed Limit Selection (Pn317).
  In the case of torque command input 1 (TREF1), you can use Torque Command Scale (Pn319) to change the rotation speed scale relative to the command input.
  In the case of speed limit input (VLIM), you can use the Speed Command Scale (Pn302) to change the limit speed scale relative to the analog input.

Torque Command Input 2 (TREF2) and Forward Torque Limit Input (PCL)

Pin 16: Torque command input 2 (TREF2) and forward torque limit input (PCL)
Pin 17: Analog input ground 2 (AGND2)

Function

- During position control, speed control or fully-closed control
  This signal provides a forward torque limit input (set value: 0 or 4) or forward/reverse torque limit input (set value: 5) according to the setting of Torque Limit Selection (Pn521).
  You can use Analog Torque Limit Scale (Pn527) to change the torque limit scale relative to the analog input.
- During torque control
  This signal provides a torque command input (set value: 1) according to the setting of Torque Command/Speed Limit Selection (Pn317).
  In the case of torque command input 2 (TREF2), you can use Torque Command Scale (Pn319) to change the rotation speed scale relative to the command input.

Reverse Torque Limit Input (NCL)

Pin 18: Reverse torque limit input (NCL)
Pin 17: Analog input ground 2 (AGND2)

Function

- During position control, speed control or fully-closed control
  This signal provides a reverse torque limit input (set value: 0 or 4) according to the setting of Torque Limit Selection (Pn521).
  You can use Analog Torque Limit Scale (Pn527) to change the torque limit scale relative to the analog input.

Operation command (RUN)

Pin 29: Operation command (RUN)
This is the allocation at default setting. You can change the logics and allocations for input terminals (CN1 to 8, 9 and 26 to 33) according to the settings of Input Signal Selection 1 to 10 (Pn400 to 409).
You must always allocate the operation command (RUN). If it is not allocated, the servo will not turn ON.

Function

This input turns ON the power drive circuit for the main circuit of the Servo Drive. If this signal is not input (servo OFF), the motor cannot drive.

Forward Drive Prohibition Input (POT) and Reverse Drive Prohibition Input (NOT)

Pin 9: Forward drive prohibition input (POT)
Pin 8: Reverse drive prohibition input (NOT)
This is the allocation at default setting. Note, however, that both signals are set to disable (drive prohibition is disabled). You can use Drive Prohibition Input Setting (Pn504) to change these settings. Also, you can change the logics and allocations for input terminals (CN1 to 8, 9 and 26 to 33) according to the settings of Input Signal Selection 1 to 10 (Pn400 to 409).

Function

These two signals are the inputs to prohibit forward and reverse rotation (overtravel inputs).
If Drive Prohibition Input Setting (Pn504) is 1, you can use the setting of Stop Selection (Pn505) to select the operation to be taken upon input of each prohibit signal.
If Drive Prohibition Input Setting (Pn504) is 2, drive prohibition input protection (E380) actuates upon input of a drive prohibition.

Alarm Reset Input (RESET)

Pin 31: Alarm reset input (RESET)
This is the allocation at default setting. You can change the logics and allocations for input terminals (CN1 to 8, 9 and 26 to 33) according to the settings of Input Signal Selection 1 to 10 (Pn400 to 409).
The input logic for the alarm reset input (RESET) is always NO. (You cannot set NC logic.)

Function

It is the external reset input for servo alarm. (A reset occurs at the rising edge of this input.)
Inputting for 120 ms or more releases an alarm condition.
An alarm reset also resets the content of the error counter, upon which the position loop becomes no longer effective.
Eliminate the cause of the alarm before resuming operation. To prevent danger, turn OFF the Operation command (RUN) first, then input the alarm reset signal.
Some alarms cannot be reset with this input.

Error Counter Reset Input (ECRST)

Pin 30: Error counter reset input (ECRST)
This is the allocation at default setting. You can change the functions for input terminals (CN1 to 8, 9 and 26 to 33) according to the settings of Input Signal Selection 1 to 10 (Pn400 to 409).
You can only allocate the error counter reset input (ECRST) to pin 30 (SI7). Allocating to any other terminal generates an error counter reset signal allocation error (A332).
The input logic for the error counter reset input (ECRST) is always NO. (You cannot set NC logic.)

Function

Inputting the error counter reset resets the content of the error counter, upon which the position loop becomes no longer effective.
You can use Error Counter Reset Condition Selection (Pn517) to set the status (level) signal (ON) or differential (rising edge) signal (from OFF to ON).
Input the differential signal for at least 100 μs, or status signal for at least 1 ms. A reset may not occur if the time is shorter.

Control Mode Switching (TVSEL)

Pin 32: Control mode switching (TVSEL)
This is the allocation at default setting. You can change the logics and allocations for input terminals (CN1 to 8, 9 and 26 to 33) according to the settings of Input Signal Selection 1 to 10 (Pn400 to 409).

Function

If the Control mode Selection (Pn001) is set to 3 to 5, the Control mode can be switched as given in the following table.

Pn001 set value	OFF (first control mode)	ON (second control mode)
3	Position control	Speed control
4	Position control	Torque control
5	Speed control	Torque control

Gain Switching (GSEL)

Pin 27: Gain switching (GSEL)
This is the allocation at default setting. You can change the logics and allocations for input terminals (CN1 to 8, 9 and 26 to 33) according to the settings of Input Signal Selection 1 to 10 (Pn400 to 409).

Function

This signal changes to enable (set value: 2) according to the setting of the Gain Switching Mode (Pn115 for position control, Pn120 for speed control, or Pn124 for torque control).
When the signal is OFF and ON, gain 1 and gain 2 change to enable, respectively.

Damping Filter Switching 1 (DFSEL1) and Damping Filter Switching 2 (DFSEL2)

Pin 26: Damping filter switching 1 (DFSEL1)
No allocation: Damping filter switching 2 (DFSEL2)
This is the allocation at default setting. You can change the logics and allocations for input terminals (CN1 to 8, 9 and 26 to 33) according to the settings of Input Signal Selection 1 to 10 (Pn400 to 409).

Function

Use the sequence signal to switch among the 4 filters for use in damping control when the setting of Damping Filter Selection (Pn213) is enable (set value: 1 or 2).

Pn213 set value	DFSEL1	DFSEL2	Damping filter 1	Damping filter 2	Damping filter 3	Damping filter 4
1	OFF	–	Enabled		Enabled	
	ON	–		Enabled		Enabled
2	OFF	OFF	Enabled			
	ON	OFF		Enabled		
	OFF	ON			Enabled	
	ON	ON				Enabled

Electronic Gear Switching 1 (GESEL1) and Electronic Gear Switching 2 (GESEL2)

Pin 28: Electronic gear switching 1 (GESEL1)
No allocation: Electronic gear switching 2 (GESEL2)
This is the allocation at default setting. You can change the logics and allocations for input terminals (CN1 to 8, 9 and 26 to 33) according to the settings of Input Signal Selection 1 to 10 (Pn400 to 409).

Function

Use these 2 signals to switch among up to 4 electronic gear ratio numerators.

GESEL1	GESEL2	Electronic Gear 1	Electronic Gear 2	Electronic Gear 3	Electronic Gear 4
OFF	OFF	Pn009 valid			
ON	OFF		Pn500 valid		
OFF	ON			Pn501 valid	
ON	ON				Pn502 valid

• Electronic Gear Ratio Denominator (Pn010) is a common setting.

Pulse Prohibition Input (IPG)

Pin 33: Pulse prohibition input (IPG)
This is the allocation at default setting. However, Command Pulse Prohibition Input (Pn518) is set to disable (set value: 1). To use this, change Pn518 to enable (set value: 0). You can change the functions for input terminals (CN1 to 8, 9 and 26 to 33) according to the settings of Input Signal Selection 1 to 10 (Pn400 to 409).
You can only allocate the pulse prohibition input (ECRST) to pin 33 (SI10). Allocating this input to any other terminal generates a pulse prohibition input allocation error (A337).

Function

You can use this input to forcibly stop the command pulse input.
When this input is ON, the drive ignores the command pulse input and does not count pulses.

Internally Set Speed Selection 1, 2 and 3 (VSEL1, 2 and 3)

Pin 33: Internally set speed selection 1 (VSEL1) Pin 30: Internally set speed selection 2 (VSEL2)
Pin 28: Internally set speed selection 3 (VSEL3)
This is the allocation at default setting. However, Command Speed Selection (Pn300) is set to disable (set value: 0). To use this, change Command Speed Selection (Pn300) to enable (set value: 1 to 3). You can change the logics and allocations for input terminals (CN1 to 8, 9 and 26 to 33) according to the settings of Input Signal Selection 1 to 10 (Pn400 to 409).

Function

Perform speed control according to the internal speed set value in the parameter.
You can select from up to 8 internal speed set values.

Pn300 set value	VSEL1	VSEL2	VSEL3	Speed command selection
1	OFF	OFF	–	No. 1 Internally Set Speed (Pn304)
	ON	OFF	–	No. 2 Internally Set Speed (Pn305)
	OFF	ON	–	No. 3 Internally Set Speed (Pn306)
	ON	OFF	–	No. 4 Internally Set Speed (Pn307)
2	OFF	OFF	–	No. 1 Internally Set Speed (Pn304)
	ON	OFF	–	No. 2 Internally Set Speed (Pn305)
	OFF	ON	–	No. 3 Internally Set Speed (Pn306)
	ON	OFF	–	Analog speed command input (REF)
3	OFF	OFF	OFF	No. 1 Internally Set Speed (Pn304)
	ON	OFF	OFF	No. 2 Internally Set Speed (Pn305)
	OFF	ON	OFF	No. 3 Internally Set Speed (Pn306)
	ON	OFF	OFF	No. 4 Internally Set Speed (Pn307)
	OFF	OFF	ON	No. 5 Internally Set Speed (Pn308)
	ON	OFF	ON	No. 6 Internally Set Speed (Pn309)
	OFF	ON	ON	No. 7 Internally Set Speed (Pn310)
	ON	OFF	ON	No. 8 Internally Set Speed (Pn311)

To use the internally set speeds, use NC contacts for the zero speed designation input (VZERO). (If this is OFF, the speed command becomes 0.)The zero speed designation input (VZERO) is set to disable (set value: 0) by default. To use this, change Zero Speed Designation Selection (Pn315) to enable (set value: 1 to 2).
(If the zero speed designation input is not used, the motor turns at No. 1 Internally Set Speed (Pn304) when the servo turns ON.)

Zero Speed Designation (VZERO)

No allocation: Zero speed designation (VZERO)
There is no allocation at default setting. Also, Zero Speed Designation Selection (Pn315) is set to disable (set value: 1). You can change the logics and allocations for input terminals (CN1 to 8, 9 and 26 to 33) according to the settings of Input Signal Selection 1 to 10 (Pn400 to 409).

Function

You can use this input to forcibly change the speed command to 0.
This signal changes to enable (set value: 1 to 3) according to the setting of Zero Speed Designation Selection (Pn315).

Pn315 set value	Operation when ON
0	Zero speed designation is disabled.
1	The speed command becomes 0.
2	The speed command becomes 0, and a position lock occurs at a motor rotation speed equal to Position Lock Level Setting (Pn316) or less.
3	A position lock occurs at a command speed equal to Position Lock Level Setting (Pn316) or less.

Speed Command Sign Input (VSIGN)

No allocation: Speed command sign designation (VSIGN)
There is no allocation at default setting. Also, Speed Command Direction Selection (Pn301) is set to disable (set value: 0). You can change the logics and allocations for input terminals (CN1 to 8, 9 and 26 to 33) according to the settings of Input Signal Selection 1 to 10 (Pn400 to 409).

Function

You can use this input to designate the rotation direction relative to the speed command.
If Speed Command Direction Selection (Pn301) is enable (set value: 1), the polarity of analog command input and rotation direction at internal command speed become disabled.

Pn301 set value	Pn303 set value	VSIGN	Analog speed command input (REF)	Motor rotation direction
0	0	Operation Disabled	+Voltage (0 to +10 V)	Forward operation
			–Voltage (–10 to 0 V)	Reverse operation
	1		+Voltage (0 to +10 V)	Reverse operation
			–Voltage (–10 to 0 V)	Forward operation
1	Setting Disabled	OFF	+Voltage (0 to +10 V)	Forward operation
			–Voltage (–10 to 0 V)	
		ON	+Voltage (0 to +10 V)	Reverse operation
			–Voltage (–10 to 0 V)	

Pn301 set value	VSIGN	Internal command speed	Motor rotation direction
0	OFF	+ (Forward command: 0 to +20,000 r/min)	Forward operation
		– (Reverse command: –20,000 to 0 r/min)	Reverse operation
	ON	+ (Forward command: 0 to +20,000 r/min)	Forward operation
		– (Reverse command: –20,000 to 0 r/min)	Reverse operation
1	OFF	+ (Forward command: 0 to +20,000 r/min)	Forward operation
		– (Reverse command: –20,000 to 0 r/min)	
	ON	+ (Forward command: 0 to +20,000 r/min)	Reverse operation
		– (Reverse command: –20,000 to 0 r/min)	

Torque Limit Switching (TLSEL)

No allocation: Torque Limit Switching (TLSEL)
There is no allocation at default setting. You can change the logics and allocations for input terminals (CN1 to 8, 9 and 26 to 33) according to the settings of Input Signal Selection 1 to 10 (Pn400 to 409).

Function

This input is used for switching the torque limit value.
This signal changes to enable (set value: 3 or 6) according to the setting of Torque Limit Selection (Pn521).

Pn521 set value	TLSEL	Forward	Reverse
3	OFF	Pn013 (No. 1 Torque Limit)	Pn013 (No. 1 Torque Limit)
	ON	Pn522 (No. 2 Torque Limit)	Pn522 (No. 2 Torque Limit)
6	OFF	Pn013 (No. 1 Torque Limit)	Pn522 (No. 2 Torque Limit)
	ON	Pn525 (Forward External Torque Limit)	Pn526 (Reverse External Torque Limit)

Torque Command Sign Input (TSIGN)

No allocation: Torque command sign input (TSIGN)
There is no allocation at default setting. Also, Torque Command Direction Selection (Pn318) is set to disable (set value: 0). You can change the logics and allocations for input terminals (CN1 to 8, 9 and 26 to 33) according to the settings of Input Signal Selection 1 to 10 (Pn400 to 409).

Function

You can use this input to designate the rotation direction relative to the torque command.
If Torque Command Direction Selection (Pn301) is enable (set value: 1), the polarity of torque command input is disabled.

Pn318 Set value	Pn320 Set value	TSIGN	Torque command input (TREF)	Motor rotation direction
0	0	Operation Disabled	+Voltage (0 to +10 V)	Forward operation
			–Voltage (–10 to 0 V)	Reverse operation
	1		+Voltage (0 to +10 V)	Reverse operation
			–Voltage (–10 to 0 V)	Forward operation
1	Setting Disabled	OFF	+Voltage (0 to +10 V)	Forward operation
			– Voltage (–10 to 0 V)	
		ON	+Voltage (0 to +10 V)	Reverse operation
			– Voltage (–10 to 0 V)	

Emergency Stop Input (EMG-STP)

No allocation: Emergency stop input (EMG-STP)
There is no allocation at default setting. You can change the logics and allocations for input terminals (CN1 to 8, 9 and 26 to 33) according to the settings of Input Signal Selection 1 to 10 (Pn400 to 409).

Function

This is an external alarm stop input.
Upon input of an emergency stop, the system stops according to the set value of Stop Selection for Alarm Detection (Pn510).

Inertia Ratio Switching Input (JSEL)

No allocation: Inertia ratio switching input (JSEL)
This is the allocation at default setting. You can change the logics and allocations for input terminals (CN1 to 8, 9 and 26 to 33) according to the settings of Input Signal Selection 1 to 10 (Pn400 to 409).

Function

You can switch the inertia ratio between Inertia Ratio 1 (Pn004) and Inertia Ratio 2 (Pn613). When this signal is OFF, Inertia Ratio 1 (Pn004) becomes valid. If ON, Inertia Ratio 2 (Pn613) becomes valid.

Control Output Circuits

Position Feedback Output

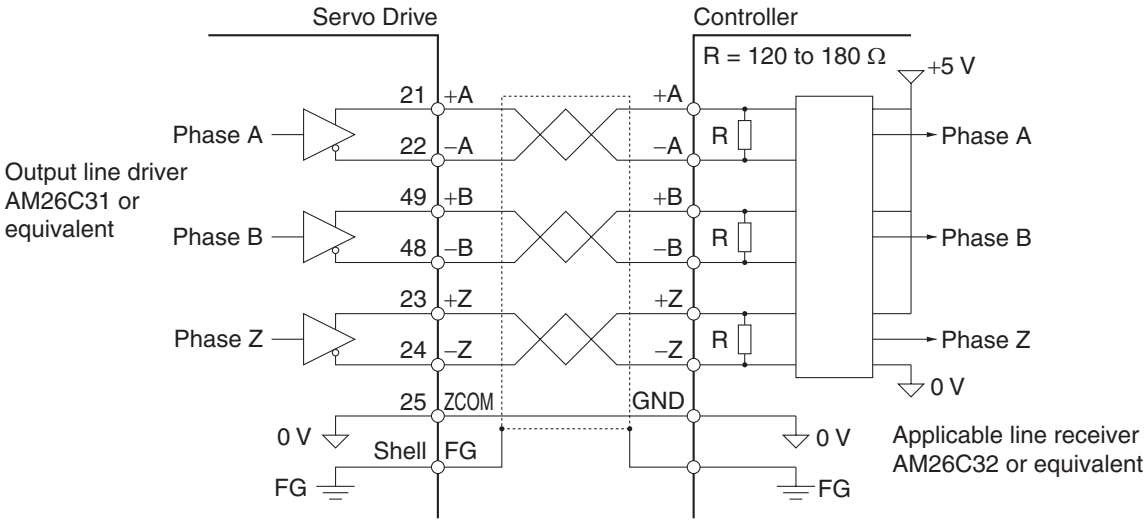

Phase-Z Output (Open Collector Output)

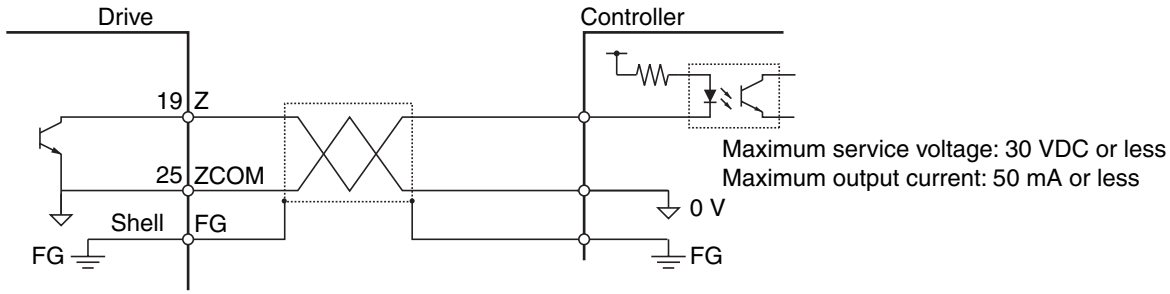

Sequence Output

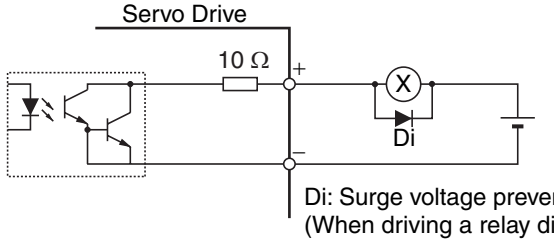

External power supply 12 to 24 VDC
Maximum service voltage: 30 VDC or less
Maximum output current: 50mA max.

Di: Surge voltage prevention diode
(When driving a relay directly with an output signal, always insert a diode as shown in the above figure.)

Control Output Details

Control Output Sequence

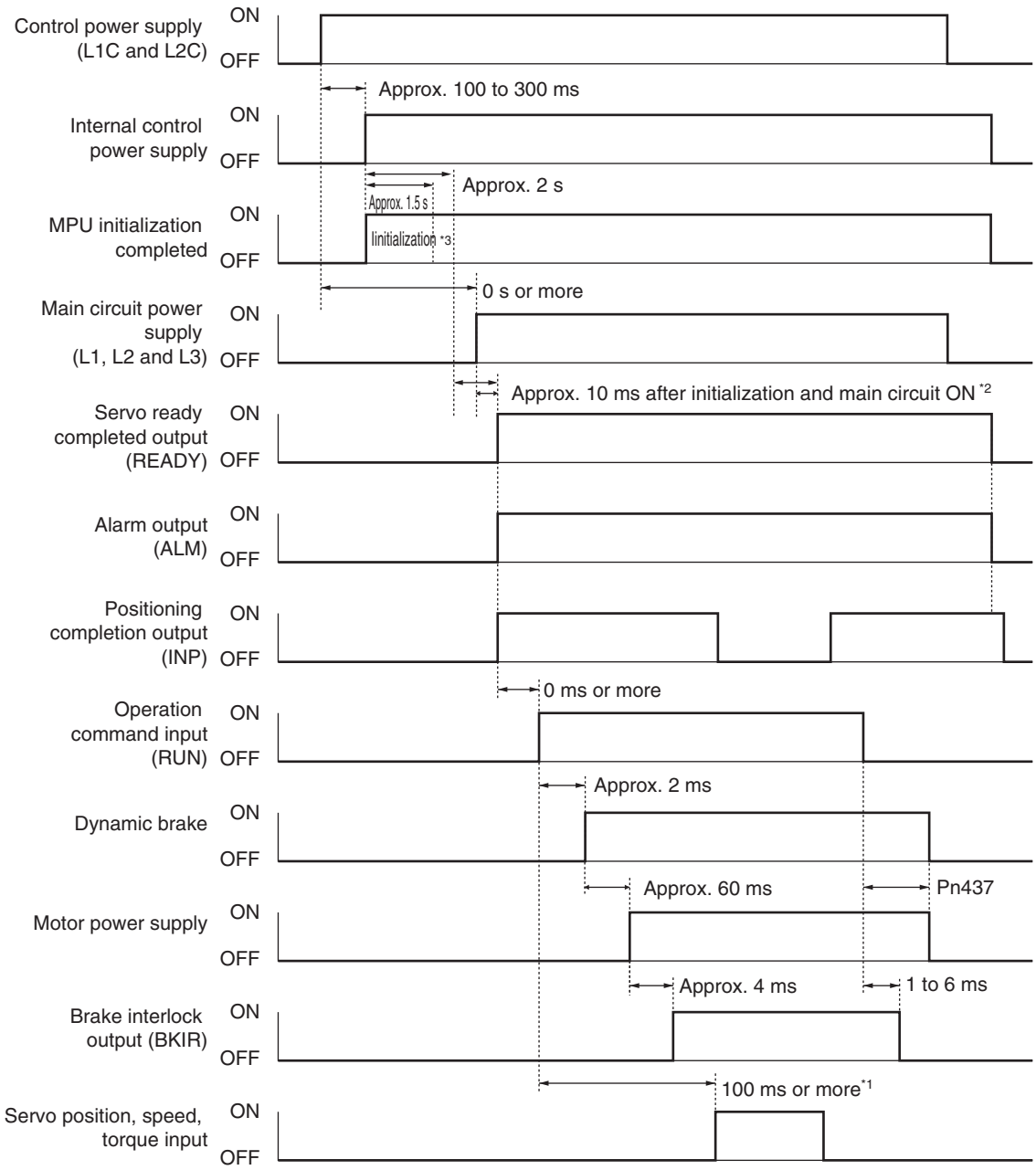

*1. In this section, the hardware inputs the servo ON signal, but the signal is not accepted.

*2. The servo ready completed output turns ON the moment the conditions of MPU initialization completed and main circuit power supply establishment are both satisfied.

*3. Once the internal control power is established, the protective function starts working about 1.5 s after the MPU starts initializing itself. Make sure all I/O signals which connect to the amplifier (especially forward/reverse direction, drive prohibition input and external encoder input) are established before operation of the protective function starts. Also, you can increase this time with Pn618 "Power Supply ON Initialization Time."

Encoder Outputs (Phases A, B and Z)

Pin 21: +A, 22: -A, 48: -B, 49: +B, 23: +Z, 24: -Z

Function

- It outputs the phase A, phase B, and phase Z encoder signals for the Servomotor.
- The encoder outputs conform to the RS-422 communication method.
- You can use External Feedback Pulse Dividing Numerator Setting (Pn324) and External Feedback Pulse Dividing Denominator Setting (Pn325) to set the dividing ratio.
- The logical relation of phase B to the phase A pulse and the output source are set in the External Feedback Pulse Direction Switching (Pn326).
- The ground for the output circuit line driver is connected to the signal ground (SENGND). It is not isolated.
- The maximum output frequency is 4 Mpps (after quadruple multiplier).
- The output frequency = the motor encoder resolution × (Pn324/Pn325) × 4 × motor rotation speed (r/min)/60
- The output phases are as shown below. (They are the same for both incremental and absolute encoders.)

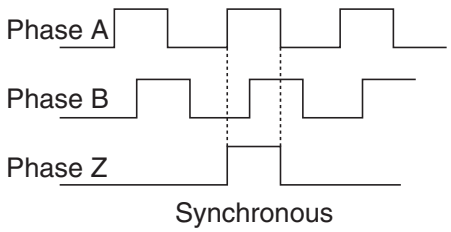

Synchronous

- If the motor encoder resolution × Pn324/Pn325 is a multiple of 4, phases Z and A are synchronized.

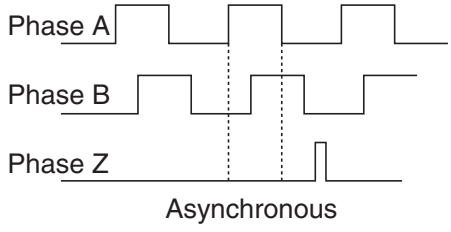

Asynchronous

- In cases except for the one on the left, phases A and Z are not synchronized.

Brake Interlock Output (BKIR)

Pin 11: Brake interlock output (BKIR)
Pin 10: Brake interlock output common (BKIRCOM)
This is the allocation at default setting. You can change the allocations of output terminals (CN1 to 10, 11, 34, 35, 38 and 39) according to the settings of Output Signal Selections 1 to 4 (Pn410 to 413).

Function

This outputs an external brake timing signal according to the settings of the Brake Timing when Stopped (Pn437) and Brake Timing during Operation (Pn438).

Servo Ready Completed Output (READY)

Pin 35: Servo ready completed output (READY)
Pin 34: Servo ready completed output common (READYCOM)
This is the allocation at default setting. You can change the allocations of output terminals (CN1 to 10, 11, 34, 35, 38 and 39) according to the settings of Output Signal Selections 1 to 4 (Pn410 to 413).

Function

This output signal indicates the Drive is ready to be energized.
It is turned ON when the control and main power supply is established and not in alarm status.

Alarm Output (/ALM)

Pin 37: Alarm Output (/ALM)
Pin 36: Alarm output common (ALMCOM)
The alarm output terminal is fixed to pin 36 or 37.

Function

The output is turned OFF when the drive detects an error.
This output is OFF when the power supply is turned ON, but turns ON when the drive's initial processing has been completed.

Positioning Completion Output 1 (INP1) and Positioning Completion Output 2 (INP2)

Pin 39: Positioning completion output 1 (INP1)
Pin 38: Positioning completion output common (INP1COM)
No allocation: Positioning completion output 2 (INP2)
No allocation: Positioning completion output 2 common (INP2COM)
This is the allocation at default setting. You can change the allocations of output terminals (CN1 to 10, 11, 34, 35, 38 and 39) according to the settings of Output Signal Selections 1 to 4 (Pn410 to 413).

Function

The INP1 turns ON when the error counter accumulated pulse is less than or equal to the Positioning Completion Range 1 (Pn431) set value.
The INP2 turns ON when the error counter accumulated pulse is less than or equal to the Positioning Completion Range 2 (Pn442) set value.
The output turns ON according to Positioning Completion Condition Selection (Pn432).

Motor Rotation Speed Detection Output (TGON)

Pin 39: Motor rotation speed detection output (TGON)
Pin 38: Motor rotation speed detection output common (TGONCOM)
This is the allocation at default setting. You can change the allocations of output terminals (CN1 to 10, 11, 34, 35, 38 and 39) according to the settings of Output Signal Selections 1 to 4 (Pn410 to 413).

Function

It turns ON when the speed of the Servomotor exceeds the set value of the Rotation Speed for Motor Rotation Detection (Pn436).

Torque Limiting Signal (TLIMT)

No allocation: Torque limiting signal (TLIMT)
No allocation: Torque limiting signal common (TLIMTCOM)
This is the allocation at default setting. You can change the allocations of output terminals (CN1 to 10, 11, 34, 35, 38 and 39) according to the settings of Output Signal Selections 1 to 4 (Pn410 to 413).

Function

This output turns ON while the torque is limited.

Zero Speed Detection Signal (ZSP)

No allocation: Zero speed detection signal (ZSP)
No allocation: Zero speed detection signal common (ZSPCOM)
This is the allocation at default setting. You can change the allocations of output terminals (CN1 to 10, 11, 34, 35, 38 and 39) according to the settings of Output Signal Selections 1 to 4 (Pn410 to 413).

Function

This output turns ON when the motor rotation speed is equal to Zero Speed Detection (Pn434) or less.

Speed Conformity Output Signal (VCMP)

No allocation: Speed conformity output signal (VCMP)
No allocation: Speed conformity output signal common (VCMPCOM)
This is the allocation at default setting. You can change the allocations of output terminals (CN1 to 10, 11, 34, 35, 38 and 39) according to the settings of Output Signal Selections 1 to 4 (Pn410 to 413).

Function

This output turns ON when the command speed corresponds to the motor rotation speed.
This output turns ON when the difference between the command speed and motor speed is equal to the Speed Conformity Detection Width (Pn435) or less.

Warning Output 1 (WARN1) and Warning Output 2 (WARN2)

No allocation: Warning output 1 (WARN1) and warning output 2 (WARN2)
No allocation: Warning output 1 common (WARN1COM) and warning output 2 common (WARN2COM)
This is the allocation at default setting. You can change the allocations of output terminals (CN1 to 10, 11, 34, 35, 38 and 39) according to the settings of Output Signal Selections 1 to 4 (Pn410 to 413).

Function

The output turns ON according to the setting conditions of Warning Output Selection 1 (Pn440) and Warning Output Selection 2 (Pn441).

Position Command Status Output (P-CMD)

No allocation: Position command status output (P-CMD)
No allocation: Position command status output common (P-CMDCOM)
This is the allocation at default setting. You can change the allocations of output terminals (CN1 to 10, 11, 34, 35, 38 and 39) according to the settings of Output Signal Selections 1 to 4 (Pn410 to 413).

Function

This output turns ON when a positioning command is input.

Speed Limiting Output (V-LIMIT)

No allocation: Speed limiting output (V-LIMIT)
No allocation: Speed limiting output common (V-LIMITCOM)
This is the allocation at default setting. You can change the allocations of output terminals (CN1 to 10, 11, 34, 35, 38 and 39) according to the settings of Output Signal Selections 1 to 4 (Pn410 to 413).

Function

This turns ON during torque control or speed limit status.

Alarm Clear Attribute Output (ALM-ATB)

No allocation: Alarm clear attribute output (ALM-ATB)
No allocation: Alarm clear attribute output common (ALM-ATB COM)
This is the allocation at default setting. You can change the allocations of output terminals (CN1 to 10, 11, 34, 35, 38 and 39) according to the settings of Output Signal Selections 1 to 4 (Pn410 to 413).

Function

This output turns ON when an alarm occurs or the alarm can be cleared.

Speed Command Status Output (V-CMD)

No allocation: Speed command status output (V-CMD)
No allocation: Speed command status output common (V-CMDCOM)
This is the allocation at default setting. You can change the allocations of output terminals (CN1 to 10, 11, 34, 35, 38 and 39) according to the settings of Output Signal Selections 1 to 4 (Pn410 to 413).

Function

This output turns ON during speed control or when a speed command is input.

Encoder Connector Specifications (CN2)

Pin number	Symbol	Name	Function and interface
1	E5V	Encoder power supply +5 V	Power supply output for the encoder
2	E0V	Encoder power supply GND	
3	BAT+	Battery +	Backup power supply output for the absolute encoder
4	BAT–	Battery –	
5	PS+	Encoder + phase S input	Encoder signal I/O (serial signal)
6	PS–	Encoder – phase S input	
Shell	FG	Frame ground	Frame ground

Connectors for CN2 (6 Pins)

Name	Model	Manufacturer
Drive connector	53460-0629	Molex Japan
Cable connector	55100-0670	

External Encoder Connector Specifications (CN4)

These are the specifications of the connector that connects to the external encoder.

Pin number	Symbol	Name	Function and interface
1	E5V	External encoder power supply output	Use at 5.2 V ± 5% and at or below 250 mA.
2	E0V		This is connected to the control circuit ground connected to connector CN1.
3	PS	External encoder signal I/O (Serial signal)	Performs serial signal input and output.
4	/PS		
5	EXA	External encoder signal input (Phase A, B, and Z signals)	Performs input and output of phase A, B, and Z signals.
6	/EXA		
7	EXB		
8	/EXB		
9	EXZ		
10	/EXZ		
Shell	FG	Frame ground	Frame ground

Connectors for CN4 (10 Pins)

Name	Model	Manufacturer
Connector	MUF-PK10K-X	JST Mfg. Co., Ltd.

Connection of External Encoder Input Signals and Processing of External Signals

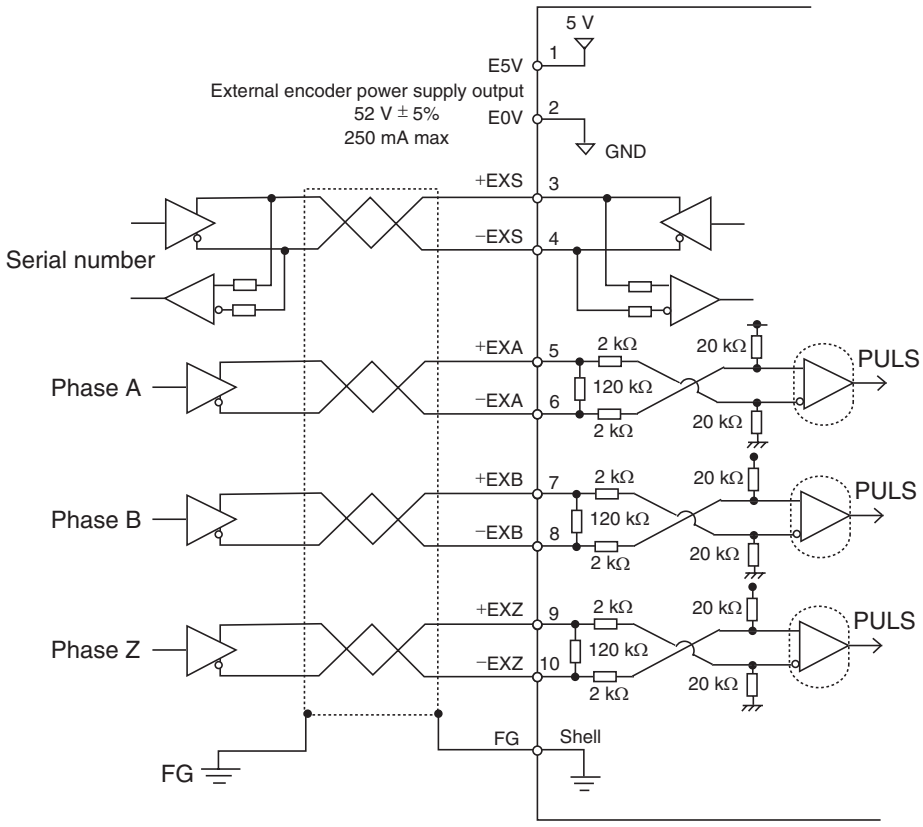

External Encoder Input Signals Table

External Encoder I/O (CN4)

Pin number	Symbol	Name	Function and interface
1	E5V	External encoder power supply output	External encoder power supply: 5.2 VDC ± 5%, 250 mA max. If the above capacity is exceeded, provide a separate power supply.
2	E0V		
3	+EXS	External encoder signal serial interface	This is an external encoder serial bi-directional signal.*(Conforming to EIA485) Maximum response frequency: 400 Mpps
4	−EXS		
5	+EXA	External encoder signal 90° phase difference input (Phases A, B and Z)	This is an external encoder 90° phase input signal.* Maximum response frequency: 4 Mpps (quadruple multiplier) 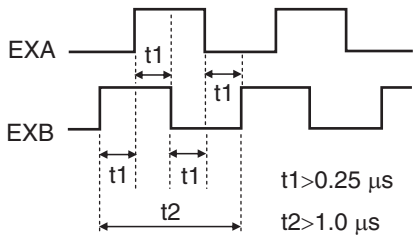
6	−EXA		
7	+EXB		
8	−EXB		
9	+EXZ		
10	−EXZ		

* Connect external encoder signals to the serial interface (+EXS/−EXS) or 90° phase difference inputs according to the encoder type.

Connector for CN4 (10 Pins)

Name	Model	Manufacturer
MUF connector	MUF-PK10K-X	JST Mfg. Co., Ltd.

Example of Connection with External Encoder

■ 90° Phase Difference Input Type (Pn323 = 0)

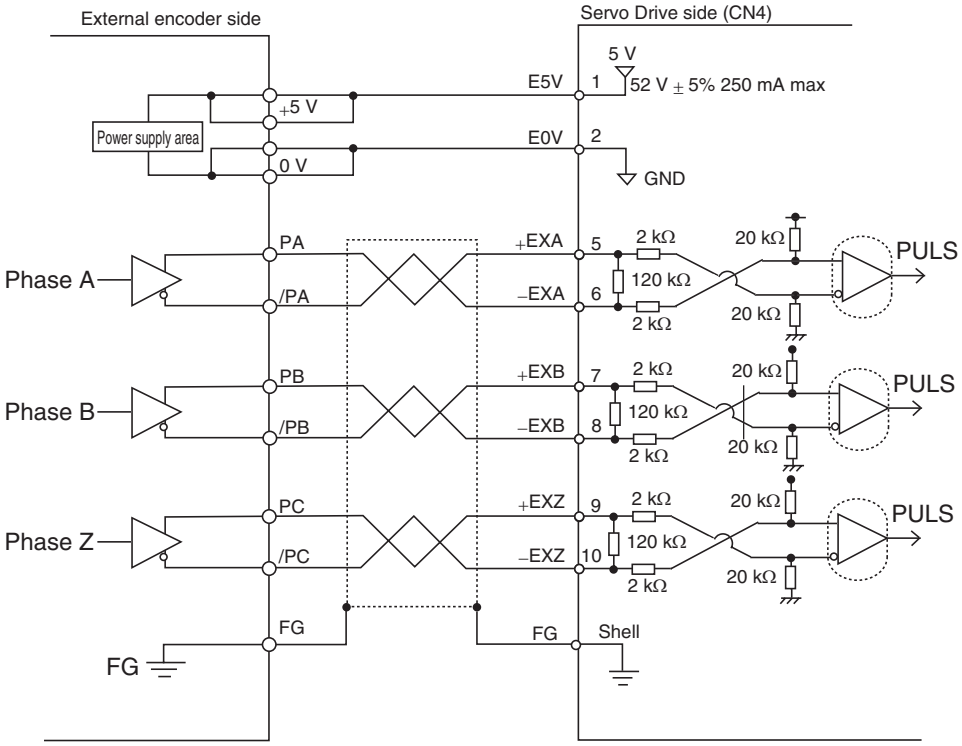

■ Serial Communications Type, Incremental Encoder Specifications (Pn323 = 1)

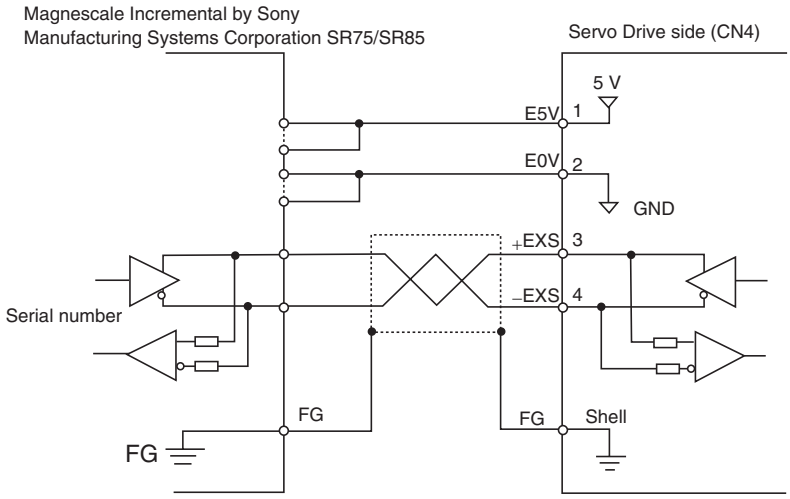

■ Serial Communications Type, Absolute Encoder Specifications (Pn323 = 2)

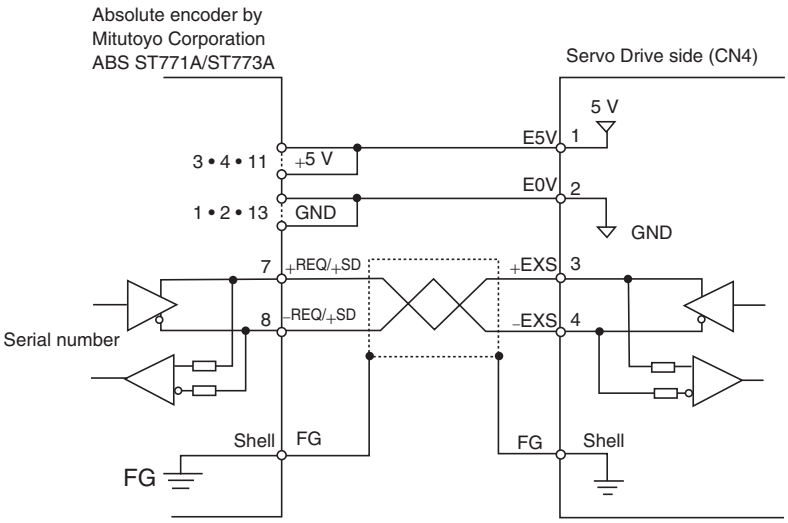

Monitor Connector Specifications (CN5)

Monitor Output Signal Table

Monitor output (CN5)

Pin Number	Symbol	Name	Function and interface
1	AM1	Analog monitor output 1	Outputs the analog signal for the monitor. Default setting: Motor rotation speed 1 V/(1,000 r/min) You can use Pn416 and Pn417 to change the item and unit. You can use Pn421 to change the output method.
2	AM2	Analog monitor output 2	Outputs the analog signal for the monitor. Default setting: Motor rotation speed 1 V/(1,000 r/min) You can use Pn418 and Pn419 to change the item and unit. You can use Pn421 to change the output method.
3	GND	Analog monitor ground	Ground for analog monitors 1, 2
4	–	Not used	Do not connect.
5	–	Not used	Do not connect.
6	–	Not used	Do not connect.

Connectors for CN5 (6 Pins)

Name	Model	Manufacturer
Connector housing	51004-0600	Molex Japan
Connector terminal	50011-8000	Molex Japan

Monitor Output Circuit

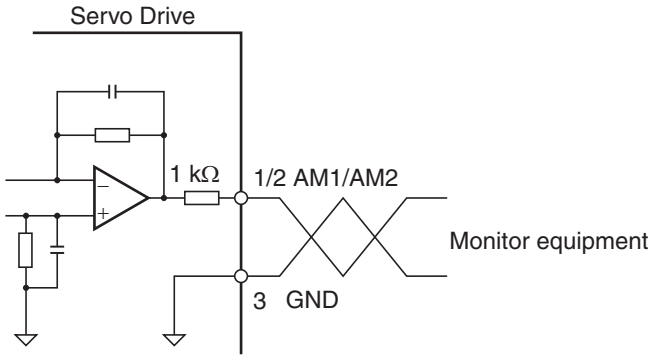

USB Connector Specifications (CN7)

Through the USB connection with computer, operations such as parameter setting and changing, monitoring of control status, checking alarm status and alarm history, and parameter saving and loading can be performed.

Pin number	Symbol	Name	Function and interface
1	VBUS	USB signal terminal	Use this function for computer communication.
2	D–		
3	D+		
4	–	Reserved for manufacturer use	Do not connect.
5	SENGND	Signal ground	Signal ground

Precautions for Correct Use

- Use a commercially available USB cable that is shielded, equipped with a ferrite core for noise immunity, and supports USB2.0. The Mini B type USB cable can be used.

Safety Connector Specifications (CN8)

Connection of Safety I/O Signals and Processing of External Signals

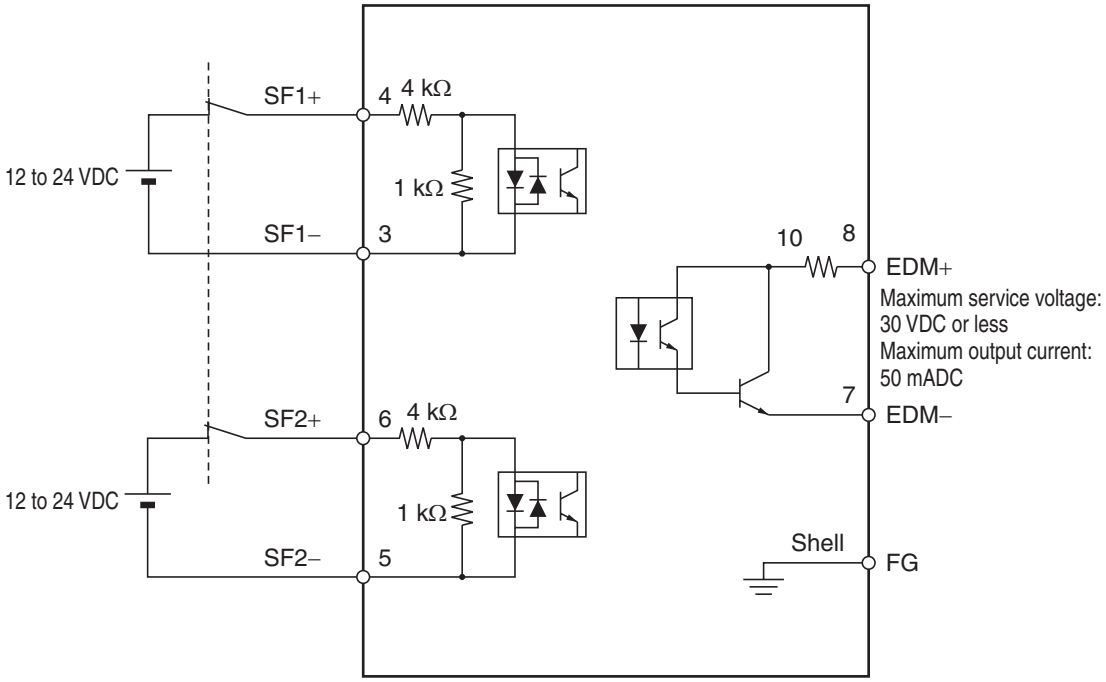

Safety I/O Signal Table

Safety I/O (CN8)

Pin Number	Symbol	Name	Function and interface
1	–	Reserved	Do not connect.
2	–		
3	SF1–	Safety input 1	Inputs 1 and 2 for operating the STO function, which are 2 independent circuits. This input turns OFF the power transistor drive signals in the Servo Drive to cut off the current output to the motor.
4	SF1+		
5	SF2–	Safety input 2	
6	SF2+		
7	EDM–	EDM output	A monitor signal is output to detect a safety function failure.
8	EDM+		
Shell	FG	Frame ground	Connected to the ground terminal inside the Servo Drive.

Connector for CN8 (8 Pins)

Name	Model	Manufacturer
Industrial Mini I/O Connector (D-SHAPE1)	2013595-1	Tyco Electronics AMP KK

Safety Input Circuit

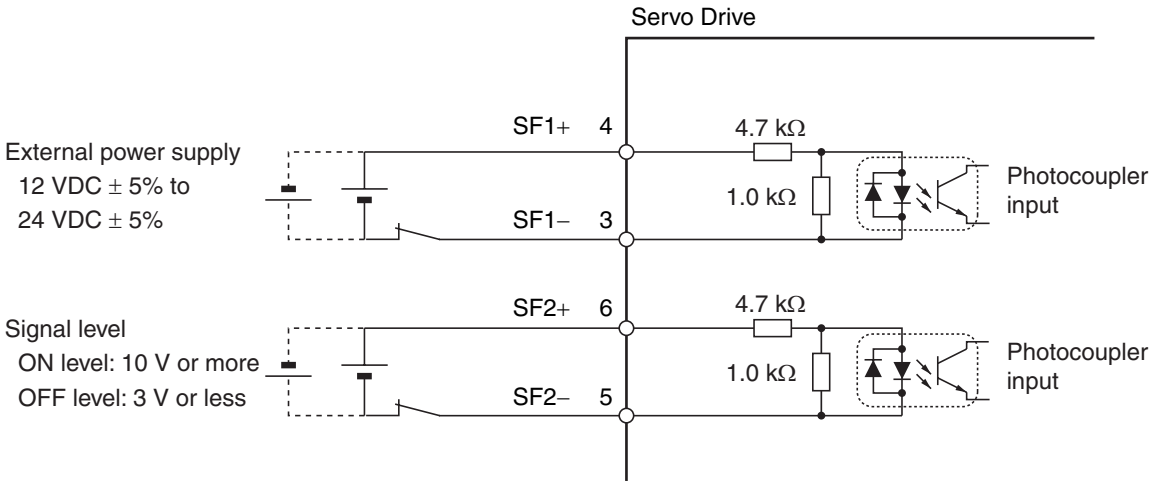

EDM Output Circuit

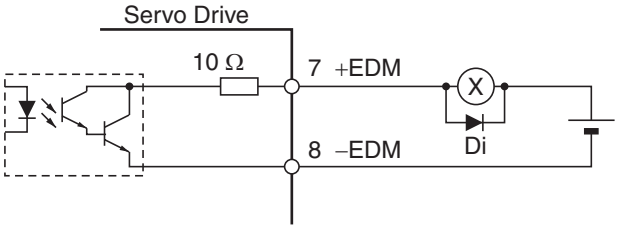

External power supply
12 to 24 VDC
Maximum service voltage: 30 VDC or less
Maximum output current: 50 mA max.

Di: Surge voltage prevention diode
(Use a high-speed diode.)

3-2 Overload Characteristics (Electronic Thermal Function)

An overload protection function (electronic thermal) is built into the Servo Drive to protect the Servo Drive and motor from overloading.
If an overload does occur, first eliminate the cause of the error and then wait at least 1 minute for the motor temperature to drop before turning ON the power again.
If the alarm reset is repeated at short intervals, the motor windings may burn out.

Overload Characteristics Graphs

The following graphs show the characteristics of the load ratio and electronic thermal function's operation time.

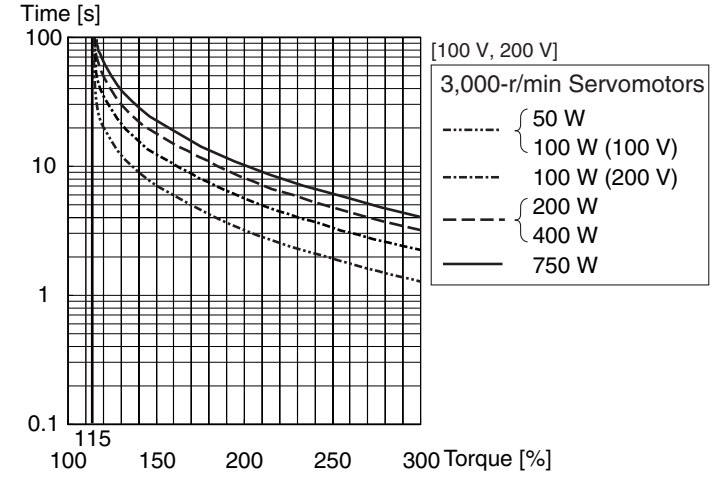

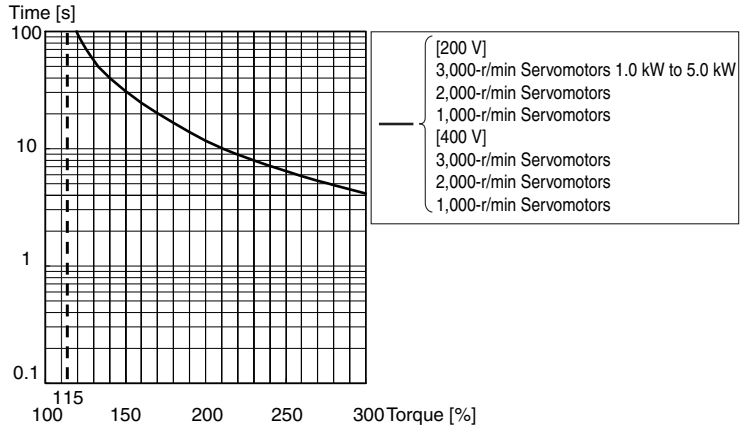

When the torque command = 0, and a constant torque command is continuously applied after 3 or more times the overload time constant has elapsed, the overload time t [s] is:
$t\ [s] = -\text{Overload time constant [s]} \times \log_e (1 - \text{Overload level [\%]} / \text{Torque command [\%]})^2$
(The overload time constant [s] depends on the motor. The standard overload level is 115%.)

3-3 Servomotor Specifications

The following OMNUC G5-Series AC Servomotors are available.
- 3,000-r/min Servomotors
- 2,000-r/min Servomotors
- 1,000-r/min Servomotors

There are various options available, such as models with brakes, or different shaft types. Select a Servomotor based on the mechanical system's load conditions and the installation environment.

General Specifications

Item			3,000-r/min Servomotors		1,000-r/min Servomotors 2,000-r/min Servomotors
			50 to 750 W	1 to 5 kW	900 W to 5 kW
Ambient operating temperature and operating humidity			0 to +40°C, 20% to 85% (with no condensation)		
Storage ambient temperature and humidity			–20 to +65°C, 20% to 85% (with no condensation) Guaranteed maximum temperature of 80°C (72 hours at normal temperature)		
Operating and storage atmosphere			No corrosive gases		
Vibration resistance *1			Acceleration of 49 m/s^2 24.5 m/s^2 max. in X, Y, and Z directions when the motor is stopped		
Impact resistance			Acceleration of 98 m/s^2 max. 3 times each in X, Y, and Z directions		
Insulation resistance			Between power terminal and FG terminal: 20 MΩ min. (at 500 VDC)		
Dielectric strength			1,500 VAC between power terminal and FG terminal for 1 min (voltage 100 V, 200 V) 1,800 VAC between power terminal and FG terminal for 1 min (voltage 400 V) 1,000 VAC between brake terminal and FG terminal for 1 min		
Protective structure			IP67 (except for through-shaft parts and motor and encoder connector pins)		
International standard	EC Directive	EMC Directive	EN 55011 class A group 1		
			EN61000-6-2, IEC61800-3 and IEC61326-3-1		
		Low Voltage Directive	EN60034-1/-5		
	UL standards		UL1004-1		
	CSA standards		CSA22.2 No. 100		

*1. The amplitude may be amplified by machine resonance. Do not exceed 80% of the specified value for extended periods of time.

Note 1. Do not use the cable when it is laying in oil or water.

Note 2. Do not expose the cable outlet or connections to stress due to bending or the weight of the cable itself.

Characteristics

3,000-r/min Servomotors

Item		Unit	100 VAC			
Model (R88M-)			K05030H	K10030L	K20030L	K40030L
			K05030T	K10030S	K20030S	K40030S
Rated output *1		W	50	100	200	400
Rated torque *1		N • m	0.16	0.32	0.64	1.3
Rated rotation speed		r/min	3,000			
Momentary maximum rotation speed		r/min	6,000			
Momentary maximum torque *1		N • m	0.48	0.95	1.91	3.8
Rated current *1		A (rms)	1.1	1.6	2.5	4.6
Momentary maximum current *1		A (rms)	4.7	6.9	10.6	19.5
Rotor inertia	Without brake	kg • m^2	0.025×10^{-4}	0.051×10^{-4}	0.14×10^{-4}	0.26×10^{-4}
	With brake	kg • m^2	0.027×10^{-4}	0.054×10^{-4}	0.16×10^{-4}	0.28×10^{-4}
Applicable load inertia		–	30 times the rotor inertia max. *2			
Torque constant *1		N • m/A	0.11±10%	0.14±10%	0.20±10%	0.21±10%
Power rate *1	Without brake	kW/s	10.1	19.8	28.9	62.3
	With brake	kW/s	9.4	18.7	25.3	57.8
Mechanical time constant	Without brake	ms	1.43	1.03	0.61	0.48
	With brake	ms	1.54	1.09	0.70	0.52
Electrical time constant		ms	0.82	0.91	3.0	3.4
Allowable radial load *3		N	68	68	245	245
Allowable thrust load *3		N	58	58	98	98
Weight	Without brake	kg	Approx. 0.31	Approx. 0.45	Approx. 0.78	Approx. 1.2
	With brake	kg	Approx. 0.51	Approx. 0.65	Approx. 1.2	Approx. 1.6
Radiator plate dimensions (material)			100 × 80 × t10 (Al)		130 × 120 × t12 (Al)	
Applicable Servo Drives (R88D-)			KTA5L	KT01L	KT02L	KT04L
Brake specifications	Brake inertia	kg • m^2	2×10^{-7}	2×10^{-7}	1.8×10^{-6}	1.8×10^{-6}
	Excitation voltage *4	V	24 VDC ± 10%			
	Power consumption (at 20°C)	W	7	7	9	9
	Current consumption (at 20°C)	A	0.3	0.3	0.36	0.36
	Static friction torque	N • m	0.29 min.	0.29 min.	1.27 min.	1.27 min.
	Attraction time *5	ms	35 max.	35 max.	50 max.	50 max.
	Release time *5	ms	20 max.	20 max.	15 max.	20 max.
	Backlash		1° (reference value)			
	Allowable work per braking	J	39.2	39.2	137	137
	Allowable total work	J	4.9×10^{3}	4.9×10^{3}	44.1×10^{3}	44.1×10^{3}

Item		Unit	Model (R88M-) 100 VAC K05030H / K05030T	K10030L / K10030S	K20030L / K20030S	K40030L / K40030S
Brake specifications	Allowable angular acceleration	rad/s^2	30,000 max. (Speed of 2,800 r/min or more must not be changed in less than 10 ms.)			
	Brake limit	–	10 million times min.			
	Rating	–	Continuous			
	Insulation class	–	Type B			

Item		Unit	Model (R88M-) 200 VAC K05030H / K05030T	K10030H / K10030T	K20030H / K20030T	K40030H / K40030T
Rated output *1		W	50	100	200	400
Rated torque *1		N • m	0.16	0.32	0.64	1.3
Rated rotation speed		r/min	3,000			
Momentary maximum rotation speed		r/min	6,000			
Momentary maximum torque *1		N • m	0.48	0.95	1.91	3.8
Rated current *1		A (rms)	1.1	1.1	1.5	2.4
Momentary maximum current *1		A (rms)	4.7	4.7	6.5	10.2
Rotor inertia	Without brake	kg • m^2	0.025×10^{-4}	0.051×10^{-4}	0.14×10^{-4}	0.26×10^{-4}
	With brake	kg • m^2	0.027×10^{-4}	0.054×10^{-4}	0.16×10^{-4}	0.28×10^{-4}
Applicable load inertia		–	30 times the rotor inertia max.*2			
Torque constant *1		N • m/A	0.11±10%	0.21±10%	0.32±10%	0.40±10%
Power rate *1	Without brake	kW/s	10.1	19.8	28.9	62.3
	With brake	kW/s	9.4	18.7	25.3	57.8
Mechanical time constant	Without brake	ms	1.43	1.07	0.58	0.43
	With brake	ms	1.54	1.13	0.66	0.46
Electrical time constant		ms	0.82	0.90	3.2	3.4
Allowable radial load *3		N	68	68	245	245
Allowable thrust load *3		N	58	58	98	98
Weight	Without brake	kg	Approx. 0.31	Approx. 0.46	Approx. 0.79	Approx. 1.2
	With brake	kg	Approx. 0.51	Approx. 0.66	Approx. 1.2	Approx. 1.6
Radiator plate dimensions (material)			100 × 80 × t10 (Al)		130 × 120 × t12 (Al)	
Applicable Servo Drives (R88D-)			KT01H	KT01H	KT02H	KT04H

Item		Unit	Model (R88M-) 200 VAC			
			K05030H	K10030H	K20030H	K40030H
			K05030T	K10030T	K20030T	K40030T
Brake specifications	Brake inertia	kg • m^2	2×10^{-7}	2×10^{-7}	1.8×10^{-6}	1.8×10^{-6}
	Excitation voltage *4	V	24 VDC ± 10%			
	Power consumption (at 20°C)	W	7	7	9	9
	Current consumption (at 20°C)	A	0.3	0.3	0.36	0.36
	Static friction torque	N • m	0.29 min.	0.29 min.	1.27 min.	1.27 min.
	Attraction time *5	ms	35 max.	35 max.	50 max.	50 max.
	Release time *5	ms	20 max.	20 max.	15 max.	15 max.
	Backlash		1° (reference value)			
	Allowable work per braking	J	39.2	39.2	137	137
	Allowable total work	J	4.9×10^3	4.9×10^3	44.1×10^3	44.1×10^3
	Allowable angular acceleration	rad/s^2	30,000 max. (Speed of 2,800 r/min or more must not be changed in less than 10 ms.)			
	Brake limit	–	10 million times min.			
	Rating	–	Continuous			
	Insulation class	–	Type B			

Item		Unit	200 VAC		
Model (R88M-)			K75030H	K1K030H	K1K530H
			K75030T	K1K030T	K1K530T
Rated output *1		W	750	1000	1500
Rated torque *1		N • m	2.4	3.18	4.77
Rated rotation speed		r/min	3,000		
Momentary maximum rotation speed		r/min	6,000	5,000	
Momentary maximum torque *1		N • m	7.1	9.55	14.3
Rated current *1		A (rms)	4.1	6.6	8.2
Momentary maximum current *1		A (rms)		28	35
Rotor inertia	Without brake	kg • m^2	0.87×10^{-4}	2.03×10^{-4}	2.84×10^{-4}
	With brake	kg • m^2	0.97×10^{-4}	2.35×10^{-4}	3.17×10^{-4}
Applicable load inertia		–	20 times the rotor inertia max.	15 times the rotor inertia max. *2	
Torque constant *1		N • m/A	0.45±10%	0.37	0.45
Power rate *1	Without brake	kW/s	65.4	49.8	80.1
	With brake	kW/s	58.7	43.0	71.8
Mechanical time constant	Without brake	ms	0.37	0.61	0.49
	With brake	ms	0.42	0.71	0.55
Electrical time constant		ms	5.3	5.8	6.3
Allowable radial load *3		N	490	490	490
Allowable thrust load *3		N	196	196	196
Weight	Without brake	kg	Approx. 2.3	Approx. 3.5	Approx. 4.4
	With brake	kg	Approx. 3.1	Approx. 4.5	Approx. 5.4
Radiator plate dimensions (material)			170 × 160 × t12 (Al)	320 × 300 × t20 (Al)	
Applicable Servo Drives (R88D-)			KT08H	KT15H	KT15H

Item		Unit	Model (R88M-) 200 VAC K75030H / K75030T	K1K030H / K1K030T	K1K530H / K1K530T
Brake specifications	Brake inertia	kg • m^2	0.33×10^{-4}	0.33×10^{-4}	0.33×10^{-4}
	Excitation voltage *4	V	24 VDC ± 10%		
	Power consumption (at 20°C)	W	17	19	19
	Current consumption (at 20°C)	A	0.70±10%	0.81±10%	0.81±10%
	Static friction torque	N • m	2.5 min.	7.8 min.	7.8 min.
	Attraction time *5	ms	50 max.	50 max.	50 max.
	Release time *5	ms	15 max. *6	15 max. *6	15 max. *6
	Backlash		±1° (reference value)		
	Allowable work per braking	J	392	392	392
	Allowable total work	J	4.9×10^5	4.9×10^5	4.9×10^5
	Allowable angular acceleration	rad/s^2	10,000		
	Brake limit	–	10 million times min.		
	Rating	–	Continuous		
	Insulation class	–	Type B	Type F	

Item		Unit	Model (R88M-) 400 VAC K75030F / K75030C	K1K030F / K1K030C	K1K530F / K1K530C	K2K030F / K2K030C
Rated output *1		W	750	1000	1500	2000
Rated torque *1		N • m	2.39	3.18	4.77	6.37
Rated rotation speed		r/min	3,000			
Momentary maximum rotation speed		r/min	5,000			
Momentary maximum torque *1		N • m	7.16	9.55	14.3	19.1
Rated current *1		A (rms)	2.4	3.3	4.2	5.7
Momentary maximum current *1		A (rms)	10	14	18	24
Rotor inertia	Without brake	kg • m^2	1.61×10^{-4}	2.03×10^{-4}	2.84×10^{-4}	3.68×10^{-4}
	With brake	kg • m^2	1.93×10^{-4}	2.35×10^{-4}	3.17×10^{-4}	4.01×10^{-4}
Applicable load inertia		–	30 times the rotor inertia max. *2			
Torque constant *1		N • m/A	0.78	0.75	0.89	0.87
Power rate *1	Without brake	kW/s	35.5	49.8	80.1	110
	With brake	kW/s	29.6	43	71.8	101
Mechanical time constant	Without brake	ms	0.67	0.60	0.49	0.45
	With brake	ms	0.8	0.70	0.55	0.49
Electrical time constant		ms	5.9	5.8	6.5	6.6

Item		Unit	Model (R88M-)			
			400 VAC			
			K75030F	K1K030F	K1K530F	K2K030F
			K75030C	K1K030C	K1K530C	K2K030C
Allowable radial load *3		N	490	490	490	490
Allowable thrust load *3		N	196	196	196	196
Weight	Without brake	kg	Approx. 3.1	Approx. 3.5	Approx. 4.4	Approx. 5.3
	With brake	kg	Approx. 4.1	Approx. 4.5	Approx. 5.4	Approx. 6.3
Radiator plate dimensions (material)			320 × 300 × t20 (Al)			
Applicable Servo Drives (R88D-)			KT10F	KT15F	KT15F	KT20F
Brake specifications	Brake inertia	kg • m^2	0.33×10^{-4}	0.33×10^{-4}	0.33×10^{-4}	0.33×10^{-4}
	Excitation voltage *4	V	24 VDC ± 10%			
	Power consumption (at 20°C)	W	17	19	19	19
	Current consumption (at 20°C)	A	0.70±10%	0.81±10%	0.81±10%	0.81±10%
	Static friction torque	N • m	2.5 min.	7.8 min.	7.8 min.	7.8 min.
	Attraction time *5	ms	50 max.	50 max.	50 max.	50 max.
	Release time *5	ms	15 max. *6	15 max. *6	15 max. *6	15 max. *6
	Backlash		1° (reference value)			
	Allowable work per braking	J	392	392	392	392
	Allowable total work	J	4.9×10^5	4.9×10^5	4.9×10^5	4.9×10^5
	Allowable angular acceleration	rad/s^2	10,000			
	Brake limit	–	10 million times min.			
	Rating	–	Continuous			
	Insulation class	–	Type F			

Item		Unit	400 VAC K3K030F / K3K030C	400 VAC K4K030F / K4K030C	400 VAC K5K030F / K5K030C
Rated output *1		W	3000	4000	5000
Rated torque *1		N • m	9.55	12.7	15.9
Rated rotation speed		r/min	3,000		
Momentary maximum rotation speed		r/min	5,000	4,500	
Momentary maximum torque *1		N • m	28.6	38.2	47.7
Rated current *1		A (rms)	9.2	9.9	12.0
Momentary maximum current *1		A (rms)	39	42	51
Rotor inertia	Without brake	kg • m^2	6.50×10^{-4}	12.9×10^{-4}	17.4×10^{-4}
	With brake	kg • m^2	7.85×10^{-4}	14.2×10^{-4}	18.6×10^{-4}
Applicable load inertia		–	30 times the rotor inertia max. *2		
Torque constant *1		N • m/A	0.81	0.98	0.98
Power rate *1	Without brake	kW/s	140	126	146
	With brake	kW/s	116	114	136
Mechanical time constant	Without brake	ms	0.40	0.51	0.50
	With brake	ms	0.49	0.56	0.54
Electrical time constant		ms	12	13	13
Allowable radial load *3		N	490	784	784
Allowable thrust load *3		N	196	343	343
Weight	Without brake	kg	Approx. 8.3	Approx. 11.0	Approx. 14.0
	With brake	kg	Approx. 9.4	Approx. 12.6	Approx. 16.0
Radiator plate dimensions (material)			380 × 350 × t30 (Al)		
Applicable Servo Drives (R88D-)			KT30F	KT50F	KT50F

Item		Unit	Model (R88M-) 400 VAC K3K030F / K3K030C	K4K030F / K4K030C	K5K030F / K5K030C
Brake specifications	Brake inertia	kg • m^2	0.33×10^{-4}	0.33×10^{-4}	1.35×10^{-4}
	Excitation voltage *4	V	24 VDC ± 10%		
	Power consumption (at 20°C)	W	19	22	22
	Current consumption (at 20°C)	A	0.81±10%	0.90±10%	0.90±10%
	Static friction torque	N • m	11.8 min.	16.1 min.	16.1 min.
	Attraction time *5	ms	80 max.	110 max.	110 max.
	Release time *5	ms	15 max. *6	50 max. *7	50 max. *7
	Backlash		1° (reference value)		
	Allowable work per braking	J	392	1470	1470
	Allowable total work	J	4.9×10^5	2.2×10^6	2.2×10^6
	Allowable angular acceleration	rad/s^2	10,000		
	Brake limit	–	10 million times min.		
	Rating	–	Continuous		
	Insulation class	–	Type F		

*1. These are the values when the Servomotor is combined with a drive at normal temperature (20°C, 65%). The momentary maximum torque indicates the standard value.

*2. Applicable load inertia.

- The operable load inertia ratio (load inertia/rotor inertia) depends on the mechanical configuration and its rigidity. For a machine with high rigidity, operation is possible even with high load inertia. Select an appropriate motor and confirm that operation is possible.
- If the dynamic brake is activated frequently with high load inertia, the Dynamic Brake Resistor may burn. Do not repeatedly turn the servo ON/OFF while the dynamic brake is enabled.

*3. The allowable radial and thrust loads are the values determined for a limit of 20,000 hours at normal operating temperatures.
The allowable radial loads are applied as shown in the following diagram.

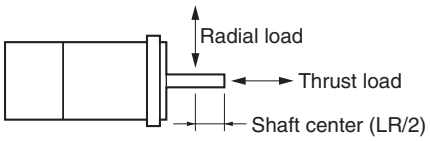

*4. This is a non-excitation brake. (It is released when excitation voltage is applied.)

*5. The operation time is the value (reference value) measured with a surge suppressor (CR50500 by Okaya Electric Industries Co., Ltd.).

*6. Direct current switching with a varistor (Z15D151 by Ishizuka Electronics Co.).

*7. Direct current switching with a varistor (TNR9G820K by Nippon Chemi-Con Corporation).

Torque-Rotation Speed Characteristics for 3,000-r/min Servomotors

- 3,000-r/min Servomotor (100 VAC)
  The following graphs show the characteristics with a 3-m standard cable and a 100-VAC input.

• R88M-K05030H/T (50 W)

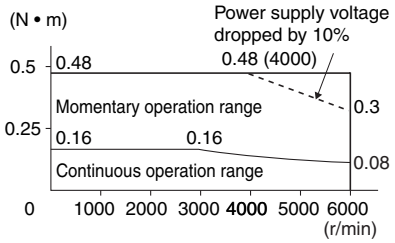

• R88M-K10030L/S (100 W)

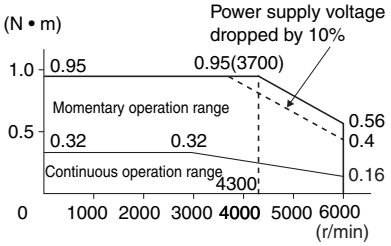

• R88M-K20030L/S (200 W)

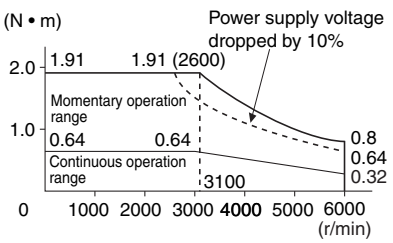

• R88M-K40030L/S (400 W)

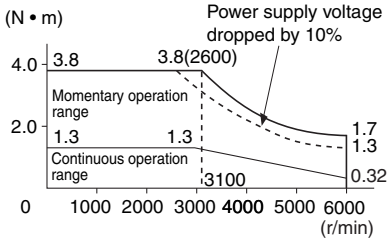

♦ 3,000-r/min Servomotor (200 VAC)
The following graphs show the characteristics with a 3-m standard cable and a 200-VAC input.

• R88M-K05030H/T (50 W)

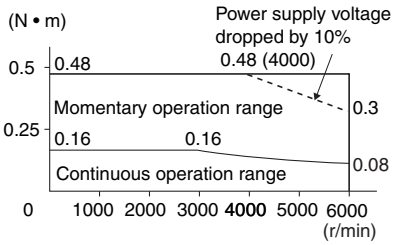

• R88M-K10030H/T (100 W)

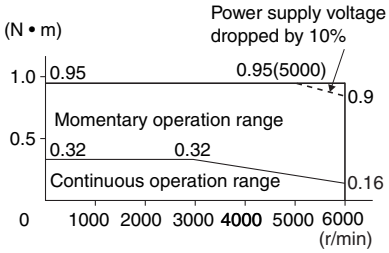

• R88M-K20030H/T (200 W)

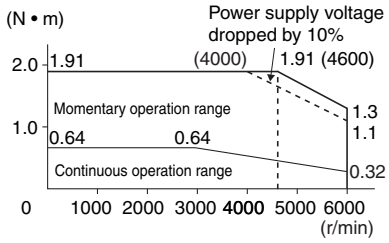

• R88M-K40030H/T (400 W)

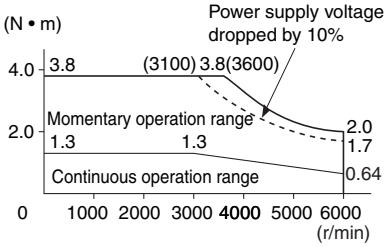

• R88M-K75030H/T (750 W)

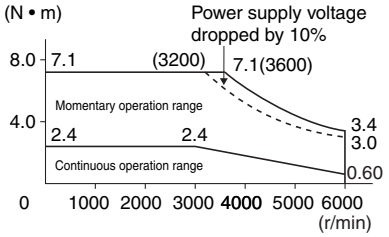

• R88M-K1K030H/T (1 kW)

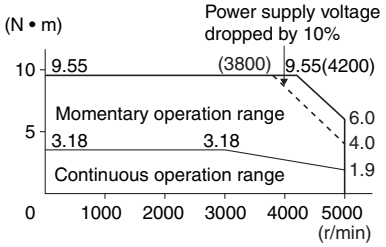

• R88M-K1K530H/T (1.5 kW)

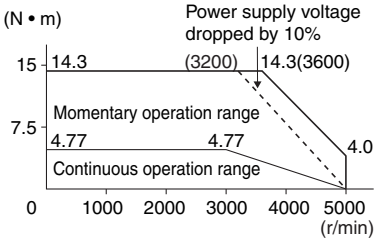

• R88M-K2K030H/T (2 kW)

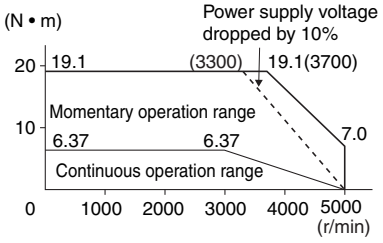

• R88M-K3K030H/T (3 kW)

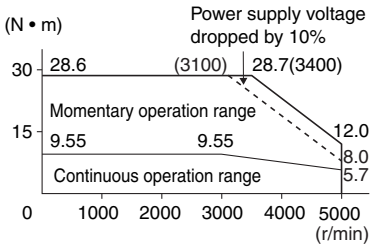

• R88M-K4K030H/T (4 kW)

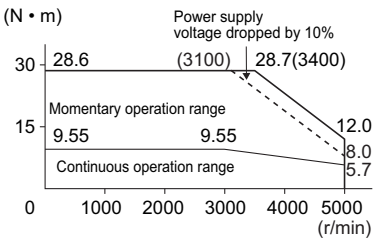

• R88M-K5K030H/T (5 kW)

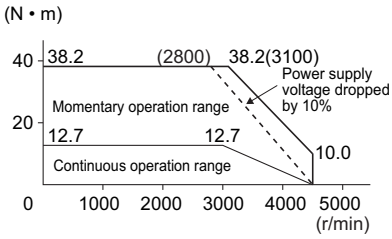

♦ 3,000-r/min Servomotor (400 VAC)
The following graphs show the characteristics with a 3-m standard cable and a 400-VAC input.

• R88M-K75030F/C (750 W)

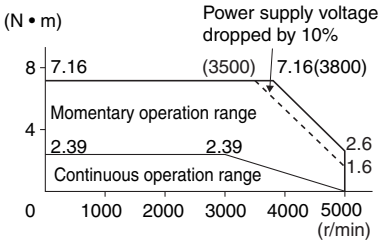

• R88M-K1K030F/C (1 kW)

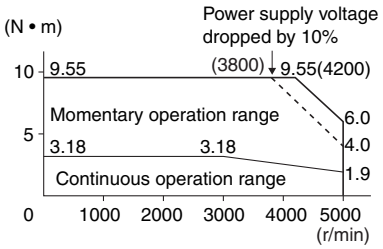

• R88M-K1K530F/C (1.5 kW)

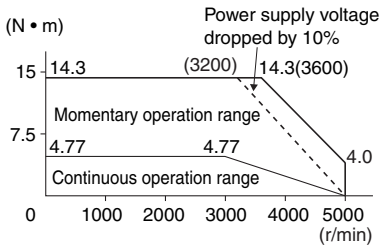

• R88M-K2K030F/C (2 kW)

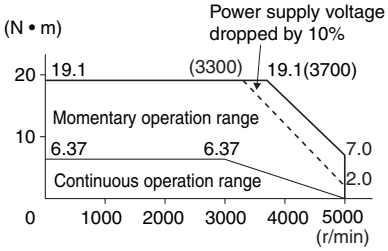

• R88M-K3K030F/C (3 kW)

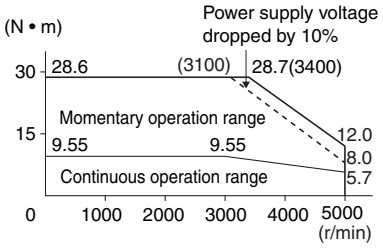

• R88M-K4K030F/C (4 kW)

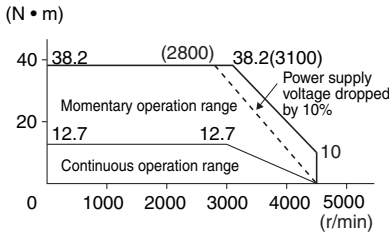

• R88M-K5K030F/C (5 kW)

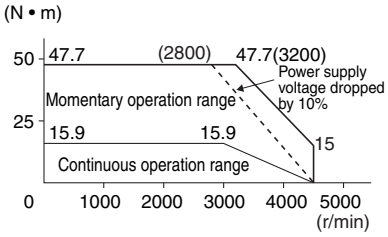

Use the following Servomotors in the ranges shown in the graphs below. Using outside of these ranges may cause the motor to generate heat, which could result in encoder malfunction.

• R88M-K05030L/S/H/T
(50 W: With oil seal)

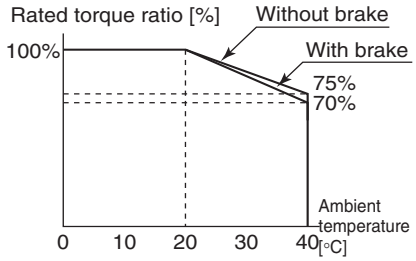

• R88M-K10030L/S/H/T
(100 W: With oil seal)

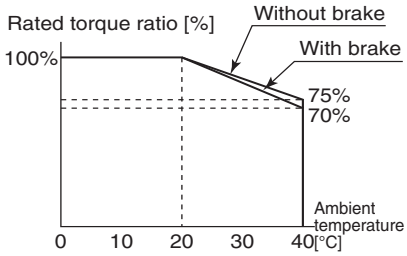

• R88M-K20030L/SH/T
(200 W: With oil seal)

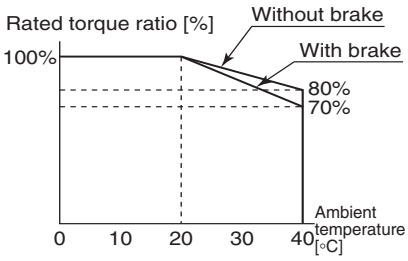

• R88M-K40030L/S/H/T
(400 W: Without oil seal)

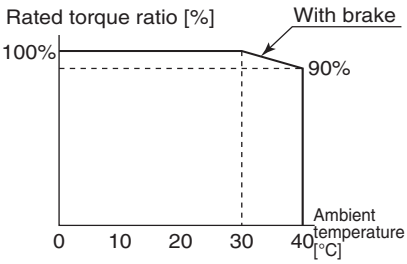

• R88M-K40030L/S/H/T
(400 W: With oil seal)

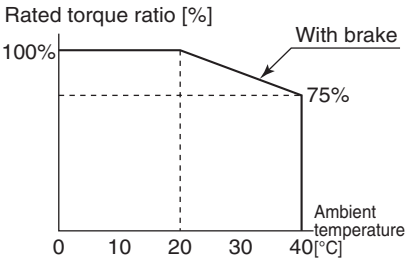

• R88M-K1K530H/T/F/C
(1.5 kW)

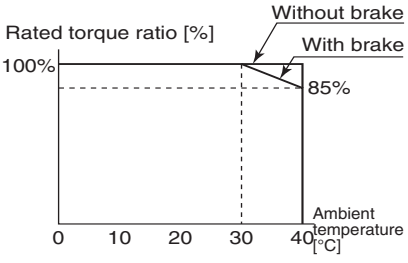

• R88M-K2K030H/T/F/C
(2 kW)

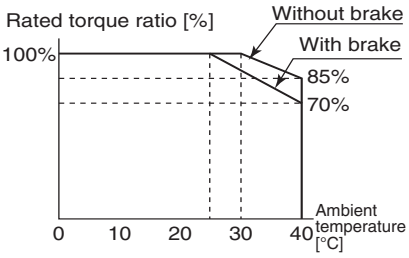

• R88M-K3K030H/T/F/C
(3 kW)

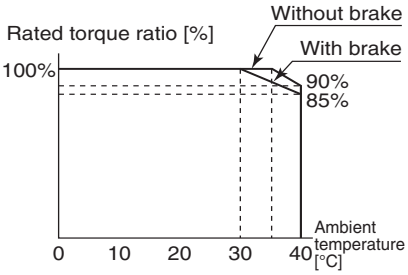

• R88M-K4K030H/T/F/C
(4 kW)

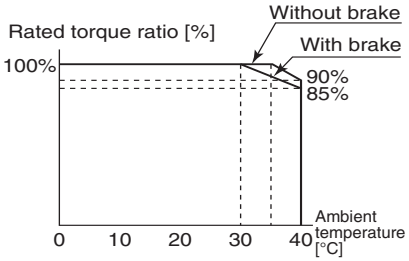

• R88M-K5K030H/T/F/C
(5 kW)

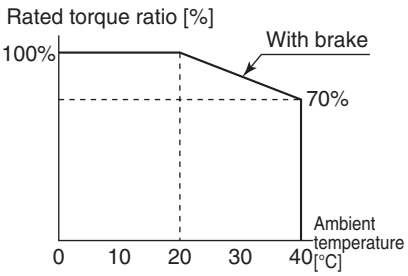

2,000-r/min Servomotors

Item		Unit	200 VAC		
Model (R88M-)			K1K020H	K1K520H	K2K020H
			K1K020T	K1K520T	K2K020T
Rated output *1		W	1,000	1,500	2,000
Rated torque *1		N • m	4.77	7.16	9.55
Rated rotation speed		r/min	2,000		
Momentary maximum rotation speed		r/min	3,000		
Momentary maximum torque *1		N • m	14.3	21.5	28.6
Rated current *1		A (rms)	5.7	9.4	11.5
Momentary maximum current *1		A (rms)	24	40	49
Rotor inertia	Without brake	kg • m^2	4.60×10^{-4}	6.70×10^{-4}	8.72×10^{-4}
	With brake	kg • m^2	5.90×10^{-4}	7.99×10^{-4}	10.0×10^{-4}
Applicable load inertia		–	10 times the rotor inertia max. *2		
Torque constant *1		N • m/A	0.63	0.58	0.64
Power rate *1	Without brake	kW/s	49.5	76.5	105
	With brake	kW/s	38.6	64.2	91.2
Mechanical time constant	Without brake	ms	0.80	0.66	0.66
	With brake	ms	1.02	0.80	0.76
Electrical time constant		ms	9.4	10	10
Allowable radial load *3		N	490	490	490
Allowable thrust load *3		N	196	196	196
Weight	Without brake	kg	Approx. 5.2	Approx. 6.7	Approx. 8.0
	With brake	kg	Approx. 6.7	Approx. 8.2	Approx. 9.5
Radiator plate dimensions (material)			275 × 260 × t15 (Al)		
Applicable Servo Drives (R88D-)			KT10H	KT15H	KT20H
Brake specifications	Brake inertia	kg • m^2	1.35×10^{-4}	1.35×10^{-4}	1.35×10^{-4}
	Excitation voltage *4	V	24 VDC ± 10%		
	Power consumption (at 20°C)	W	14	19	19
	Current consumption (at 20°C)	A	0.59±10%	0.79±10%	0.79±10%
	Static friction torque	N • m	4.9 min.	13.7 min.	13.7 min.
	Attraction time *5	ms	80 max.	100 max.	100 max.
	Release time *5	ms	70 max. *6	50 max. *6	50 max. *6
	Backlash		1 (reference value)		
	Allowable work per braking	J	588	1,176	1,176

Item		Unit	Model (R88M-) 200 VAC K1K020H / K1K020T	K1K520H / K1K520T	K2K020H / K2K020T
Brake specifications	Allowable total work	J	7.8×10^5	1.5×10^6	1.5×10^6
	Allowable angular acceleration	rad/s^2	10,000		
	Brake limit	–	10 million times min.		
	Rating	–	Continuous		
	Insulation class	–	Type F		

Item		Unit	Model (R88M-) 200 VAC K3K020H / K3K020T	K4K020H / K4K020T	K5K020H / K5K020T
Rated output *1		W	3,000	4,000	5,000
Rated torque *1		N • m	14.3	19.1	23.9
Rated rotation speed		r/min	2,000		
Momentary maximum rotation speed		r/min	3,000		
Momentary maximum torque *1		N • m	43.0	57.3	71.6
Rated current *1		A (rms)	17.4	21.0	25.9
Momentary maximum current *1		A (rms)	74	89	110
Rotor inertia	Without brake	kg • m^2	12.9×10^{-4}	37.6×10^{-4}	48.0×10^{-4}
	With brake	kg • m^2	14.2×10^{-4}	38.6×10^{-4}	48.8×10^{-4}
Applicable load inertia		–	10 times the rotor inertia max. *2		
Torque constant *1		N • m/A	0.59	0.70	0.70
Power rate *1	Without brake	kW/s	159	97.1	119
	With brake	kW/s	144	94.5	117
Mechanical time constant	Without brake	ms	0.57	0.65	0.63
	With brake	ms	0.63	0.66	0.64
Electrical time constant		ms	12	20	19
Allowable radial load *3		N	784	784	784
Allowable thrust load *3		N	343	343	343
Weight	Without brake	kg	Approx. 11.0	Approx. 15.5	Approx. 18.6
	With brake	kg	Approx. 12.6	Approx. 18.7	Approx. 21.8
Radiator plate dimensions (material)			380 × 350 × t30 (Al)	470 × 440 × t30 (Al)	
Applicable Servo Drives (R88D-)			KT30H	KT50H	KT50H

Item		Unit	Model (R88M-)		
			200 VAC		
			K3K020H	K4K020H	K5K020H
			K3K020T	K4K020T	K5K020T
Brake specifications	Brake inertia	kg • m^2	1.35×10^{-4}	4.7×10^{-4}	4.7×10^{-4}
	Excitation voltage *4	V	24 VDC ± 10%		
	Power consumption (at 20°C)	W	22	31	31
	Current consumption (at 20°C)	A	0.90±10%	1.3±10%	1.3±10%
	Static friction torque	N • m	16.2 min.	24.5 min.	24.5 min.
	Attraction time *5	ms	110 max.	80 max.	80 max.
	Release time *5	ms	50 max. *6	25 max. *7	25 max. *7
	Backlash		1 (reference value)		
	Allowable work per braking	J	1470	1372	1372
	Allowable total work	J	2.2×10^6	2.9×10^6	2.9×10^6
	Allowable angular acceleration	rad/s^2	10,000		
	Brake limit	–	10 million times min.		
	Rating	–	Continuous		
	Insulation class	–	Type F		

Model (R88M-)			400 VAC			
			K40020F	K60020F	K1K020F	K1K520F
Item		Unit	K40020C	K60020C	K1K020C	K1K520C
Rated output *1		W	400	600	1,000	1,500
Rated torque *1		N • m	1.91	2.86	4.77	7.16
Rated rotation speed		r/min	2,000			
Momentary maximum rotation speed		r/min	3,000			
Momentary maximum torque *1		N • m	5.73	8.59	14.3	21.5
Rated current *1		A (rms)	1.2	1.5	2.8	4.7
Momentary maximum current *1		A (rms)	4.9	6.5	12	20
Rotor inertia	Without brake	kg • m^2	1.61×10^{-4}	2.03×10^{-4}	4.60×10^{-4}	6.70×10^{-4}
	With brake	kg • m^2	1.90×10^{-4}	2.35×10^{-4}	5.90×10^{-4}	7.99×10^{-4}
Applicable load inertia		–	10 times the rotor inertia max. *2			
Torque constant *1		N • m/A	1.27	1.38	1.27	1.16
Power rate *1	Without brake	kW/s	22.7	40.3	49.5	76.5
	With brake	kW/s	19.2	34.8	38.6	64.2
Mechanical time constant	Without brake	ms	0.70	0.62	0.79	0.66
	With brake	ms	0.83	0.72	1.01	0.79
Electrical time constant		ms	5.7	5.9	10	10
Allowable radial load *3		N	490	490	490	490
Allowable thrust load *3		N	196	196	196	196
Weight	Without brake	kg	Approx. 3.1	Approx. 3.5	Approx. 5.2	Approx. 6.7
	With brake	kg	Approx. 4.1	Approx. 4.5	Approx. 6.7	Approx. 8.2
Radiator plate dimensions (material)			320 × 300 × t20 (Al)		275 × 260 × t15 (Al)	
Applicable Servo Drives (R88D-)			KT06F	KT06F	KT10F	KT15F

Item		Unit	Model (R88M-) 400 VAC			
			K40020F	K60020F	K1K020F	K1K520F
			K40020C	K60020C	K1K020C	K1K520C
Brake specifications	Brake inertia	kg • m^2	1.35×10^{-4}	1.35×10^{-4}	1.35×10^{-4}	1.35×10^{-4}
	Excitation voltage *4	V	24 VDC ± 10%			
	Power consumption (at 20°C)	W	17	17	14	19
	Current consumption (at 20°C)	A	0.70±10%	0.70±10%	0.59±10%	0.79±10%
	Static friction torque	N • m	2.5 min.	2.5 min.	4.9 min.	13.7 min.
	Attraction time *5	ms	50 max.	50 max.	80 max.	100 max.
	Release time *5	ms	15 max. *7	15 max. *7	70 max. *6	50 max. *6
	Backlash		1 (reference value)			
	Allowable work per braking	J	392	392	588	1176
	Allowable total work	J	4.9×10^5	4.9×10^5	7.8×10^5	1.5×10^6
	Allowable angular acceleration	rad/s^2	10,000			
	Brake limit	–	10 million times min.			
	Rating	–	Continuous			
	Insulation class	–	Type F			

Item		Unit	400 VAC			
Model (R88M-)			K2K020F	K3K020F	K4K020F	K5K020F
			K2K020C	K3K020C	K4K020C	K5K020C
Rated output *1		W	2,000	3,000	4,000	5,000
Rated torque *1		N • m	9.55	14.3	19.1	23.9
Rated rotation speed		r/min	2,000			
Momentary maximum rotation speed		r/min	3,000			
Momentary maximum torque *1		N • m	28.7	43.0	57.3	71.6
Rated current *1		A (rms)	5.9	8.7	10.6	13.0
Momentary maximum current *1		A (rms)	25	37	45	55
Rotor inertia	Without brake	kg • m^2	8.72×10^{-4}	12.9×10^{-4}	37.6×10^{-4}	48.0×10^{-4}
	With brake	kg • m^2	10.0×10^{-4}	14.2×10^{-4}	38.6×10^{-4}	48.8×10^{-4}
Applicable load inertia		–	10 times the rotor inertia max. *2			
Torque constant *1		N • m/A	1.27	1.18	1.40	1.46
Power rate *1	Without brake	kW/s	105	159	97.1	119
	With brake	kW/s	91.2	144	94.5	117
Mechanical time constant	Without brake	ms	0.68	0.56	0.60	0.60
	With brake	ms	0.78	0.61	0.61	0.61
Electrical time constant		ms	10	12	21	19
Allowable radial load *3		N	490	784	784	784
Allowable thrust load *3		N	196	343	343	343
Weight	Without brake	kg	Approx. 8.0	Approx. 11.0	Approx. 15.5	Approx. 18.6
	With brake	kg	Approx. 9.5	Approx. 12.6	Approx. 18.7	Approx. 21.8
Radiator plate dimensions (material)			275 × 260 × t15 (Al)	380 × 350 × t30 (Al)	470 × 440 × t30 (Al)	
Applicable Servo Drives (R88D-)			KT20F	KT30F	KT50F	KT50F

Item		Unit	Model (R88M-) 400 VAC			
			K2K020F	K3K020F	K4K020F	K5K020F
			K2K020C	K3K020C	K4K020C	K5K020C
Brake specifications	Brake inertia	kg • m^2	1.35×10^{-4}	1.35×10^{-4}	4.7×10^{-4}	4.7×10^{-4}
	Excitation voltage *4	V	24 VDC ± 10%			
	Power consumption (at 20°C)	W	19	22	31	31
	Current consumption (at 20°C)	A	0.79±10%	0.90±10%	1.3±10%	1.3±10%
	Static friction torque	N • m	13.7 min.	16.2 min.	24.5 min.	24.5 min.
	Attraction time *5	ms	100 max.	110 max.	80 max.	80 max.
	Release time *5	ms	50 max. *6	50 max. *6	25 max. *7	25 max. *7
	Backlash		1 (reference value)			
	Allowable work per braking	J	1176	1470	1372	1372
	Allowable total work	J	1.5×10^6	2.2×10^6	2.9×10^6	2.9×10^6
	Allowable angular acceleration	rad/s^2	10,000			
	Brake limit	–	10 million times min.			
	Rating	–	Continuous			
	Insulation class	–	Type F			

*1. These are the values when the Servomotor is combined with a drive at normal temperature (20°C, 65%). The momentary maximum torque indicates the standard value.

*2. Applicable load inertia.

- The operable load inertia ratio (load inertia/rotor inertia) depends on the mechanical configuration and its rigidity. For a machine with high rigidity, operation is possible even with high load inertia. Select an appropriate motor and confirm that operation is possible.
- If the dynamic brake is activated frequently with high load inertia, the Dynamic Brake Resistor may burn. Do not repeatedly turn the servo ON/OFF while the dynamic brake is enabled.

*3. The allowable radial and thrust loads are the values determined for a limit of 20,000 hours at normal operating temperatures.

The allowable radial loads are applied as shown in the following diagram.

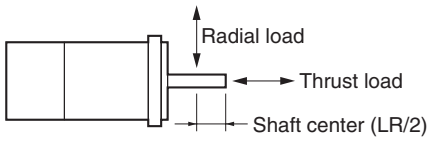

*4. This is a non-excitation brake. (It is released when excitation voltage is applied.)

*5. The operation time is the value (reference value) measured with a surge suppressor (CR50500 by Okaya Electric Industries Co., Ltd.).

*6. Direct current switching with a varistor (TNR9G820K by Nippon Chemi-Con Corporation).

*7. Direct current switching with a varistor (Z15D151 by Ishizuka Electronics Co.).

Torque-Rotation Speed Characteristics for 2,000-r/min Servomotors

- 2,000-r/min Servomotor (200 VAC)

The following graphs show the characteristics with a 3-m standard cable and a 200-VAC input.

• R88M-K1K020H/T (1 kW)

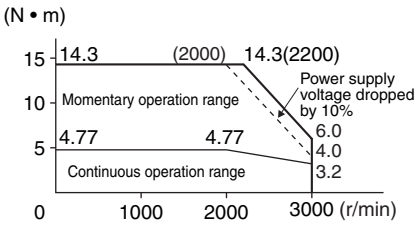

• R88M-K1K520H/T (1.5 kW)

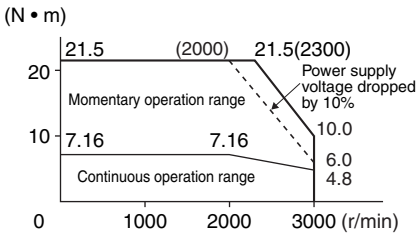

• R88M-K2K020H/T (2 kW)

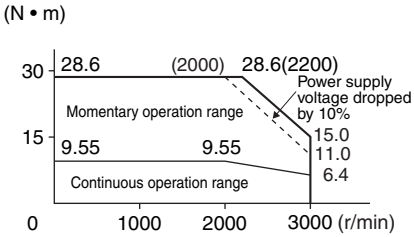

• R88M-K3K020H/T (3 kW)

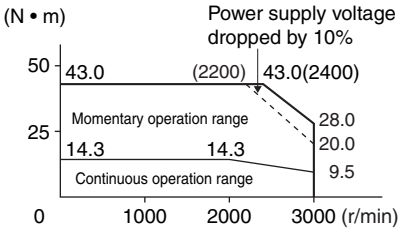

• R88M-K4K020H/T (4 kW)

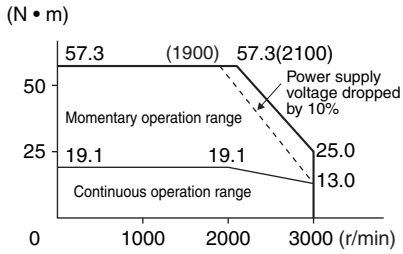

• R88M-K5K020H/T (5 kW)

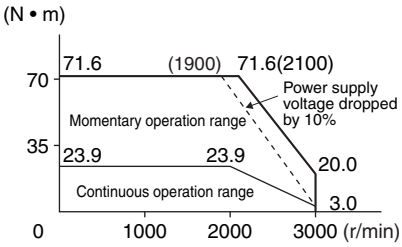

♦ 2,000-r/min Servomotor (400 VAC)
The following graphs show the characteristics with a 3-m standard cable and a 400-VAC input.

• R88M-K40020F/C (400 W)

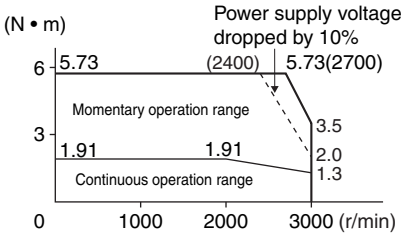

• R88M-K60020F/C (600 W)

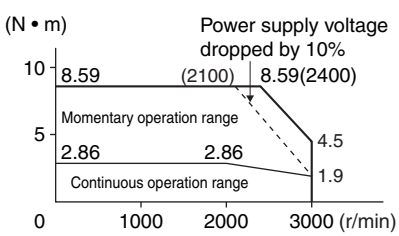

• R88M-K1K020F/C (1 kW)

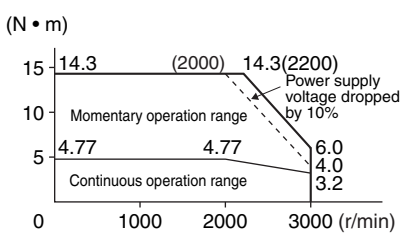

• R88M-K1K520F/C (1.5 kW)

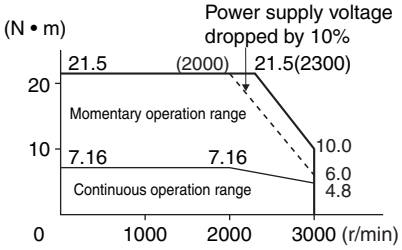

• R88M-K2K020F/C (2 kW)

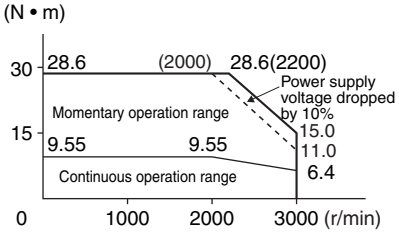

• R88M-K3K020F/C (3 kW)

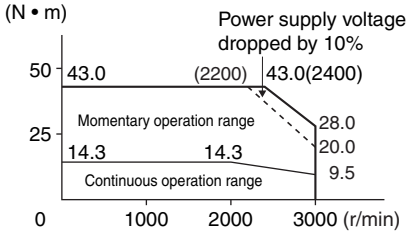

• R88M-K4K020F/C (4 kW)

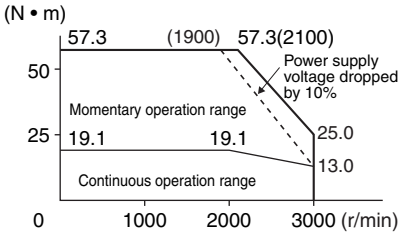

• R88M-K5K020F/C (5 kW)

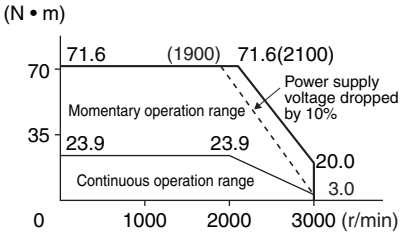

Use the following Servomotors in the ranges shown in the graphs below. Using outside of these ranges may cause the motor to generate heat, which could result in encoder malfunction.

• R88M-K5K020H/T/F/C (5 kW)

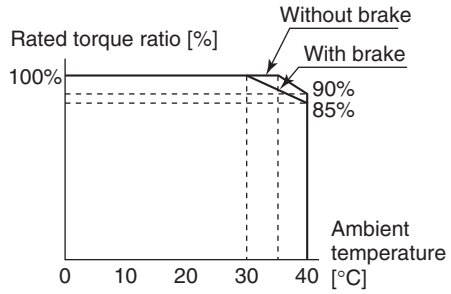

1,000-r/min Servomotors

Item		Unit	Model (R88M-) K90010H / K90010T	K2K010H / K2K010T	K3K010H / K3K010T
			200 VAC		
Rated output *1		W	900	2,000	3,000
Rated torque *1		N • m	8.59	19.1	28.7
Rated rotation speed		r/min	1,000		
Momentary maximum rotation speed		r/min	2,000		
Momentary maximum torque *1		N • m	19.3	47.7	71.7
Rated current *1		A (rms)	7.6	17.0	22.6
Momentary maximum current *1		A (rms)	24	60	80
Rotor inertia	Without brake	kg • m^2	6.70×10^{-4}	30.3×10^{-4}	48.4×10^{-4}
	With brake	kg • m^2	7.99×10^{-4}	31.4×10^{-4}	49.2×10^{-4}
Applicable load inertia		–	10 times the rotor inertia max. *2		
Torque constant *1		N • m/A	0.86	0.88	0.96
Power rate *1	Without brake	kW/s	110	120	170
	With brake	kW/s	92.4	116	167
Mechanical time constant	Without brake	ms	0.66	0.75	0.63
	With brake	ms	0.78	0.78	0.64
Electrical time constant		ms	11	18	21
Allowable radial load *3		N	686	1176	1470
Allowable thrust load *3		N	196	490	490
Weight	Without brake	kg	Approx. 6.7	Approx. 14.0	Approx. 20.0
	With brake	kg	Approx. 8.2	Approx. 17.5	Approx. 23.5
Radiator plate dimensions (material)			270 × 260 × t15 (Al)		
Applicable Servo Drives (R88D-)			KT15H	KT30H	KT50H
Brake specifications	Brake inertia	kg • m^2	1.35×10^{-4}	4.7×10^{-4}	4.7×10^{-4}
	Excitation voltage *4	V	24 VDC ± 10%		
	Power consumption (at 20°C)	W	19	31	34
	Current consumption (at 20°C)	A	0.79±10%	1.3±10%	1.4±10%
	Static friction torque	N • m	13.7 min.	24.5 min.	58.8 min.
	Attraction time *5	ms	100 max.	80 max.	150 max.
	Release time *5	ms	50 max. *6	25 max. *7	50 max. *7
	Backlash		1 (reference value)		

Item		Unit	Model (R88M-) 200 VAC K90010H / K90010T	K2K010H / K2K010T	K3K010H / K3K010T
Brake specifications	Allowable work per braking	J	1176	1372	1372
	Allowable total work	J	1.5×10^6	2.9×10^6	2.9×10^6
	Allowable angular acceleration	rad/s^2	10,000		
	Brake limit	–	10 million times min.		
	Rating	–	Continuous		
	Insulation class	–	Type F		

Item		Unit	Model (R88M-) 400 VAC K90010F / K90010C	K2K010F / K2K010C	K3K010F / K3K010C
Rated output *1		W	900	2,000	3,000
Rated torque *1		N • m	8.59	19.1	28.7
Rated rotation speed		r/min	1,000		
Momentary maximum rotation speed		r/min	2,000		
Momentary maximum torque *1		N • m	19.3	47.7	71.7
Rated current *1		A (rms)	3.8	8.5	11.3
Momentary maximum current *1		A (rms)	12	30	40
Rotor inertia	Without brake	kg • m^2	6.70×10^{-4}	30.3×10^{-4}	48.4×10^{-4}
	With brake	kg • m^2	7.99×10^{-4}	31.4×10^{-4}	49.2×10^{-4}
Applicable load inertia		–	10 times the rotor inertia max. *2		
Torque constant *1		N • m/A	1.72	1.76	1.92
Power rate *1	Without brake	kW/s	110	120	170
	With brake	kW/s	92.4	116	167
Mechanical time constant	Without brake	ms	0.66	0.76	0.61
	With brake	ms	0.79	0.78	0.62
Electrical time constant		ms	11	18	22
Allowable radial load *3		N	686	1176	1470
Allowable thrust load *3		N	196	490	490
Weight	Without brake	kg	Approx. 6.7	Approx. 14.0	Approx. 20.0
	With brake	kg	Approx. 8.2	Approx. 17.5	Approx. 23.5
Radiator plate dimensions (material)			270 × 260 × t15 (Al)	470 × 440 × t30 (Al)	
Applicable Servo Drives (R88D-)			KT15F	KT30F	KT50F

Item		Unit	Model (R88M-) 400 VAC K90010F / K90010C	K2K010F / K2K010C	K3K010F / K3K010C
Brake specifications	Brake inertia	kg • m^2	1.35×10^{-4}	4.7×10^{-4}	4.7×10^{-4}
	Excitation voltage *4	V	24 VDC ± 10%		
	Power consumption (at 20°C)	W	19	31	34
	Current consumption (at 20°C)	A	0.79±10%	1.3±10%	1.4±10%
	Static friction torque	N • m	13.7 min.	24.5 min.	58.8 min.
	Attraction time *5	ms	100 max.	80 max.	150 max.
	Release time *5	ms	50 max. *6	25 max. *7	50 max. *7
	Backlash		1 (reference value)		
	Allowable work per braking	J	1176	1372	1372
	Allowable total work	J	1.5×10^{6}	2.9×10^{6}	2.9×10^{6}
	Allowable angular acceleration	rad/s^2	10,000		
	Brake limit	–	10 million times min.		
	Rating	–	Continuous		
	Insulation class	–	Type F		

*1. These are the values when the Servomotor is combined with a drive at normal temperature (20°C, 65%). The momentary maximum torque indicates the standard value.
*2. Applicable load inertia.
- The operable load inertia ratio (load inertia/rotor inertia) depends on the mechanical configuration and its rigidity. For a machine with high rigidity, operation is possible even with high load inertia. Select an appropriate motor and confirm that operation is possible.
- If the dynamic brake is activated frequently with high load inertia, the Dynamic Brake Resistor may burn. Do not repeatedly turn the servo ON/OFF while the dynamic brake is enabled.

*3. The allowable radial and thrust loads are the values determined for a limit of 20,000 hours at normal operating temperatures.
The allowable radial loads are applied as shown in the following diagram.

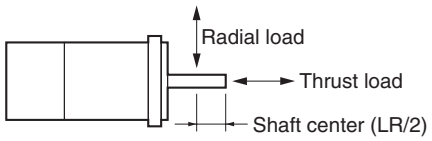

*4. This is a non-excitation brake. (It is released when excitation voltage is applied.)
*5. The operation time is the value (reference value) measured with a surge suppressor (CR50500 by Okaya Electric Industries Co., Ltd.).
*6. Direct current switching with a varistor (TNR9G820K by Nippon Chemi-Con Corporation).
*7. Direct current switching with a varistor (Z15D151 by Ishizuka Electronics Co.).

Torque-Rotation Speed Characteristics for 1,000-r/min Servomotors

- 1,000-r/min Servomotor (200/400 VAC)
The following graphs show the characteristics with a 3-m standard cable and a 200-VAC input.

• R88M-K90010H/T/F/C (900 W)

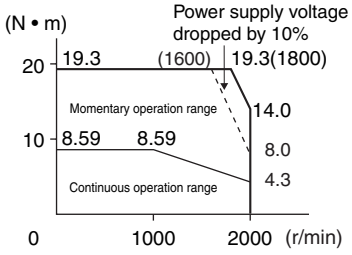

• R88M-K2K010H/T/F/C (2 kW)

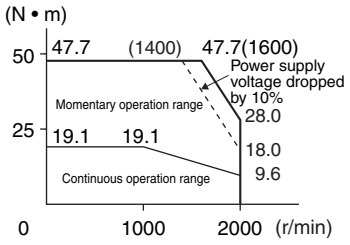

• R88M-K3K010H/T/F/C (3 kW)

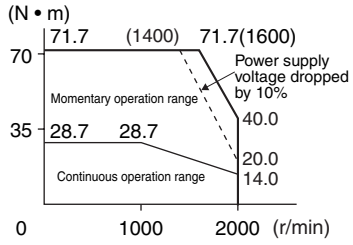

Temperature Characteristics of the Motor and Mechanical System

- OMNUC G5-Series AC Servomotors use rare earth magnets (neodymium-iron magnets). The temperature coefficient for these magnets is approx. -0.13%/°C.
As the temperature drops, the motor's momentary maximum torque increases, and as the temperature rises, the motor's momentary maximum torque decreases.
- The momentary maximum torque rises by 4% at a normal temperature of 20°C compared to a temperature of −10°C. Conversely, the momentary maximum torque decreases about 8% when the magnet warms up to 80°C from the normal temperature.
- Generally, when the temperature drops in a mechanical system, the friction torque and the load torque increase. For that reason, overloading may occur at low temperatures.
In particular, in systems that use a Decelerator, the load torque at low temperatures may be nearly twice as much as the load torque at normal temperatures.
Check whether overloading may occur during starting at low temperature.
Also check to see whether abnormal motor overheating or alarms occur at high temperatures.
- An increase in load friction torque seemingly increases load inertia.
Therefore, even if the drive gains are adjusted at a normal temperature, the motor may not operate properly at low temperatures. Check to see whether optimal operation can be obtained even at low temperatures.

Encoder Specifications

Incremental Encoder Specifications

Item	Specifications
Encoder system	Optical encoder
	20 bits
Number of output pulses	Phases A and B: 262,144 pulses/rotation Phase Z: 1 pulse/rotation
Power supply voltage	5 VDC ± 5%
Power supply current	180 mA (max.)
Output signals	+S, –S
Output interface	RS-485 compliant

Absolute Encoder Specifications

Item	Specifications
Encoder system	Optical encoder
	17 bits
Number of output pulses	Phases A and B: 32,768 pulses/rotation Phase Z: 1 pulse/rotation
Maximum rotations	–32,768 to +32,767 rotations or 0 to 65,535 rotations
Power supply voltage	5 VDC ± 5%
Power supply current	110 mA (max.)
Applicable battery voltage	3.6 VDC
Current consumption of battery	265 μA (for a maximum of 5 s right after power interruption) 100 μA (for operation during power interruption) 3.6 μA (when power is supplied to the Servo Drive)
Output signals	+S, –S
Output interface	RS-485 compliant

3-4 Cable and Connector Specifications

Encoder Cable Specifications

These cables are used to connect the encoder between the Servo Drive and the Servomotor. Select the cable matching the Servomotor. The cables listed are flexible, shielded and have IP67 protection.

Encoder Cables (European Flexible Cables)

R88A-CRKA□CR-E

Cable types
(For both absolute encoders and incremental encoders: [100 V and 200 V] For 3,000-r/min Servomotors of 50 to 750 W)

Model	Length (L)	Outer diameter of sheath
R88A-CRKA001-5CR-E	1.5 m	6.9 dia.
R88A-CRKA003CR-E	3 m	
R88A-CRKA005CR-E	5 m	
R88A-CRKA010CR-E	10 m	
R88A-CRKA015CR-E	15 m	
R88A-CRKA020CR-E	20 m	

Connection configuration and external dimensions

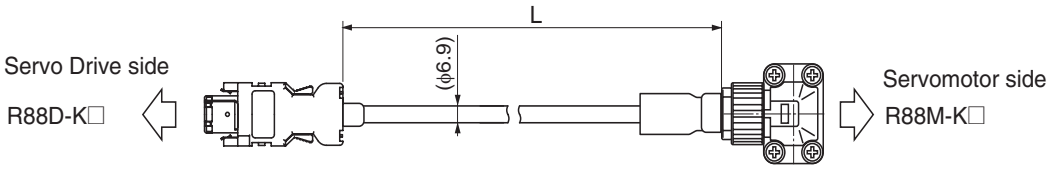

Wiring

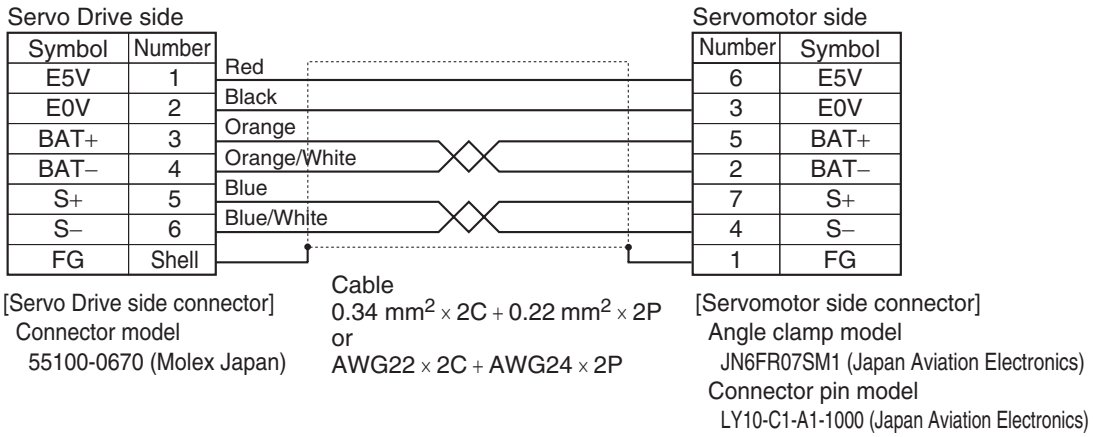

[Servo Drive side connector]
Connector model
55100-0670 (Molex Japan)

Cable
0.34 mm^2 × 2C + 0.22 mm^2 × 2P
or
AWG22 × 2C + AWG24 × 2P

[Servomotor side connector]
Angle clamp model
JN6FR07SM1 (Japan Aviation Electronics)
Connector pin model
LY10-C1-A1-1000 (Japan Aviation Electronics)

R88A-CRKC□NR

Cable types

(For both absolute encoders and incremental encoders: [100 V and 200 V] For 3,000-r/min Servomotors of 1 kW or more, [400 V] 3,000-r/min Servomotors, 2,000-r/min Servomotors and 1,000-r/min Servomotors)

Model	Length (L)	Outer diameter of sheath
R88A-CRKC001-5NR-E	1.5 m	7.6 dia.
R88A-CRKC003NR-E	3 m	
R88A-CRKC005NR-E	5 m	
R88A-CRKC010NR-E	10 m	
R88A-CRKC015NR-E	15 m	
R88A-CRKC020NR-E	20 m	

Connection configuration and external dimensions

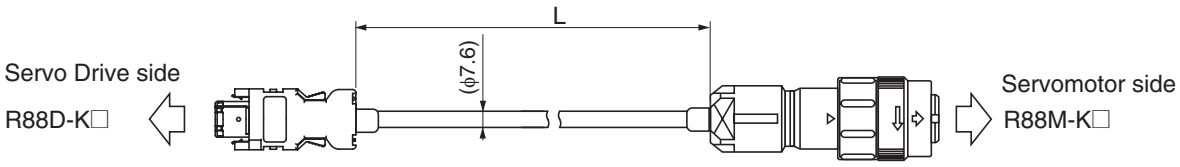

Wiring

Servo Drive side

Symbol	Number
E5V	1
E0V	2
BAT+	3
BAT−	4
S+	5
S−	6
FG	Shell

Red
Black
Orange
Orange/White
Blue
Blue/White

Servomotor side

Number	Symbol
4	E5V
1	E0V
6	BAT+
5	BAT−
3	S+
7	S−
9	FG

[Servo Drive side connector]
Connector model
55100-0670 (Molex Japan)

Cable
1 mm^2 × 2C + 0.22 mm^2 × 2P
or
AWG17 × 2C + AWG24 × 2P

[Servomotor side connector]
Straight plug model
JN2DS10SL2-R (Japan Aviation Electronics)
Cable clamp model
JN1-22-22S-10000 (Japan Aviation Electronics)

Motor Power Cable Specifications

These cables connect the Servo Drive and the Servomotor. Select the cable matching the Servomotor.

The cables listed are flexible, shielded and have IP67 protection.

Power Cables without Brakes (European Flexible Cables)

R88A-CAKA□SR-E

Cable types
[100 V and 200 V] (For 3,000-r/min Servomotors of 50 to 750 W)

Model	Length (L)	Outer diameter of sheath
R88A-CAKA001-5SR-E	1.5 m	6.7 dia.
R88A-CAKA003SR-E	3 m	
R88A-CAKA005SR-E	5 m	
R88A-CAKA010SR-E	10 m	
R88A-CAKA015SR-E	15 m	
R88A-CAKA020SR-E	20 m	

Connection configuration and external dimensions

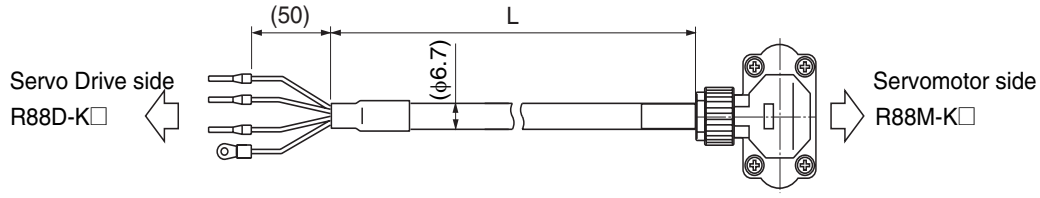

Wiring

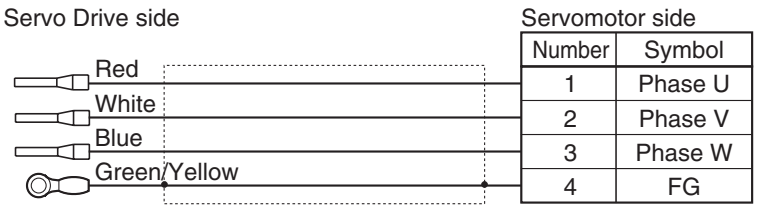

Servomotor side

Number	Symbol
1	Phase U
2	Phase V
3	Phase W
4	FG

Cable
0.5 mm^2 × 4C or AWG20 × 4C

[Servomotor side connector]
Angle plug model
JN8FT04SJ1 (Japan Aviation Electronics)
Connector pin model
ST-TMH-S-C1B-3500-A534G (Japan Aviation Electronics)

Note: for servomotors with brake a separate cable R88A-CAKA□□□BR-E is needed.

R88A-CAGB□SR-E

Cable types
200 V:
(For 3,000-r/min Servomotors of 1 to 2 kW, 2,000-r/min Servomotors of 1 to 2 kW, 1,000-r/min Servomotors of 900 W)
400 V:
(For 3,000-r/min Servomotors of 750W to 2 kW, 2,000-r/min Servomotors of 400 W to 2 kW, 1,000-r/min Servomotors of 900 W)

Model	Length (L)	Outer diameter of sheath
R88A-CAGB001-5SR-E	1.5 m	12.7 dia.
R88A-CAGB003SR-E	3 m	
R88A-CAGB005SR-E	5 m	
R88A-CAGB010SR-E	10 m	
R88A-CAGB015SR-E	15 m	
R88A-CAGB020SR-E	20 m	

Connection configuration and external dimensions

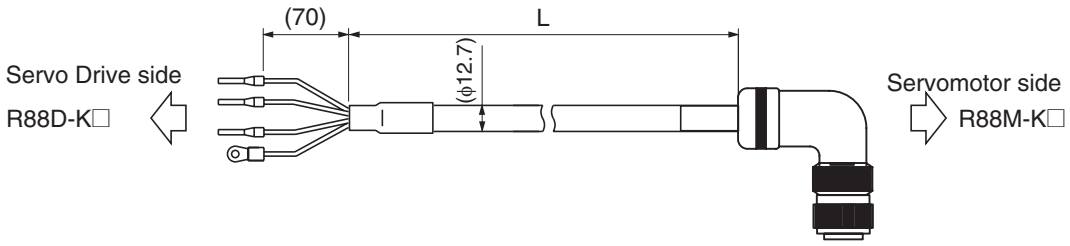

Wiring

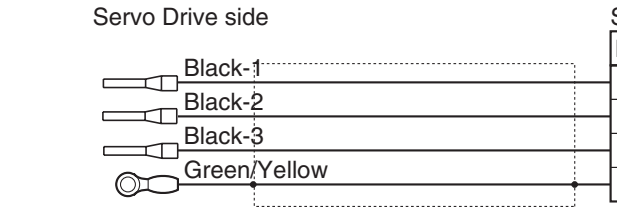

Servomotor side

Number	Symbol
A	Phase U
B	Phase V
C	Phase W
D	FG

Cable
2.5 mm^2 × 4C or AWG14 × 4C

[Servomotor side connector]
Right angle plug model
N/MS3108B20-4S (Japan Aviation Electronics)
Cable clamp model
N/MS3057-12A (Japan Aviation Electronics)

R88A-CAGD□SR-E

Cable types
(For 3,000-r/min Servomotors of 3 to 5 kW, 2,000-r/min Servomotors of 3 to 5 kW, 1,000-r/min Servomotors of 2 to 3 kW)

Model	Length (L)	Outer diameter of sheath
R88A-CAGD001-5SR-E	1.5 m	13.2 dia.
R88A-CAGD003SR-E	3 m	
R88A-CAGD005SR-E	5 m	
R88A-CAGD010SR-E	10 m	
R88A-CAGD015SR-E	15 m	
R88A-CAGD020SR-E	20 m	

Connection configuration and external dimensions

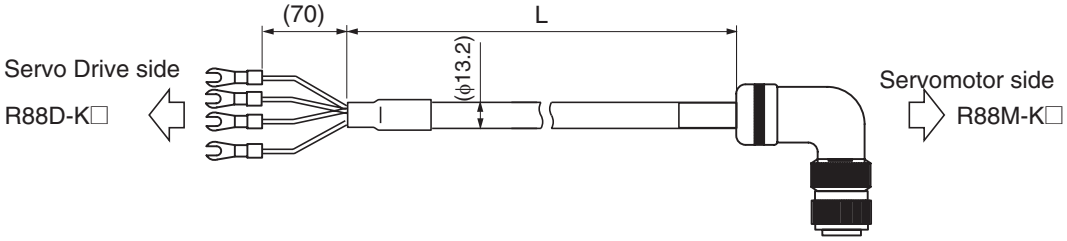

Wiring

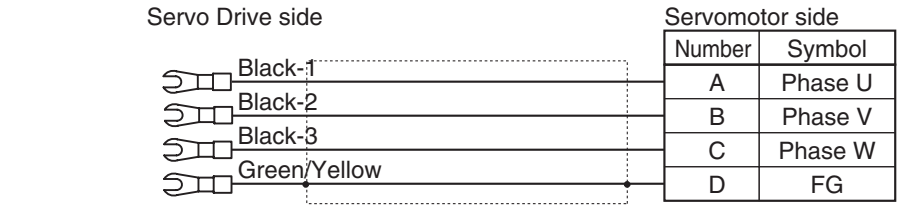

Cable
4 mm^2 × 4C or AWG11 × 4C

[Servomotor side connector]
Right angle plug model
N/MS3108B22-22S (Japan Aviation Electronics)
Cable clamp model
N/MS3057-12A (Japan Aviation Electronics)

Power Cables with Brakes (European Flexible Cables)

R88A-CAGB□BR-E

Cable types
200 V:
(For 3,000-r/min Servomotors of 1 to 2 kW, 2,000-r/min Servomotors of 1 to 2 kW, 1,000-r/min Servomotors of 900 W)

Model	Length (L)	Outer diameter of sheath
R88A-CAGB001-5BR-E	1.5 m	12.5 dia.
R88A-CAGB003BR-E	3 m	
R88A-CAGB005BR-E	5 m	
R88A-CAGB010BR-E	10 m	
R88A-CAGB015BR-E	15 m	
R88A-CAGB020BR-E	20 m	

Connection configuration and external dimensions

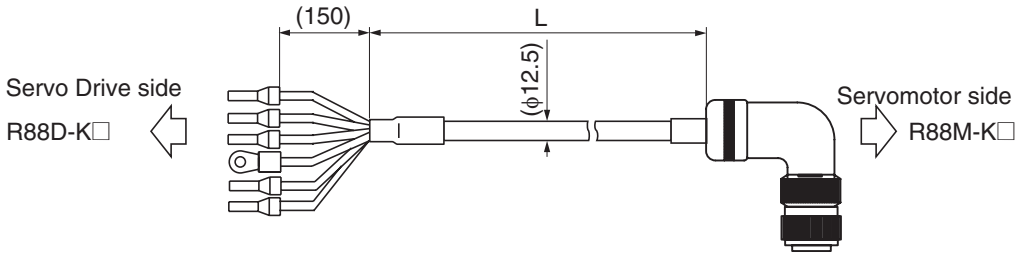

Wiring

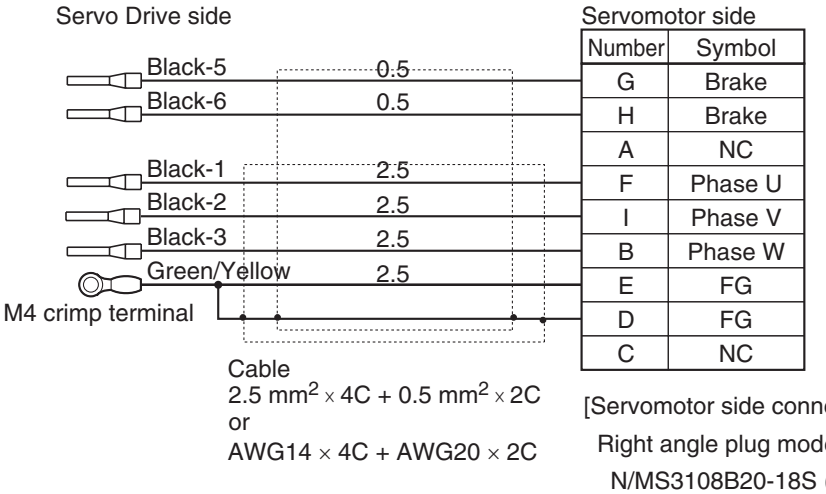

Servomotor side

Number	Symbol
G	Brake
H	Brake
A	NC
F	Phase U
I	Phase V
B	Phase W
E	FG
D	FG
C	NC

[Servomotor side connector]
Right angle plug model
N/MS3108B20-18S (Japan Aviation Electronics)
Cable clamp model
N/MS3057-12A (Japan Aviation Electronics)

R88A-CAKF□BR-E

Cable types
400 V:
(For 3,000-r/min Servomotors of 750W to 2 kW, 2,000-r/min Servomotors of 400 W to 2 kW, 1,000-r/min Servomotors of 900 W)

Model	Length (L)	Outer diameter of sheath
R88A-CAKF001-5BR-E	1.5 m	12.5 dia.
R88A-CAKF003BR-E	3 m	
R88A-CAKF005BR-E	5 m	
R88A-CAKF010BR-E	10 m	
R88A-CAKF015BR-E	15 m	
R88A-CAKF020BR-E	20 m	

Connection configuration and external dimensions

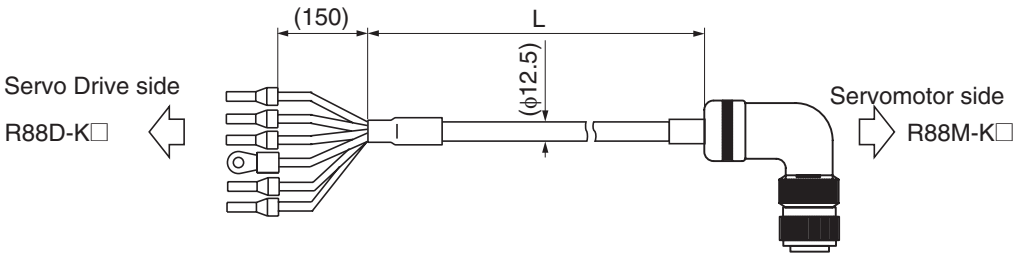

Wiring

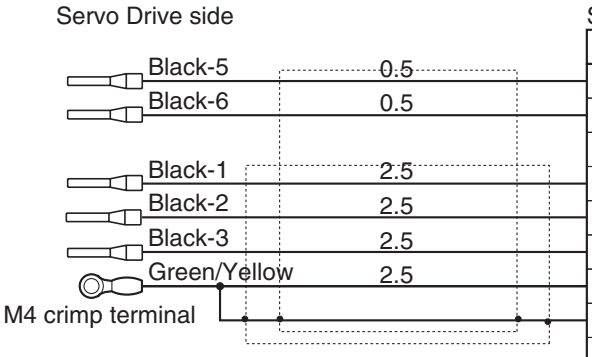

Servomotor side

Number	Symbol
A	Brake
B	Brake
I	NC
D	Phase U
E	Phase V
F	Phase W
G	FG
H	FG
C	NC

Cable
2.5 mm^2 × 4C + 0.5 mm^2 × 2C
or
AWG14 × 4C + AWG20 × 2C

[Servomotor side connector]
Right angle plug model
N/MS3108B24-11S (Japan Aviation Electronics)
Cable clamp model
N/MS3057-16A (Japan Aviation Electronics)

R88A-CAGD□BR-E

Cable types
(For 3,000-r/min Servomotors of 3 to 5 kW, 2,000-r/min Servomotors of 3 to 5 kW, 1,000-r/min Servomotors of 2 to 3 kW)

Model	Length (L)	Outer diameter of sheath
R88A-CAGD001-5BR-E	1.5 m	13.5 dia.
R88A-CAGD003BR-E	3 m	
R88A-CAGD005BR-E	5 m	
R88A-CAGD010BR-E	10 m	
R88A-CAGD015BR-E	15 m	
R88A-CAGD020BR-E	20 m	

Connection configuration and external dimensions

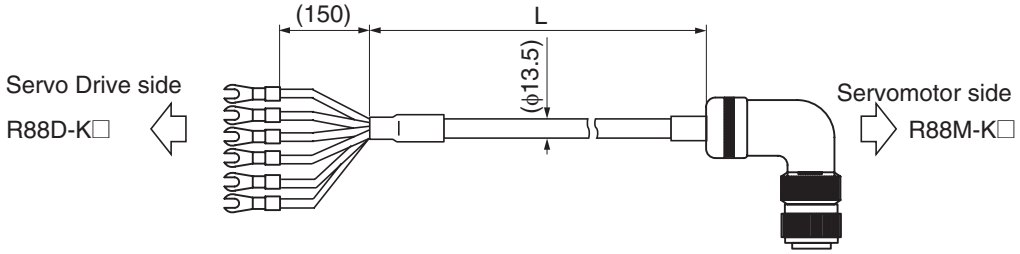

Wiring

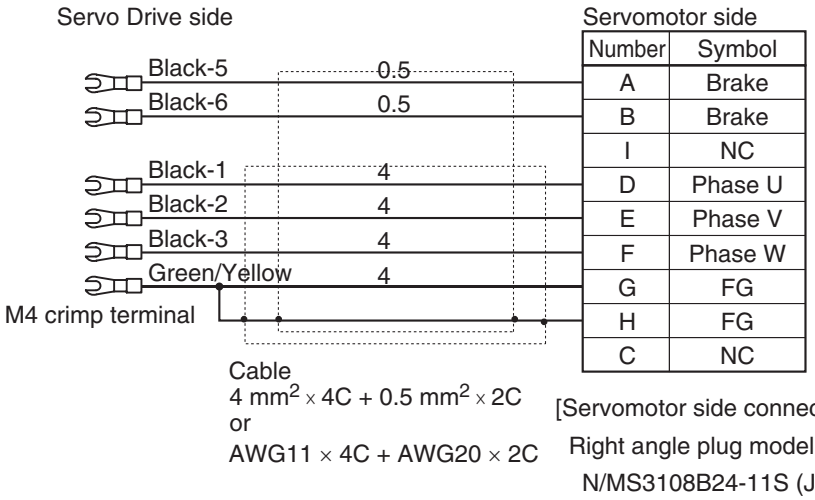

Servomotor side

Number	Symbol
A	Brake
B	Brake
I	NC
D	Phase U
E	Phase V
F	Phase W
G	FG
H	FG
C	NC

[Servomotor side connector]
Right angle plug model
N/MS3108B24-11S (Japan Aviation Electronics)
Cable clamp model
N/MS3057-16A (Japan Aviation Electronics)

Brake Cables (European Flexible Cables)

R88A-CAKA□BR-E

Cable types
100 and 200 V:
(For 3,000-r/min Servomotors of 50 to 750 W)

Model	Length (L)	Outer diameter of sheath
R88A-CAKA001-5BR-E	1.5 m	6.0 dia.
R88A-CAKA003BR-E	3 m	
R88A-CAKA005BR-E	5 m	
R88A-CAKA010BR-E	10 m	
R88A-CAKA015BR-E	15 m	
R88A-CAKA020BR-E	20 m	

Connection configuration and external dimensions

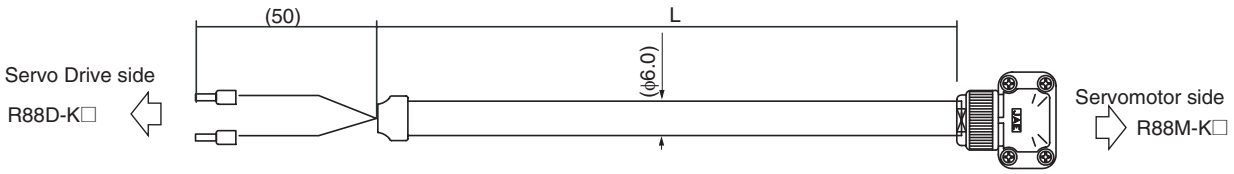

Wiring

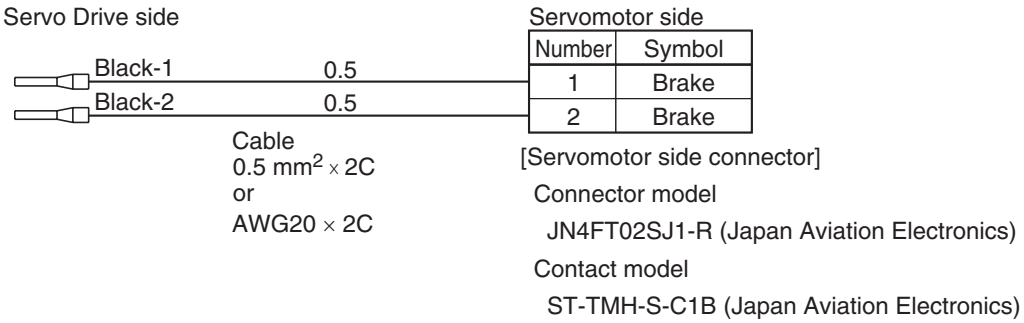

Connector Specifications

Control I/O Connector (R88A-CNU11C)

This is the connector to be connected to the Servo Drive's control I/O connector (CN1).
Use this connector when preparing a control cable by yourself.

Dimensions

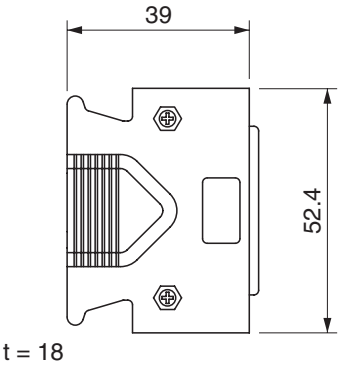

Connector plug model
10150-3000PE (Sumitomo 3M)
Connector case model
10350-52A0-008 (Sumitomo 3M)

Encoder Connectors

These connectors are used for encoder cables.
Use them when preparing an encoder cable by yourself.

Dimensions

R88A-CNW01R (Drive's CN2 side)

This connector is soldered.
Use the following cable.

- Applicable wire: AWG16 max.
- Insulating cover outer diameter: 2.1 mm dia. max.
- Outer diameter of sheath: 6.7 ± 0.5 mm dia.

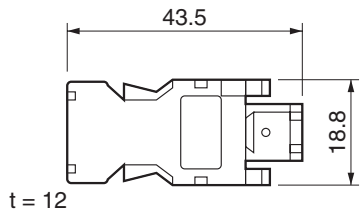

Connector plug model
55100-0670 (Molex Japan)

R88A-CNK02R (Servomotor side) **ABS**
Use the following cable.

- Applicable wire: AWG22 max.
- Insulating cover outer diameter: 1.3 mm dia. max.
- Outer diameter of sheath: 5 ± 0.5 mm dia.

Adaptive motors
100-V, 3,000-r/min Servomotors of 50 to 400 W
200-V, 3,000-r/min Servomotors of 50 to 750 W

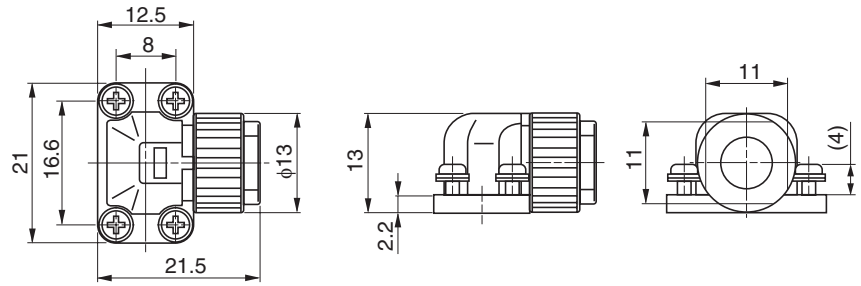

Angle clamp model JN6FR07SM1
(Japan Aviation Electronics)
Connector pin model LY10-C1-A1-10000
(Japan Aviation Electronics)

R88A-CNK04R (Servomotor side) **ABS**
Use the following cable.

- Applicable wire: AWG20 max.
- Outer diameter of sheath: 6.5 to 8.0 dia.

Adaptive motors
200-V, 3,000-r/min Servomotors of 1.0 to 5.0 kW
200-V, 2,000-r/min Servomotors of all capacities
200-V, 1,000-r/min Servomotors of all capacities
400-V, 3,000-r/min Servomotors of all capacities
400-V, 2,000-r/min Servomotors of all capacities
400-V, 1,000-r/min Servomotors of all capacities

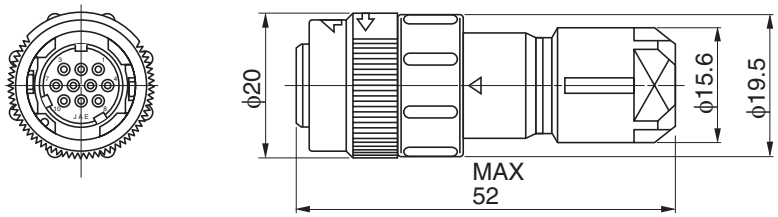

Straight plug model JN2DS10SL2-R
(Japan Aviation Electronics)
Contact model JN1-22-22S-R-PKG100
(Japan Aviation Electronics)

Power Cable Connector (R88A-CNK11A)

This connector is used for power cables.
Use it when preparing a power cable by yourself.

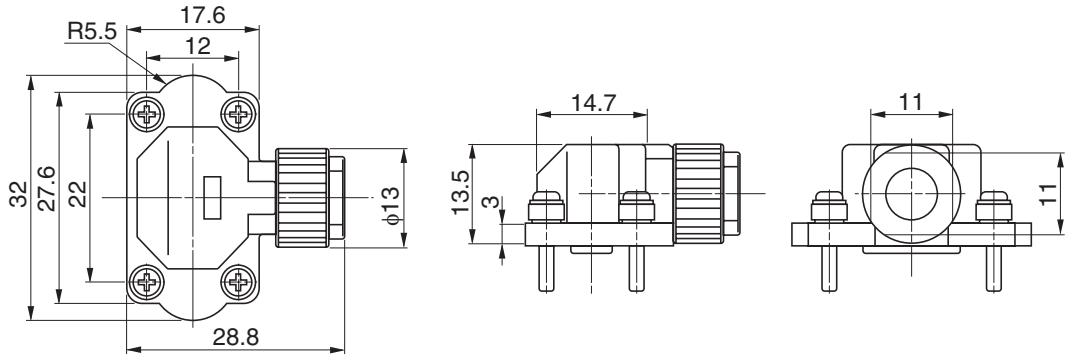

Angle plug model JN8FT04SJ1
(Japan Aviation Electronics)
Socket contact model ST-TMH-S-C1B-3500-(A534G)
(Japan Aviation Electronics)

Brake Cable Connector (R88A-CNK11B)

This connector is used for brake cables.
Use it when preparing a brake cable by yourself.

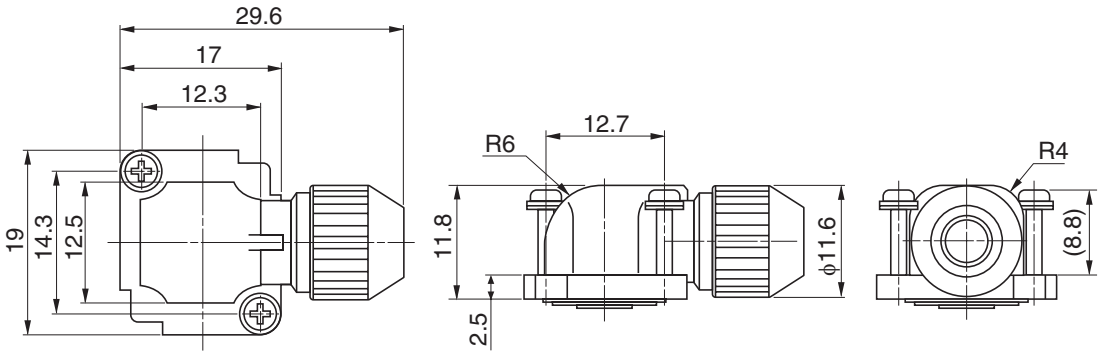

Angle plug model JN4FT02SJ1-R
(Japan Aviation Electronics)
Socket contact model ST-TMH-S-C1B-3500-(A534G)
(Japan Aviation Electronics)

Analog Monitor Cable Specifications

Analog Monitor Cable (R88A-CMK001S)

Connection configuration and external dimensions

Symbol	No.	
SP	1	Red
IM	2	Black
GND	3	White
	4	
	5	
	6	

Cable: AWG24 × 3C UL1007

Connector housing: 51004-0600 (Molex Japan)
Connector terminal: 50011-8100 (Molex Japan)

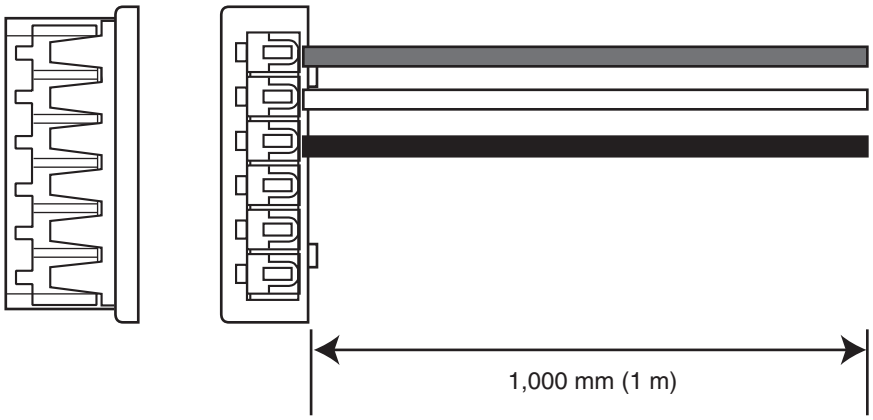

External Encoder Connector (R88A-CNK41L)

Use this connector to connect to an external encoder in fully-closed control.

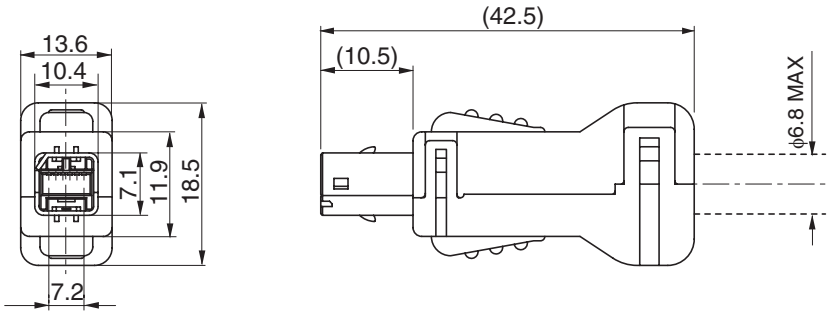

Connector plug model
MUF-PK10K-X (J.S.T. Mfg. Co., Ltd.)

Safety I/O Signal Connector (R88A-CNK81S)

Use this connector to connect to a safety device.

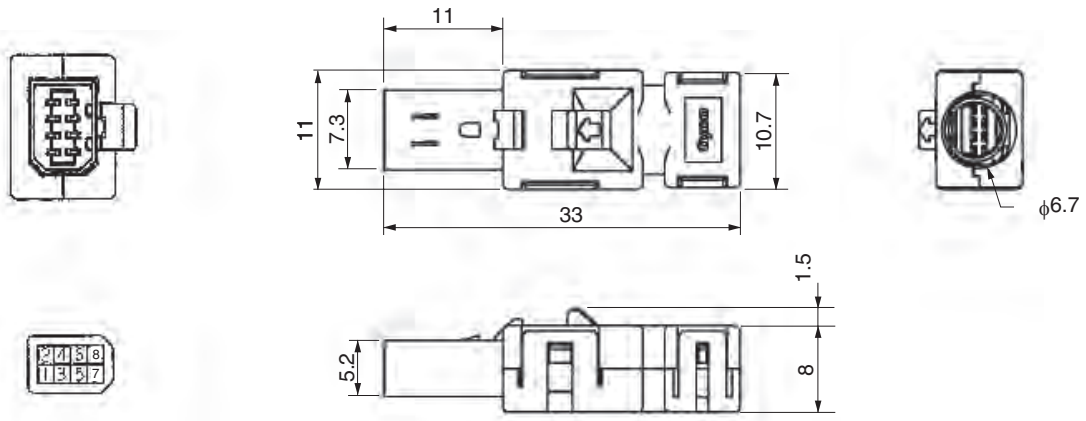

Control Cable Specifications

Specified Cables for Motion Control Unit (R88A-CPG□M□)

Use this cable to connect to the Motion Control Units for OMRON Programmable Controllers (SYSMAC). Cables are available for either 1 axis or 2 axes.
The following Motion Control Units can be used.
CS1W-MC221/421(-V1)

Cable types

- Cables for 1 axis

Model	Length (L)	Outer diameter of sheath	Weight
R88A-CPG001M1	1 m	8.3 dia.	Approx. 0.2 kg
R88A-CPG002M1	2 m		Approx. 0.3 kg
R88A-CPG003M1	3 m		Approx. 0.4 kg
R88A-CPG005M1	5 m		Approx. 0.6 kg

- Cables for 2 axes

Model	Length (L)	Outer diameter of sheath	Weight
R88A-CPG001M2	1 m	8.3 dia.	Approx. 0.3 kg
R88A-CPG002M2	2 m		Approx. 0.5 kg
R88A-CPG003M2	3 m		Approx. 0.7 kg
R88A-CPG005M2	5 m		Approx. 1.0 kg

Connection configuration and external dimensions

- Cables for 1 axis

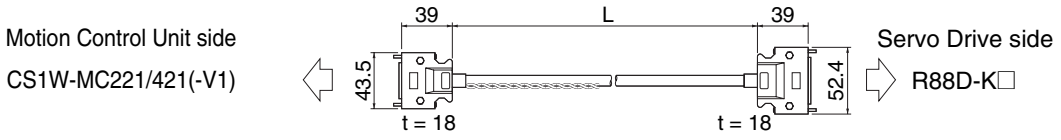

- Cables for 2 axes

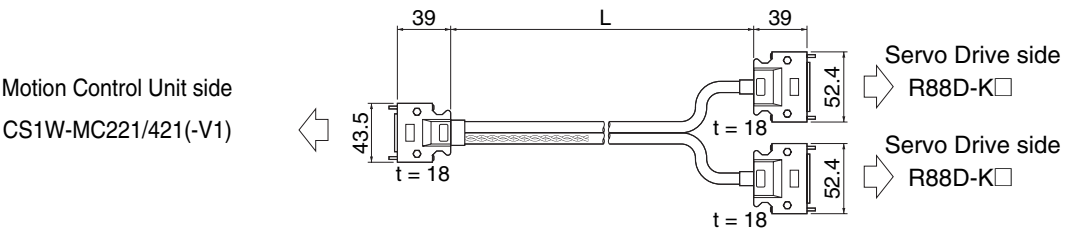

Wiring

- Cables for 1 axis

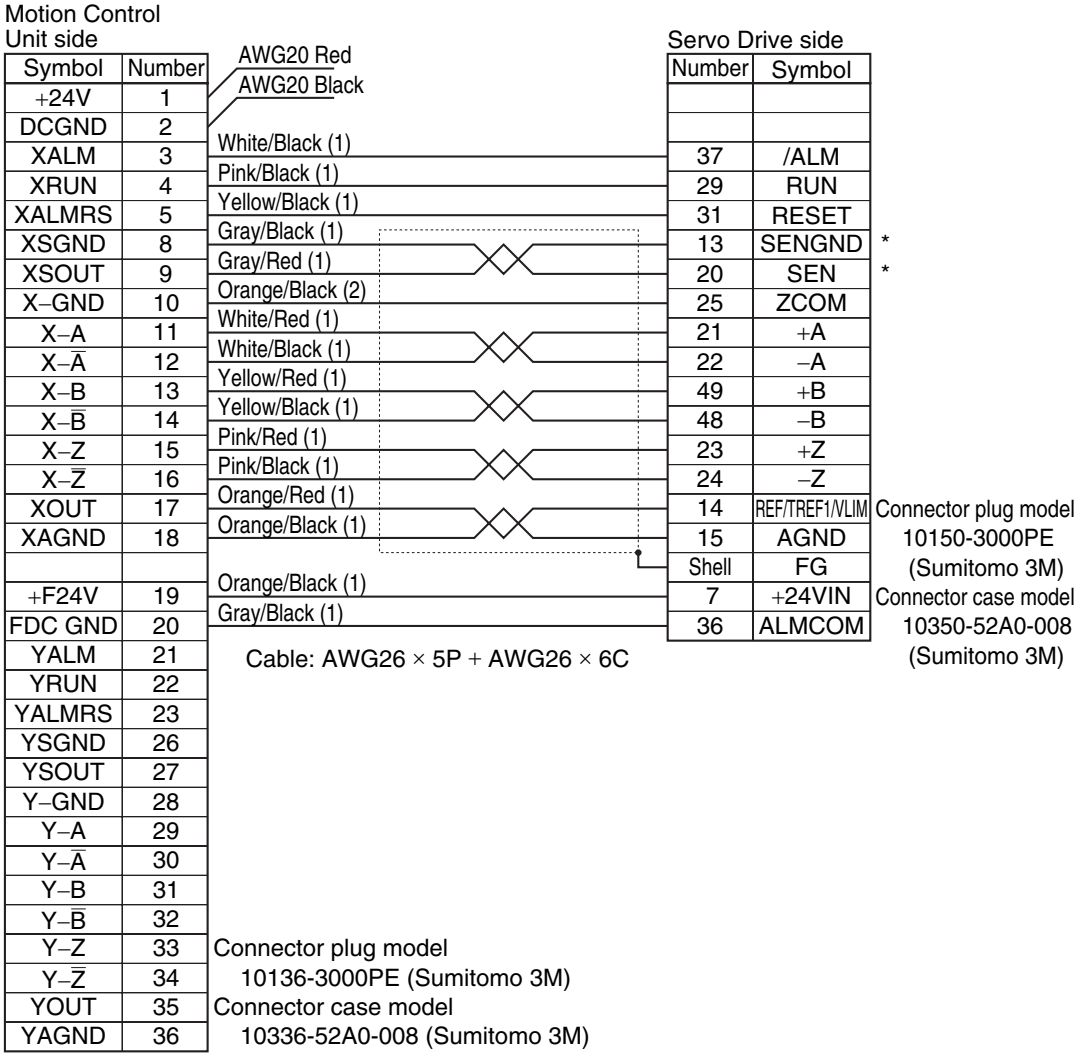

Symbol	Number
+24V	1
DCGND	2
XALM	3
XRUN	4
XALMRS	5
XSGND	8
XSOUT	9
X–GND	10
X–A	11
X–$\overline{A}$	12
X–B	13
X–$\overline{B}$	14
X–Z	15
X–$\overline{Z}$	16
XOUT	17
XAGND	18
+F24V	19
FDC GND	20
YALM	21
YRUN	22
YALMRS	23
YSGND	26
YSOUT	27
Y–GND	28
Y–A	29
Y–$\overline{A}$	30
Y–B	31
Y–$\overline{B}$	32
Y–Z	33
Y–$\overline{Z}$	34
YOUT	35
YAGND	36

Number	Symbol	
37	/ALM	
29	RUN	
31	RESET	
13	SENGND	*
20	SEN	*
25	ZCOM	
21	+A	
22	–A	
49	+B	
48	–B	
23	+Z	
24	–Z	
14	REF/TREF1/VLIM	
15	AGND	
Shell	FG	
7	+24VIN	
36	ALMCOM	

- The symbols on the controller side are the DRVX and DRVY connector symbols. For the DRVZ and DRVU connectors, X and Y are indicated as Z and U, respectively.
- Terminals marked with asterisks are for absolute encoders.
- Connect 24 VDC to the 2 lines (red and black) extending from the connector on the controller side. (red: +24 V, black: -)

- Cables for 2 axes

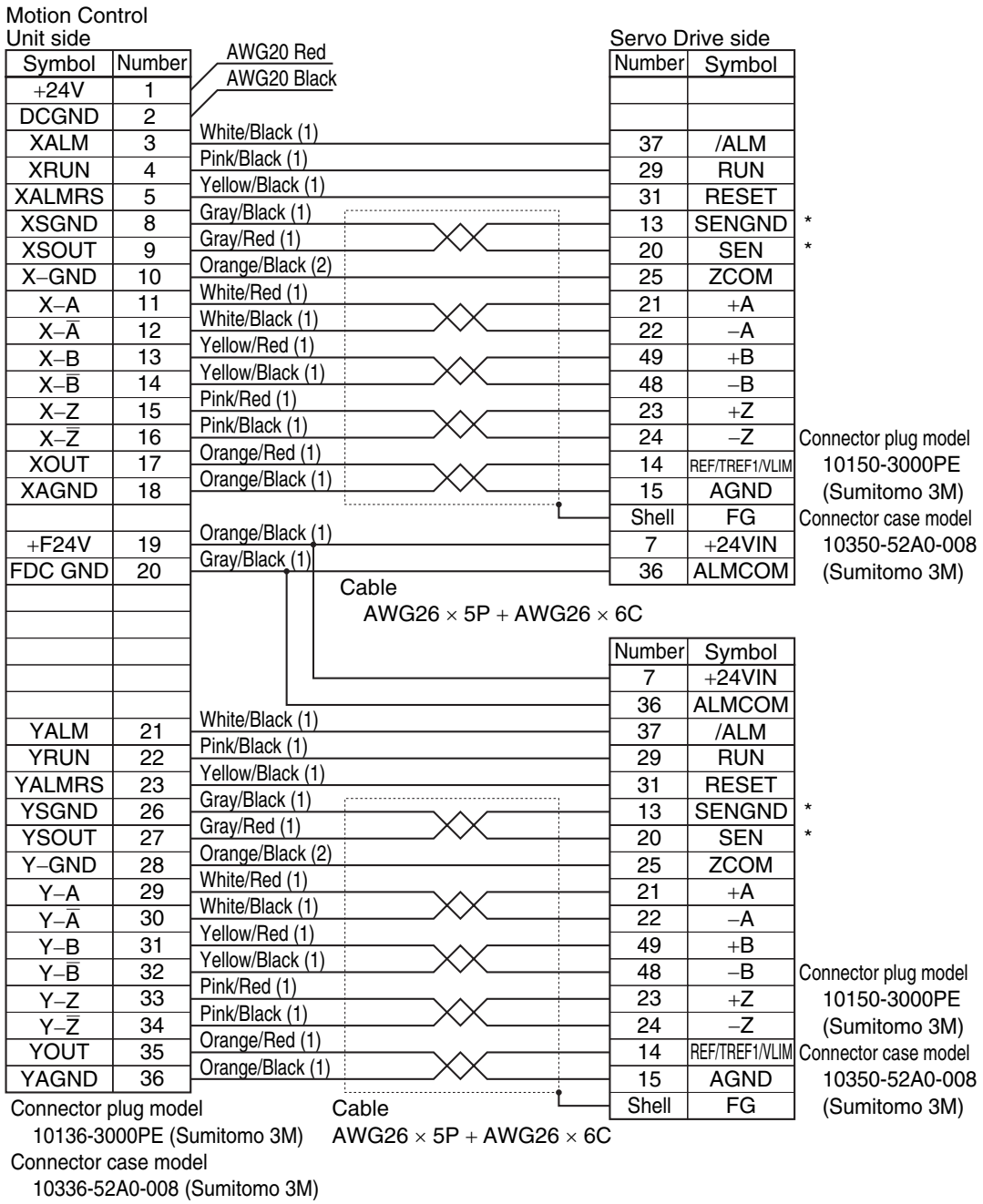

- The symbols on the controller side are the DRVX and DRVY connector symbols. For the DRVZ and DRVU connectors, X and Y are indicated as Z and U, respectively.
- Terminals marked with asterisks are for absolute encoders.
- Connect 24 VDC to the 2 lines (red and black) extending from the connector on the controller side. (red: +24 V, black: -)

Specified Cables for Position Control Unit (for CJ1W-NC□□4 - High-speed Type)

This cable is for connecting Position Control Units (CJ1W-NC□□4) for OMRON Programmable Controller SYSMAC CJ Series. Cables are available for either 1 axis or 2 axes. The following types of Position Control Units are supported.
CJ1W-NC214/-NC414/-NC234/-NC434

Cable types

- Cable for line-driver output for 1 axis

Model	Length
XW2Z-100J-G9	1 m
XW2Z-500J-G9	5 m
XW2Z-10MJ-G9	10 m

- Cable for open collector output for 1 axis

Model	Length
XW2Z-100J-G13	1 m
XW2Z-300J-G13	3 m

- Cable for line-driver output for 2 axes

Model	Length
XW2Z-100J-G1	1 m
XW2Z-500J-G1	5 m
XW2Z-10MJ-G1	10 m

- Cable for open collector output for 2 axes

Model	Length
XW2Z-100J-G5	1 m
XW2Z-300J-G5	3 m

Connection configuration and external dimensions

- Cables for 1 axis

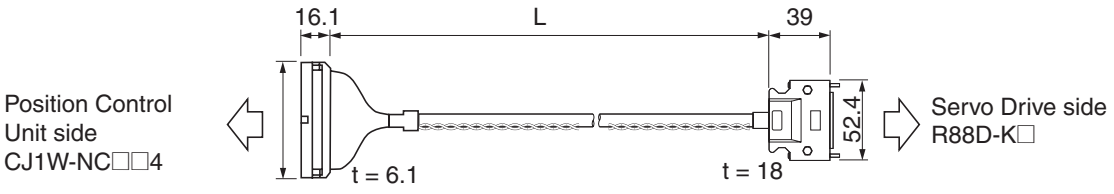

- Cables for 2 axes

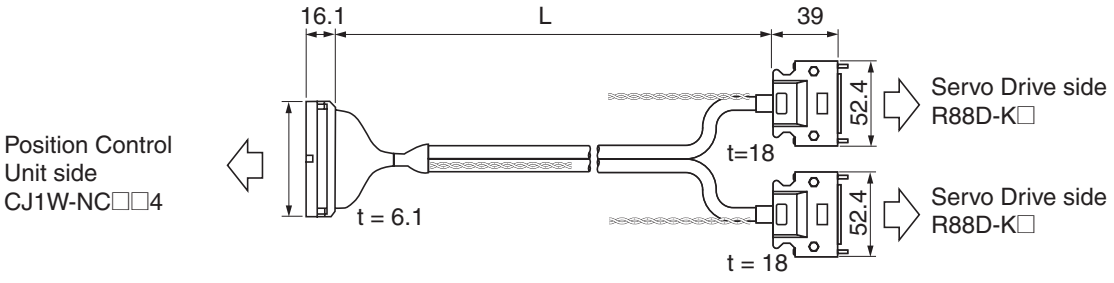

Wiring

- Cable for line-driver output for 1 axis

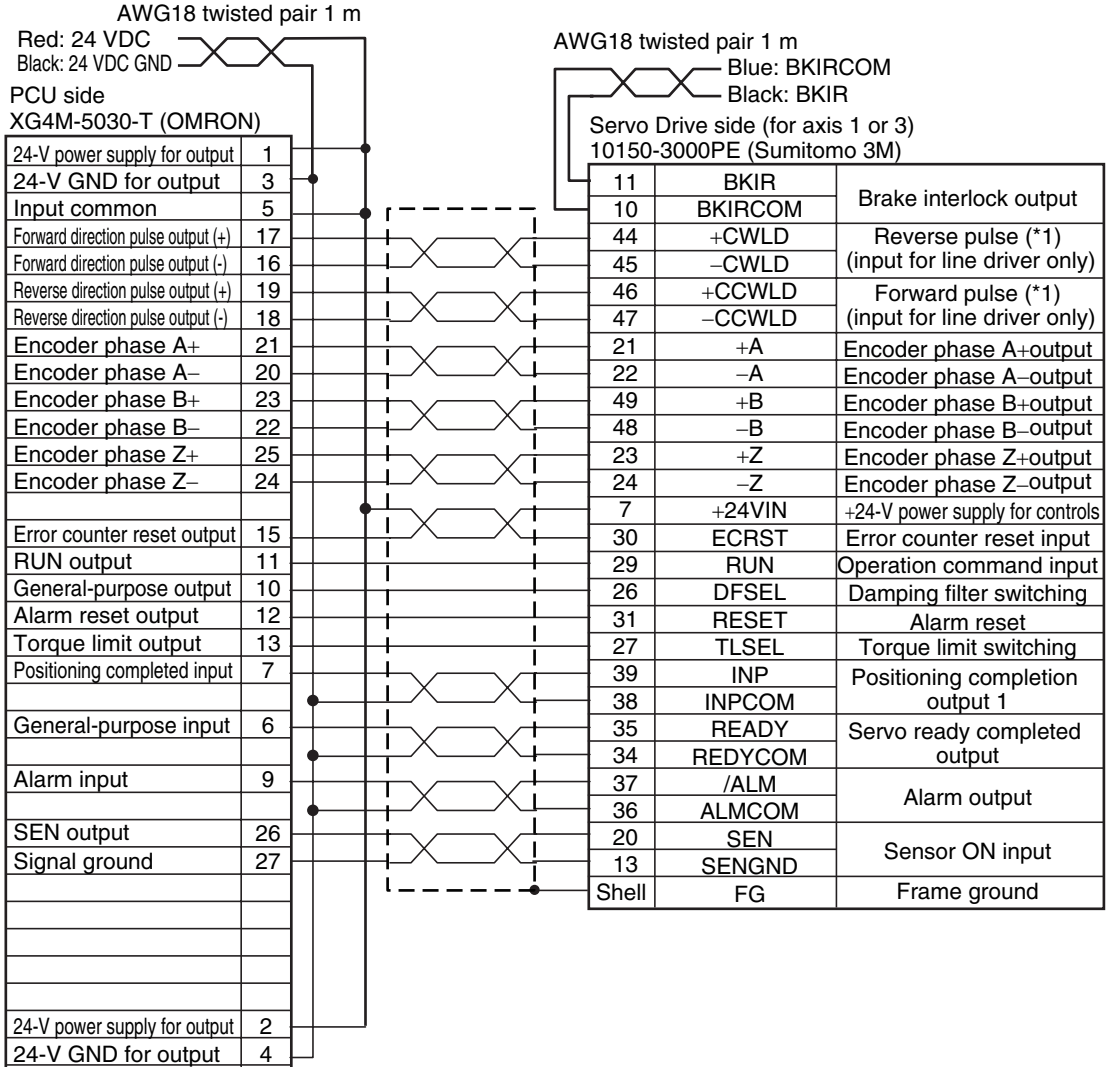

PCU side
XG4M-5030-T (OMRON)

24-V power supply for output	1
24-V GND for output	3
Input common	5
Forward direction pulse output (+)	17
Forward direction pulse output (-)	16
Reverse direction pulse output (+)	19
Reverse direction pulse output (-)	18
Encoder phase A+	21
Encoder phase A–	20
Encoder phase B+	23
Encoder phase B–	22
Encoder phase Z+	25
Encoder phase Z–	24
Error counter reset output	15
RUN output	11
General-purpose output	10
Alarm reset output	12
Torque limit output	13
Positioning completed input	7
General-purpose input	6
Alarm input	9
SEN output	26
Signal ground	27
24-V power supply for output	2
24-V GND for output	4
Input common	50
Forward direction pulse output (+)	39
Forward direction pulse output (–)	38
Reverse direction pulse output (+)	37
Reverse direction pulse output (–)	36
Encoder phase A+	35
Encoder phase A–	34
Encoder phase B+	33
Encoder phase B–	32
Encoder phase Z+	31
Encoder phase Z–	30
Error counter reset output	41
RUN output	45
General-purpose output	44
Alarm reset output	42
Torque limit output	43
Positioning completed input	49
General-purpose input	48
Alarm input	47
SEN output	29
Signal ground	28

Servo Drive side (for axis 1 or 3)
10150-3000PE (Sumitomo 3M)

11	BKIR	Brake interlock output
10	BKIRCOM	
44	+CWLD	Reverse pulse (*1) (input for line driver only)
45	–CWLD	
46	+CCWLD	Forward pulse (*1) (input for line driver only)
47	–CCWLD	
21	+A	Encoder phase A+output
22	–A	Encoder phase A–output
49	+B	Encoder phase B+output
48	–B	Encoder phase B–output
23	+Z	Encoder phase Z+output
24	–Z	Encoder phase Z–output
7	+24VIN	+24-V power supply for controls
30	ECRST	Error counter reset input
29	RUN	Operation command input
26	DFSEL	Damping filter switching
31	RESET	Alarm reset
27	TLSEL	Torque limit switching
39	INP	Positioning completion output 1
38	INPCOM	
35	READY	Servo ready completed output
34	REDYCOM	
37	/ALM	Alarm output
36	ALMCOM	
20	SEN	Sensor ON input
13	SENGND	
Shell	FG	Frame ground

*1 Since the PCU handles forward direction commands as CW-direction/phase-A advance pulses (selectable by the output pulse direction selection parameter), connect the wires as shown here.

• Cable for open collector output for 1 axis

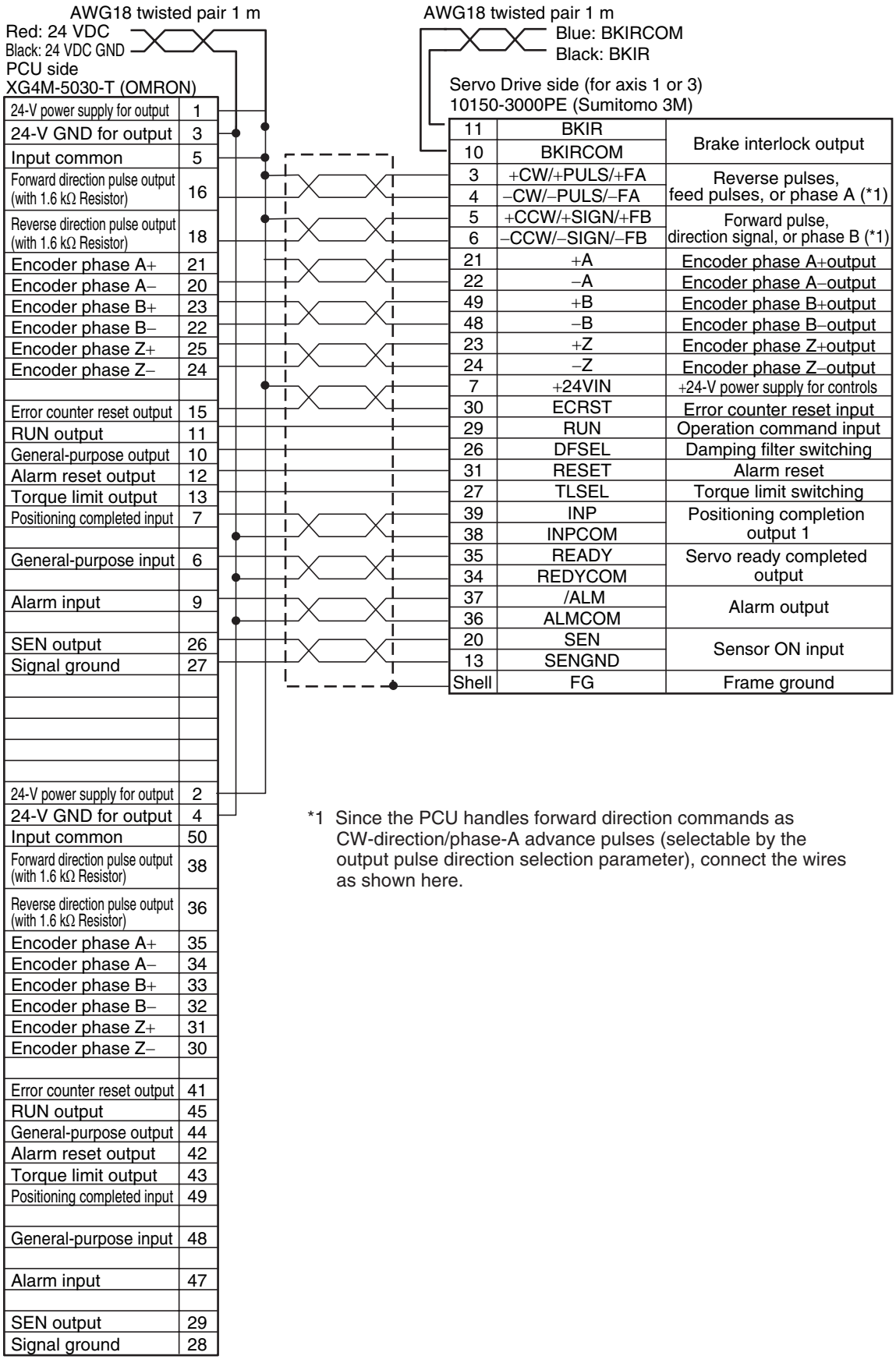

24-V power supply for output	1			
24-V GND for output	3			
Input common	5			
Forward direction pulse output (with 1.6 kΩ Resistor)	16	11	BKIR	Brake interlock output
Reverse direction pulse output (with 1.6 kΩ Resistor)	18	10	BKIRCOM	
Encoder phase A+	21	3	+CW/+PULS/+FA	Reverse pulses, feed pulses, or phase A (*1)
Encoder phase A−	20	4	−CW/−PULS/−FA	
Encoder phase B+	23	5	+CCW/+SIGN/+FB	Forward pulse, direction signal, or phase B (*1)
Encoder phase B−	22	6	−CCW/−SIGN/−FB	
Encoder phase Z+	25	21	+A	Encoder phase A+output
Encoder phase Z−	24	22	−A	Encoder phase A−output
		49	+B	Encoder phase B+output
Error counter reset output	15	48	−B	Encoder phase B−output
RUN output	11	23	+Z	Encoder phase Z+output
General-purpose output	10	24	−Z	Encoder phase Z−output
Alarm reset output	12	7	+24VIN	+24-V power supply for controls
Torque limit output	13	30	ECRST	Error counter reset input
Positioning completed input	7	29	RUN	Operation command input
		26	DFSEL	Damping filter switching
General-purpose input	6	31	RESET	Alarm reset
		27	TLSEL	Torque limit switching
Alarm input	9	39	INP	Positioning completion output 1
		38	INPCOM	
SEN output	26	35	READY	Servo ready completed output
Signal ground	27	34	REDYCOM	
		37	/ALM	Alarm output
		36	ALMCOM	
		20	SEN	Sensor ON input
		13	SENGND	
24-V power supply for output	2	Shell	FG	Frame ground
24-V GND for output	4			
Input common	50			
Forward direction pulse output (with 1.6 kΩ Resistor)	38			
Reverse direction pulse output (with 1.6 kΩ Resistor)	36			
Encoder phase A+	35			
Encoder phase A−	34			
Encoder phase B+	33			
Encoder phase B−	32			
Encoder phase Z+	31			
Encoder phase Z−	30			
Error counter reset output	41			
RUN output	45			
General-purpose output	44			
Alarm reset output	42			
Torque limit output	43			
Positioning completed input	49			
General-purpose input	48			
Alarm input	47			
SEN output	29			
Signal ground	28			

*1 Since the PCU handles forward direction commands as CW-direction/phase-A advance pulses (selectable by the output pulse direction selection parameter), connect the wires as shown here.

• Cable for line-driver output for 2 axes

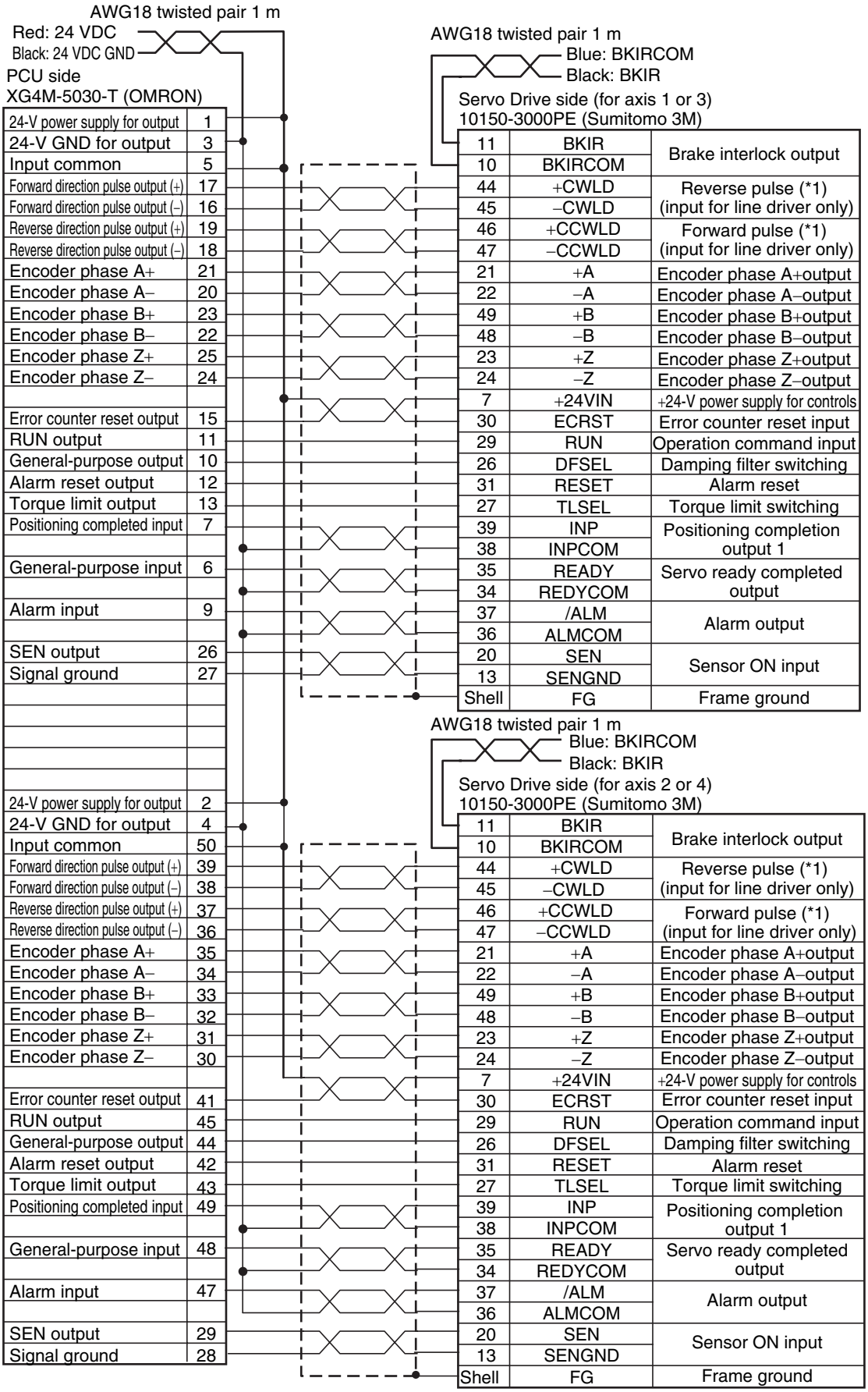

PCU side		Servo Drive side (for axis 1 or 3)		
24-V power supply for output	1			
24-V GND for output	3			
Input common	5			
Forward direction pulse output (+)	17	44	+CWLD	Reverse pulse (*1) (input for line driver only)
Forward direction pulse output (–)	16	45	–CWLD	
Reverse direction pulse output (+)	19	46	+CCWLD	Forward pulse (*1) (input for line driver only)
Reverse direction pulse output (–)	18	47	–CCWLD	
Encoder phase A+	21	21	+A	Encoder phase A+output
Encoder phase A–	20	22	–A	Encoder phase A–output
Encoder phase B+	23	49	+B	Encoder phase B+output
Encoder phase B–	22	48	–B	Encoder phase B–output
Encoder phase Z+	25	23	+Z	Encoder phase Z+output
Encoder phase Z–	24	24	–Z	Encoder phase Z–output
		7	+24VIN	+24-V power supply for controls
Error counter reset output	15	30	ECRST	Error counter reset input
RUN output	11	29	RUN	Operation command input
General-purpose output	10	26	DFSEL	Damping filter switching
Alarm reset output	12	31	RESET	Alarm reset
Torque limit output	13	27	TLSEL	Torque limit switching
Positioning completed input	7	39	INP	Positioning completion output 1
		38	INPCOM	
General-purpose input	6	35	READY	Servo ready completed output
		34	REDYCOM	
Alarm input	9	37	/ALM	Alarm output
		36	ALMCOM	
SEN output	26	20	SEN	Sensor ON input
Signal ground	27	13	SENGND	
		Shell	FG	Frame ground
24-V power supply for output	2			
24-V GND for output	4			
Input common	50			
Forward direction pulse output (+)	39	44	+CWLD	Reverse pulse (*1) (input for line driver only)
Forward direction pulse output (–)	38	45	–CWLD	
Reverse direction pulse output (+)	37	46	+CCWLD	Forward pulse (*1) (input for line driver only)
Reverse direction pulse output (–)	36	47	–CCWLD	
Encoder phase A+	35	21	+A	Encoder phase A+output
Encoder phase A–	34	22	–A	Encoder phase A–output
Encoder phase B+	33	49	+B	Encoder phase B+output
Encoder phase B–	32	48	–B	Encoder phase B–output
Encoder phase Z+	31	23	+Z	Encoder phase Z+output
Encoder phase Z–	30	24	–Z	Encoder phase Z–output
		7	+24VIN	+24-V power supply for controls
Error counter reset output	41	30	ECRST	Error counter reset input
RUN output	45	29	RUN	Operation command input
General-purpose output	44	26	DFSEL	Damping filter switching
Alarm reset output	42	31	RESET	Alarm reset
Torque limit output	43	27	TLSEL	Torque limit switching
Positioning completed input	49	39	INP	Positioning completion output 1
		38	INPCOM	
General-purpose input	48	35	READY	Servo ready completed output
		34	REDYCOM	
Alarm input	47	37	/ALM	Alarm output
		36	ALMCOM	
SEN output	29	20	SEN	Sensor ON input
Signal ground	28	13	SENGND	
		Shell	FG	Frame ground

*1 Since the PCU handles forward direction commands as CW-direction/phase-A advance pulses (selectable by the output pulse direction selection parameter), connect the wires as shown here.

• Cable for open collector output for 2 axes

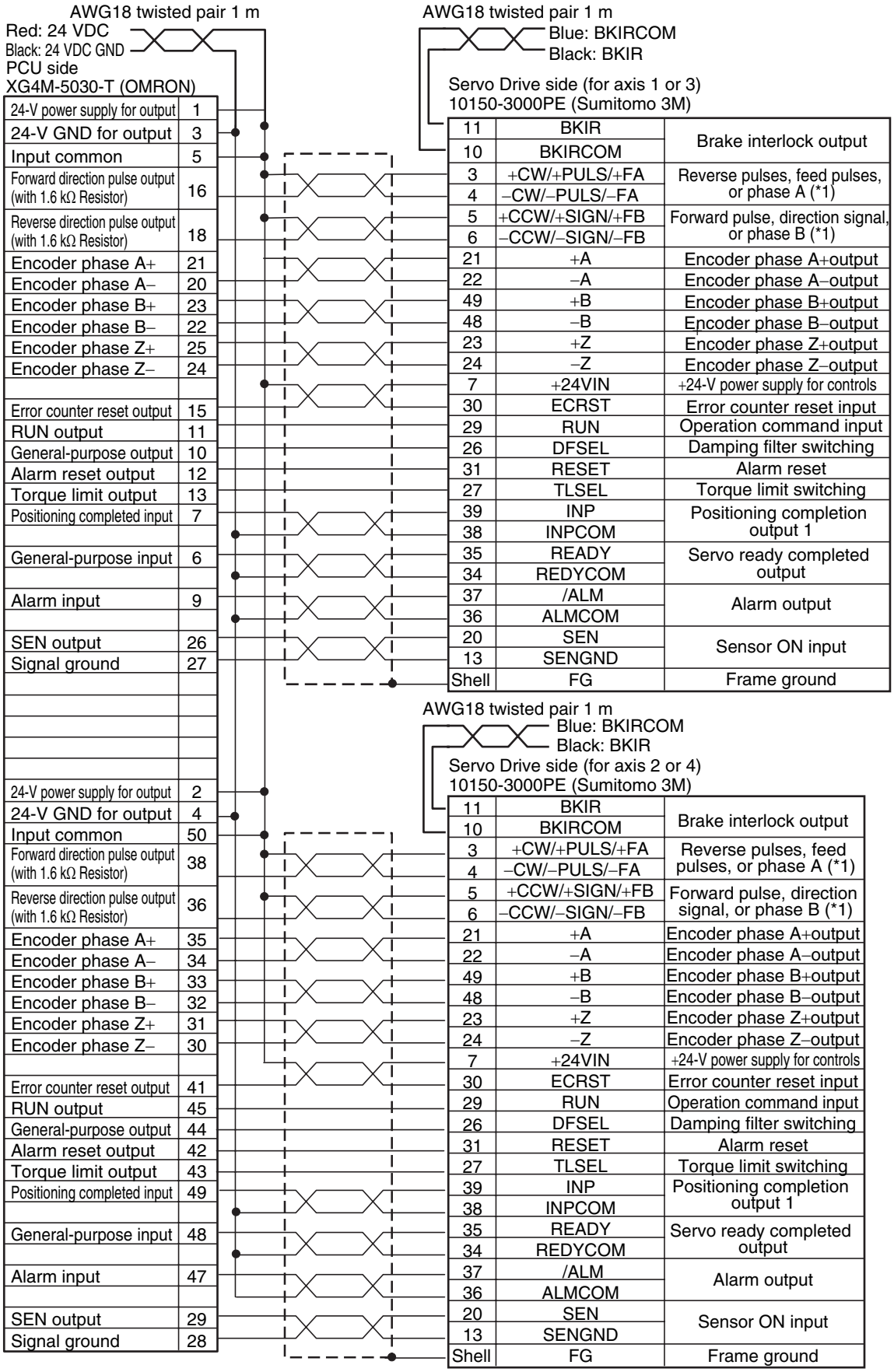

PCU side		Servo Drive side (for axis 1 or 3)		
24-V power supply for output	1			
24-V GND for output	3			
Input common	5			
Forward direction pulse output (with 1.6 kΩ Resistor)	16	3	+CW/+PULS/+FA	Reverse pulses, feed pulses, or phase A (*1)
		4	–CW/–PULS/–FA	
Reverse direction pulse output (with 1.6 kΩ Resistor)	18	5	+CCW/+SIGN/+FB	Forward pulse, direction signal, or phase B (*1)
		6	–CCW/–SIGN/–FB	
Encoder phase A+	21	21	+A	Encoder phase A+output
Encoder phase A–	20	22	–A	Encoder phase A–output
Encoder phase B+	23	49	+B	Encoder phase B+output
Encoder phase B–	22	48	–B	Encoder phase B–output
Encoder phase Z+	25	23	+Z	Encoder phase Z+output
Encoder phase Z–	24	24	–Z	Encoder phase Z–output
		7	+24VIN	+24-V power supply for controls
Error counter reset output	15	30	ECRST	Error counter reset input
RUN output	11	29	RUN	Operation command input
General-purpose output	10	26	DFSEL	Damping filter switching
Alarm reset output	12	31	RESET	Alarm reset
Torque limit output	13	27	TLSEL	Torque limit switching
Positioning completed input	7	39	INP	Positioning completion output 1
		38	INPCOM	
General-purpose input	6	35	READY	Servo ready completed output
		34	REDYCOM	
Alarm input	9	37	/ALM	Alarm output
		36	ALMCOM	
SEN output	26	20	SEN	Sensor ON input
Signal ground	27	13	SENGND	
		Shell	FG	Frame ground
		11	BKIR	Brake interlock output
		10	BKIRCOM	
24-V power supply for output	2			
24-V GND for output	4			
Input common	50			
Forward direction pulse output (with 1.6 kΩ Resistor)	38	3	+CW/+PULS/+FA	Reverse pulses, feed pulses, or phase A (*1)
		4	–CW/–PULS/–FA	
Reverse direction pulse output (with 1.6 kΩ Resistor)	36	5	+CCW/+SIGN/+FB	Forward pulse, direction signal, or phase B (*1)
		6	–CCW/–SIGN/–FB	
Encoder phase A+	35	21	+A	Encoder phase A+output
Encoder phase A–	34	22	–A	Encoder phase A–output
Encoder phase B+	33	49	+B	Encoder phase B+output
Encoder phase B–	32	48	–B	Encoder phase B–output
Encoder phase Z+	31	23	+Z	Encoder phase Z+output
Encoder phase Z–	30	24	–Z	Encoder phase Z–output
		7	+24VIN	+24-V power supply for controls
Error counter reset output	41	30	ECRST	Error counter reset input
RUN output	45	29	RUN	Operation command input
General-purpose output	44	26	DFSEL	Damping filter switching
Alarm reset output	42	31	RESET	Alarm reset
Torque limit output	43	27	TLSEL	Torque limit switching
Positioning completed input	49	39	INP	Positioning completion output 1
		38	INPCOM	
General-purpose input	48	35	READY	Servo ready completed output
		34	REDYCOM	
Alarm input	47	37	/ALM	Alarm output
		36	ALMCOM	
SEN output	29	20	SEN	Sensor ON input
Signal ground	28	13	SENGND	
		Shell	FG	Frame ground

*1 Since the PCU handles forward direction commands as CW-direction/phase-A advance pulses (selectable by the output pulse direction selection parameter), connect the wires as shown here.

General-purpose Control Cables (R88A-CPG□S)

This is a cable attached to the connector to be connected to the drive's control I/O connector (CN1). The connector for the controller is not provided. When connecting to a Position Control Unit which does not have a specified cable or connecting to another company's controller, prepare wiring suited for the controller to be connected.

- When connecting to a controller which does not have a specified cable, either use a general-purpose control cable or a connector-terminal block cable and a connector-terminal block.

Cable types

Model	Length (L)	Outer diameter of sheath	Weight
R88A-CPG001S	1 m	12.8 dia.	Approx. 0.3 kg
R88A-CPG002S	2 m		Approx. 0.6 kg

Connection configuration and external dimensions

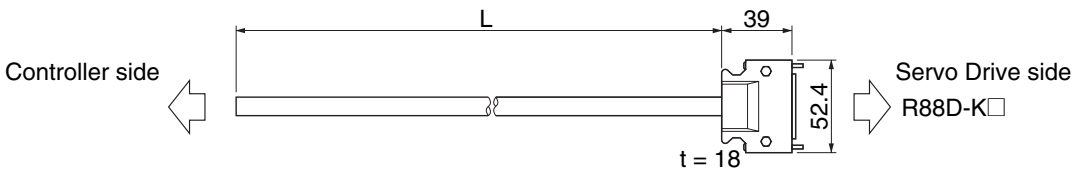

Wiring

Number	Wire/Mark color	Symbol
1	Orange/Red (1)	+24VCW
2	Orange/Black (1)	+24VCCW
3	Gray/Red (1)	+CW/+PULS/+FA
4	Gray/Black (1)	–CW/–PULS/–FA
5	White/Red (1)	+CCW/+SIGN/+FB
6	White/Black (1)	–CCW/–SIGN/–FB
7	Yellow/Red (1)	+24VIN
8	Pink/Red (1)	SI1
9	Pink/Black (1)	SI2
10	Orange/Red (2)	SO1–
11	Orange/Black (2)	SO1+
12	Yellow/Black (1)	–––
13	Gray/Black (2)	SENGND
14	White/Red (2)	REF/TREF1/VLIM
15	White/Black (2)	AGND1
16	Yellow/Red (2)	PCL/TREF2
17	Yellow/Black (2), Pink/Black (2)	AGND2
18	Pink/Red (2)	NCL
19	Orange/Red (5)	Z
20	Gray/Red (2)	SEN
21	Orange/Red (3)	+A
22	Orange/Black (3)	–A
23	Gray/Red (3)	+Z
24	Gray/Black (3)	–Z
25	Orange/Black (5)	ZCOM
26	White/Red (3)	SI3

Number	Wire/Mark color	Symbol
27	Pink/Black (3)	SI4
28	White/Black (3)	SI5
29	Yellow/Red (3)	SI6
30	Pink/Red (3)	SI7
31	Yellow/Black (3)	SI8
32	Gray/Black (4)	SI9
33	Orange/Red (4)	SI10
34	White/Red (4)	S02–
35	White/Black (4)	S02+
36	Yellow/Red (4)	ALMCOM
37	Yellow/Black (4)	/ALM
38	Pink/Red (4)	S03–
39	Pink/Black (4)	S03+
40	Gray/Red (4)	–––
41	Orange/Black (4)	–––
42	Gray/Red (5)	BAT
43	Gray/Black (5)	BATGND
44	White/Red (5)	+CWLD
45	White/Black (5)	–CWLD
46	Yellow/Red (5)	+CCWLD
47	Yellow/Black (5)	–CCWLD
48	Pink/Black (5)	–B
49	Pink/Red (5)	+B
50	–––	–––
Shell	–––	FG

Connector plug model: 10150-3000PE (Sumitomo 3M)
Connector case model: 10350-52A0-008 (Sumitomo 3M)
Cable: AWG24 × 25P UL20276

- Wires with the same wire color and the same number of marks form a twisted pair.
  Example: Wires with respective wire and mark colors of orange/red (1) and orange/black (1) form a twisted pair.

Terminal Block Cables (XW2Z-□J-B24)

This is a cable to connect the Servo drive I/O signals (CN1 connector) to a terminal block for general-purpose. All servo drive I/O signals are wired.

Cable types

Model	Length (L)	Outer diameter of sheath	Weight
XW2Z-100J-B24	1 m	11.2 dia.	Approx. 0.2 kg
XW2Z-200J-B24	2 m		Approx. 0.4 kg

Connection configuration and external dimensions

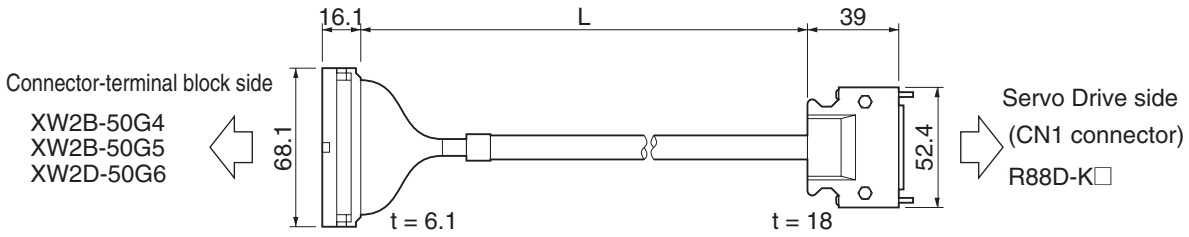

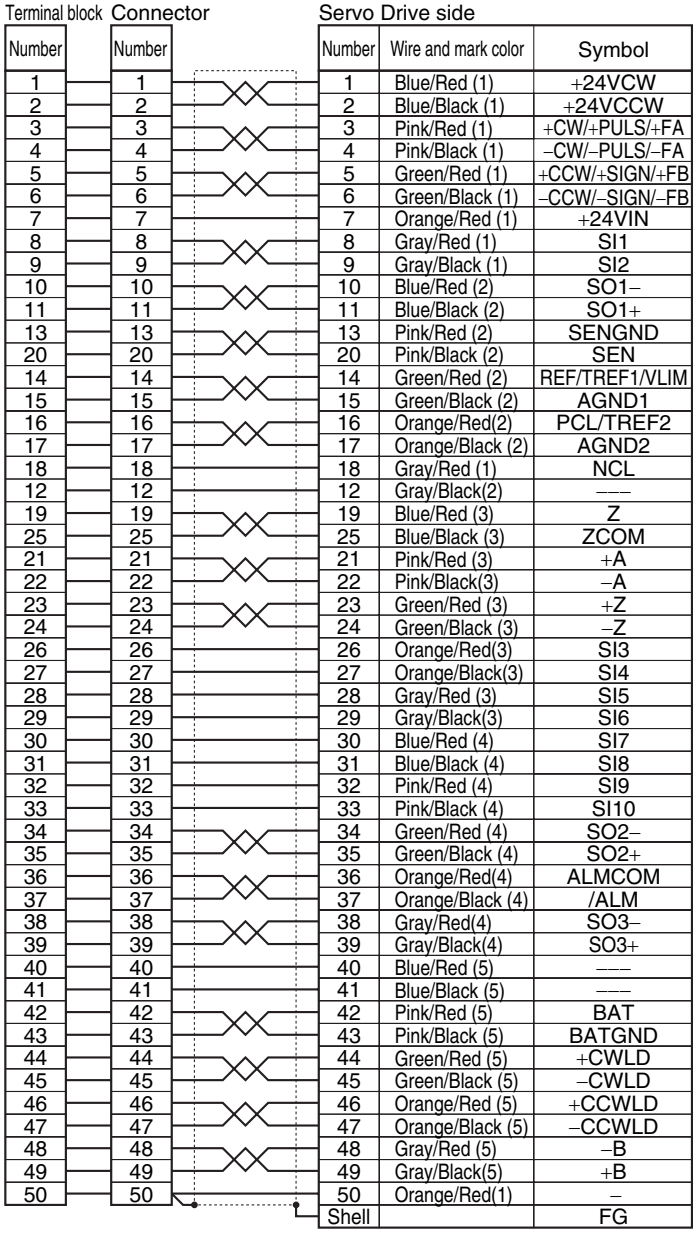

Terminal block Number	Connector Number	Servo Drive side Number	Wire and mark color	Symbol
1	1	1	Blue/Red (1)	+24VCW
2	2	2	Blue/Black (1)	+24VCCW
3	3	3	Pink/Red (1)	+CW/+PULS/+FA
4	4	4	Pink/Black (1)	–CW/–PULS/–FA
5	5	5	Green/Red (1)	+CCW/+SIGN/+FB
6	6	6	Green/Black (1)	–CCW/–SIGN/–FB
7	7	7	Orange/Red (1)	+24VIN
8	8	8	Gray/Red (1)	SI1
9	9	9	Gray/Black (1)	SI2
10	10	10	Blue/Red (2)	SO1–
11	11	11	Blue/Black (2)	SO1+
13	13	13	Pink/Red (2)	SENGND
20	20	20	Pink/Black (2)	SEN
14	14	14	Green/Red (2)	REF/TREF1/VLIM
15	15	15	Green/Black (2)	AGND1
16	16	16	Orange/Red(2)	PCL/TREF2
17	17	17	Orange/Black (2)	AGND2
18	18	18	Gray/Red (1)	NCL
12	12	12	Gray/Black(2)	–––
19	19	19	Blue/Red (3)	Z
25	25	25	Blue/Black (3)	ZCOM
21	21	21	Pink/Red (3)	+A
22	22	22	Pink/Black(3)	–A
23	23	23	Green/Red (3)	+Z
24	24	24	Green/Black (3)	–Z
26	26	26	Orange/Red(3)	SI3
27	27	27	Orange/Black(3)	SI4
28	28	28	Gray/Red (3)	SI5
29	29	29	Gray/Black(3)	SI6
30	30	30	Blue/Red (4)	SI7
31	31	31	Blue/Black (4)	SI8
32	32	32	Pink/Red (4)	SI9
33	33	33	Pink/Black (4)	SI10
34	34	34	Green/Red (4)	SO2–
35	35	35	Green/Black (4)	SO2+
36	36	36	Orange/Red(4)	ALMCOM
37	37	37	Orange/Black (4)	/ALM
38	38	38	Gray/Red(4)	SO3–
39	39	39	Gray/Black(4)	SO3+
40	40	40	Blue/Red (5)	–––
41	41	41	Blue/Black (5)	–––
42	42	42	Pink/Red (5)	BAT
43	43	43	Pink/Black (5)	BATGND
44	44	44	Green/Red (5)	+CWLD
45	45	45	Green/Black (5)	–CWLD
46	46	46	Orange/Red (5)	+CCWLD
47	47	47	Orange/Black (5)	–CCWLD
48	48	48	Gray/Red (5)	–B
49	49	49	Gray/Black(5)	+B
50	50	50	Orange/Red(1)	–
		Shell		FG

• 1 Wires with the same wire color and the same number of marks form a twisted pair
Example: Wires with respective wire and mark colors of Yellow/Black (1) and Pink/Black (1) form a twisted pair

Servo Drive Connector:
Connector plug model
10150-3000PE (Sumitomo 3M)
Connector case model
10350-52A0-008 (Sumitomo 3M)

Terminal Block Connector:
Connector socket model
XG4M-5030 (OMRON)
Strain relief model XG4T-5004 (OMRON)

Cable: AWG28 × 25P UL2464

Connector-Terminal Block Conversion Unit

The Connector-Terminal Block Conversion Unit connects the servo drive I/O signals (CN1 connector) for general purpose. Use the cable (XW2Z-□J-B24) to connect the Connector-Terminal Block Conversion Unit to the CN1 connector.

XW2B-50G4 (M3 Screw Terminal Block)

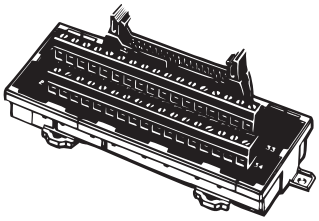

- Dimensions

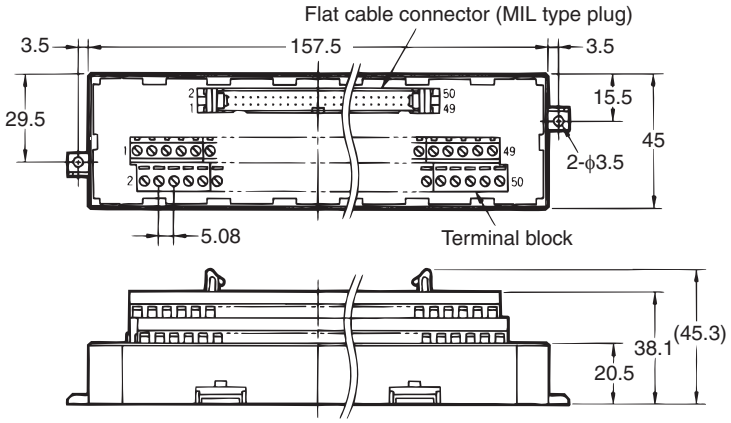

- Use 0.3 to 1.25 mm^2 wire (AWG22 to 16).
- The wire inlet is 1.8 mm (height) × 2.5 mm (width).
- Strip the insulation from the end of the wire for 6 mm as shown below.

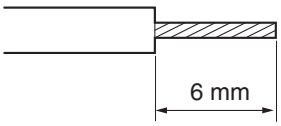

XW2B-50G5 (M3.5 Screw Terminal Block)

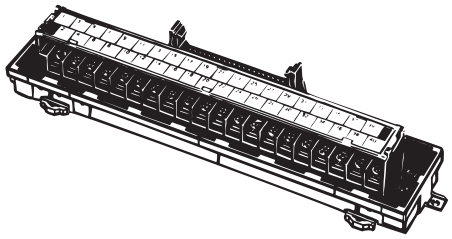

- Dimensions

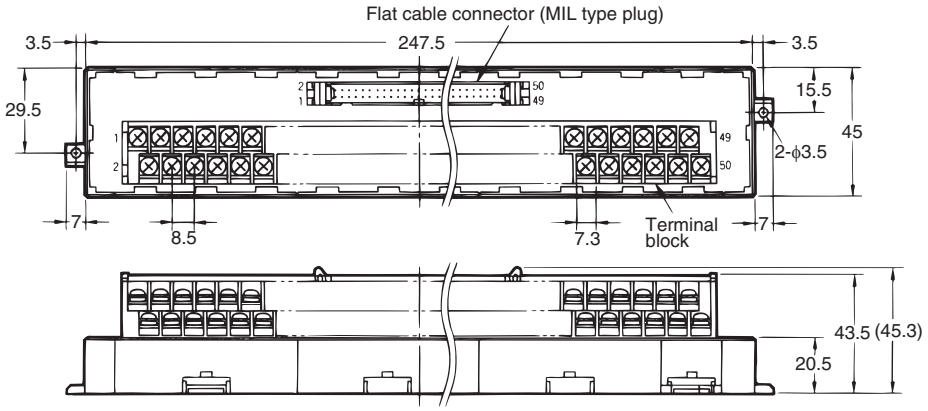

- When using crimp terminals, use crimp terminals with the following dimensions.
- When connecting wires and crimp terminals to a terminal block, tighten them with a tightening torque of 0.59 N•m.

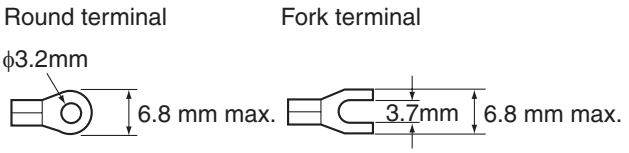

Applicable crimp terminals		Applicable wires
Round terminals	1.25–3	AWG22-16 (0.3 to 1.25 mm^2)
	2–3.5	AWG16-14 (1.25 to 2.0 mm^2)
Fork terminals	1.25Y–3	AWG22-16 (0.3 to 1.25 mm^2)
	2–3.5	AWG16-14 (1.25 to 2.0 mm^2)

XW2D-50G6 (M3 Screw Terminal Block)

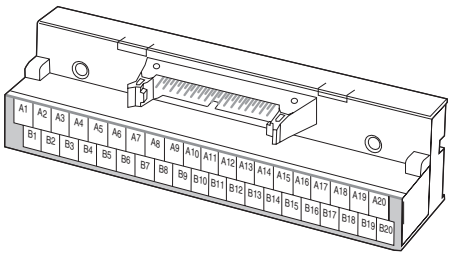

- Dimensions

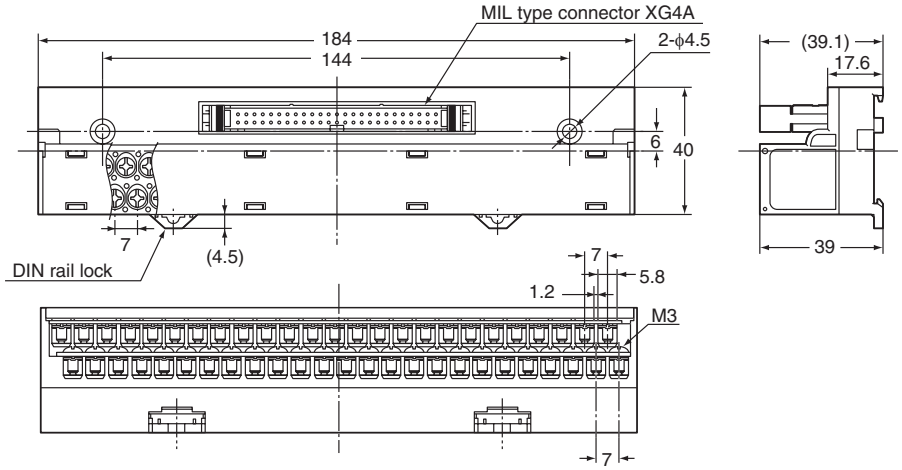

- When using crimp terminals, use crimp terminals with the following dimensions.
- When connecting wires and crimp terminals to a terminal block, tighten them with a tightening torque of 0.7 N•m.

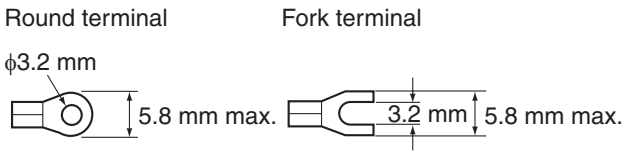

Applicable crimp terminals		Applicable wires
Round terminals	1.25–3	AWG22-16 (0.3 to 1.25 mm^2)
Fork terminals	1.25Y–3	AWG22-16 (0.3 to 1.25 mm^2)

3-5 Servo Relay Units and Cable Specifications

This section provides the specifications for the Servo Relay Unit and cables used for connecting to Position Control Units for OMRON Programmable Controllers (SYSMAC). Select the models that match the Position Control Unit to be used.

Servo Relay Units Specifications

XW2B-20J6-1B

This Servo Relay Unit connects to the following OMRON Position Control Units.

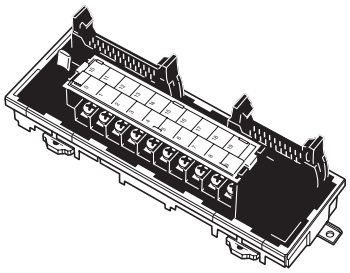

- CJ1W-NC113/-NC133
- CS1W-NC113/-NC133
- C200HW-NC113

Dimensions

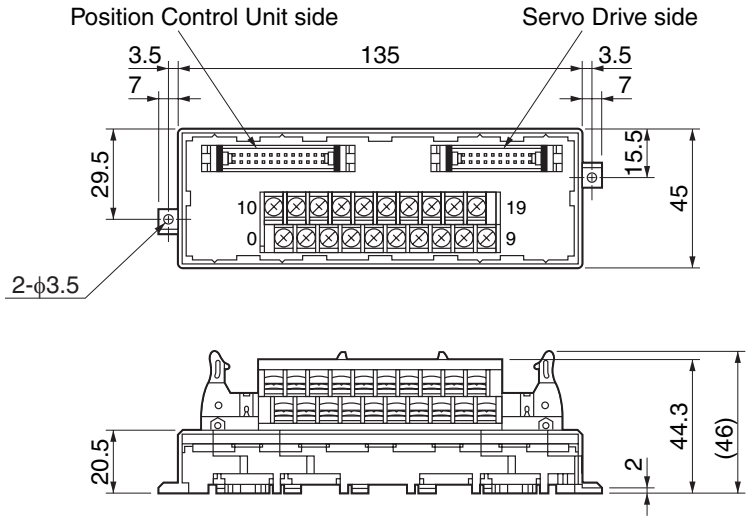

- Terminal block pitch: 7.62 mm

Wiring

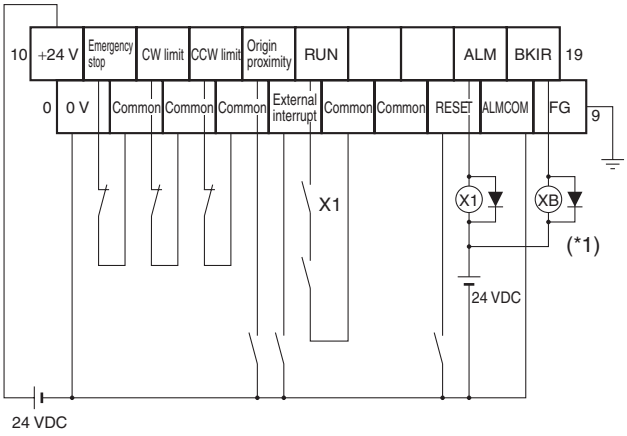

*1. The XB contacts are used to turn ON/OFF the electromagnetic brake.

Note 1.Do not connect unused terminals.

Note 2.The 0 V terminal is internally connected to the common terminals.

Note 3.The applicable crimp terminal is R1.25-3 (round with open end).

XW2B-40J6-2B

This Servo Relay Unit connects to the following OMRON Position Control Units.

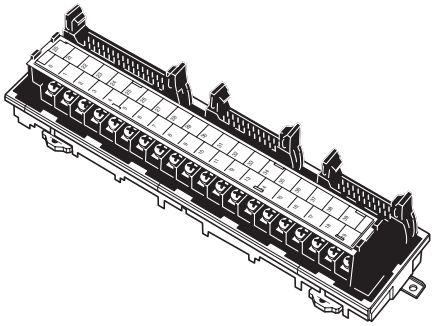

- CJ1W-NC213/-NC233/-NC413/-NC433
- CS1W-NC213/-NC233/-NC413/-NC433
- C200HW-NC213/-NC413

Dimensions

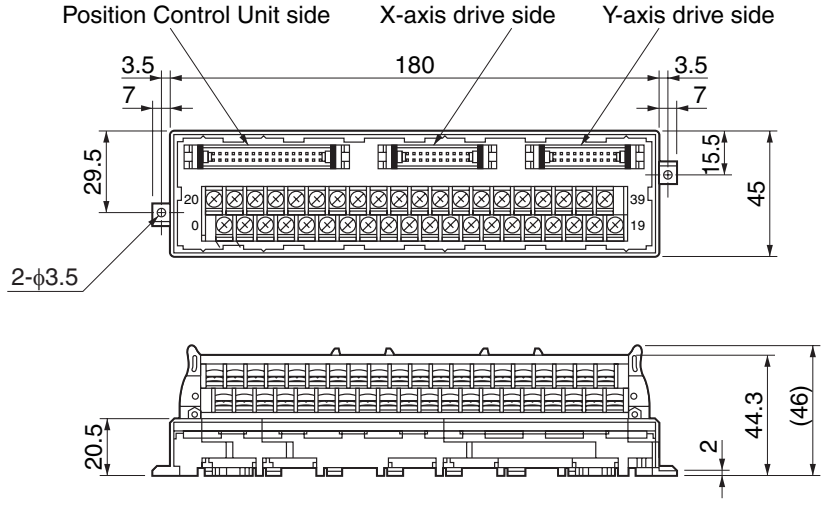

- Terminal block pitch: 7.62 mm

Wiring

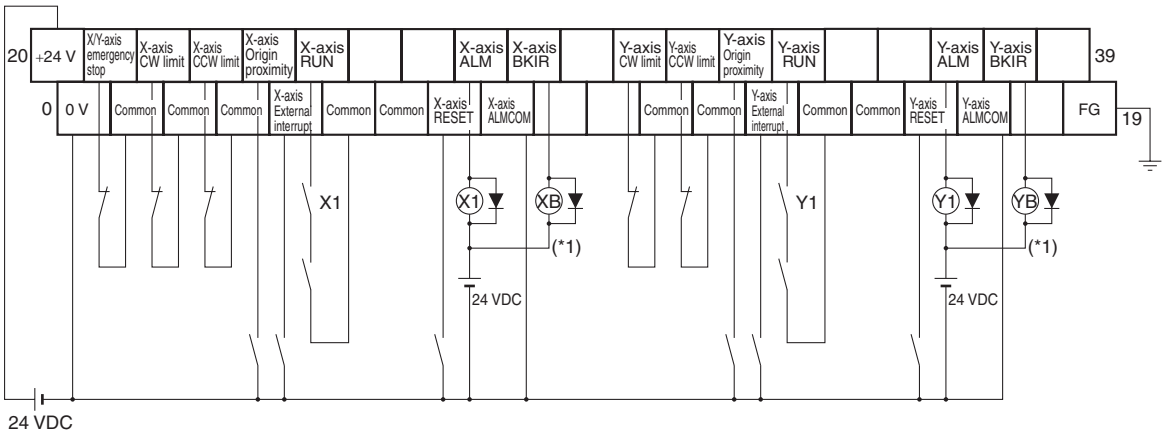

*1. The XB and YB contacts are used to turn ON/OFF the electromagnetic brake.

Note 1.Do not connect unused terminals.

Note 2.The 0 V terminal is internally connected to the common terminals.

Note 3.The applicable crimp terminal is R1.25-3 (round with open end).

XW2B-20J6-3B

This Servo Relay Unit connects to the following OMRON Programmable Controllers.

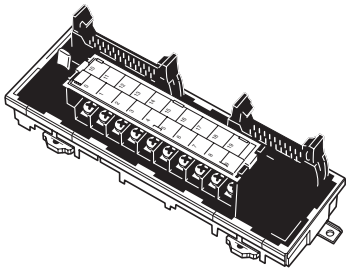

- CQM1-CPU43-V1
- CQM1-PLB21

Dimensions

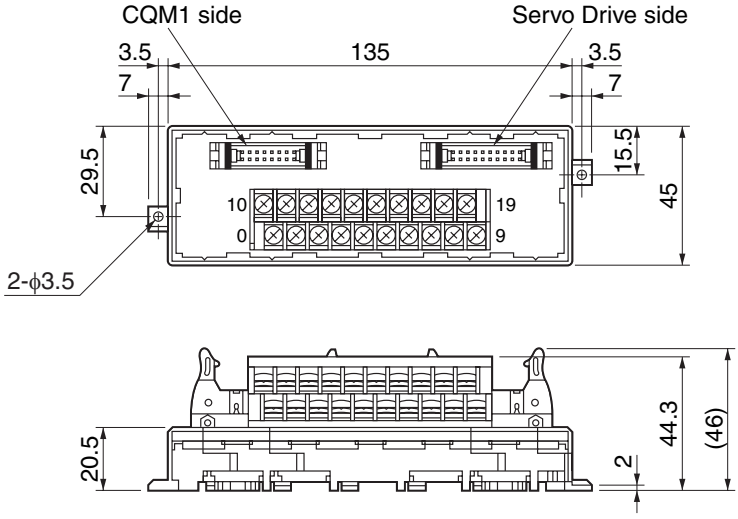

- Terminal block pitch: 7.62 mm

Wiring

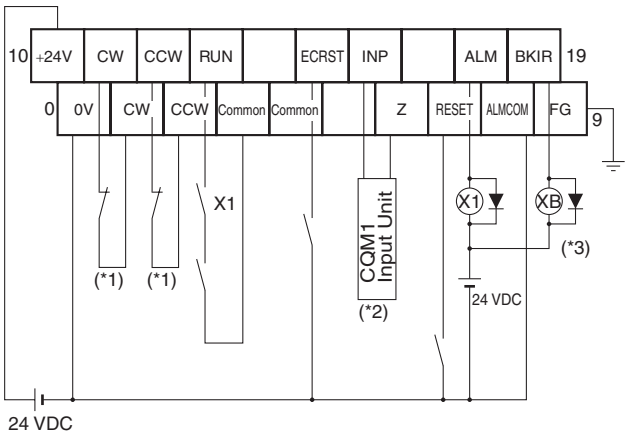

*1. If this signal is input, the output pulse from the CQM1 will be input to the high-speed counter.

*2. Input this output signal to a CQM1 Input Unit.

*3. The XB contacts are used to turn ON/OFF the electromagnetic brake.

Note 1.The phase Z is an open collector.

Note 2.Do not connect unused terminals.

Note 3.The 0 V terminal is internally connected to the common terminals.

Note 4.The applicable crimp terminal is R1.25-3 (round with open end).

XW2B-20J6-8A

This Servo Relay Unit connects to the following OMRON Programmable Controllers.

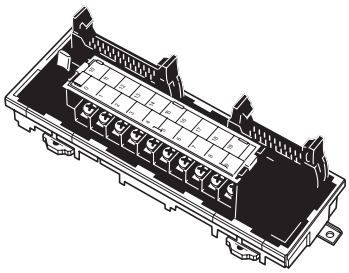

- CJ1M-CPU21/-CPU22/-CPU23 (for 1 axis)

Dimensions

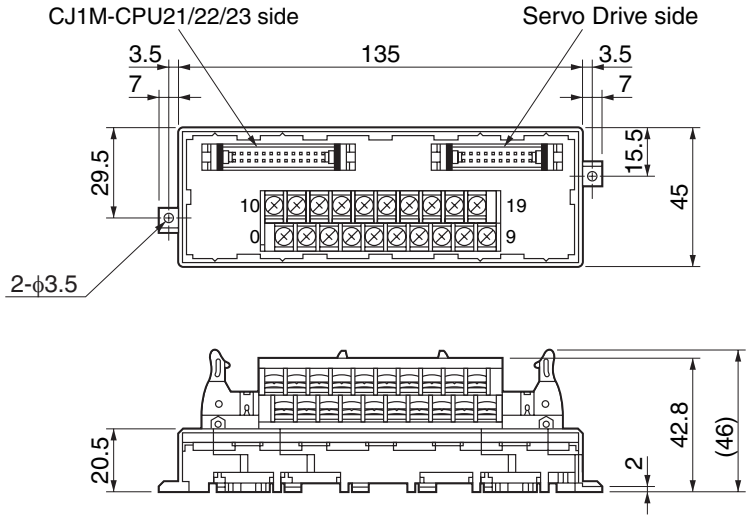

- Terminal block pitch: 7.62 mm

Wiring

The Servo Drive phase Z output signal is wired to the origin signal in this terminal block.

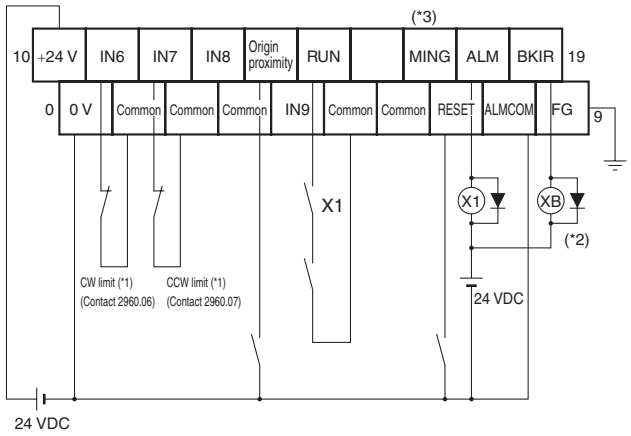

*1. CW and CCW limit input signals can also be input through Input Units. The signal for the CW/CCW limit inputs in the CJ1M are as follows: CW: A540.08, CCW: A540.09 for pulse output 0 and CW: A541.08, CCW: A541.09 for pulse output 1. Accordingly, the actual inputs can be used as the CW/CCW limit by outputting the flags below in the ladder program.

Example)

*2. The XB contacts are used to turn ON/OFF the electromagnetic brake.

*3. Connection to the MING input terminal is disabled.

Note 1.Do not connect unused terminals.

Note 2.The 0 V terminal is internally connected to the common terminals.

Note 3.The applicable crimp terminal is R1.25-3 (round with open end).

XW2B-40J6-9A

This Servo Relay Unit connects to the following OMRON Programmable Controllers.

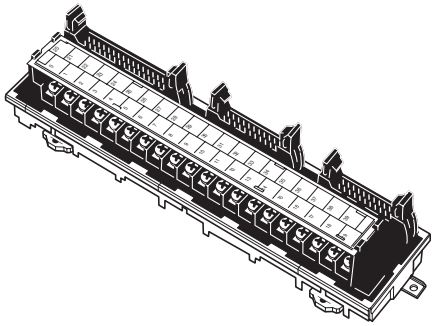

- CJ1M-CPU21/-CPU22/-CPU23 (for 2 axes)

Dimensions

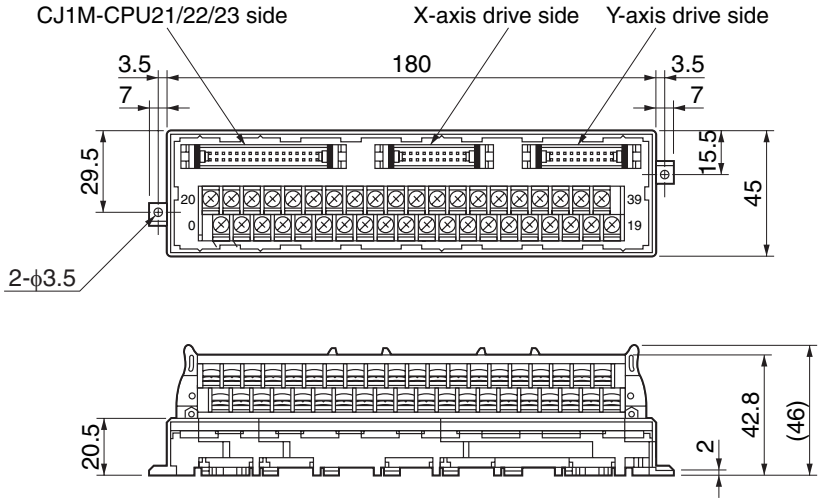

- Terminal block pitch: 7.62 mm

Wiring

The Servo Drive phase Z output signal is wired to the origin signal in this terminal block.

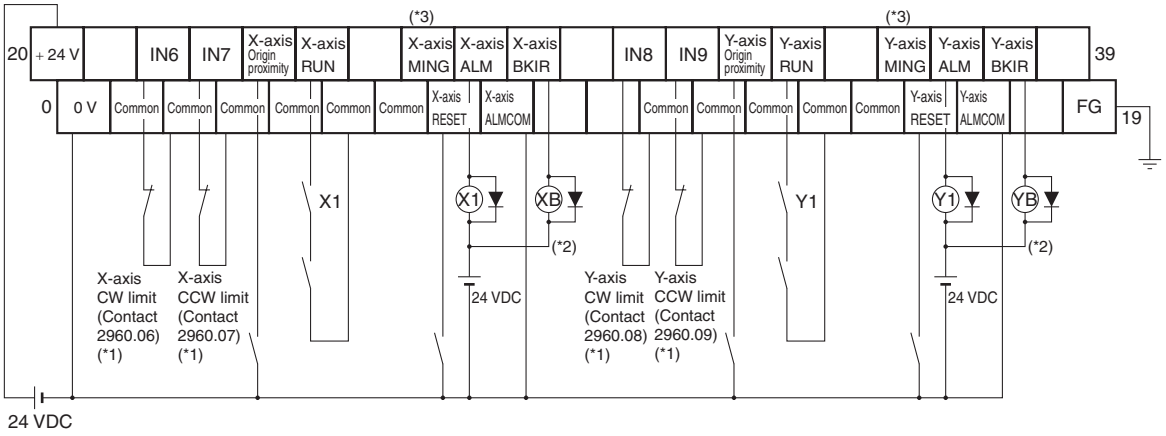

*1. CW and CCW limit input signals can also be input through Input Units. The signal for the CW/CCW limit inputs in the CJ1M are as follows: CW: A540.08, CCW: A540.09 for pulse output 0 and CW: A541.08, CCW: A541.09 for pulse output 1. Accordingly, the actual inputs can be used as the CW/CCW limit by outputting the flags below in the ladder program.

Example)

*2. The XB and YB contacts are used to turn ON/OFF the electromagnetic brake.

*3. Connection to the MING input terminal is disabled.

*4. Do not connect unused terminals.

*5. The 0 V terminal is internally connected to the common terminals.

*6. The applicable crimp terminal is R1.25-3 (round with open end).

Servo Drive Cable (XW2Z-□J-B31)

This cable connects the drive to a Servo Relay Unit (XW2B-20J6-8A, XW2B-40J6-9A).

Cable types

Model	Length (L)	Outer diameter of sheath	Weight
XW2Z-100J-B31	1 m	8.1 dia.	Approx. 0.1 kg
XW2Z-200J-B31	2 m		Approx. 0.2 kg

Connection configuration and external dimensions

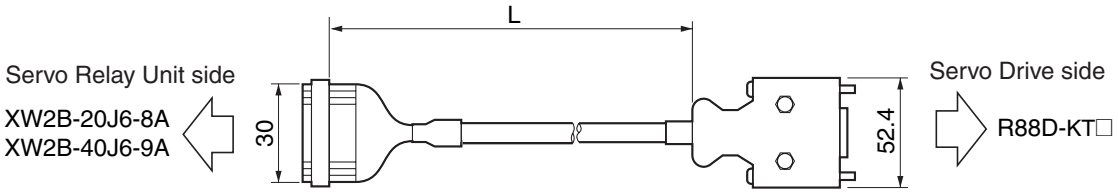

Wiring

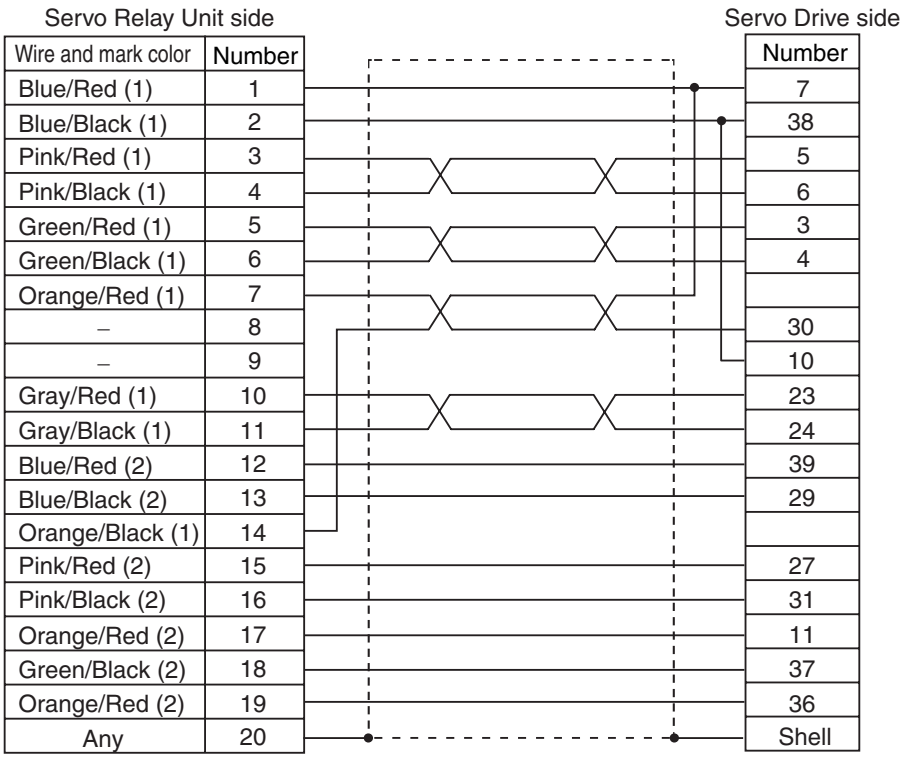

Wire and mark color	Number	Number
Blue/Red (1)	1	7
Blue/Black (1)	2	38
Pink/Red (1)	3	5
Pink/Black (1)	4	6
Green/Red (1)	5	3
Green/Black (1)	6	4
Orange/Red (1)	7	
–	8	30
–	9	10
Gray/Red (1)	10	23
Gray/Black (1)	11	24
Blue/Red (2)	12	39
Blue/Black (2)	13	29
Orange/Black (1)	14	
Pink/Red (2)	15	27
Pink/Black (2)	16	31
Orange/Red (2)	17	11
Green/Black (2)	18	37
Orange/Red (2)	19	36
Any	20	Shell

[Servo Relay Unit connector]
Connector socket model: XG4M-2030
Strain relief model: XG4T-2004
[Cable]
AWG28 × 10P UL2464
[Drive connector]
Connector plug model: 10150-3000PE (Sumitomo 3M)
Connector case model: 10350-52A0-008 (Sumitomo 3M)

Position Control Unit-Servo Relay Unit Cable Specifications

Position Control Unit Cable (XW2Z-□J-A3)

This cable connects a Programmable Controller (CQM1H-PLB21) to a Servo Relay Unit (XW2B-20J6-3B).

Cable types

Model	Length (L)	Outer diameter of sheath	Weight
XW2Z-050J-A3	50 cm	7.5 dia.	Approx. 0.1 kg
XW2Z-100J-A3	1 m		Approx. 0.1 kg

Connection configuration and external dimensions

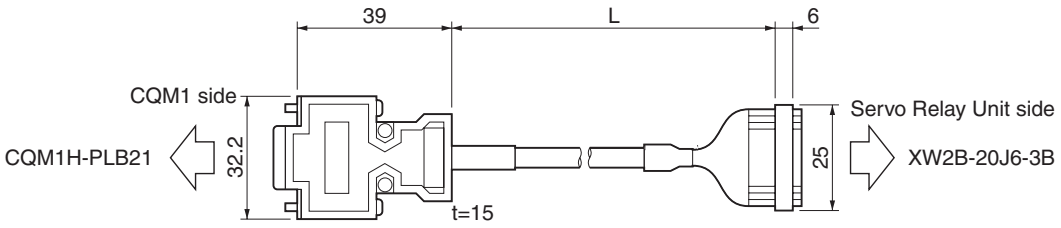

Wiring

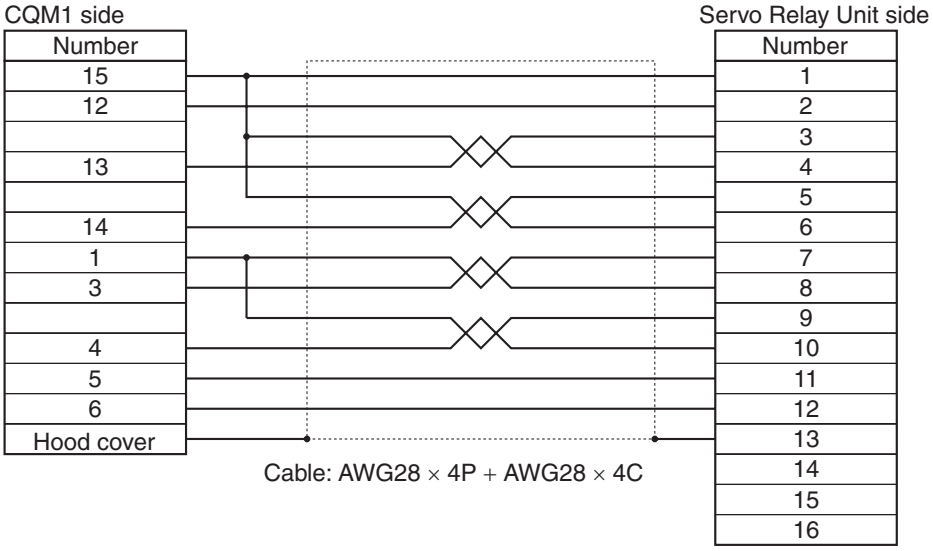

Position Control Unit Cable (XW2Z-□J-A6)

This cable connects a Position Control Unit (CS1W-NC113 and C200HW-NC113) to a Servo Relay Unit (XW2B-20J6-1B).

Cable types

Model	Length (L)	Outer diameter of sheath	Weight
XW2Z-050J-A6	50 cm	8.0 dia.	Approx. 0.1 kg
XW2Z-100J-A6	1 m		Approx. 0.1 kg

Connection configuration and external dimensions

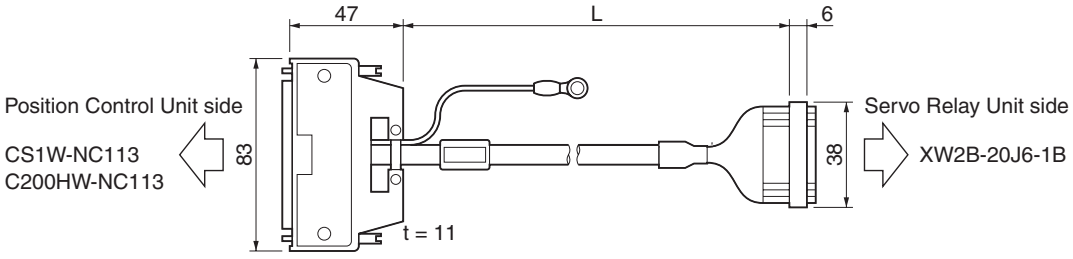

Wiring

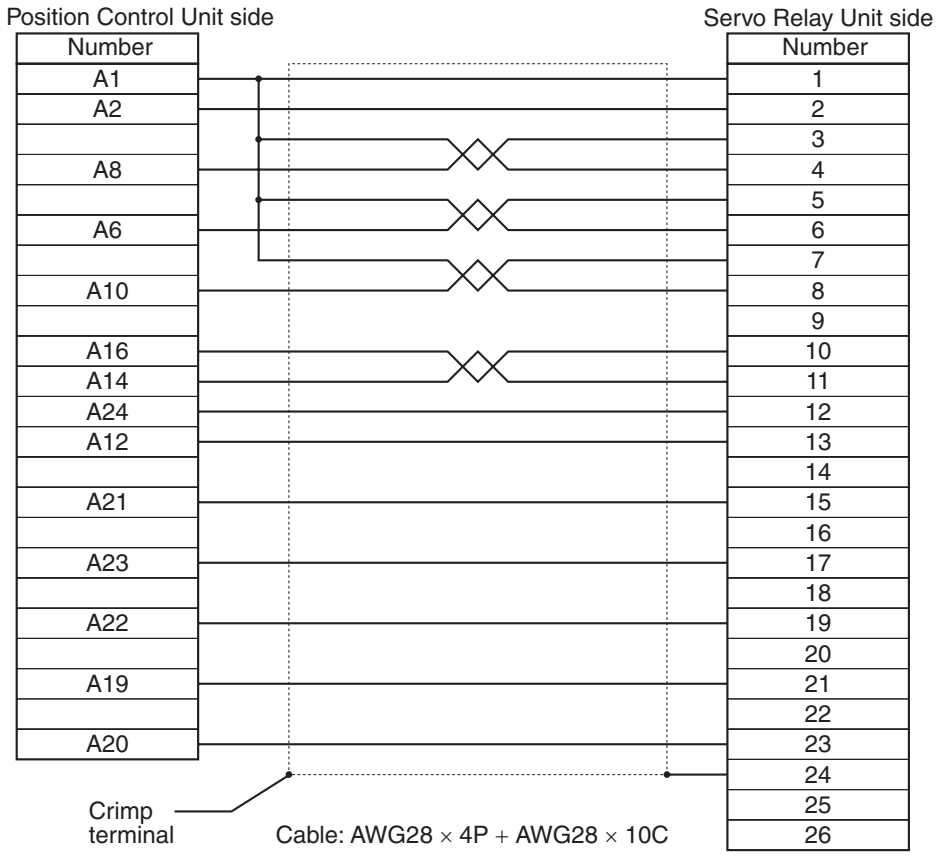

Position Control Unit Cable (XW2Z-□J-A7)

This cable connects a Position Control Unit (CS1W-NC213/NC413 and C200HW-NC213/NC413) to a Servo Relay Unit (XW2B-40J6-2B).

Cable types

Model	Length (L)	Outer diameter of sheath	Weight
XW2Z-050J-A7	50 cm	10.0 dia.	Approx. 0.1 kg
XW2Z-100J-A7	1 m		Approx. 0.2 kg

Connection configuration and external dimensions

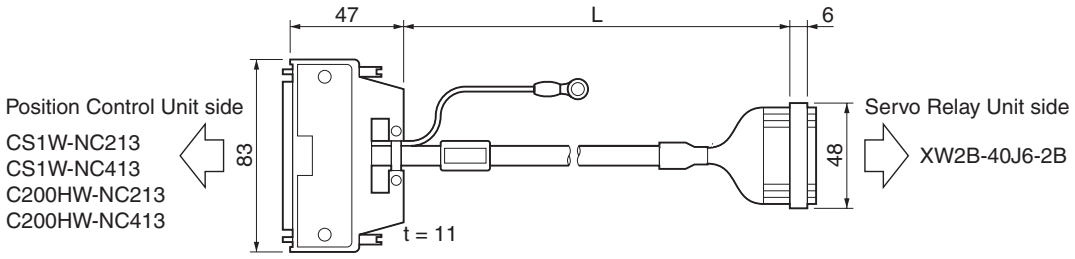

Wiring

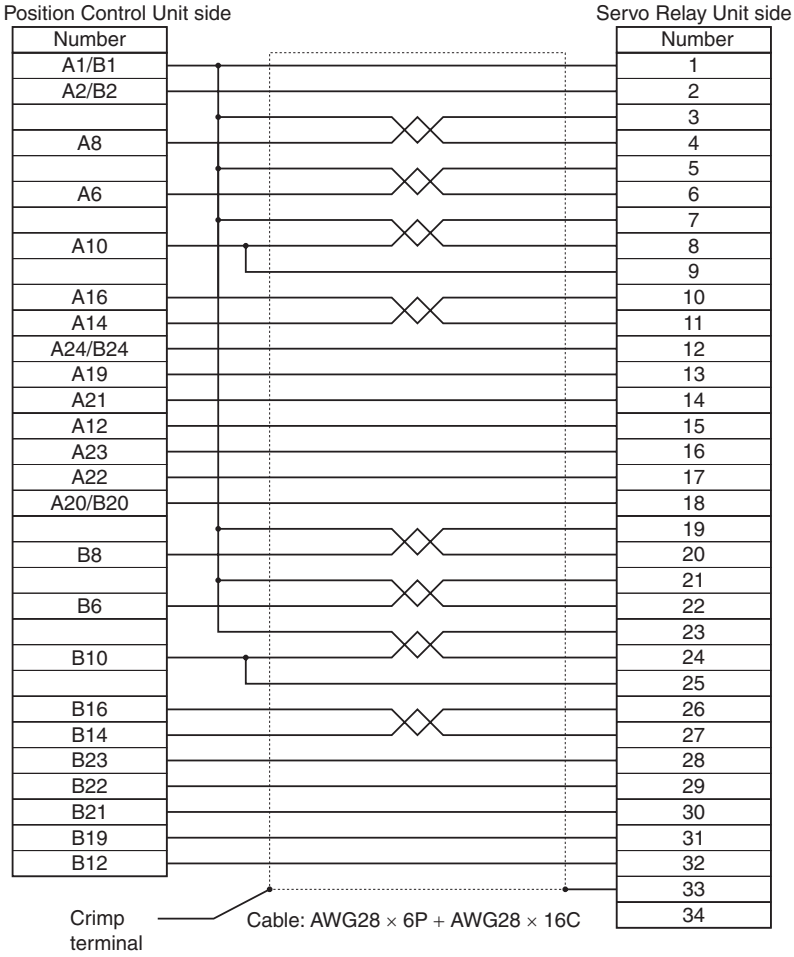

Position Control Unit Cable (XW2Z-□J-A10)

This cable connects a Position Control Unit (CS1W-NC133) to a Servo Relay Unit (XW2B-20J6-1B).

Cable types

Model	Length (L)	Outer diameter of sheath	Weight
XW2Z-050J-A10	50 cm	10.0 dia.	Approx. 0.1 kg
XW2Z-100J-A10	1 m		Approx. 0.2 kg

Connection configuration and external dimensions

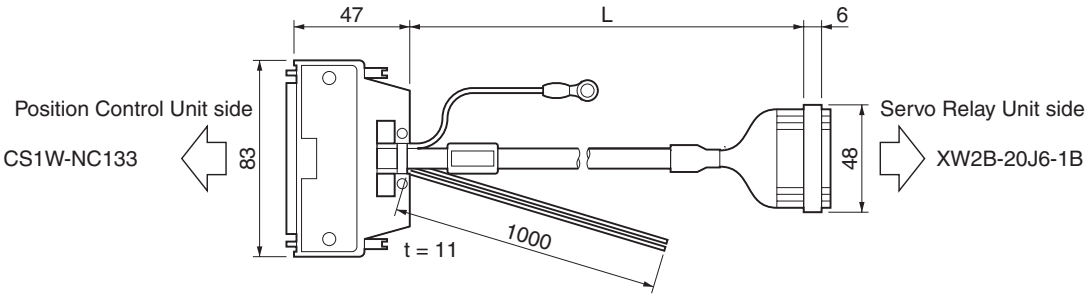

Wiring

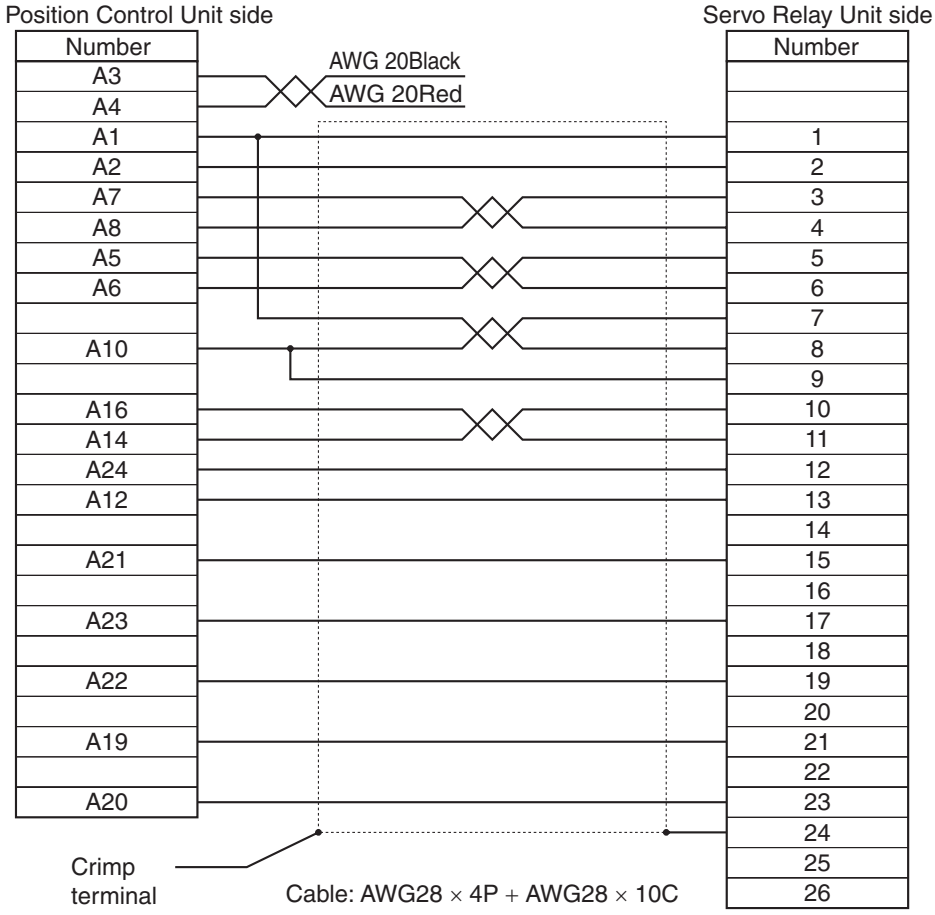

Position Control Unit Cable (XW2Z-□J-A11)

This cable connects a Position Control Unit (CS1W-NC233/433) to a Servo Relay Unit (XW2B-40J6-1B).

Cable types

Model	Length (L)	Outer diameter of sheath	Weight
XW2Z-050J-A11	50 cm	10.0 dia.	Approx. 0.1 kg
XW2Z-100J-A11	1 m		Approx. 0.2 kg

Connection configuration and external dimensions

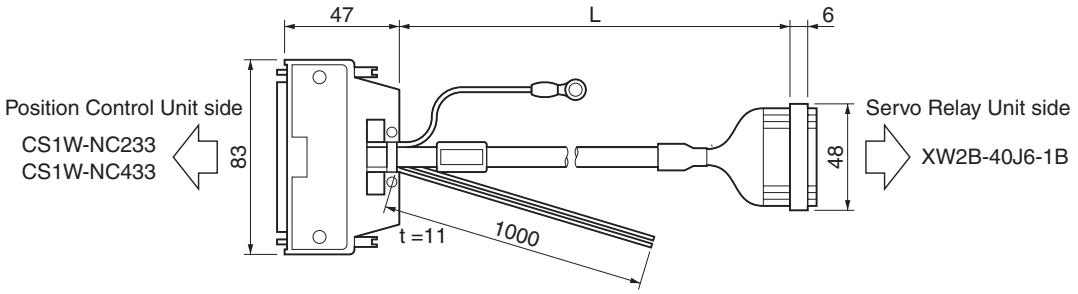

Wiring

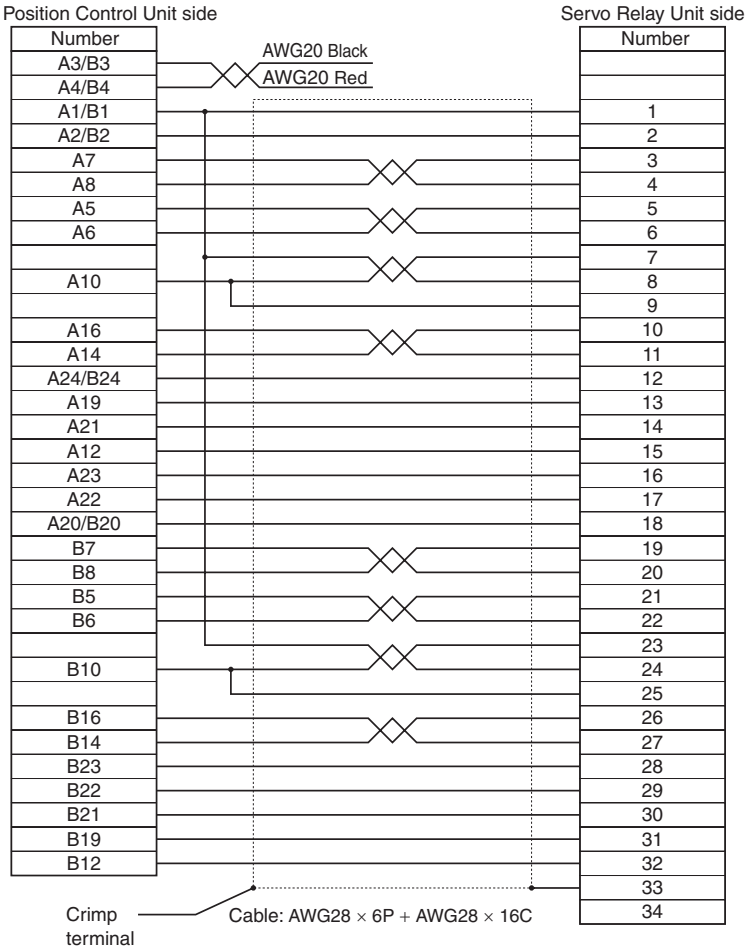

Position Control Unit Cable (XW2Z-□J-A14)

This cable connects a Position Control Unit (CJ1W-NC113) to a Servo Relay Unit (XW2B-20J6-1B).

Cable types

Model	Length (L)	Outer diameter of sheath	Weight
XW2Z-050J-A14	50 cm	10.0 dia.	Approx. 0.1 kg
XW2Z-100J-A14	1 m		Approx. 0.2 kg

Connection configuration and external dimensions

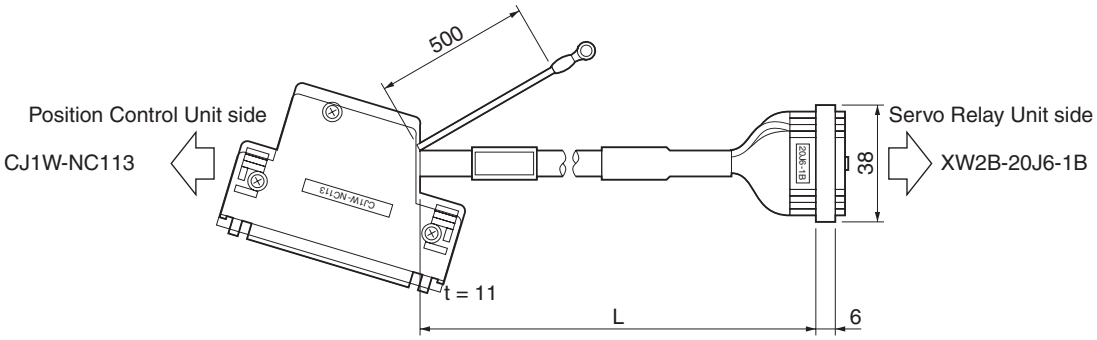

Wiring

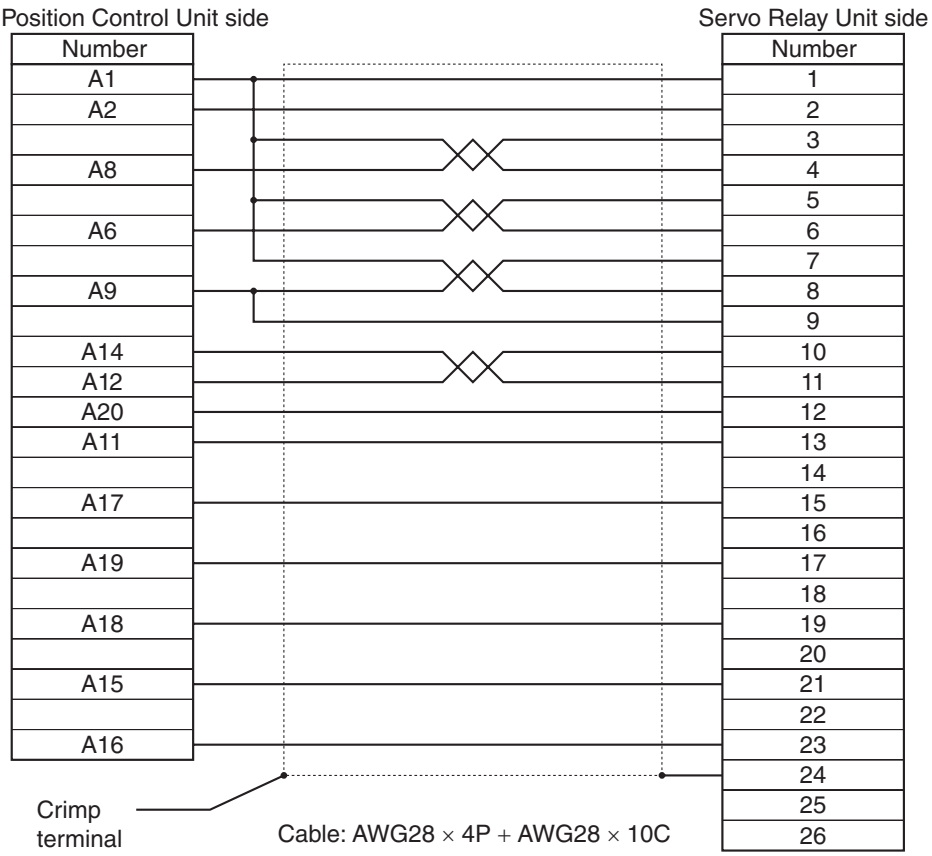

Position Control Unit Cable (XW2Z-□J-A15)

This cable connects a Position Control Unit (CJ1W-NC213/NC413) to a Servo Relay Unit (XW2B-40J6-2B).

Cable types

Model	Length (L)	Outer diameter of sheath	Weight
XW2Z-050J-A15	50 cm	10.0 dia.	Approx. 0.1 kg
XW2Z-100J-A15	1 m		Approx. 0.2 kg

Connection configuration and external dimensions

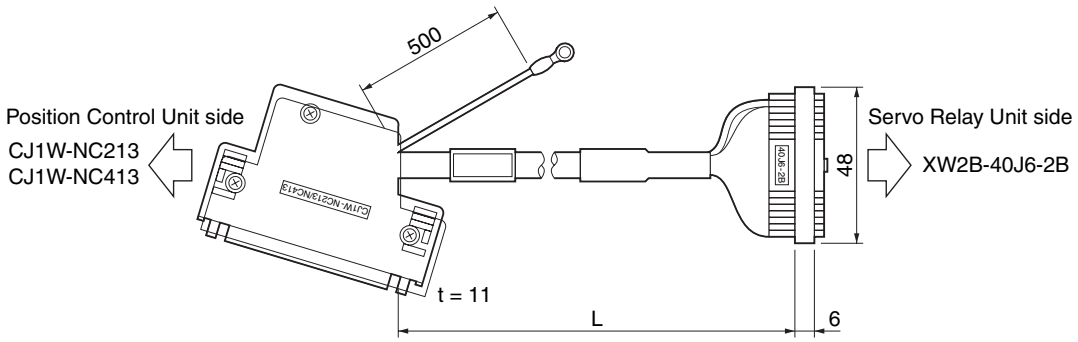

Wiring

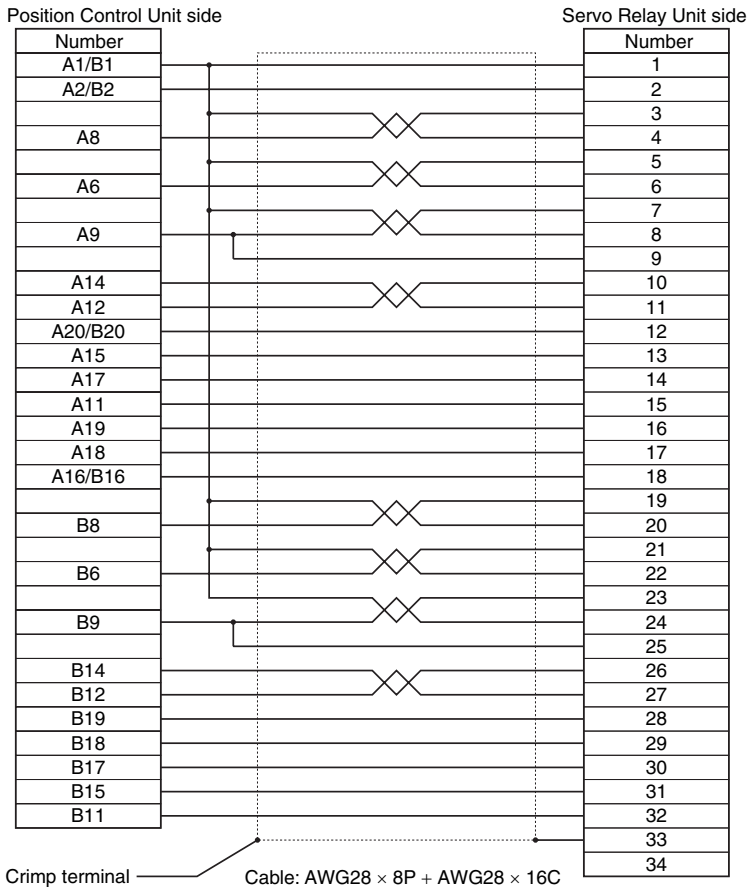

Position Control Unit Cable (XW2Z-□J-A18)

This cable connects a Position Control Unit (CJ1W-NC133) to a Servo Relay Unit (XW2B-20J6-1B).

Cable types

Model	Length (L)	Outer diameter of sheath	Weight
XW2Z-050J-A18	50 cm	10.0 dia.	Approx. 0.1 kg
XW2Z-100J-A18	1 m		Approx. 0.2 kg

Connection configuration and external dimensions

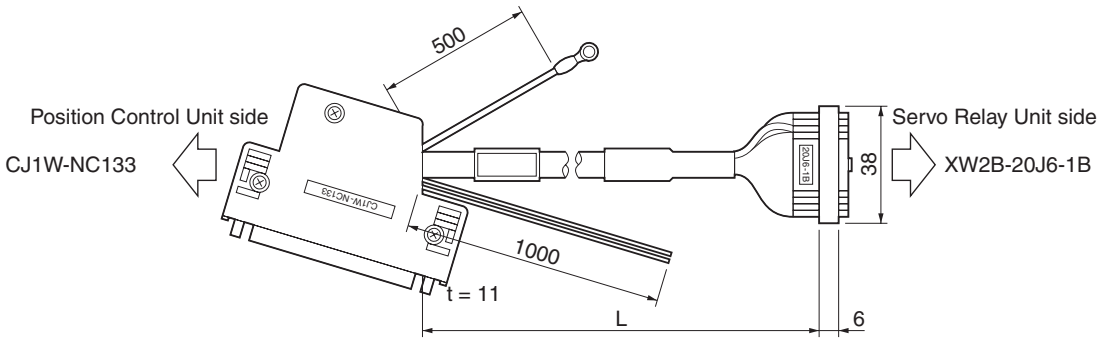

Wiring

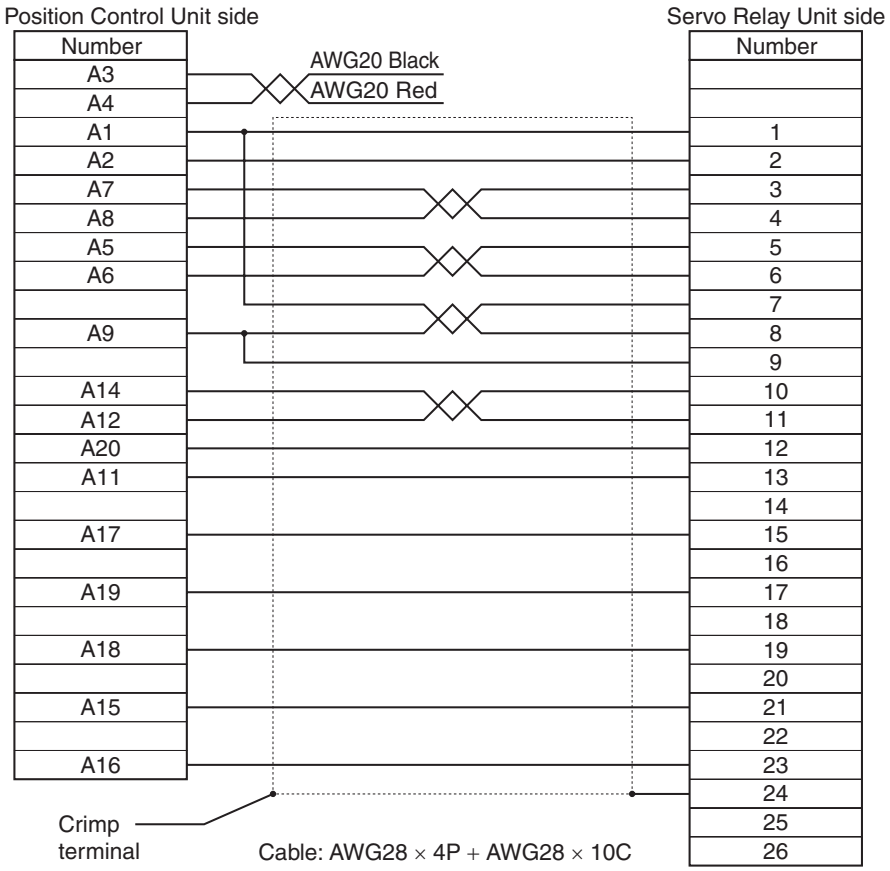

Position Control Unit Cable (XW2Z-□J-A19)

This cable connects a Position Control Unit (CJ1W-NC233/433) to a Servo Relay Unit (XW2B-40J6-2B).

Cable types

Model	Length (L)	Outer diameter of sheath	Weight
XW2Z-050J-A19	50 cm	10.0 dia.	Approx. 0.1 kg
XW2Z-100J-A19	1 m		Approx. 0.2 kg

Connection configuration and external dimensions

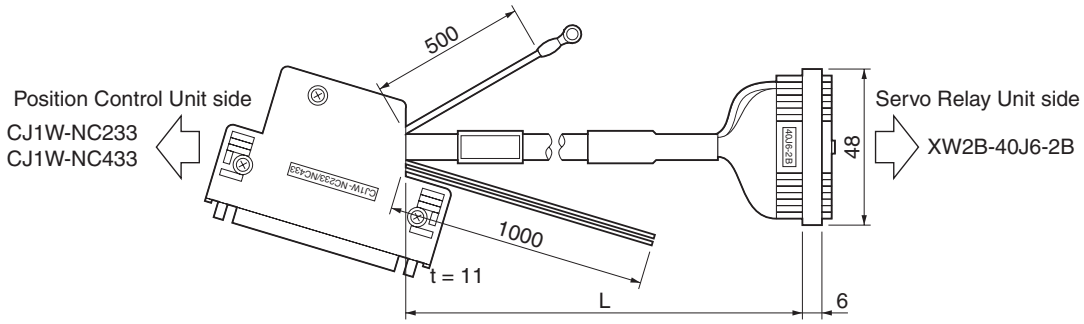

Wiring

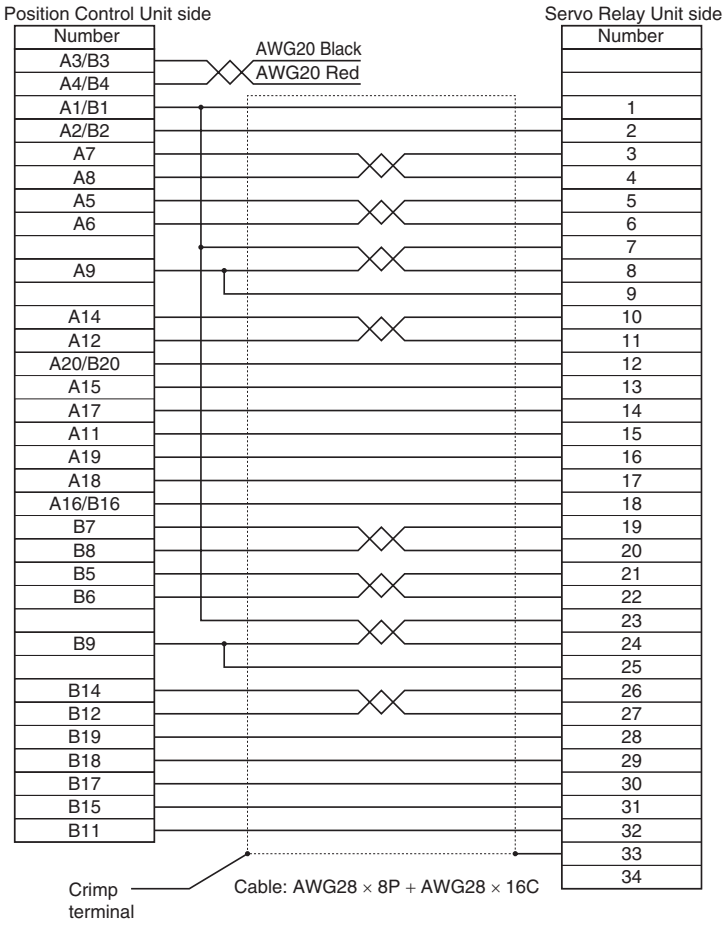

Position Control Unit Cable (XW2Z-□J-A33)

This cable connects a Programmable Controller (CJ1M-CPU21/CPU22/CPU23) to a Servo Relay Unit (XW2B-20J6-8A or XW2B-40J6-9A).

Cable types

Model	Length (L)	Outer diameter of sheath	Weight
XW2Z-050J-A33	50 cm	10.0 dia.	Approx. 0.1 kg
XW2Z-100J-A33	1 m		Approx. 0.2 kg

Connection configuration and external dimensions

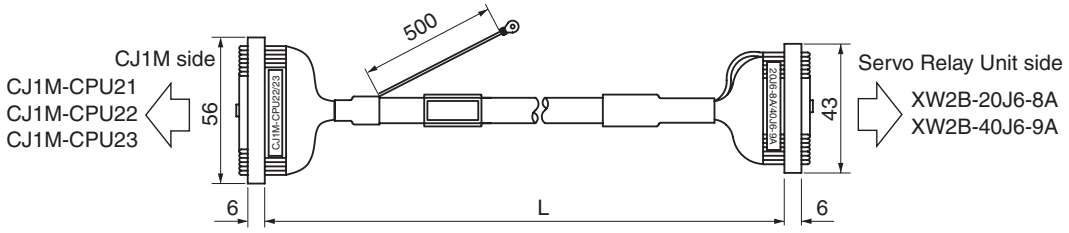

Wiring

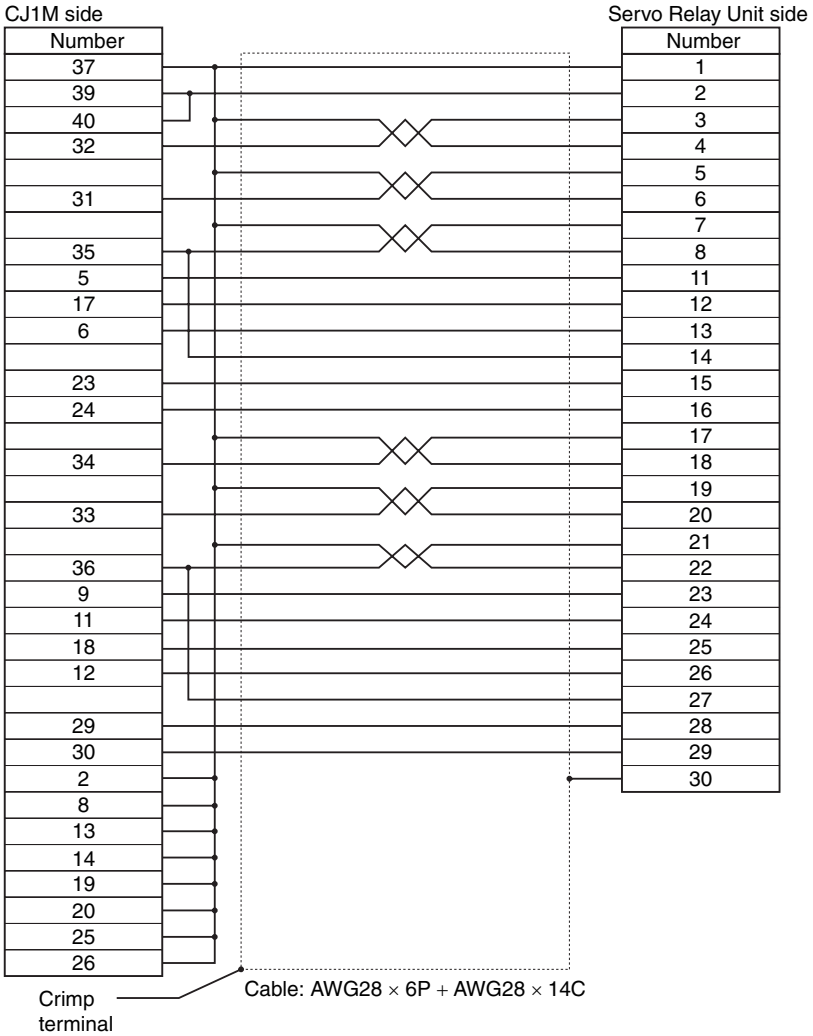

3-6 External Regeneration Resistor Specifications

External Regeneration Resistor Specifications

R88A-RR08050S

Model	Resistance value	Nominal capacity	Regeneration absorption for 120°C temperature rise	Heat radiation condition	Thermal switch output specifications
R88A-RR08050S	50 Ω	80 W	20 W	Aluminum 250 × 250, Thickness: 3.0	Operating temperature 150°C ± 5% NC contact Rated output: 30 VDC, 50 mA max.

R88A-RR080100S

Model	Resistance value	Nominal capacity	Regeneration absorption for 120°C temperature rise	Heat radiation condition	Thermal switch output specifications
R88A-RR080100S	100 Ω	80 W	20 W	Aluminum 250 × 250, Thickness: 3.0	Operating temperature 150°C ± 5% NC contact Rated output: 30 VDC, 50 mA max.

R88A-RR22047S

Model	Resistance value	Nominal capacity	Regeneration absorption for 120°C temperature rise	Heat radiation condition	Thermal switch output specifications
R88A-RR22047S	47 Ω	220 W	70 W	Aluminum 350 × 350, Thickness: 3.0	Operating temperature: 170°C ± 7°C NC contact Rated output: 250 VAC, 0.2 A max.

R88A-RR22047S1

Model	Resistance value	Nominal capacity	Regeneration absorption for 120°C temperature rise	Heat radiation condition	Thermal switch output specifications
R88A-RR22047S1	47 Ω	220 W	70 W	Aluminum 350 × 350, Thickness: 3.0	Operating temperature: 150°C ± 5% NC contact Rated output (resistive load) 250 VAC, 0.2 A max. 10 VDC, 0.2 A max. (minimum current: 1 mA)

R88A-RR50020S

Model	Resistance value	Nominal capacity	Regeneration absorption for 120°C temperature rise	Heat radiation condition	Thermal switch output specifications
R88A-RR50020S	20 Ω	500 W	180 W	Aluminum 600 × 600, Thickness: 3.0	Operating temperature 200°C ± 7°C NC contact Rated output: 250 VAC, 0.2 A max. 24 VDC, 0.2 A max.

3-7 EMC Filter Specifications

Specifications

Applicable servo drive	Filter model	Rated current	Leakage current	Rated voltage
R88D-KT01H	R88A-FIK102-RE	2.4 A	3.5 mA	250 VAC single-phase
R88D-KT02H				
R88D-KT04H	R88A-FIK104-RE	4.1 A		
R88D-KT08H	R88A-FIK107-RE	6.6 A		
R88D-KT10H	R88A-FIK114-RE	14.2 A		
R88D-KT15H				
R88D-KT06F	R88A-FIK304-RE	4 A		400 VAC single-phase
R88D-KT10F				
R88D-KT15F				
R88D-KT20F	R88A-FIK306-RE	6 A		
R88D-KT30F	R88A-FIK312-RE	12 A		
R88D-KT50F				

4

System Design

This chapter explains the installation conditions for the Servo Drive and Servomotor, wiring methods including wiring conforming to EMC Directives and regenerative energy calculation methods as well as the performance of External Regeneration Resistors.

4-1 Installation Conditions 4-1
Space Conditions around Servo Drives 4-1
Servomotor Installation Conditions 4-3
Decelerator Installation Conditions 4-6
4-2 Wiring 4-7
Peripheral Equipment Connection Examples 4-7
Main Circuit and Motor Connections 4-13
4-3 Wiring Conforming to EMC Directives 4-21
Wiring Method 4-21
Selecting Connection Component 4-25
4-4 Regenerative Energy Absorption 4-35
Calculating the Regenerative Energy 4-35
Servo Drive Regeneration Absorption Capacity 4-37
Regenerative Energy Absorption with an External Regeneration Resistor 4-38
Connecting an External Regeneration Resistor 4-39

4-1 Installation Conditions

Space Conditions around Servo Drives

Space Conditions around Equipment

- Install Servo Drives according to the dimensions shown in the following illustration to ensure proper dispersion of heat from inside the drive and convection inside the panel. If the drives are installed side by side, install a fan for air circulation to prevent uneven temperatures inside the panel.

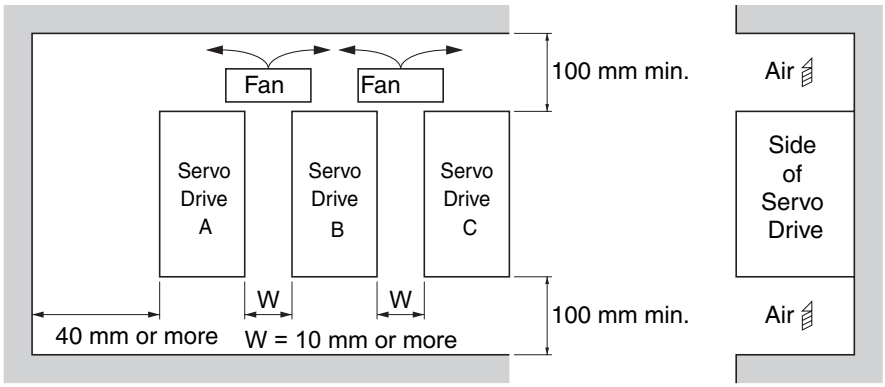

- The 100-V and 200-V Servo Drives for 750 W or less can be installed with W=1mm derating. The conditions for installation change with the installation position (Servo Drive A, B, or C).
  Servo Drive A: 0 to 50 °C
  Servo Drive B: 0 to 40 °C
  Servo Drive C: 0 to 45 °C

Mounting Direction

- Mount the Servo Drive perpendicular on the panel so that the model number reads normally.

Environment Operating Conditions

- The environment in which drives are operated must meet the following conditions. Drives may malfunction if operated under any other conditions.
  Operating ambient temperature: 0 to +55°C (Take into account temperature rises in the following individual drives themselves.)
  Operating humidity: 90% RH max. (with no condensation)
  Operating atmosphere: No corrosive gases.
  Altitude: 1,000 m max.
- Drives of 100 V or 200 V with a capacity of 750 W max. can be installed side by side with a 1-mm clearance (W in above illustration). The ambient temperature requirement will depend on the location of the Servo Drive.
  Servo Drive A: 0 to 50 °C
  Servo Drive B: 0 to 40 °C
  Servo Drive C: 0 to 45 °C

Ambient Temperature Control

- Operation in an environment in which there is minimal temperature rise is recommended to maintain a high level of reliability.
- When the drive is installed in a closed space, such as a box, the ambient temperature may rise

due to temperature rise in each unit. Use a fan or air conditioner to prevent the Servo Drive's ambient temperature from exceeding 55°C.

- Drive surface temperatures may rise to as much as 30°C above the ambient temperature. Use heat-resistant materials for wiring, and provide a distance from any devices or wiring that are sensitive to heat.
- The service life of a Servo Drive is largely determined by the ambient temperature around the internal electrolytic capacitors. When an electrolytic capacitor reaches its limit, electrostatic capacity drops and internal resistance increases. This leads to overvoltage alarms, malfunctioning due to noise, and damage to individual elements.
- If a drive is always operated at the ambient temperature of 55°C and with a 100% output of the rated torque and rated rotation speed, its life is expected to be approx. 28,000 hours (excluding the axial-flow fan). A drop of 10°C in the ambient temperature will double the expected life for drive.

$$\text{Lifetime } 25°C = \text{Lifetime } 55°C \times 2^{\frac{55-25}{10}} = 224000 \text{ hour}$$

Keeping Foreign Objects Out of Units

- Place a cover over the drive or take other preventative measures to prevent foreign objects, such as drill filings, from getting into the drive during installation. Be sure to remove the cover after installation is complete. If the cover is left on during operation, drive's heat dissipation is blocked, which may result in malfunction.
- Take measures during installation and operation to prevent foreign objects such as metal particles, oil, machining oil, dust, or water from getting inside of the drives.

Servomotor Installation Conditions

Environment Operating Conditions

- The environment in which the motor is operated must meet the following conditions. Operating the motor outside of the following ranges may result in malfunction of the motor.
  Operating ambient temperature: 0 to +40°C*1
  Operating humidity: 85% RH max. (with no condensation)
  Operating atmosphere: No corrosive gases.
  *1. The ambient operating temperature is the temperature at a point 5 cm from the motor.

Impact and Load

- The motor is resistant to impacts of up to 98 m/s^2. Do not apply heavy impacts or loads during transport, installation, or removal of the motor.
- When transporting the motor, hold the motor body itself. And do not hold the encoder, cable, or connector areas. Failure to follow this guideline may result in damaging the motor.
- Always use a pulley remover to remove pulleys, couplings, or other objects from the shaft.
- After assembly, secure cables so that there is no impact or load placed on the cable outlet.

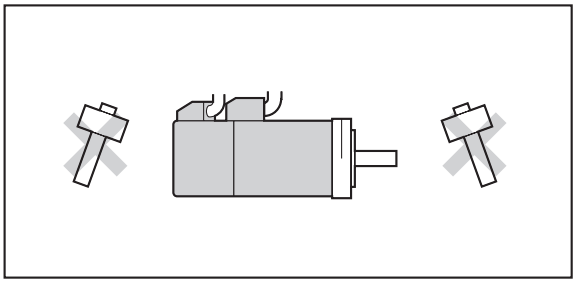

Connecting to Mechanical Systems

- For the allowable axial loads for motors, refer to "Characteristics"(P.3-2). If an axial load greater than that specified is applied to a motor, it may reduce the limit of the motor bearings and may break the motor shaft.
- When connecting to a load, use couplings that can sufficiently absorb mechanical eccentricity and declination.
- For spur gears, an extremely large radial load may be applied depending on the gear precision. Use spur gears with a high degree of precision (for example, JIS class 2: normal line pitch error of 6 μm max. for a pitch circle diameter of 50 mm).
- If the gear precision is not adequate, allow backlash to ensure that no radial load is placed on the motor shaft.
- When using bevel gears, a load is applied in the thrust direction depending on the structural precision, the gear precision, and temperature changes. Provide appropriate backlash or take other measures to ensure that a thrust load larger than the specified level is not applied.
- Do not put rubber packing on the flange surface. If the flange is mounted with rubber packing, the motor flange may crack under the tightening force.

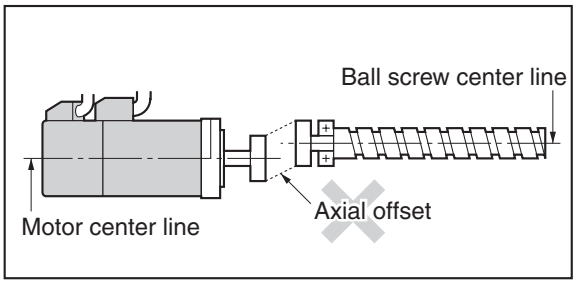

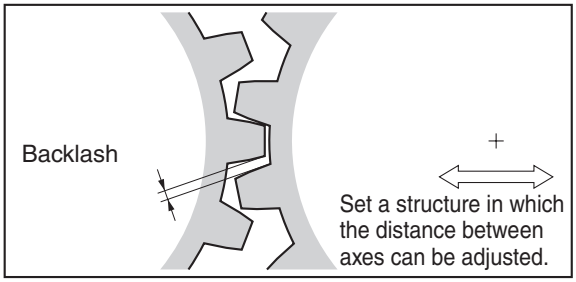

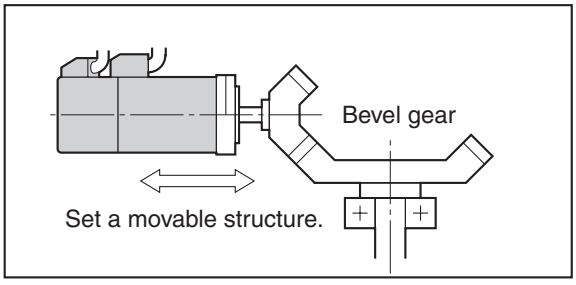

- When connecting to a V-belt or timing belt, consult the manufacturer for belt selection and tension.
- A radial load twice as large as the belt tension will be placed on the motor shaft. Do not allow a load that exceeds the allowable radial load to be placed on the motor shaft. If an excessive radial load is applied, the motor shaft and bearings may be damaged.
- Set up a movable pulley in the middle of the motor shaft and the load shaft so that the belt tension can be adjusted.

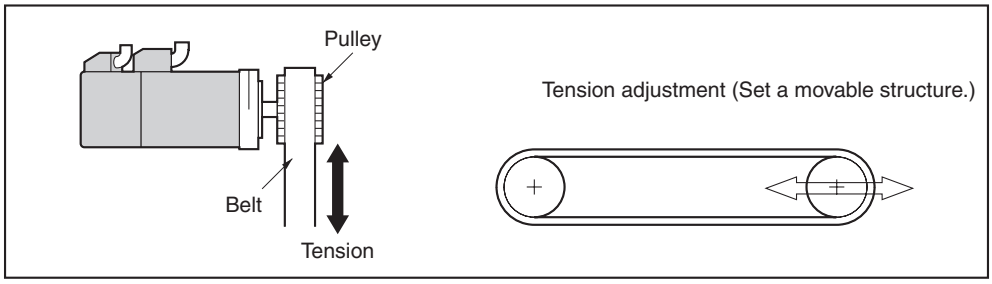

Water and Drip Resistance

- The protective structure for the motors is as follows:
  Equivalent to IP67 (except for through-shaft parts)

Oil-water Measures

Use the Servomotor with an oil seal if you are using it in an environment where oil drops can adhere to the through-shaft part. The operating conditions of the Servomotor with an oil seal are as follows:

- Keep the oil level below the lip of the oil seal.
- Prepare a good lubricated condition under which only oil droplets splash on the oil seal.
- If you are using the Servomotor with the shaft in upward direction, make sure that no oil accumulates on the lip of the oil seal.

Radiator Plate Installation Conditions

- When you mount a Servomotor onto a small device, be sure to provide enough radiation space on the mounting area. Otherwise the Servomotor temperature rises too high. One of the preventive measures is to install a radiator plate between the motor attachment area and the motor flange. (Refer to the following figure.) If a radiator plate cannot be connected, the Servomotor may be damaged by an excessive rise in temperature. Refer to the "Servomotor Specifications"(P.3-54) for the radiator plate specifications.

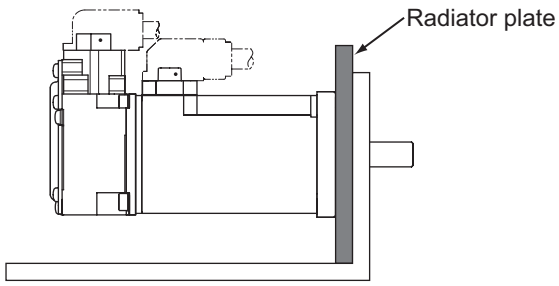

- The temperature rise depends on the mounting part materials and the installation environment. Check the actual temperature rise by using a real Servomotor.

- Depending on the environment, such as when the Servomotor is installed near a heating element, the Servomotor temperature may rise significantly. In this case, take any of the following measures.

  Lower the load ratio.
  Review the heat radiation conditions of the Servomotor.
  Install a cooling fan and apply forced air cooling to the Servomotor.

Other Precautions

- Take measures to protect the motor shaft from corrosion. The motor shaft is coated with anti-corrosion oil when shipped, but anti-corrosion oil or grease should also be applied when connecting the components that apply load to the shaft.

⚠ Caution

Do not apply a commercial power supply directly to the motor. Failure may result.

Never repair the Servo Drive by disassembling it. Electric shock or injury may result.

Decelerator Installation Conditions

Using Another Company's Decelerator (Reference)

If the system configuration requires another company's decelerator to be used in combination with an OMNUC G5-Series motor, select the decelerator so that the load on the motor shaft (i.e., both the radial and thrust loads) is within the allowable range. (Refer to "Characteristics"(P.3-2) for details on the allowable loads for the motors.)
Also, select the decelerator so that the allowable input rotation speed and allowable input torque of the decelerator are not exceeded.

4-2 Wiring

Peripheral Equipment Connection Examples

R88D-KTA5L/-KT01L/-KT02L/-KT04L
R88D-KT01H/-KT02H/-KT04H/-KT08H/-KT10H/-KT15H (Single-phase Input)

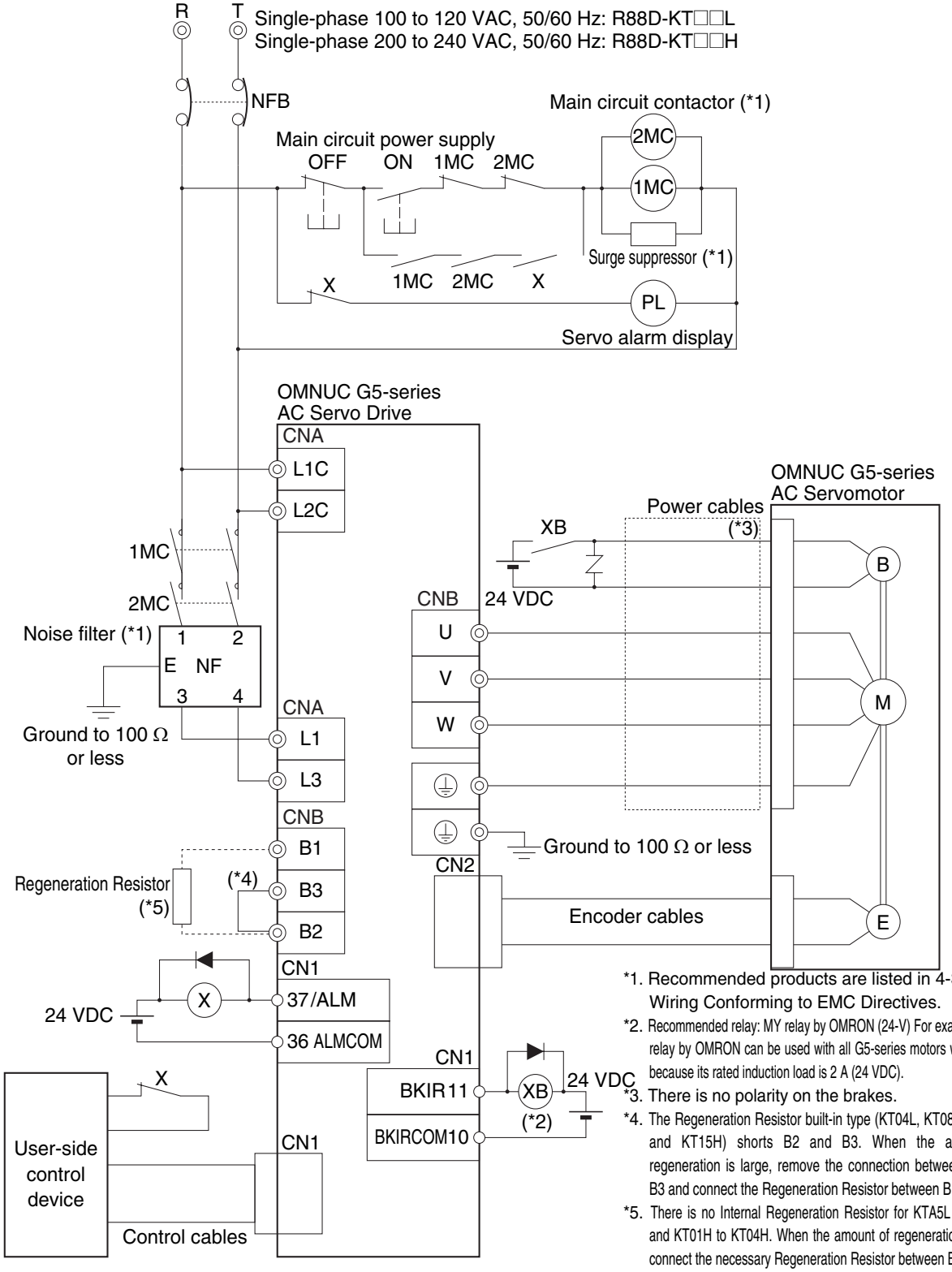

*1. Recommended products are listed in 4-3, Wiring Conforming to EMC Directives.

*2. Recommended relay: MY relay by OMRON (24-V) For example, MY2 relay by OMRON can be used with all G5-series motors with brakes because its rated induction load is 2 A (24 VDC).

*3. There is no polarity on the brakes.

*4. The Regeneration Resistor built-in type (KT04L, KT08H, KT10H and KT15H) shorts B2 and B3. When the amount of regeneration is large, remove the connection between B2 and B3 and connect the Regeneration Resistor between B1 and B2.

*5. There is no Internal Regeneration Resistor for KTA5L to KT02L, and KT01H to KT04H. When the amount of regeneration is large, connect the necessary Regeneration Resistor between B1 and B2.

R88D-KT01H/-KT02H/-KT04H/-KT08H/-KT10H/-KT15H (3-phase Input)

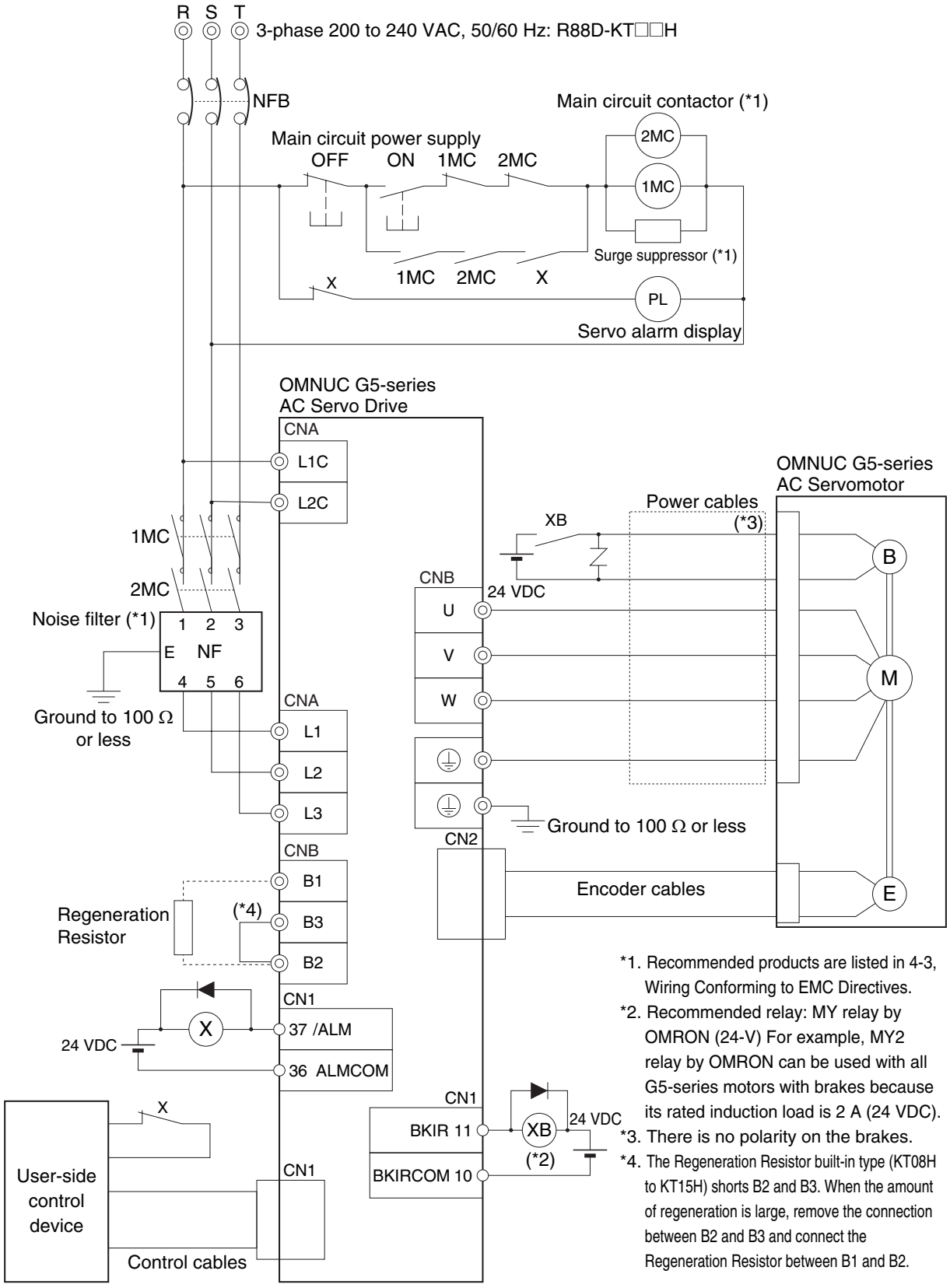

*1. Recommended products are listed in 4-3, Wiring Conforming to EMC Directives.

*2. Recommended relay: MY relay by OMRON (24-V) For example, MY2 relay by OMRON can be used with all G5-series motors with brakes because its rated induction load is 2 A (24 VDC).

*3. There is no polarity on the brakes.

*4. The Regeneration Resistor built-in type (KT08H to KT15H) shorts B2 and B3. When the amount of regeneration is large, remove the connection between B2 and B3 and connect the Regeneration Resistor between B1 and B2.

R88D-KT20H

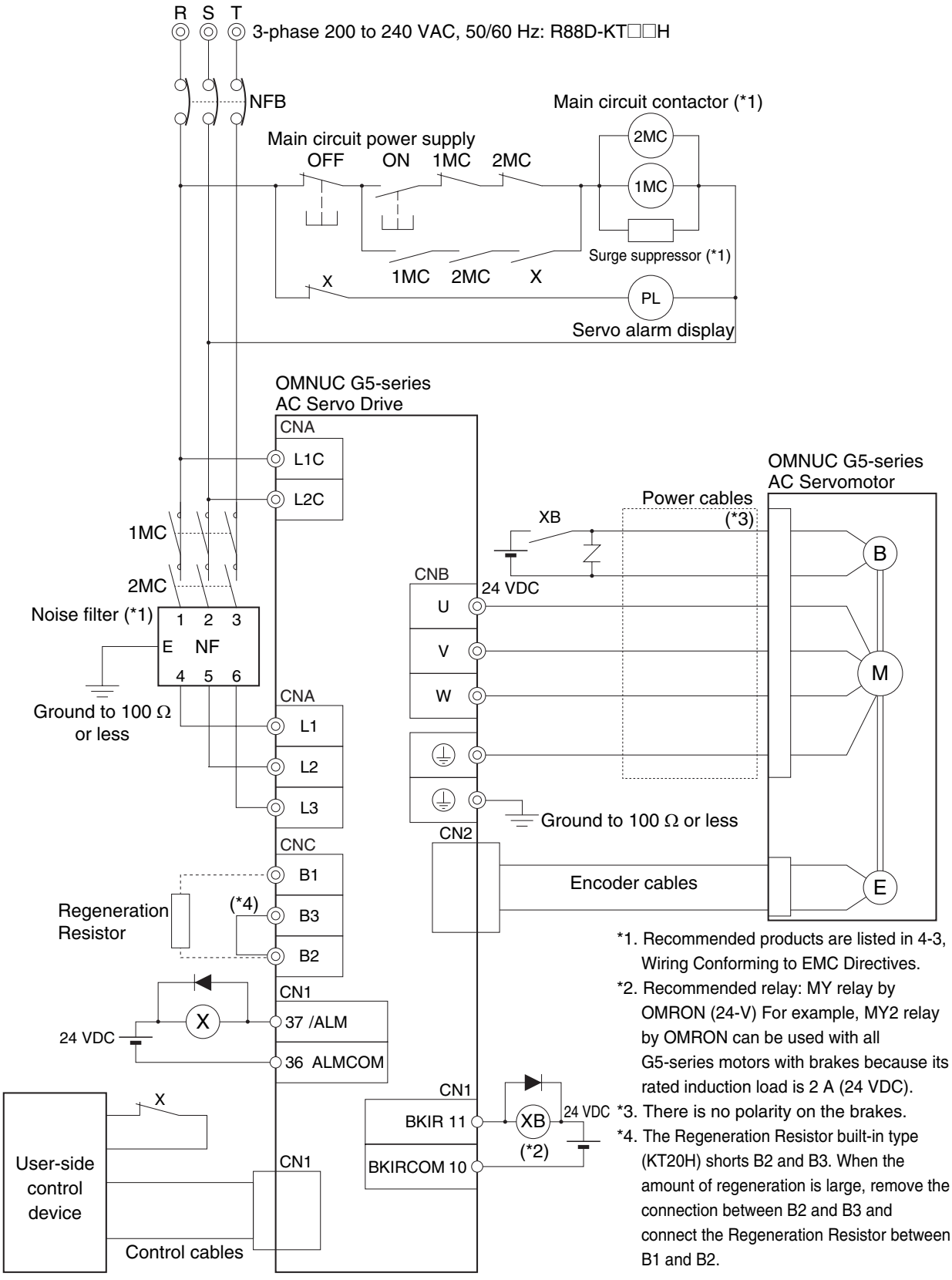

*1. Recommended products are listed in 4-3, Wiring Conforming to EMC Directives.

*2. Recommended relay: MY relay by OMRON (24-V) For example, MY2 relay by OMRON can be used with all G5-series motors with brakes because its rated induction load is 2 A (24 VDC).

*3. There is no polarity on the brakes.

*4. The Regeneration Resistor built-in type (KT20H) shorts B2 and B3. When the amount of regeneration is large, remove the connection between B2 and B3 and connect the Regeneration Resistor between B1 and B2.

R88D-KT30H/-KT50H

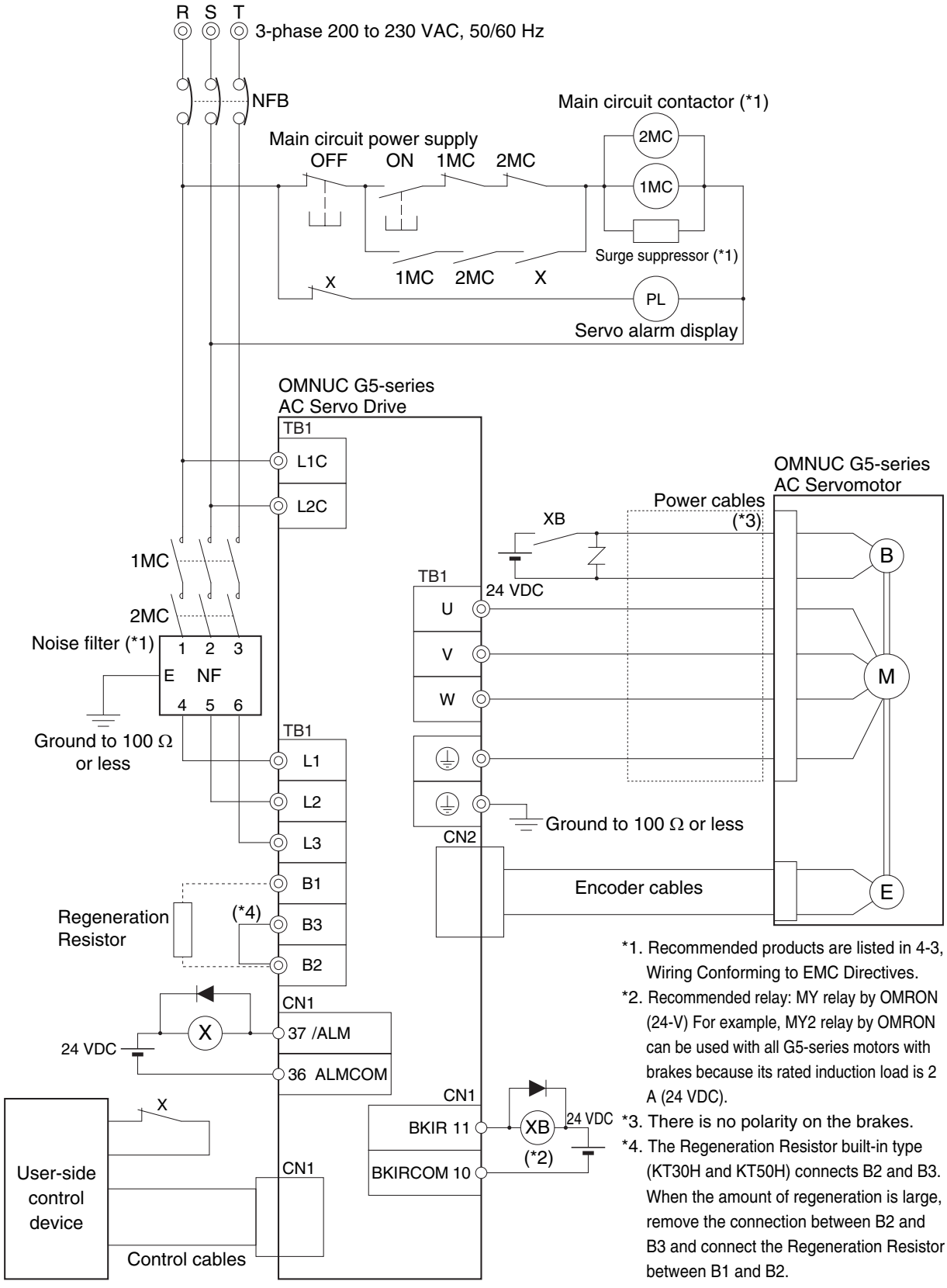

*1. Recommended products are listed in 4-3, Wiring Conforming to EMC Directives.

*2. Recommended relay: MY relay by OMRON (24-V) For example, MY2 relay by OMRON can be used with all G5-series motors with brakes because its rated induction load is 2 A (24 VDC).

*3. There is no polarity on the brakes.

*4. The Regeneration Resistor built-in type (KT30H and KT50H) connects B2 and B3. When the amount of regeneration is large, remove the connection between B2 and B3 and connect the Regeneration Resistor between B1 and B2.

R88D-KT06F/-KT10F/-KT15F/-KT20F

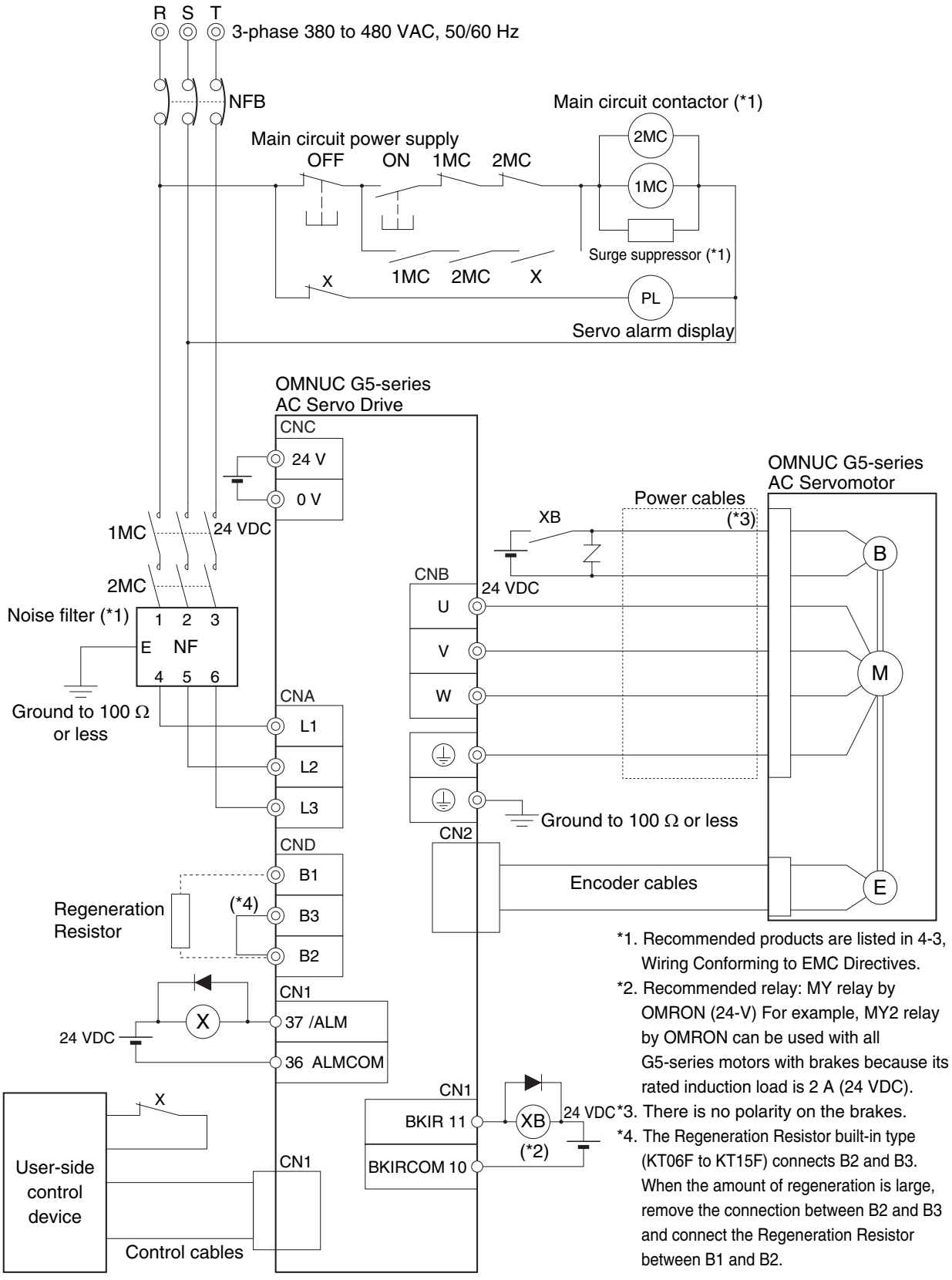

*1. Recommended products are listed in 4-3, Wiring Conforming to EMC Directives.

*2. Recommended relay: MY relay by OMRON (24-V) For example, MY2 relay by OMRON can be used with all G5-series motors with brakes because its rated induction load is 2 A (24 VDC).

*3. There is no polarity on the brakes.

*4. The Regeneration Resistor built-in type (KT06F to KT15F) connects B2 and B3. When the amount of regeneration is large, remove the connection between B2 and B3 and connect the Regeneration Resistor between B1 and B2.

R88D-KT30F/-KT50F

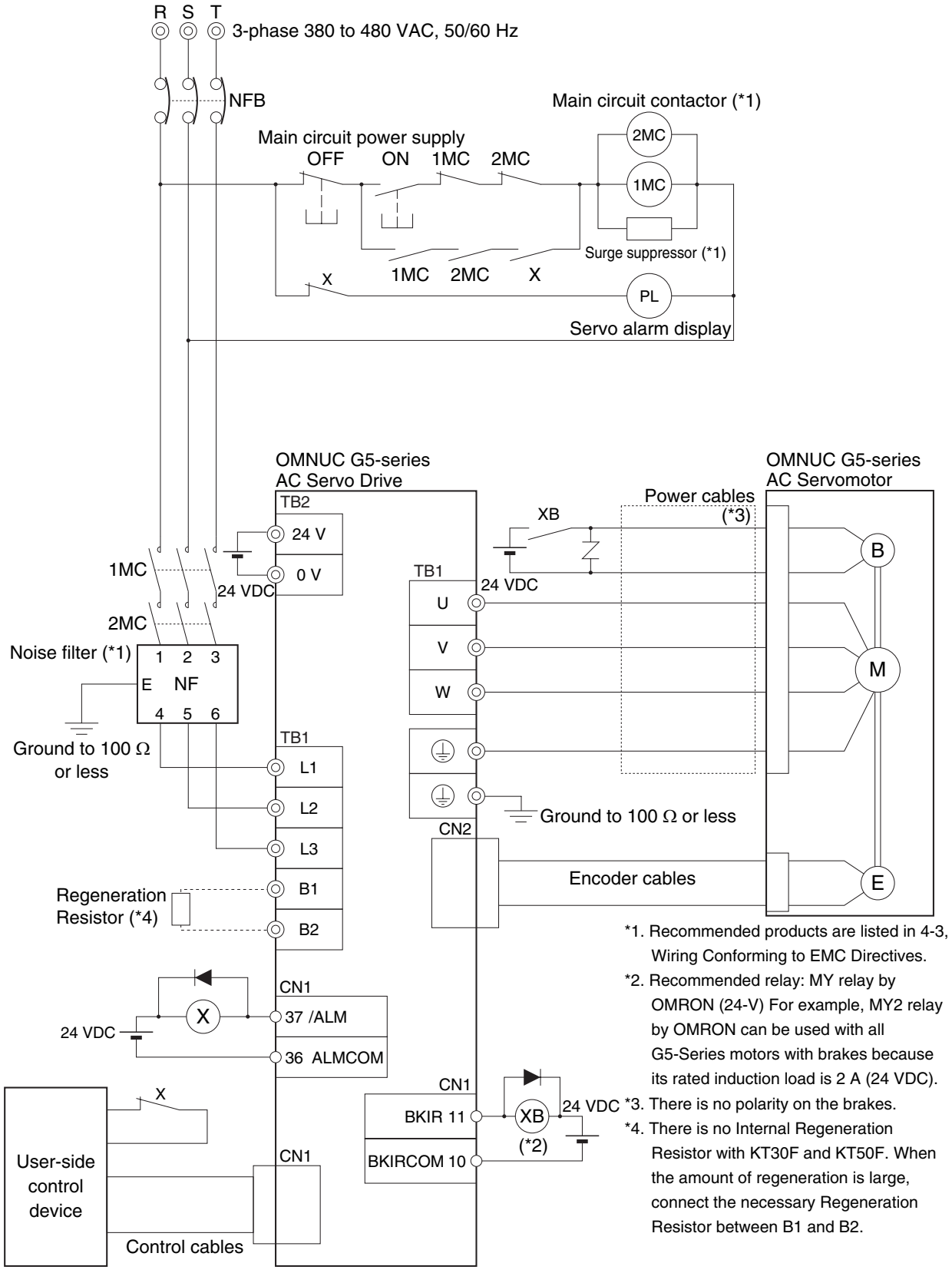

*1. Recommended products are listed in 4-3, Wiring Conforming to EMC Directives.
*2. Recommended relay: MY relay by OMRON (24-V) For example, MY2 relay by OMRON can be used with all G5-Series motors with brakes because its rated induction load is 2 A (24 VDC).
*3. There is no polarity on the brakes.
*4. There is no Internal Regeneration Resistor with KT30F and KT50F. When the amount of regeneration is large, connect the necessary Regeneration Resistor between B1 and B2.

Main Circuit and Motor Connections

When wiring the main circuit, use proper wire sizes, grounding systems, and noise resistance.

R88D-KTA5L/-KT01L/-KT02L/-KT04L
R88D-KT01H/-KT02H/-KT04H/-KT08H/-KT10H/-KT15H

Main Circuit Connector Specifications (CNA)

Symbol	Name	Function
L1	Main circuit power supply input	R88D-KT□L (50 to 400 W) : Single-phase 100 to 120 VAC (85 to 132 V) 50/60 Hz (200 to 400 W): 3-phase 100 to 120 VAC (170 to 132 V) 50/60 Hz R88D-KT□H (100 W to 1.5 kW) : Single-phase 200 to 240 VAC (170 to 264 V) 50/60 Hz (100 W to 1.5 kW): 3-phase 200 to 240 VAC (170 to 264 V) 50/60 Hz
L2		
L3		
L1C	Control circuit power supply input	R88D-KT□L : Single-phase 100 to 120 VAC (85 to 132 V) 50/60Hz R88D-KT□H : Single-phase 200 to 240 VAC (170 to 264 V) 50/60 Hz
L2C		

Motor Connector Specifications (CNB)

Symbol	Name	Function
B1	External Regeneration Resistor connection terminals	50 to 400 W: These terminals normally do not need to be connected. If there is high regenerative energy, connect an External Regeneration Resistor between B1 and B2. 750 W to 1.5 kW: Normally B2 and B3 are shorted. If there is high regenerative energy, remove the short-circuit bar between B2 and B3 and connect an External Regeneration Resistor between B1 and B2.
B2		
B3		
U	Motor connection terminals	These are the output terminals to the Servomotor. Be sure to wire them correctly.
V		
W		
⏚		
⏚	Frame ground	This is the ground terminal. Ground to 100 Ω or less.

R88D-KT20H

Main Circuit Connector Specifications (CNA)

Symbol	Name	Function
L1	Main circuit power supply input	R88D-KT□H (2 kW) : 3-phase: 200 to 230 VAC (170 to 253 V) 50/60 Hz
L2		
L3		
L1C	Control circuit power supply input	R88D-KT□H : Single-phase 200 to 230 VAC (170 to 253 V) 50/60 Hz
L2C		

Motor Connector Specifications (CNB)

Symbol	Name	Function	
U	Motor connection terminals	Red	These are the output terminals to the Servomotor. Be sure to wire them correctly.
V		White	
W		Blue	
⏚		Green/ Yellow	
⏚	Frame ground	This is the ground terminal. Ground to 100 Ω or less.	

External Regeneration Resistor Connector Specifications (CNC)

Symbol	Name	Function
B1	External Regeneration Resistor connection terminals	Normally B2 and B3 are connected. If there is high regenerative energy, remove the short-circuit bar between B2 and B3 and connect an External Regeneration Resistor between B1 and B2. When using terminal N, make sure not to exceed the fuse's rated voltage (360 VDC, 60 A).
B2		
B3		
N		

R88D-KT30H/-KT50H

Terminal Block Specifications

Symbol	Name	Function
L1	Main circuit power supply input	R88D-KT□H (3 to 5 kW): 3-phase 200 to 230 VAC (170 to 253 V) 50/60 Hz
L2		
L3		
L1C	Control circuit power supply input	R88D-KT□H: Single-phase 200 to 230 VAC (170 to 253 V) 50/60 Hz
L2C		
B1	External Regeneration Resistor connection terminals	Normally B2 and B3 are connected. If there is high regenerative energy, remove the short-circuit bar between B2 and B3 and connect an External Regeneration Resistor between B1 and B2.
B2		
B3		
U	Motor connection terminals	These are the output terminals to the Servomotor. Be sure to wire them correctly.
V		
W		
⏚		
⏚	Frame ground	This is the ground terminal. Ground to 100 Ω or less.

R88D-KT06F/-KT10F/-KT15F/-KT20F

Main Circuit Connector Specifications (CNA)

Symbol	Name	Function
L1	Main circuit power supply input	R88D-KT□F (600 W to 2 kW) : 3-phase: 380 to 480 VAC (323 to 528 V) 50/60 Hz
L2		
L3		

Motor Connector Specifications (CNB)

Symbol	Name	Function	
U	Motor connection terminals	Red	These are the output terminals to the Servomotor. Be sure to wire them correctly.
V		White	
W		Blue	
⏚		Green/ Yellow	
⏚	Frame ground	This is the ground terminal. Ground to 100 Ω or less.	

Control Circuit Connector Specifications (CNC)

Symbol	Name	Function
24 V	Control circuit power supply input	24 VDC (21.6 to 26.4 V)
0 V		

External Regeneration Resistor Connector Specifications (CND)

Symbol	Name	Function
B1	External Regeneration Resistor connection terminals	Normally B2 and B3 are connected. If there is high regenerative energy, remove the short-circuit bar between B2 and B3 and connect an External Regeneration Resistor between B1 and B2. When using N terminal, make sure not to exceed the fuse's rated voltage (660 VDC, 20 A).
B2		
B3		
N		

R88D-KT30F/-KT50F

Terminal Block Specifications (TB1)

Symbol	Name	Function	
L1	Main circuit power supply input	R88D-KT□F (3 to 5 kW): 3-phase 380 to 480 VAC (323 to 528 V) 50/60 Hz	
L2			
L3			
B1	External Regeneration Resistor connection terminals	A Regeneration Resistor is not built in. Connect an External Regeneration Resistor between B1 and B2, if necessary.	
B2			
U	Motor connection terminals	Red	These are the output terminals to the Servomotor. Be sure to wire them correctly.
V		White	
W		Blue	
⏚		Green/ Yellow	
⏚	Frame ground	This is the ground terminal. Ground to 100 Ω or less.	
NC	–	Do not connect.	
24 V	Control circuit power supply input	R88D-KT□F: 24 VDC (21.6 to 26.4 V)	
0 V			
⏚	Frame ground	This is the ground terminal. Ground to 100 Ω or less.	
NC	–	Do not connect.	

Terminal Block Wire Sizes

100-VAC Input Type Wire Sizes: R88D-KT□□L

Model (R88D-)			KTA5L	KT01L	KT02L	KT04L
Item		Unit				
Power supply capacity		kVA	0.4	0.4	0.5	0.9
Main circuit power supply input (L1 and L3, or L1, L2 and L3)	Rated current	A	1.4	2.6	4.3	7.6
	Wire size	–	AWG 14 to 18			
Control circuit power supply input (L1C and L2C)	Wire size	–	AWG 18			
Motor connection terminals (U, V, W, and FG) *1 *3	Rated current	A	1.2	1.7	2.5	4.6
	Wire size	–	AWG 14 to 18			
Frame ground (FG)	Wire size	–	AWG 14			
	Screw size	–	M4			
	Tightening torque	N·m	1.2			

200 VAC Input Type Wire Sizes: R88D-KT□□H

Model (R88D-)			KT01H	KT02H	KT04H	KT08H	KT10H
Item		Unit					
Power supply capacity		kVA	0.5	0.5	0.9	1.3	1.8
Main circuit power supply input (L1 and L3, or L1, L2 and L3)	Rated current	A	1.3	2.4/1.3 *2	4.1/2.4 *2	6.6/3.6 *2	9.1/5.9 *2
	Wire size	–	AWG14 to 18				AWG14
	Screw size	–	–	–	–	–	–
	Tightening torque	N·m	–	–	–	–	–
Control circuit power supply input (L1C and L2C)	Wire size	–	AWG18				
	Screw size	–	–	–	–	–	–
	Tightening torque	N·m	–	–	–	–	–
Motor connection terminals (U, V, W, and FG) *1 *3	Rated current	A	1.2	1.6	2.6	4.1	5.9
	Wire size	–	AWG14 to 18				AWG14
	Screw size	–	–	–	–	–	–
	Tightening torque	N·m	–	–	–	–	–
Frame ground (FG)	Wire size	–	AWG14				
	Screw size	–	M4				
	Tightening torque	N·m	1.2				

Model (R88D-)			KT15H	KT20H	KT30H	KT50H
Item		Unit				
Power supply capacity		kVA	2.3	3.3	4.5	7.5
Main circuit power supply input (L1 and L3, or L1, L2 and L3)	Rated current	A	14.2/8.1 *2	11.8	15.1	21.6
	Wire size	–	AWG14		AWG12	
	Screw size	–	–	–	M5	
	Tightening torque	N·m	–	–	2.0	
Control circuit power supply input (L1C and L2C)	Wire size	–	AWG18			
	Screw size	–	–	–	M5	
	Tightening torque	N·m	–	–	2.0	
Motor connection terminals (U, V, W, and FG) *1 *3	Rated current	A	9.4	13.4	18.6	33.0
	Wire size	–	AWG14		AWG12	
	Screw size	–	–	–	M5	
	Tightening torque	N·m	–	–	2.0	
Frame ground (FG)	Wire size	–	AWG14		AWG12	
	Screw size	–	M4		M5	
	Tightening torque	N·m	1.2		2.0	

400 VAC Input Type Wire Sizes: R88D-KT□□F

Model (R88D-) / Item		Unit	KT06F	KT10F	KT15F	KT20F	KT30F	KT50F
Main circuit power supply input (L1 and L3, or L1, L2 and L3)	Rated current	A	2.8	2.8	3.9	5.9	7.6	12.1
	Wire size	–	AWG14				AWG12	
	Screw size	–	–	–	–	–	M5	
	Tightening torque	N·m	–	–	–	–	2.0	
Control circuit power supply input (L1C and L2C)	Wire size	–	AWG20 to 24				AWG18	
	Screw size	–	–	–	–	–	M5	
	Tightening torque	N·m	–	–	–	–	2.0	
Motor connection terminals (U, V, W, and FG) *1 *3	Rated current	A	2.9	2.9	4.7	6.7	9.4	16.5
	Wire size	–	AWG14				AWG12	
	Screw size	–	–	–	–	–	M5	
	Tightening torque	N·m	–	–	–	–	2.0	
Frame ground (FG)	Wire size	–	AWG14				AWG12	
	Screw size	–	M4				M5	
	Tightening torque	N·m	1.2				2.0	

*1. Use the same wire sizes for B1 and B2.

*2. The first value is for single-phase input and the second value is for 3-phase input.

*3. Connect an OMRON power cable to the motor connection terminals.

Wire Sizes and Allowable Current (Reference)

The following table shows the allowable current when there are 3 power supply wires. Use a current below these specified values.

600-V Heat-resistant Vinyl Wire (HIV)

AWG size	Nominal cross-sectional area (mm^2)	Configuration (wires/mm^2)	Conductive resistance (Ω/km)	Allowable current (A) for ambient temperature		
				30°C	40°C	50°C
20	0.5	19/0.18	39.5	6.6	5.6	4.5
–	0.75	30/0.18	26.0	8.8	7.0	5.5
18	0.9	37/0.18	24.4	9.0	7.7	6.0
16	1.25	50/0.18	15.6	12.0	11.0	8.5
14	2.0	7/0.6	9.53	23	20	16
12	3.5	7/0.8	5.41	33	29	24
10	5.5	7/1.0	3.47	43	38	31
8	8.0	7/1.2	2.41	55	49	40
6	14.0	7/1.6	1.35	79	70	57

Terminal Block Wiring Procedure

On a Servo Drive with 2.0 kW or less, connector-type terminal blocks are used.
The procedure for wiring these terminal blocks is explained below.

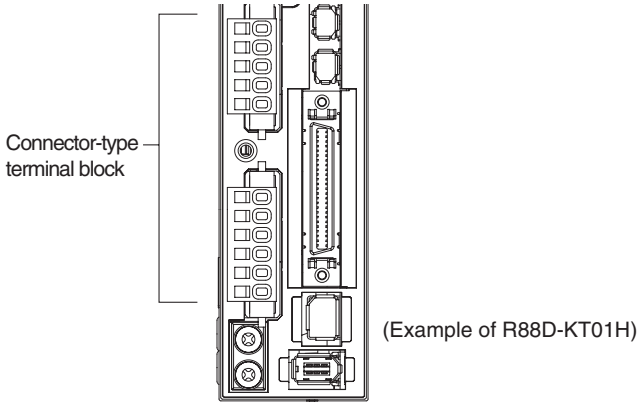

1. **Remove the terminal block from the Servo Drive before wiring.**
   The Servo Drive may be damaged if the wiring is done with the terminal block in place.
2. **Strip off 8 to 9 mm of the covering from the end of each wire.**
   Refer to "Terminal Block Wire Sizes"(P.4-17) for applicable wire sizes.

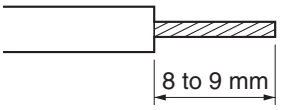

3. **Open the wire insertion slots in the terminal block using a tool.**
   There are 2 ways to open the wire insertion slots, as follows.
   - Pry the slot open using the lever that comes with the Servo Drive. (Figure A)
   - Insert a flat-blade screwdriver (end width: 3.0 to 3.5 mm) into the opening for the screwdriver on the terminal block, and press down firmly to open the slot. (Figure B)

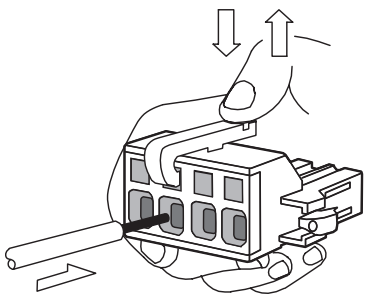

Figure A

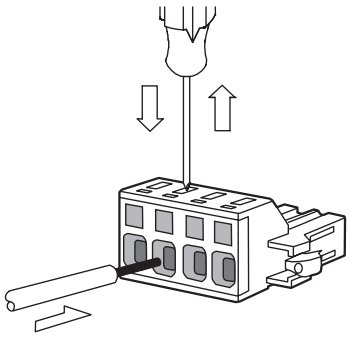

Figure B

4. **With the wire insertion slot held open, insert the end of the wire.**
   After inserting the wire, let the slot close by releasing the pressure from the lever or the screwdriver.
5. **Mount the terminal block to the Servo Drive.**
   After all of the terminals have been wired, return the terminal block to its original position on the Servo Drive.

4-3 Wiring Conforming to EMC Directives

Conformance to the EMC Directives (EN 55011 Class A Group 1 (EMI) and EN 61000-6-2 (EMS)) can be ensured by wiring under the conditions described in this section.
These conditions are for conformance of OMNUC G5-series products to the EMC directives. EMC-related performance of these products, however, may be influenced by the configuration, wiring, and other conditions of the equipment in which the products are installed. The EMC conformance of the system as a whole must be confirmed by the customer.

The following are the requirements for EMC Directive conformance.

- The Servo Drive must be installed in a metal case (control panel). (The motor does not, however, have to be covered with a metal plate.)
- Noise filters and lightening surge absorptive elements (surge absorbers) must be installed on power supply lines.
- Braided shielded cables must be used for all I/O signal cables and encoder cables. (Use tin-plated, mild steel wires for the shielding.)
- All cables, I/O wiring, and power lines connected to the Servo Drive must have clamp filters installed to improve the noise immunity.
- The shields of all cables must be directly connected to a ground plate.

Wiring Method

R88D-KTA5L/-KT01L/-KT02L/-KT04L/-KT01H/-KT02H/-KT04H/-KT08H/-KT10H/-KT15H/-KT20H/-KT30H/-KT50H

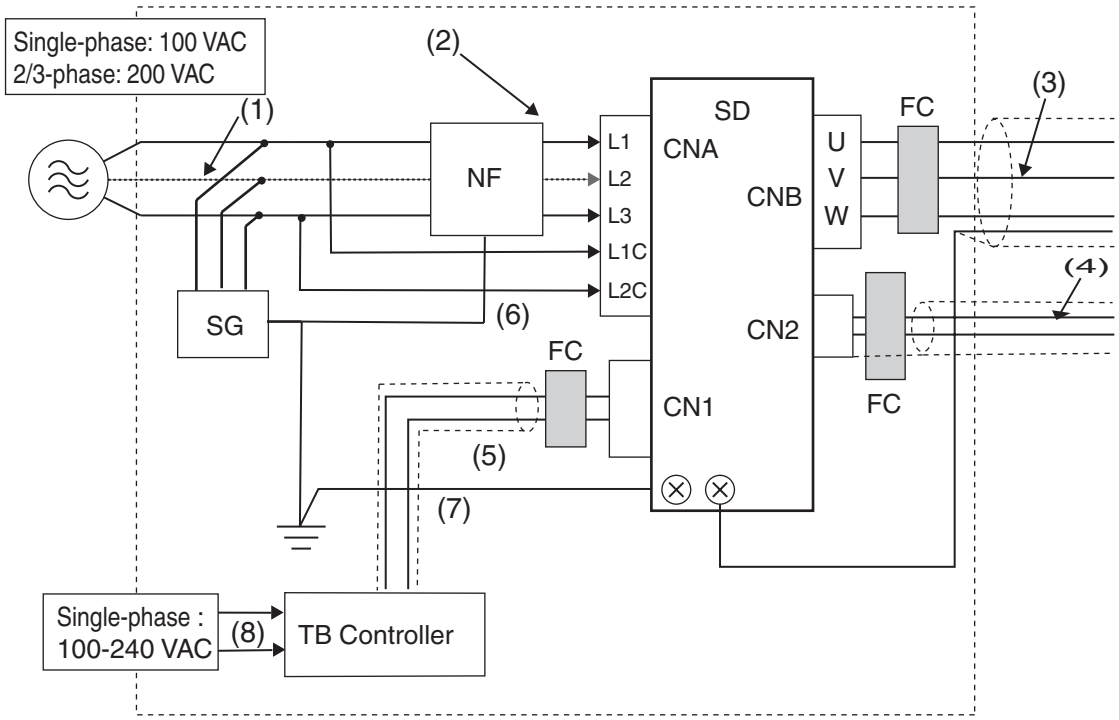

*1. For models with a single-phase power supply input (R88D-KTA5L/-KT01L/-KT02L/-KT04L/-KT01H/-KT02H/-KT04H/-KT08H/-KT10H/-KT15H), the main circuit power supply input terminals are L1 and L3.

- Ground the motor's frame to the machine ground when the motor is on a movable shaft.
- Use a ground plate for the frame ground for each unit, as shown in the above diagrams, and ground to a single point.
- Use ground lines with a minimum thickness of 3.5 mm^2, and arrange the wiring so that the ground lines are as short as possible.
- A no-fuse breaker, surge absorber, and noise filter should be positioned near the input terminal block (ground plate), and I/O lines should be separated and wired at the shortest distance.

R88D-KT06F/-KT10F/-KT15F/-KT20F/-KT30F/-KT50F

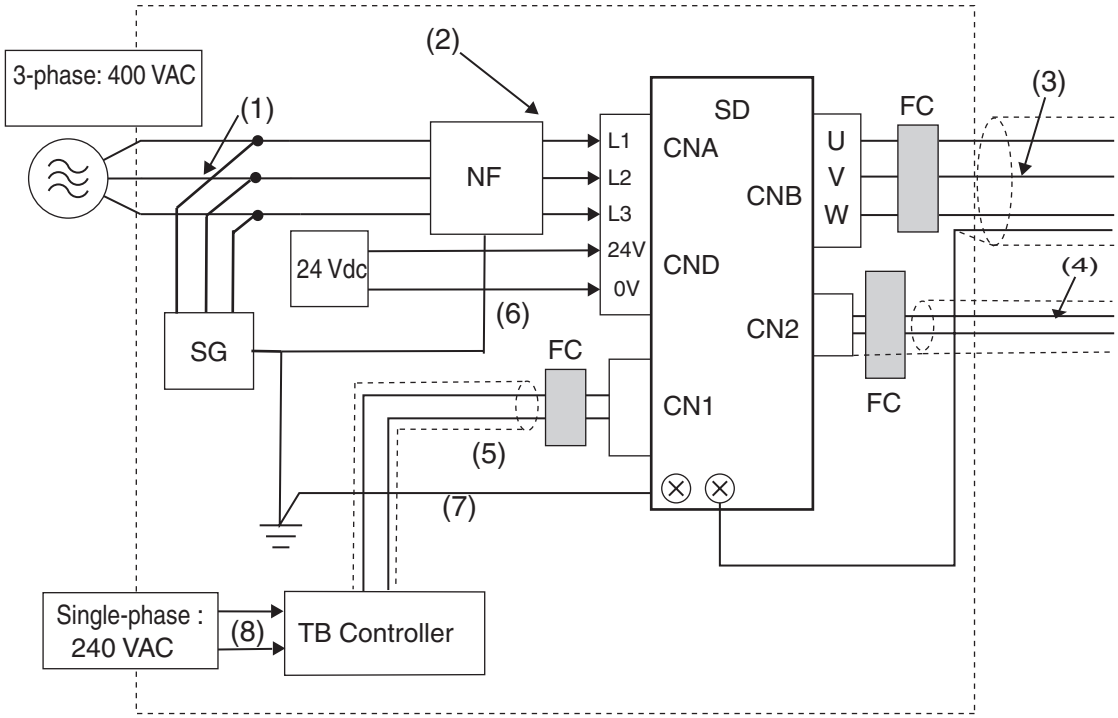

Unit Details

Symbol	Name	Manufacturer	Model	Comment
SG	Surge absorber (Optional)	Okaya Electric Industries Co., Ltd.	RAV781BWZ-4	Single-phase 100 VAC
			RAV781BXZ-4	3-phase 200 VAC
NF	Noise filter	Okaya Electric Industries Co., Ltd.	SUP-EK5-ER-6	Single-phase 100/200 VAC (5 A)
			3SUP-HQ10-ER-6	3-phase 200 VAC (10 A)
			3SUP-HU30-ER-6	3-phase 200 VAC (30 A)
			3SUP-HL50-ER-6B	3-phase 200 VAC (50 A)
		Rasmi	See chapter 3	1-phase 200 VAC 3-phase 400 VAC
SD	Servo Drive	OMRON	–	*1
SM	Servomotor	OMRON	–	*1
FC	Clamp core	TDK	ZACT305-1330	–
TB	Controller	–	–	Switch box

*1. A specified combination of Servo Drive and Servomotor must be used.

Cable Details

Symbol	Supplies from	Connects to	Cable name	Length	Comment	Shielded	Ferrite
(1)	AC power supply	Noise filter	Power supply line	2 m	3-phase or single phase	No	No
(2)	Noise filter	Servo Drive	Power supply line	2 m	–	No	Optional
(3)	Servo Drive	Servomotor	Power cable	20 m	–	Yes	Optional
(4)	Servo Drive	Servomotor	Encoder cable	20 m	–	Yes	Optional
(5)	Switch box	Servo Drive	I/O cable	2 m	–	Optional	Optional
(6)	Frame ground	Noise filter	FG line	1.5 m	–	No	No
(7)	Frame ground	Noise filter	FG line	1.5 m	–	No	No
(8)	AC power supply	Switch box	Power supply line	1.5 m	–	No	No

- For operations, if no-fuse breakers are installed at the top and the power supply line is wired from the lower duct, use metal tubes for wiring or make sure that there is adequate distance between the input lines and the internal wiring. If input and output lines are wired together, noise resistance will decrease.
- The noise filter must be installed as close as possible to the entrance of the control panel. Wire as shown at the left in the following illustration.

○ Separate the input and output.

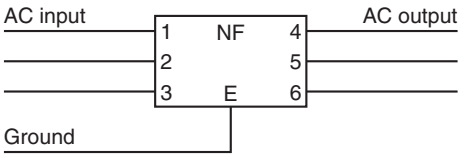

✕ The effect of the noise filter is small.

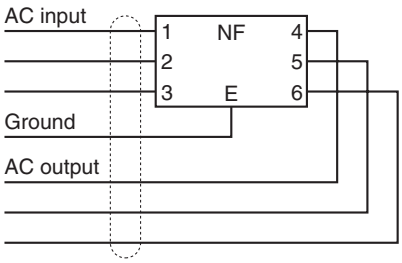

- Use twisted-pair cables for the power supply cables, or bind the cables.

○ Twisted-pair cables

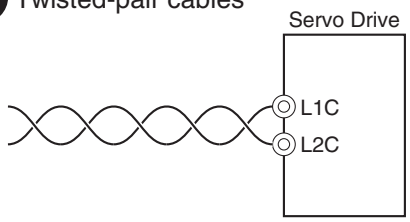

○ Bound cables

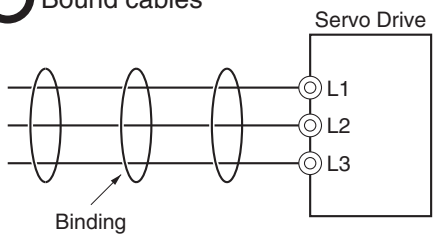

- Separate power supply lines and signal lines when wiring.

Control Panel Structure

Openings in the control panel, such as holes for cables, panel mounting holes, and gaps around the door, may allow electromagnetic waves into the panel. To prevent this, observe the recommendations described below when designing or selecting a control panel.

Case Structure

- Use a metal control panel with welded joints at the top, bottom, and sides so that the surfaces are electrically conductive.
- If assembly is required, strip the paint off the joint areas (or mask them during painting), to make them electrically conductive.
- The panel may warp and gaps may appear when screws are tightened. Be sure that no gaps appear when tightening screws.
- Do not leave any conductive part unconnected.
- Ground all units within the case to the case itself.

Door Structure

- Use a metal door.
- Use a water-draining structure where the door and case fit together, and leave no gaps. (Refer to the diagrams.)
- Use a conductive gasket between the door and the case. (Refer to the diagrams.)
- Strip the paint off the sections of the door and case that will be in contact with the conductive gasket (or mask them during painting), so that they are electrically conductive.
- The panel may warp and gaps may appear when screws are tightened. Be sure that no gaps appear when tightening screws.

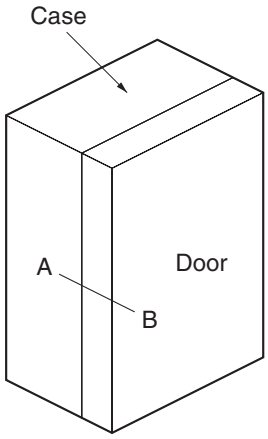

[Control panel]

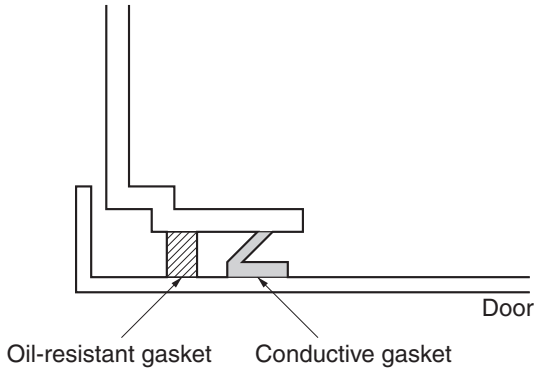

[A-B cross-section diagram]

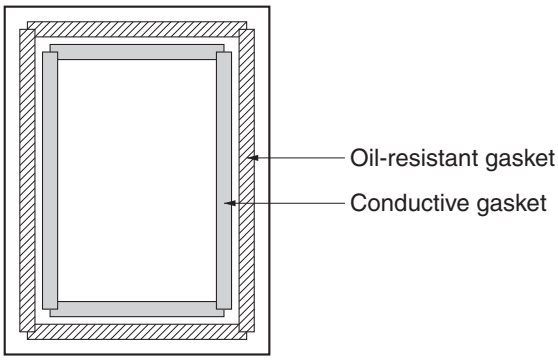

[Door (interior side)]

Selecting Connection Component

This section explains the criteria for selecting the connection components required to improve noise resistance. Understand each component's characteristics, such as its capacity, performance, and applicable range when selecting the connection components.
For more details, contact the manufacturers directly.

No-fuse Breaker (NFB)

When selecting a no-fuse breaker, consider the maximum input current and the inrush current.

Maximum Input Current

- The momentary maximum output of the Servo Drive is approx. 3 times the rated output, and can be output for up to 3 seconds.
  Therefore, select no-fuse breakers with an operation time of at least 5 seconds at 300% of the rated current ratio. General and low-speed no-fuse breakers are generally suitable.
- Select a no-fuse breaker with a rated current greater than the total effective load current of all the motors (when multiple Servo Drives are used). (The rated current of the power supply input for each motor is provided in "Main Circuit and Motor Connections"(P.4-13).)
- Add the current consumption of other controllers, and any other components when selecting.

Inrush Current

- The following table lists the Servo Drive inrush currents.
- With low-speed no-fuse breakers, an inrush current 10 times the rated current can flow for 0.02 second.
- When the power of multiple Servo Drives are turned ON simultaneously, select a no-fuse breaker with a 20-ms allowable current that is greater than the total inrush current, shown in the following table.

Servo Drive model	Inrush current (Ao-p)	
	Main circuit power supply	Control circuit power supply
R88D-KTA5L	7	14
R88D-KT01L	7	14
R88D-KT02L	7	14
R88D-KT04L	15	14
R88D-KT01H	14	28
R88D-KT02H	14	28
R88D-KT04H	14	28
R88D-KT08H	29	28
R88D-KT10H	29	28
R88D-KT15H	29	28
R88D-KT20H	29	14
R88D-KT30H	22	14
R88D-KT50H	22	14

Servo Drive model	Inrush current (Ao-p)	
	Main circuit power supply	Control circuit power supply
R88D-KT06F	28	48
R88D-KT10F	28	48
R88D-KT15F	28	48
R88D-KT20F	32	48
R88D-KT30F	32	48
R88D-KT50F	32	48

Leakage Breaker

- Select leakage breakers designed for protection against ground faults.
- Because switching takes place inside the Servo Drives, high-frequency current leaks from the SW elements of the Servo Drive, the armature of the motor, and the cables.
  High-frequency, surge-resistant leakage breakers, because they do not detect high-frequency current, can prevent operation with high-frequency leakage current.
  When using a general leakage breaker, use 3 times the total of the leakage current given in the following table as a reference value.
- When selecting leakage breakers, remember to add the leakage current from devices other than the motor, such as devices using a switching power supply, noise filters, inverters, and so on.
  To prevent malfunction due to inrush current, we recommend using a leakage breaker of 10 times the total of all current values.
- The leakage breaker is activated at 50% of the rated current. Select a leakage breaker with enough capacity.
- For details on leakage breakers selection method, refer to the manufacturer's catalog.

Surge Absorber

- Use surge absorbers to absorb lightning surge voltage and abnormal voltage from power supply input lines.
- When selecting surge absorbers, take into account the varistor voltage, the surge immunity and the energy tolerated dose.
- For 200-VAC systems, use surge absorbers with a varistor voltage of 620 V.
- The surge absorbers shown in the following table are recommended.

Manufacturer	Model	Surge immunity		Type	Comment
Okaya Electric Industries Co., Ltd.	R•A•V-781BWZ-4	700 V ± 20%	2500 A	Block	Single-phase 100/ 200 VAC
Okaya Electric Industries Co., Ltd.	R•A•V-781BXZ-4	700 V ± 20%	2500 A		3-phase 200 VAC

Note 1. Refer to the manufacturers' catalog for operating details.

Note 2. The surge immunity is for a standard impulse current of 8/20 μs. If pulses are wide, either decrease the current or change to a larger-capacity surge absorber.

External Dimensions

For single-phase (BWZ series)

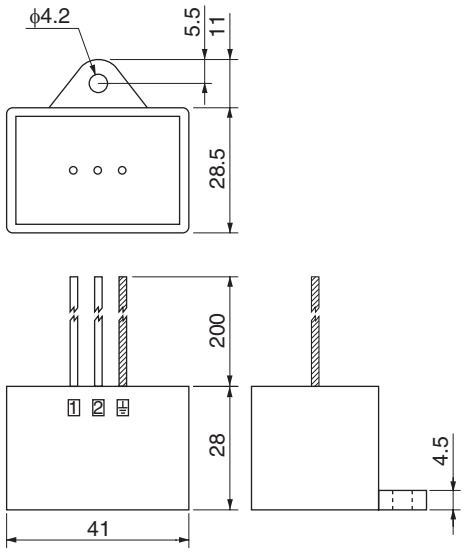

For 3-phase (BXZ series)

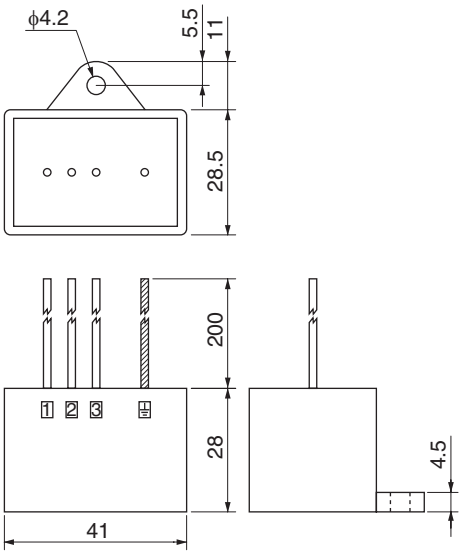

Equalizing Circuits

For single-phase (BWZ series)

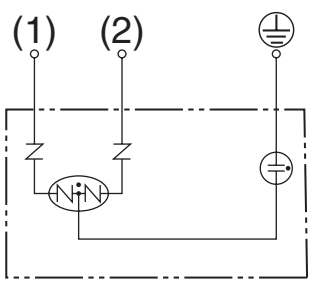

For 3-phase (BXZ series)

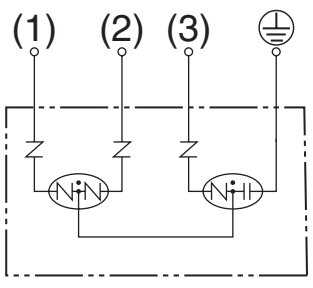

Noise Filter for the Brake Power Supply

- We recommend using a noise filter for the Servo Drive.

Model	Rated current	Rated voltage	Leakage current	Manufacturer
SUP-EK5-ER-6	5 A	250 V	1.0 mA (at 250 Vrms, 60 Hz)	Okaya Electric Industries Co., Ltd.

Note. Noise can also be reduced by 1.5 turns with the ZCAT3035-1330 (TDK) Radio Noise Filter.

Radio Noise Filter and Emission Noise Prevention Clamp Core

Use one of the following filters to prevent switching noise of PWM of the Servo Drive and to prevent noise emitted from the internal clock circuit.

Model	Manufacturer	Application
3G3AX-ZCL1 *1	OMRON	For Drive output and power cable
3G3AX-ZCL2 *2	OMRON	For Drive output and power cable
ESD-R-47B *3	NEC TOKIN	For Drive output and power cable
ZCAT3035-1330 *4	TDK	For Encoder cable and I/O cable

*1. Generally used for 1.5 kW or higher.

*2. Generally used for 1.5 kW or lower. The maximum number of windings is 3 turns.

*3. Generally used for 50/100 W. The maximum number of windings is 2 turns.

*4. Also used on the Drive output power lines to comply with the EMC Directives. Only a clamp is used. This clamp can also be used to reduce noise current on a FG line.

External Dimensions

3G3AX-ZCL1

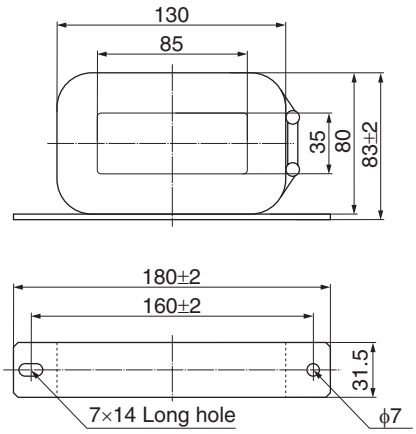

3G3AX-ZCL2

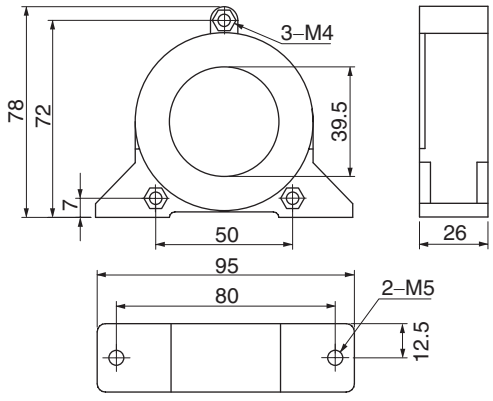

ESD-R-47B

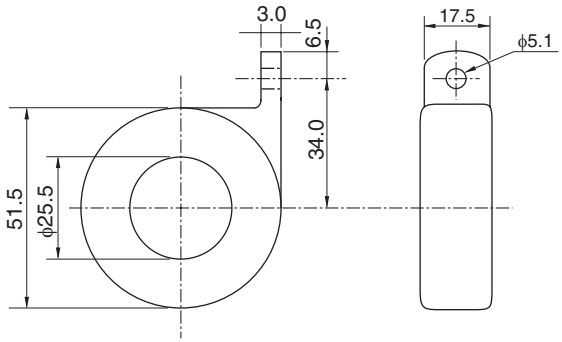

ZCAT3035-1330

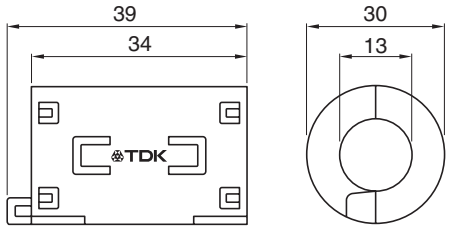

Impedance Characteristics

3G3AX-ZCL1

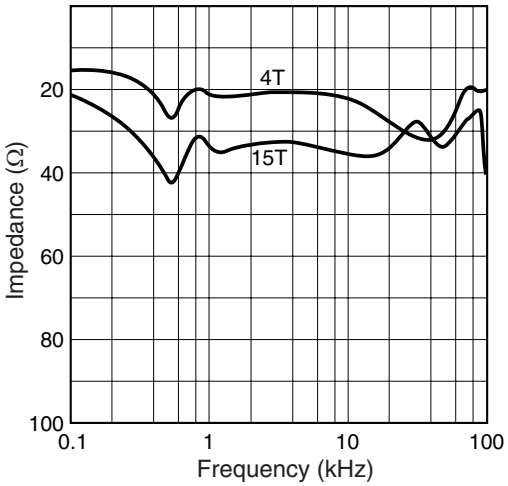

3G3AX-ZCL2

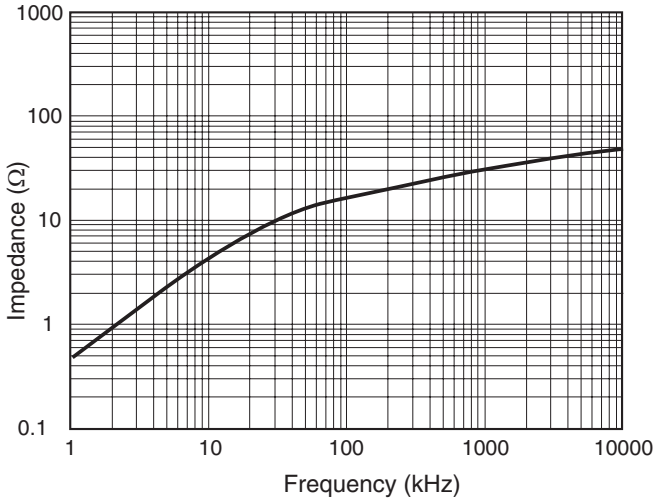

ESD-R-47B

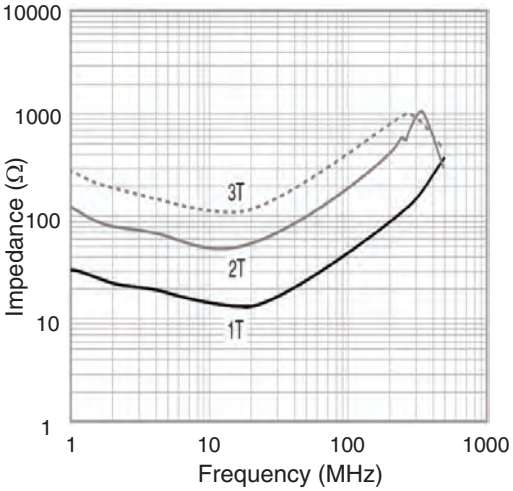

ZCAT3035-1330

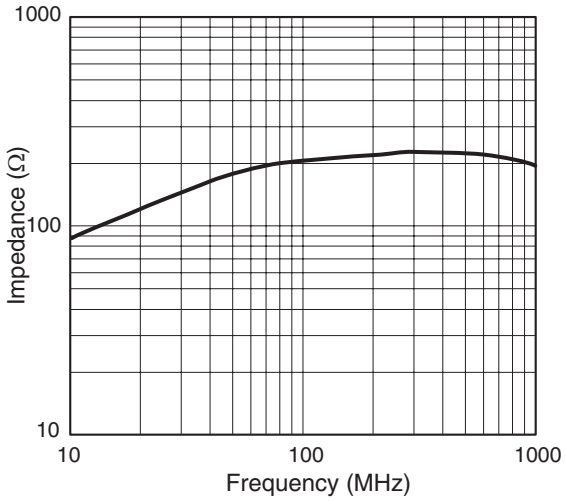

Surge Suppressor

- Install surge suppressors for loads that have induction coils, such as relays, solenoids, brakes, clutches, etc.
- The following table shows the types of surge suppressors and recommended products.

Type	Feature	Recommended product
Diodes	Diodes are used for relatively small loads such as relays when the reset time is not a critical issue. At power shutoff the surge voltage is the lowest, but the reset time takes longer. Used for 24/48-VDC systems.	Use a fast-recovery diode with a short reverse recovery time. (e.g., RU2 of Sanken Electric Co., Ltd.).
Thyristors and varistors	Thyristors and varistors are used for loads when induction coils are large, as in electromagnetic brakes, solenoids, etc., and when reset time is critical. The surge voltage at power shutoff is approx. 1.5 times the varistor voltage.	Select the varistor voltage as follows. 24-VDC systems: varistor voltage 39 V 100-VDC systems: varistor voltage 200 V 100-VAC systems: varistor voltage 270 V 200-VAC systems: varistor voltage 470 V
Capacitor + resistor	The capacitor plus resistor combination is used to absorb vibration in the surge at power supply shutoff. The reset time can be shortened by selecting the appropriate capacitance and resistance.	Okaya Electric Industries Co., Ltd. XEB12002 0.2 μF-120 Ω XEB12003 0.3 μF-120 Ω

- Thyristors and varistors are made by the following manufacturers. Refer to manufacturer's documentation for details on these components.

  Thyristors: Ishizuka Electronics Co.

  Varistor: Ishizuka Electronics Co., Panasonic Corporation

Contactor

- Select contactors based on the circuit's inrush current and the maximum momentary phase current.
- The drive inrush current is covered in the preceding explanation of no-fuse breaker selection. And the maximum momentary phase current is approx. twice the rated current.
- The following table shows the recommended contactors.

Manufacturer	Model	Rated current	Coil voltage
OMRON	J7L-09-22200	11 A	200 VAC
	J7L-12-22200	13 A	200 VAC
	J7L-18-22200	18 A	200 VAC
	J7L-32-22200	26 A	200 VAC
	J7L-40-22200	35 A	200 VAC
	J7L-50-22200	50 A	200 VAC
	J7L-65-22200	65 A	200 VAC
	J7L-75-22200	75 A	200 VAC

Improving Encoder Cable Noise Resistance

Take the following steps during wiring and installation to improve the encoder's noise resistance.

- Always use the specified encoder cables.
- If cables are joined midway, be sure to use connectors. And do not remove more than 50 mm of the cable insulation. In addition, always use shielded cables.
- Do not coil cables. If cables are long and are coiled, mutual induction and inductance will increase and cause malfunctions. Always use cables fully extended.
- When installing noise filters for encoder cables, use clamp filters.
- The following table shows the recommended clamp filters.

Manufacturer	Product name	Model	Specifications
NEC TOKIN	Clamp filters	ESD-SR-250	For cable dia. up to 13 mm
TDK	Clamp filters	ZCAT3035-1330	For cable dia. up to 13 mm

- Do not place the encoder cable with the following cables in the same duct.
  Control cables for brakes, solenoids, clutches, and valves.

External Dimensions

ESD-SR-250

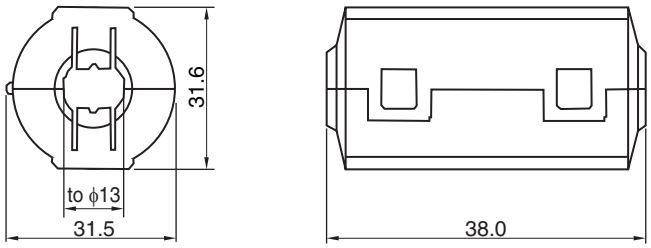

Impedance Characteristics

ESD-SR-250

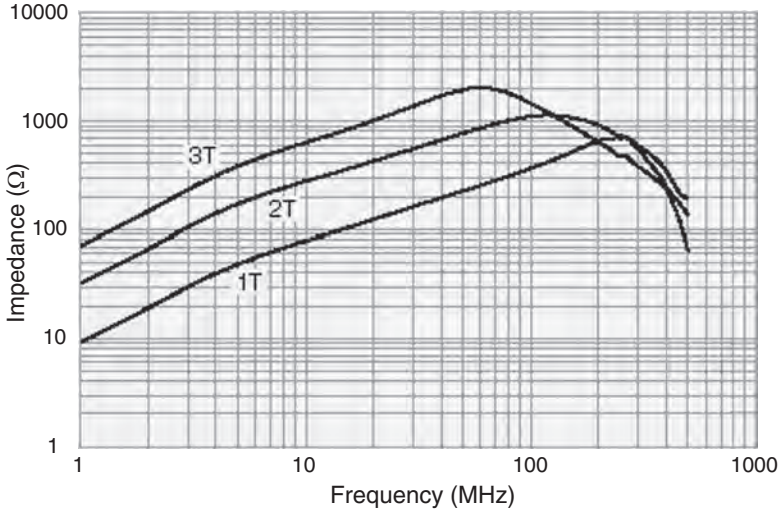

Improving Control I/O Signal Noise Resistance

Positioning can be affected and I/O signal errors can occur if control I/O is influenced by noise.

- Use completely separate power supplies for the control power supply (especially 24 VDC) and the external operation power supply. In particular, do not connect the 2 power supply ground wires.
- Install a noise filter on the primary side of the control power supply.
- If motors with brakes are being used, do not use the same 24-VDC power supply for both the brakes and the control I/O. Additionally, do not connect the ground wires. Connecting the ground wires may cause I/O signal errors.
- Keep the power supply for pulse commands and error counter reset input lines separated from the control power supply as far as possible. In particular, do not connect the 2 power supply ground wires.
- We recommend using line drivers for the pulse command and error counter reset outputs.
- Always use twisted-pair shielded cable for the pulse command and error counter reset signal lines, and connect both ends of the shield cable to frame grounds.
- If the control power supply wiring is long, noise resistance can be improved by adding 1-μF laminated ceramic capacitors between the control power supply and ground at the drive input section or the controller output section.
- For open collector inputs/outputs, keep the length of wires to within 2 m.

Reactor to Reduce Harmonic Current

Harmonic Current Measures

- Use a Reactor to suppress harmonic currents. The Reactor functions to suppress sudden and quick changes in electric currents.
- The *Guidelines for Suppressing Harmonic Currents in Home Appliances and General Purpose Components* requires that manufacturers take appropriate remedies to suppress harmonic current emissions onto power supply lines.
- Select the proper Reactor model according to the Servo Drive to be used.

Servo Drive model	Reactor		
	Model	Rated current	Inductance
R88D-KTA5L R88D-KT01H	3G3AX-DL2002	1.6 A	21.4 mH
R88D-KT01L R88D-KT02H	3G3AX-DL2004	3.2 A	10.7 mH
R88D-KT02L R88D-KT04H	3G3AX-DL2007	6.1 A	6.75 mH
R88D-KT04L R88D-KT08H R88D-KT10H	3G3AX-DL2015	9.3 A	3.51 mH
R88D-KT15H	3G3AX-DL2022	13.8 A	2.51 mH
R88D-KT08H R88D-KT10H R88D-KT15H	3G3AX-AL2025	10.0 A	2.8 mH
R88D-KT20H R88D-KT30H	3G3AX-AL2055	20.0 A	0.88 mH
R88D-KT50H	3G3AX-AL2110	34.0 A	0.35 mH

4-4 Regenerative Energy Absorption

The Servo Drives have internal regeneration process circuitry, which absorbs the regenerative energy produced during motor deceleration and prevents the DC voltage from increasing. An overvoltage error occurs, however, if the amount of regenerative energy from the motor is too large. If this occurs, remedies must be taken to reduce the regenerative energy by changing operating patterns, or to increase the regeneration process capacity by connecting an External Regeneration Unit.

Calculating the Regenerative Energy

Horizontal Axis

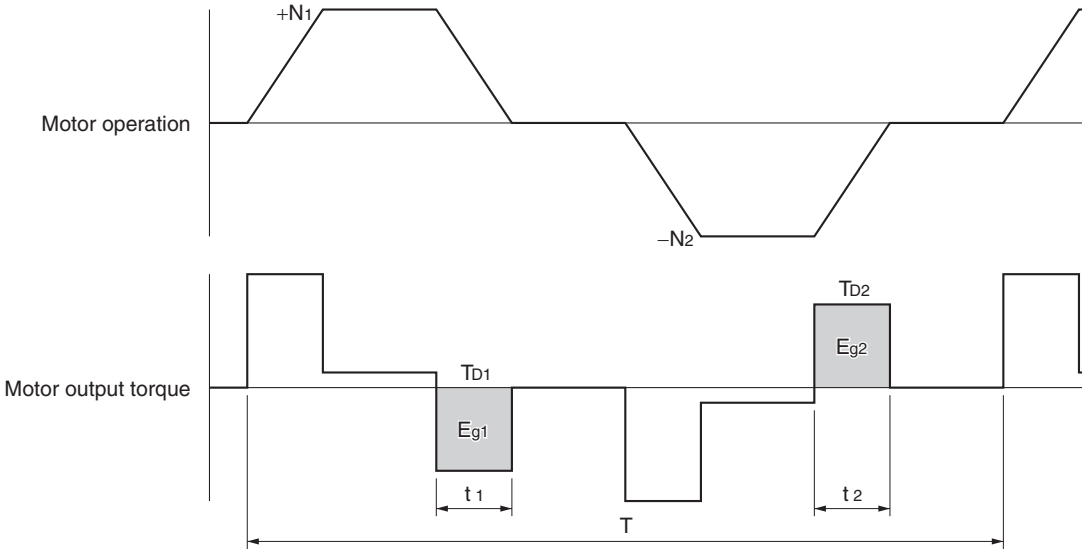

- In the output torque graph, acceleration in the forward direction is shown as positive, and acceleration in the reverse direction is shown as negative.
- The regenerative energy values in each region can be derived from the following equations.

$$\cdot E_{g1} = \frac{1}{2} \cdot \frac{2\pi}{60} \cdot N_1 \cdot T_{D1} \cdot t_1 \quad [J]$$

$$\cdot E_{g2} = \frac{1}{2} \cdot \frac{2\pi}{60} \cdot N_2 \cdot T_{D2} \cdot t_2 \quad [J]$$

N_1, N_2 : Rotation speed at start of deceleration [r/min]

T_{D1}, T_{D2} : Deceleration torque [N·m]

t_1, t_2 : Deceleration time [s]

Note. Due to the loss of motor winding resistance and PWM, the actual regenerative energy will be approx. 90% of the values derived from these equations.

- For Servo Drive models with internal capacitors used for absorbing regenerative energy (i.e., Servo Drive models of 400 W or less), the values Eg_1 and Eg_2 (unit: J) must be lower than the drive's regeneration absorption capacity. (The capacity depends on the model. For details, refer to the next section.)
- For Servo Drive models with an Internal Regeneration Resistor used for absorbing regenerative energy (i.e., Servo Drive models of 500 W or more), the average amount of regeneration Pr (unit: W) must be calculated, and this value must be lower than the drive's regeneration absorption capacity. (The capacity depends on the model. For details, refer to the next section.)

The average regeneration power (Pr) is the regeneration power produced in 1 cycle of operation [W].

$$P_r = (E_{g1} + E_{g2}) / T [W]$$

T: Operation cycle [s]

Vertical Axis

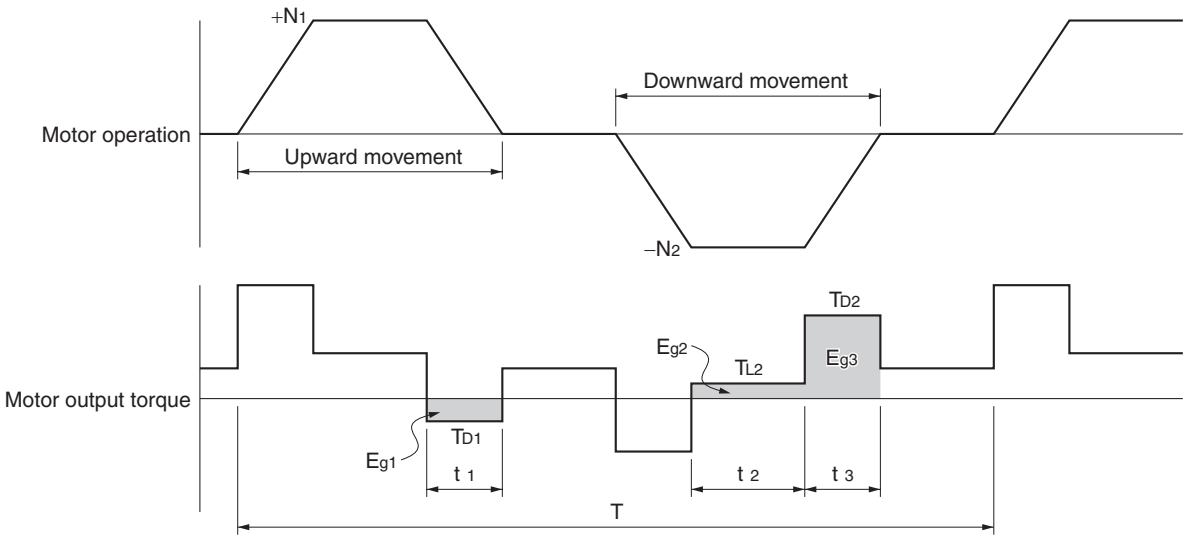

- In the output torque graph, acceleration in the forward direction (rising) is shown as positive, and acceleration in the reverse direction (falling) is shown as negative.

- The regenerative energy values in each region can be derived from the following equations.

$$\cdot E_{g1} = \frac{1}{2} \cdot \frac{2\pi}{60} \cdot N_1 \cdot T_{D1} \cdot t_1 \quad [J]$$

$$\cdot E_{g2} = \frac{2\pi}{60} \cdot N_2 \cdot T_{L2} \cdot t_2 \quad [J]$$

$$\cdot E_{g3} = \frac{1}{2} \cdot \frac{2\pi}{60} \cdot N_2 \cdot T_{D2} \cdot t_3 \quad [J]$$

N_1, N_2	: Rotation speed at start of deceleration	[r/min]
T_{D1}, T_{D2}	: Deceleration torque	[N·m]
T_{L2}	: Torque during downward movement	[N·m]
t_1, t_3	: Deceleration time	[s]
t_2	: Constant-speed driving time during downward movement	[s]

Note. Due to the loss of winding resistance, the actual regenerative energy will be approx. 90% of the values derived from these equations.

- For Servo Drive models with internal capacitors used for absorbing regenerative energy (i.e., Servo Drive models of 400 W or less), the values Eg_1 or $Eg_2 + Eg_3$ (unit: J) must be lower than the drive's regeneration absorption capacity. (The capacity depends on the model. For details, refer to the next section.)
- For Servo Drive models with an Internal Regeneration Resistor used for absorbing regenerative energy (i.e., models of 500 W or more), the average amount of regeneration Pr (unit: W) must be calculated, and this value must be lower than the drive's regeneration absorption capacity. (The capacity depends on the model.For details, refer to the next section.)

The average regeneration power (Pr) is the regeneration power produced in 1 cycle of operation [W].

$$P_r = (E_{g1} + E_{g2} + E_{g3}) / T \ [W]$$

T: Operation cycle [s]

Servo Drive Regeneration Absorption Capacity

Amount of Internal Regeneration Absorption in Servo Drives

This Servo Drive absorbs regenerative energy internally with built-in capacitors.
If the regenerative energy is too large to be processed internally, an overvoltage error occurs and operation cannot continue.
The following table shows the regenerative energy (and amount of regeneration) that each drive can absorb. If these values are exceeded, take the following processes.

- Connect an External Regeneration Unit. (Regeneration process capacity improves.)
- Reduce the operating rotation speed. (The amount of regeneration is proportional to the square of the rotation speed.)
- Lengthen the deceleration time. (Regenerative energy per unit time decreases.)
- Lengthen the operation cycle, i.e., the cycle time. (Average regenerative power decreases.)

Servo Drive model	Regenerative energy absorbable by built-in capacitor (J)	Internal regeneration resistor	Allowable minimum regeneration resistance (Ω)
		Average amount of regenerative energy absorbable (W)	
R88D-KTA5L	16	–	17
R88D-KT01L	16	–	17
R88D-KT02L	22	–	17
R88D-KT04L	32	17	13
R88D-KT01H	25	–	34
R88D-KT02H	25	–	34
R88D-KT04H	36	–	34
R88D-KT08H	62	12	25
R88D-KT10H	99	18	25
R88D-KT15H	99	18	25
R88D-KT20H	99	72	10
R88D-KT30H	150	60	7
R88D-KT50H	150	60	5
R88D-KT06F	128	21	100
R88D-KT10F	128	21	100
R88D-KT15F	128	21	100
R88D-KT20F	128	29	40
R88D-KT30F	285	60	40
R88D-KT50F	285	60	29

Regenerative Energy Absorption with an External Regeneration Resistor

If the regenerative energy exceeds the regeneration absorption capacity of the Servo Drive, connect an External Regeneration Resistor.
Connect the External Regeneration Resistor between B1 and B2 terminals on the Servo Drive. Double-check the terminal names when connecting the resistor because the drive may be damaged if connected to the wrong terminals.
The External Regeneration Resistor will heat up to approx. 120°C. Do not place it near equipment and wiring that is easily affected by heat. Attach radiator plates suitable for the heat radiation conditions.

External Regeneration Resistor

Characteristics

Model	Resistance value	Nominal capacity	Regeneration absorption for 120°C temperature rise	Heat radiation condition	Thermal switch output specifications
R88A-RR08050S	50 Ω	80 W	20 W	Aluminum 250 × 250, Thickness: 3.0	Operating temperature 150°C ± 5% NC contact Rated output: 30 VDC, – 50 mA max.
R88A-RR080100S	100 Ω	80 W	20 W	Aluminum 250 × 250, Thickness: 3.0	Operating temperature 150°C ± 5% NC contact Rated output: 30 VDC, – 50 mA max.
R88A-RR22047S	47 Ω	220 W	70 W	Aluminum 350 × 350, Thickness: 3.0	Operating temperature: 170 ± 7°C NC contact Rated output: 250 VAC, 0.2 A max.
R88A-RR50020S	20 Ω	500 W	180 W	Aluminum 600 × 600, Thickness: 3.0	Operating temperature 200 ± 7°C NC contact Rated output: 250 VAC, 0.2 A max. 24 VDC, 0.2 A max.

Connecting an External Regeneration Resistor

R88D-KTA5L/-KT01L/-KT02L/-KT01H/-KT02H/-KT04H

Normally B2 and B3 are open.
If an External Regeneration Resistor is necessary, remove the short-circuit bar between B2 and B3, and then connect the External Regeneration Resistor between B1 and B2 as shown in the diagram below.

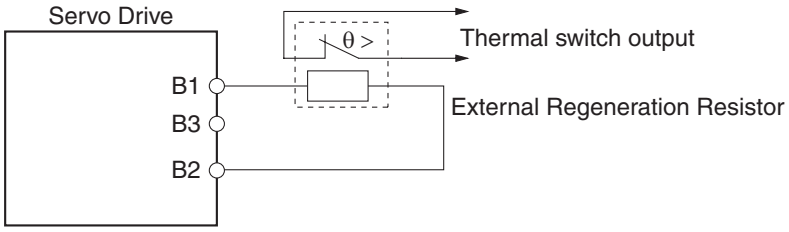

Precautions for Correct Use

- Connect the thermal switch output so that the main circuit power supply is shut OFF when the contacts open.
  When using multiple External Regeneration Resistors, connect each thermal switch in series.
  The resistor may be damaged by burning, or cause fire if it is used without setting up a power supply shutoff sequence using the output from the thermal switch.

R88D-KT04L/-KT08H/-KT10H/-KT15H/-KT20H/-KT30H/-KT50H/-KT06F/-KT10F/-KT15F/-KT20F/-KT30F/-KT50F

Normally B2 and B3 are connected.
If an External Regeneration Resistor is necessary, remove the short-circuit bar between B2 and B3, and then connect the External Regeneration Resistor between B1 and B2 as shown in the diagram below.

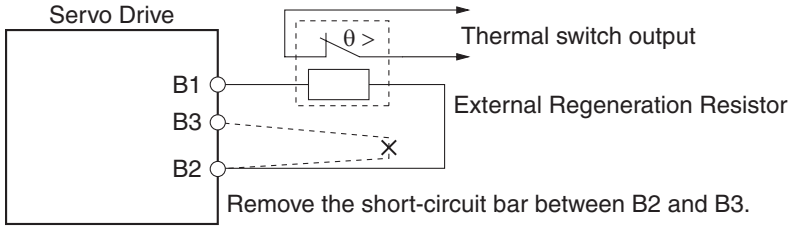

Precautions for Correct Use

- Connect the thermal switch output so that the main circuit power supply is shut OFF when the contacts open.
  When using multiple External Regeneration Resistors, connect each thermal switch in series.
  The resistor may be damaged by burning, or cause fire if it is used without setting up a power supply shutoff sequence using the output from the thermal switch.

Combining External Regeneration Resistors

Regeneration absorption capacity *1	20 W	40 W	70 W	140 W
Model	R88A-RR08050S R88A-RR080100S	R88A-RR08050S R88A-RR080100S	R88A-RR22047S	R88A-RR22047S
Resistance value *2	50 Ω/100 Ω	25 Ω/50 Ω	47 Ω	94 Ω
Connection method		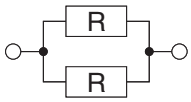		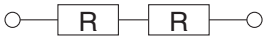

Regeneration absorption capacity *1	140 W	280 W	560 W
Model	R88A-RR22047S	R88A-RR22047S	R88A-RR22047S
Resistance value *2	23.5 Ω	47 Ω	23.5 Ω
Connection method	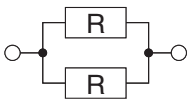	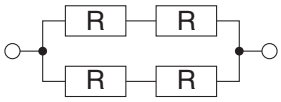	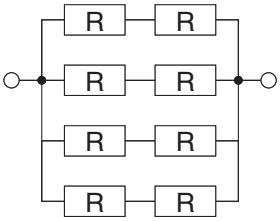

Regeneration absorption capacity *1	180 W	360 W	1440 W
Model	R88A-RR50020S	R88A-RR50020S	R88A-RR50020S
Resistance value *2	20 Ω	10 Ω	10 Ω
Connection method		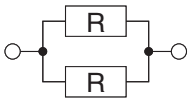	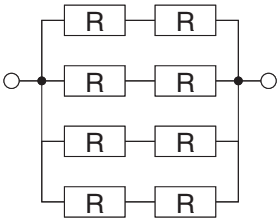

*1. Select a combination that has an absorption capacity greater than the average regeneration power (Pr).

*2. Do not use a combination with resistance values lower than the minimum external regeneration resistance of each drive. For information on the minimum external regeneration resistance, refer to "Servo Drive Regeneration Absorption Capacity"(P.4-37).

Precautions for Safe Use

- Surface temperatures on regeneration resistance can reach 200°C.
  Do not place objects that tend to catch fire nearby. To prevent people from touching them, install a cover that enables heat dissipation.

5

Basic Control Mode

This chapter explains an outline of operations available in various control modes and explains the contents of setting.

5-1 Position Control 5-1
- Outline of Operation 5-1
- Parameters Requiring Settings 5-2
- Related Functions 5-5
- Parameter Block Diagram for Position Control Mode 5-6

5-2 Speed Control 5-7
- Outline of Operation 5-7
- Parameters Requiring Settings 5-7
- Related Functions 5-12
- Parameter Block Diagram for Speed Control Mode 5-13

5-3 Torque Control 5-14
- Outline of Operation 5-14
- Parameters Requiring Settings 5-14
- Related Functions 5-17
- Parameter Block Diagram for Torque Control Mode 5-18

5-4 Internally Set Speed Control 5-19
- Outline of Operation 5-19
- Parameters Requiring Settings 5-19

5-5 Switching Control 5-22
- Outline of Operation 5-22
- Parameters Requiring Settings 5-22
- Related Functions 5-24

5-6 Fully-closed Control 5-25
- Outline of Operation 5-25
- Parameters Requiring Settings 5-26
- Parameter Block Diagram for Fully-closed Control Mode 5-33

5-1 Position Control

Outline of Operation

- Position control is performed based on the pulse train input received from the controller.
- The motor rotates using the value of the pulse train input multiplied by the Electronic Gear (Pn008 to Pn010).

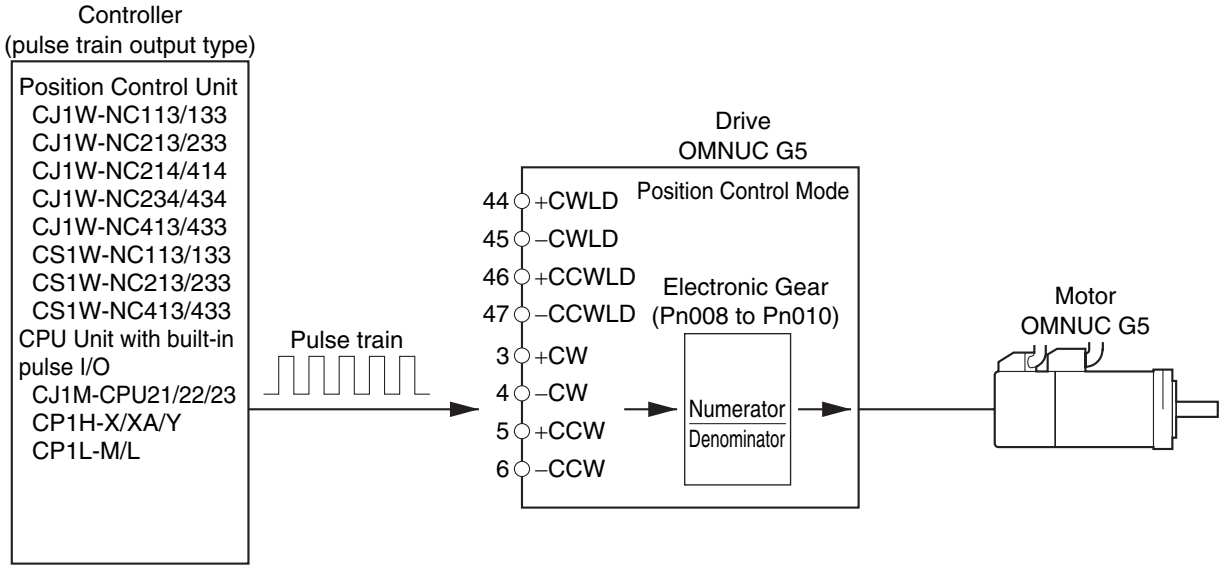

Parameters Requiring Settings

Parameter number	Parameter name	Explanation	Reference
Pn000	Reference Direction	Select the relation between the reference command and the rotation direction in the motor.	P.8-1
Pn001	Control Mode Selection	Select the control mode.	P.8-1
Pn005	Command Pulse Input Selection	Select the command pulse input terminal.	P.8-3
Pn006	Command Pulse Rotation Direction Switching Selection	Set the count direction for the command pulse input.	P.8-3
Pn007	Command Pulse Mode Selection	Set the count method for the command pulse input.	P.8-4
Pn008	Electronic Gear Integer Setting	Define the number of command pulses per motor revolution. If this is zero, Pn009 and Pn010 become active.	P.8-5
Pn009	Electronic Gear Ratio Numerator 1	Set the numerator of the electronic gear ratio for the command pulse input.	P.8-5
Pn010	Electronic Gear Ratio Denominator	Set the denominator of the electronic gear ratio for the command pulse input.	P.8-5

Control Mode Selection (Pn001)

Select the position control (Set values: 0=Position control, 3=Switch between position control and speed control or 4=Switch between position control and torque control).

Command Pulse Input Process (Pn005, Pn006, Pn007)

Position command input terminals are classified into the input 1 system (+CW, -CW, +CCW, -CCW) and input 2 system (+CWLD, -CWLD, +CCWLD, -CCWLD).

If the position command output is a line-driver output, set input 1. If it is an open collector output, set input 2. Although input 2 can also be used for a line-driver output, the allowable maximum input frequency will become lower than when input 1 is selected.

Parameter number	Parameter name	Explanation	Setting range	Unit
Pn005	Command Pulse Input Selection	Select the command pulse input terminal. 0: Photocoupler input (+CW, -CW, +CCW, -CCW) 1: Input for line driver only (+CWLD, -CWLD, +CCWLD, -CCWLD)	0 or 1	–
Pn006	Command Pulse Rotation Direction Switching Selection	Set the count direction for the command pulse input. 0: Command pulse, forward direction 1: Command pulse, reverse direction	0 or 1	–
Pn007	Command Pulse Mode Selection	Set the count method for the command pulse input. 0: 90° phase difference (A/B) signal input) 1: Forward/reverse pulse 2: 90° phase difference (A/B) signal input) 3: Feed pulse/direction signal	0 to 3	–

The settings for command pulse rotation direction and command pulse mode are as follows.

Pn006	Pn007	Command pulse pattern	Signal name	Forward direction command	Reverse direction command
0	0 or 2	90° phase difference, 2-phase pulse (phase A + phase B)	CW CCW	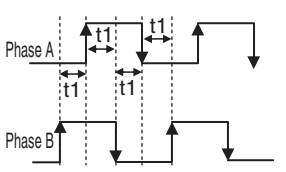 Phase B is 90° ahead of phase A.	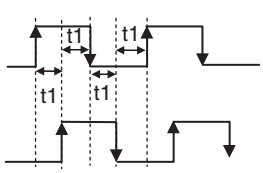 Phase B is 90° behind phase A.
	1	Forward direction pulse train + Reverse direction pulse train	CW CCW	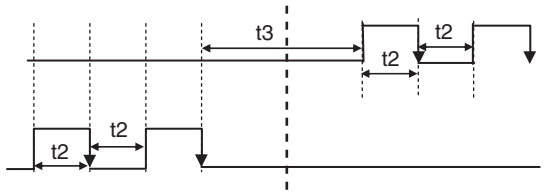	
	3	Pulse train + Sign	CW CCW	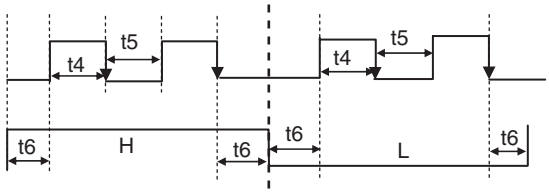	
1	0 or 2	90° phase difference, 2-phase pulse (phase A + phase B)	CW CCW	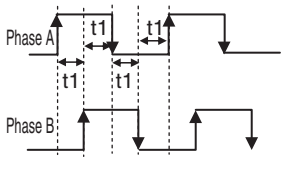 Phase B is 90° behind phase A.	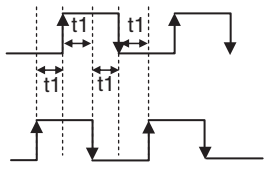 Phase B is 90° ahead of phase A.
	1	Forward direction pulse train + Reverse direction pulse train	CW CCW	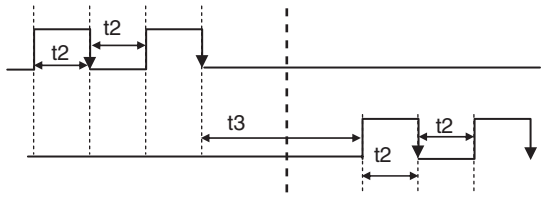	
	3	Pulse train + Sign	CW CCW	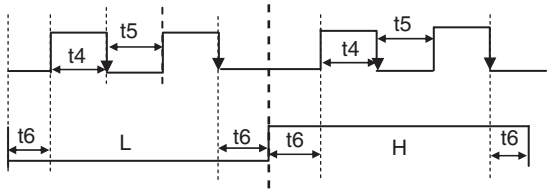	

Symbol		Allowable input maximum frequency	Minimum required duration [μs]					
			t1	t2	t3	t4	t5	t6
+CWLD, -CWLD, +CCWLD, -CCWLD		4 Mpps	0.25	0.125	0.125	0.125	0.125	0.125
+CW, -CW, +CCW, -CCW	Line driver	500 kpps	2	1	1	1	1	1
	Open collector	200 kpps	5	2.5	2.5	2.5	2.5	2.5

Electronic Gear Function (Pn008, Pn009, Pn010)

This function allows you to multiply the pulse command input from the host controller by the specified gear ratio to determine the position command.

Parameter number	Parameter name	Explanation	Setting range	Unit
Pn008	Electronic Gear Integer Setting	Set the number of command pulses corresponding to 1 motor rotation.	0 to 2^{20}	Pulse
Pn009	Electronic Gear Ratio Numerator 1	Set the numerator of the electronic gear ratio for the command pulse input.	0 to 2^{30}	–
Pn010	Electronic Gear Ratio Denominator	Set the denominator of the electronic gear ratio for the command pulse input.	1 to 2^{30}	–

♦ For details on the electronic gear function, refer to "6-4 Electronic Gear Function"(P.6-10).

Related Functions

Parameter number	Parameter name	Explanation	Reference
Pn008	Electronic Gear Integer Setting	Set the number of command pulses corresponding to 1 motor rotation.	P.8-5
Pn011	Encoder Dividing Numerator	Set the pulse output resolution using the numbers of output pulses per rotation for OA and OB, respectively.	P.8-6
Pn012	Encoder Output Direction Switching Selection	Set the phase-B logic and output source for pulse output.	P.8-6
Pn222	Position Command Filter Time Constant	Set the time constant of the first-order lag filter for the position command.	P.8-23
Pn223	Smoothing Filter Time Constant	Set the time constant of the FIR filter for the position command.	P.8-24
Pn431	Positioning Completion Range 1	Set the threshold of position error for output of the positioning completion signal.	P.8-41
Pn432	Positioning Completion Condition Selection	Select the condition under which the positioning completion signal is output.	P.8-42
Pn433	Positioning Completion Hold Time	Set the INP signal output time.	P.8-41
Pn503	Encoder Dividing Denominator	You can set a dividing ratio by using Encoder Dividing Numerator (Pn011) as the dividing numerator and Encoder Dividing Denominator (Pn503) as the dividing denominator.	P.8-47
Pn517	Error Counter Reset Condition Selection	Set the reset condition under which the error counter reset input signal.	P.8-54
Pn518	Command Pulse Prohibition Input Setting	Set whether to enable or disable the command pulse prohibition input.	P.8-55

Parameter Block Diagram for Position Control Mode

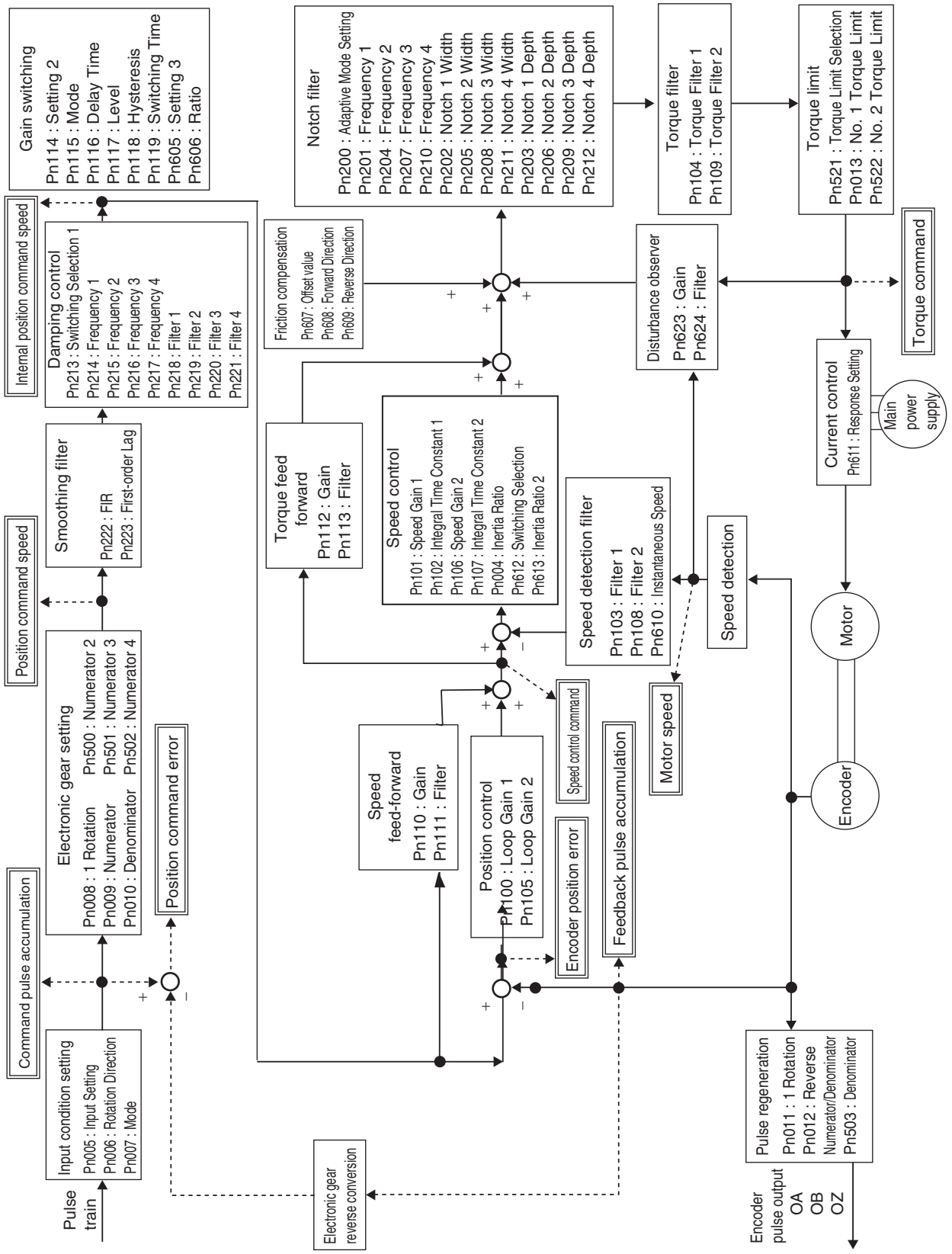

5-2 Speed Control

Outline of Operation

- Motor speed control is performed based on the analog voltage input from the controller. You can also perform position control by combining with a controller that has a position control function.
- You can change the relation between the speed command and the rotation speed by setting the Speed Command Scale (Pn302).

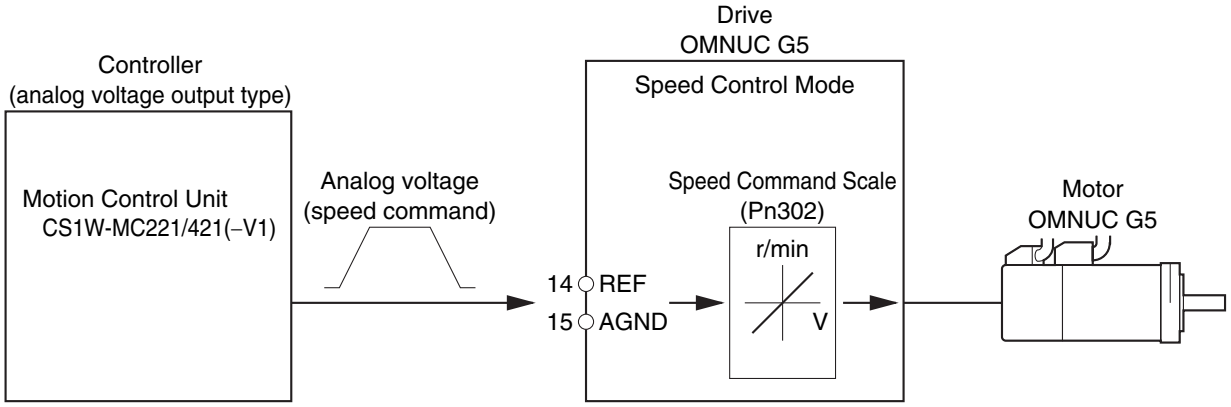

Parameters Requiring Settings

Parameter number	Parameter name	Explanation	Reference
Pn000	Reference direction	Select the relation between the reference command and the rotation direction in the motor.	P.8-1
Pn001	Control Mode Selection	Select the control mode.	P.8-1
Pn300	Command Speed Selection	Select the speed command input method.	P.8-25
Pn301	Speed Command Direction Selection	Set the method for designating the forward or reverse direction for the speed command.	P.8-25
Pn302	Speed Command Scale	Set the input gain for the analog speed command input.	P.8-26
Pn303	Analog Speed Command Rotation Direction Switching	Inverts the polarity of the analogue speed command.	P.8-26
Pn312	Soft Start Acceleration Time	Set the acceleration time for internally set speed control. Set the time until 1,000 r/min is reached.	P.8-27
Pn313	Soft Start Deceleration Time	Set the deceleration time for internally set speed control. Set the time until 1,000 r/min is reached.	P.8-28
Pn314	S-curve Acceleration/ Deceleration Time Setting	Set the S-curve time in the time width centered on the inflection points for acceleration and deceleration.	P.8-28

Control Mode Selection (Pn001)

Select the speed control (Set values: 1=Speed control, 3=Switching between position and speed control or 5=Switching between speed control and torque control).

Analog Speed Command Input Process (Pn300, Pn301, Pn302, Pn303)

Convert the voltage input by an analog input to a speed command to control the motor.

Parameter number	Parameter name	Explanation	Setting range	Unit
Pn300	Command Speed Selection	Select the speed command input method. 0: Analog torque command 1: No. 1 to 4 internally set speed 2: No. 1 to 3 internally set speed, analog torque command 3: No. 1 to 8 internally set speed	0 to 3	–
Pn301	Speed Command Direction Selection	Select the method for designating the direction for the speed command. 0: Use the sign of the speed command Example: +: Forward –: Reverse 1: Use the speed command sign selection (VSIGN) Example: OFF: Forward ON: Reverse	0 or 1	–
Pn302	Speed Command Scale	Set the input gain for the analog speed command input.	10 to 2000	(r/min)/V
Pn303	Analog Speed Command Rotation Direction Switching	Set to reverse the polarity of the speed command input. 0: Counterclockwise when viewed from the end of the shaft for positive commands 1: Clockwise when viewed from the end of the shaft for positive commands	0 or 1	–

The conversion of analog speed command is explained below.

Command Speed Selection (Pn300)	Speed Command Direction Selection (Pn301)	Analog Speed Command Rotation Direction Switching (Pn303)	Analog speed command (REF)	Speed command sign selection (VSIGN)	Motor rotation direction	Conversion graph
0	0	0	+Voltage (0 to 10 V)	Not affected	Forward direction	Figure A
			-Voltage (-10 to 0 V)	Not affected	Reverse direction	
		1	+Voltage (0 to 10 V)	Not affected	Reverse direction	Figure B
			-Voltage (-10 to 0 V)	Not affected	Forward direction	
	1	Not affected	+Voltage (0 to 10 V)	OFF	Forward direction	Figure C
		Not affected	-Voltage (-10 to 0 V)			
		Not affected	+Voltage (0 to 10 V)	ON	Reverse direction	
		Not affected	-Voltage (-10 to 0 V)			

Example) When Speed Command Scale (Pn302) = 500

Speed limit value = Speed Command Scale (Pn302) × input voltage

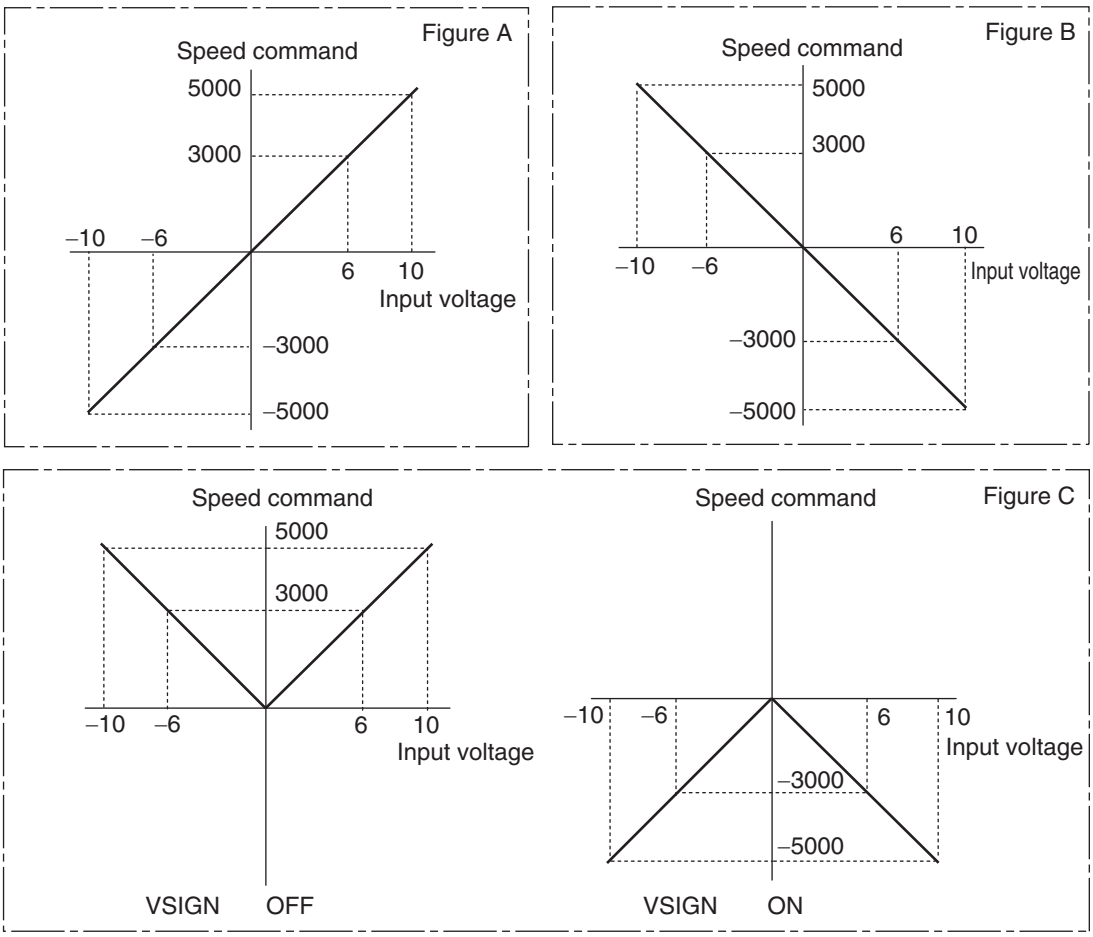

Speed Command Acceleration/Deceleration Setting Function (Pn312, Pn313, Pn314)

With a step speed command, you can change the speed command based on this setting to reduce the shock caused by change in acceleration.

Parameter number	Parameter name	Explanation	Setting range	Unit
Pn312	Soft Start Acceleration Time	Set the acceleration time for acceleration process with respect to the speed command input.	0 to 10000	ms/(1,000 r/min)
Pn313	Soft Start Deceleration Time	Set the deceleration processing deceleration time for speed command inputs.	0 to 10000	ms/(1,000 r/min)
Pn314	S-curve Acceleration/ Deceleration Time Setting	Set the S-curve acceleration/ deceleration time.	0 to 1000	ms

Soft Start Acceleration Time (Pn312), Soft Start Deceleration Time (Pn313)

If a step speed command is input, set in Soft Start Acceleration Time (Pn312) the time needed for the speed command to reach 1,000 r/min. Also set in Soft Start Deceleration Time (Pn313) the time needed for the speed command to reach 0 r/min from 1,000 r/min.

Soft start acceleration time [ms] = Vc/1,000 × Pn312 × 1 ms
Soft start deceleration time [ms] = Vc/1,000 × Pn313 × 1 ms

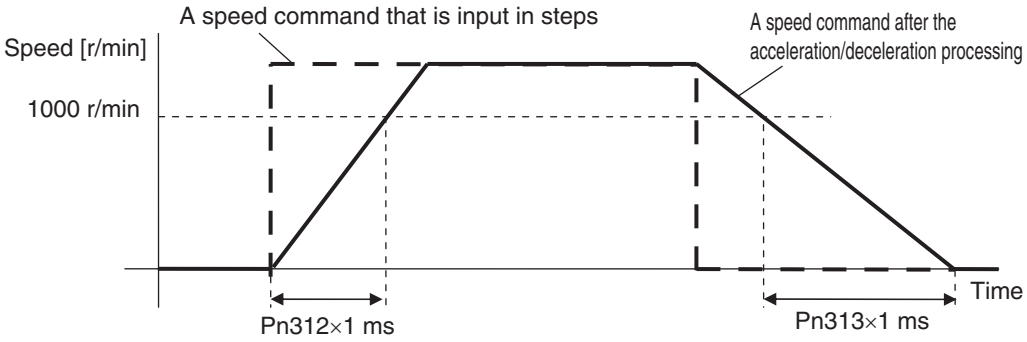

S-curve Acceleration/Deceleration Time Setting (Pn314)

Set the S-curve time in the time width centered on the inflection points in acceleration/deceleration relative to the acceleration or deceleration time set in Soft Start Acceleration Time (Pn312) or Soft Start Deceleration Time (Pn313).

ta = Vc/1,000 × Pn312 × 1 ms
td = Vc/1,000 × Pn313 × 1 ms
ts = Pn314 × 1 ms

Set an appropriate time so that ta > ts and td > ts are satisfied.

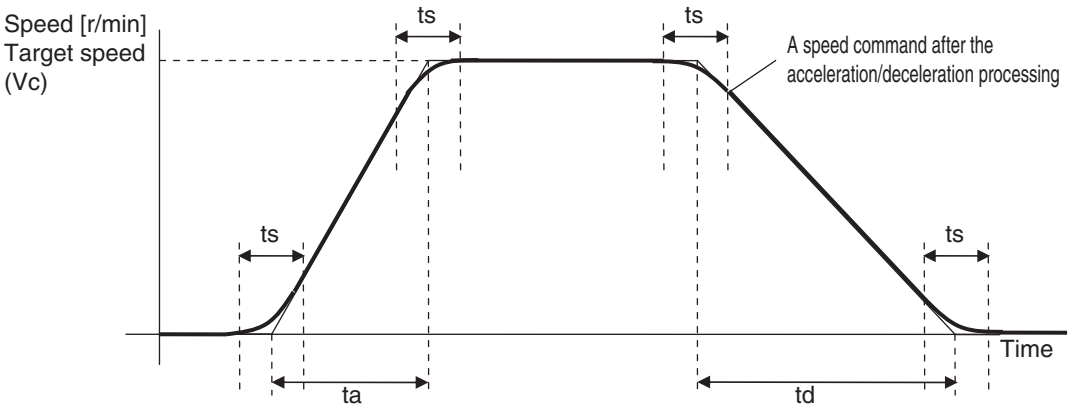

Related Functions

Parameter number	Parameter name	Explanation	Reference
Pn315	Zero Speed Designation Selection	Set the zero speed designation.	P.8-28
Pn316	Speed Lock Level Setting	Set the threshold for transition to the servo lock state under position control.	P.8-30
Pn435	Speed Conformity Detection Range	Set the detection threshold for speed conformity output. If the difference between the speed command and motor speed is within the set threshold, a speed conformity output is output. This setting has a hysteresis of 10 r/min for detection.	P.8-43
Pn436	Rotation Speed for Motor Rotation Detection	Set the detection threshold for speed reached output. A speed reached output is output when the motor speed exceeds the set value. This setting has a hysteresis of 10 r/min for detection.	P.8-43
Pn422	Analog Input 1 Offset	Set the analog input 1 offset.	P.8-39
Pn423	Analog Input 1 Filter Time Constant	Set the filter for analog input 1.	P.8-40

Parameter Block Diagram for Speed Control Mode

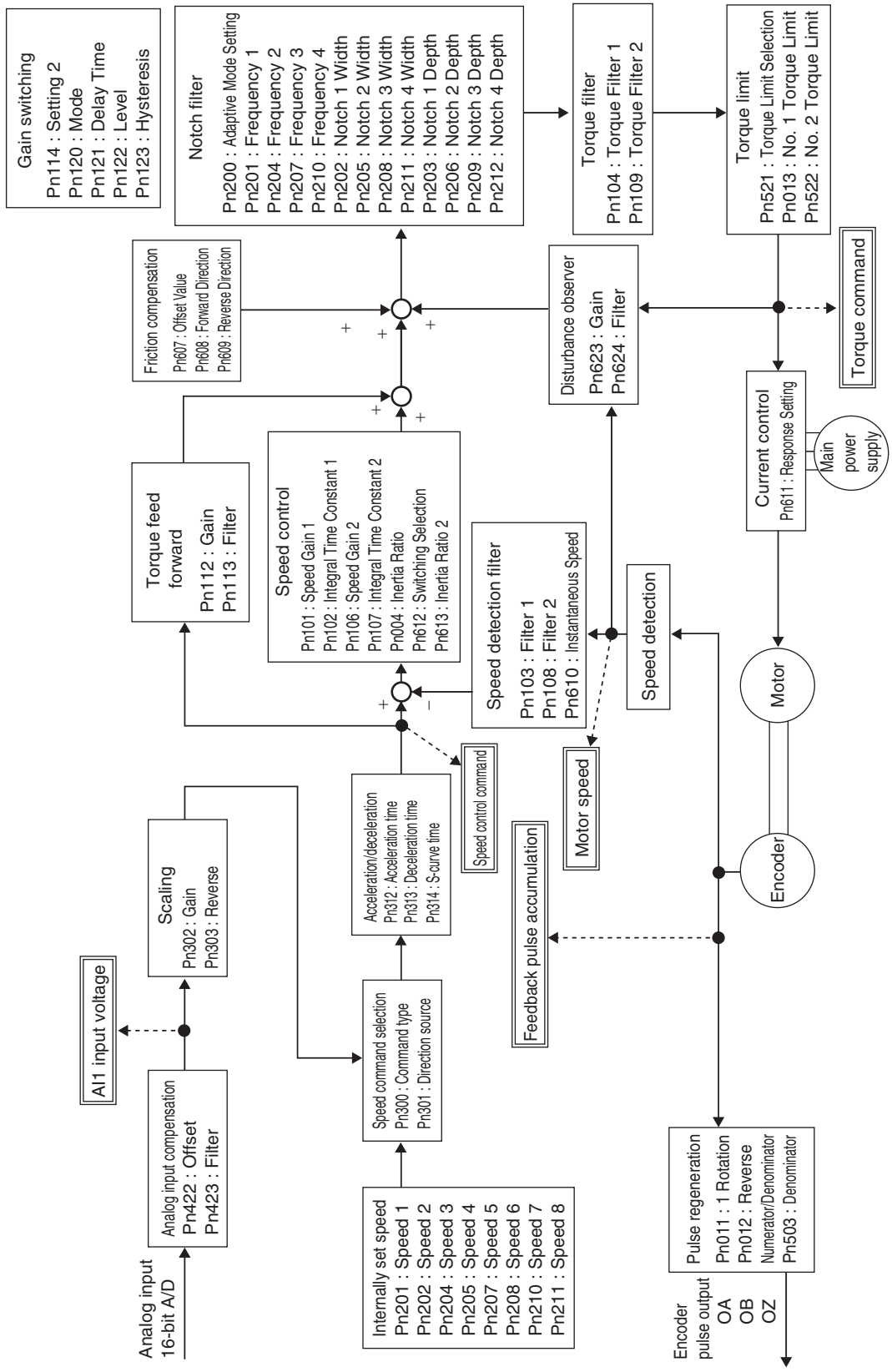

5-3 Torque Control

Torque control is performed based on the torque command specified by the analog voltage. In addition to the torque command, torque control also requires a speed limit input to prevent the motor rotation speed from becoming excessively high.

Outline of Operation

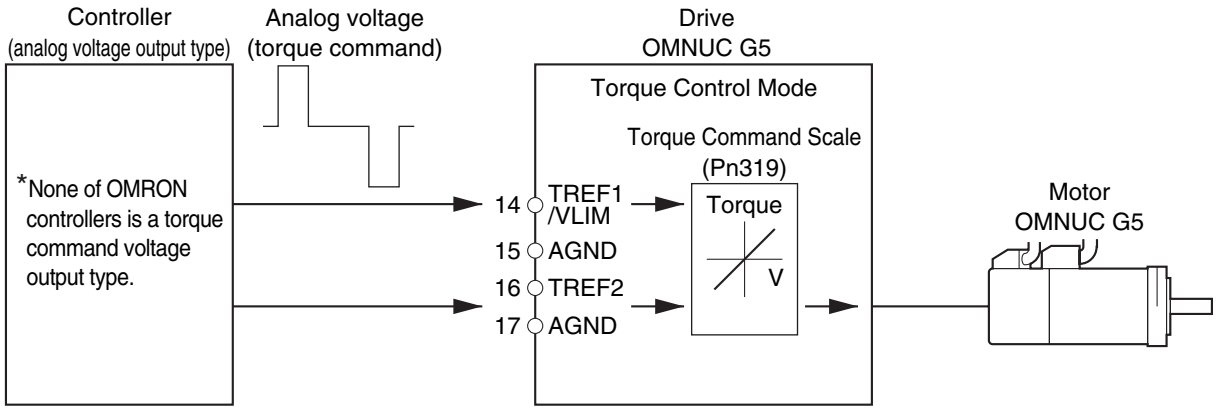

Precautions for Correct Use

- If the motor speed is limited by the speed limit, the motor speed will be limited and will not reach the speed corresponding to the analog torque command.

Parameters Requiring Settings

Parameter number	Parameter name	Explanation	Reference
Pn001	Control Mode Selection	Select the control mode.	P.8-1
Pn317	Torque Command/Speed Limit Selection	Select the input location for the torque command and speed limit.	P.8-30
Pn318	Torque Command Direction Selection	Select the rotation direction of the torque command.	P.8-31
Pn319	Torque Command Scale	Set the input gain for analog torque command input.	P.8-32
Pn320	Analog Torque Command Rotation Direction Switching	Reverse the polarity of the torque command input.	P.8-32

Control Mode Selection (Pn001)

Select the torque control (Set values: 2=Torque control, 4=Switching between Position control and Torque control or 5=Switching between Speed control and torque control).

Analog Torque Command Input Process (Pn317, Pn318, Pn319, Pn320)

Convert the voltage input by an analog input to a torque command to control the motor.

Parameter number	Parameter name	Explanation	Setting range	Unit
Pn317	Torque Command/Speed Limit Selection	Select the input location for the torque command and speed limit value. 0: Torque command: Analog input 1 speed limit: Pn321 1: Torque command: Analog input 2 speed limit: Analog input 1 2: Torque command: Analog input 1 speed limit: Pn321, Pn322	0 to 2	–
Pn318	Torque Command Direction Selection	Select the method for selecting the direction for the torque command. 0: Use the sign 1: Use TVSIGN	0 or 1	–
Pn319	Torque Command Scale	Set the input gain for analog torque command input.	10 to 100	0.1 V/100%
Pn320	Analog Torque Command Rotation Direction Switching	Reverse the polarity of the torque command input. 0: Forward operation 1: Reverse operation	0 or 1	–

The conversion of analog torque command is explained below.

Torque Command/Speed Limit Selection (Pn317)	Torque Command Direction Selection (Pn318)	Analog Torque Command Rotation Direction Switching (Pn320)	Analog torque command (TREF)	Torque command sign input (TSIGN)	Motor rotation direction	Conversion graph
0	0	0	+Voltage (0 to 10 V)	Not affected	Forward direction	Figure A
			-Voltage (-10 to 0 V)	Not affected	Reverse direction	
		1	+Voltage (0 to 10 V)	Not affected	Reverse direction	Figure B
			-Voltage (-10 to 0 V)	Not affected	Forward direction	
	1	Not affected	+Voltage (0 to 10 V)	OFF	Forward direction	Figure C
		Not affected	-Voltage (-10 to 0 V)			
		Not affected	+Voltage (0 to 10 V)	ON	Reverse direction	
		Not affected	-Voltage (-10 to 0 V)			

Example) When the torque command scale is 30

Torque command = 100 × Input voltage / (Torque Command Scale (Pn302) × 0.1)

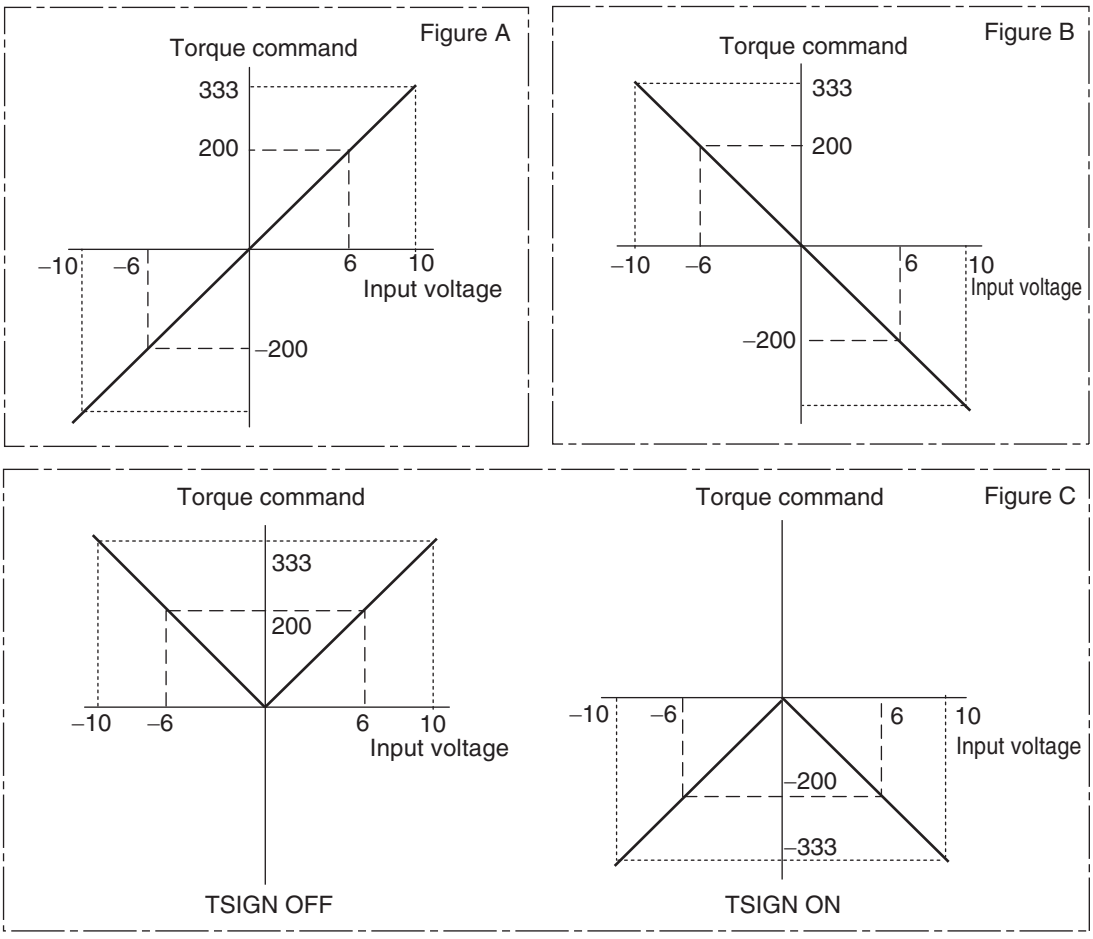

Related Functions

Parameter number	Parameter name	Explanation	Reference
Pn315	Zero Speed Designation Selection	Set the zero speed designation function.	P.8-28
Pn321	Speed Limit Value Setting	Set the speed limit value applicable during torque control. During torque control, the speed is controlled so as not to exceed the level set by the speed limit value.	P.8-32
Pn322	Reverse Direction Speed Limit Value Setting	Set this if you want to change the speed limit value depending on whether the direction is forward or reverse.	P.8-33
Pn422	Analog Input 1 Offset	Set the offset for analog input 1.	P.8-39
Pn423	Analog Input 1 Filter Time Constant	Set the filter for analog input 1.	P.8-40
Pn425	Analog Input 2 Offset	Set the offset for analog input 2.	P.8-40
Pn426	Analog Input 2 Filter Time Constant	Set the filter for analog input 2.	P.8-40

Parameter Block Diagram for Torque Control Mode

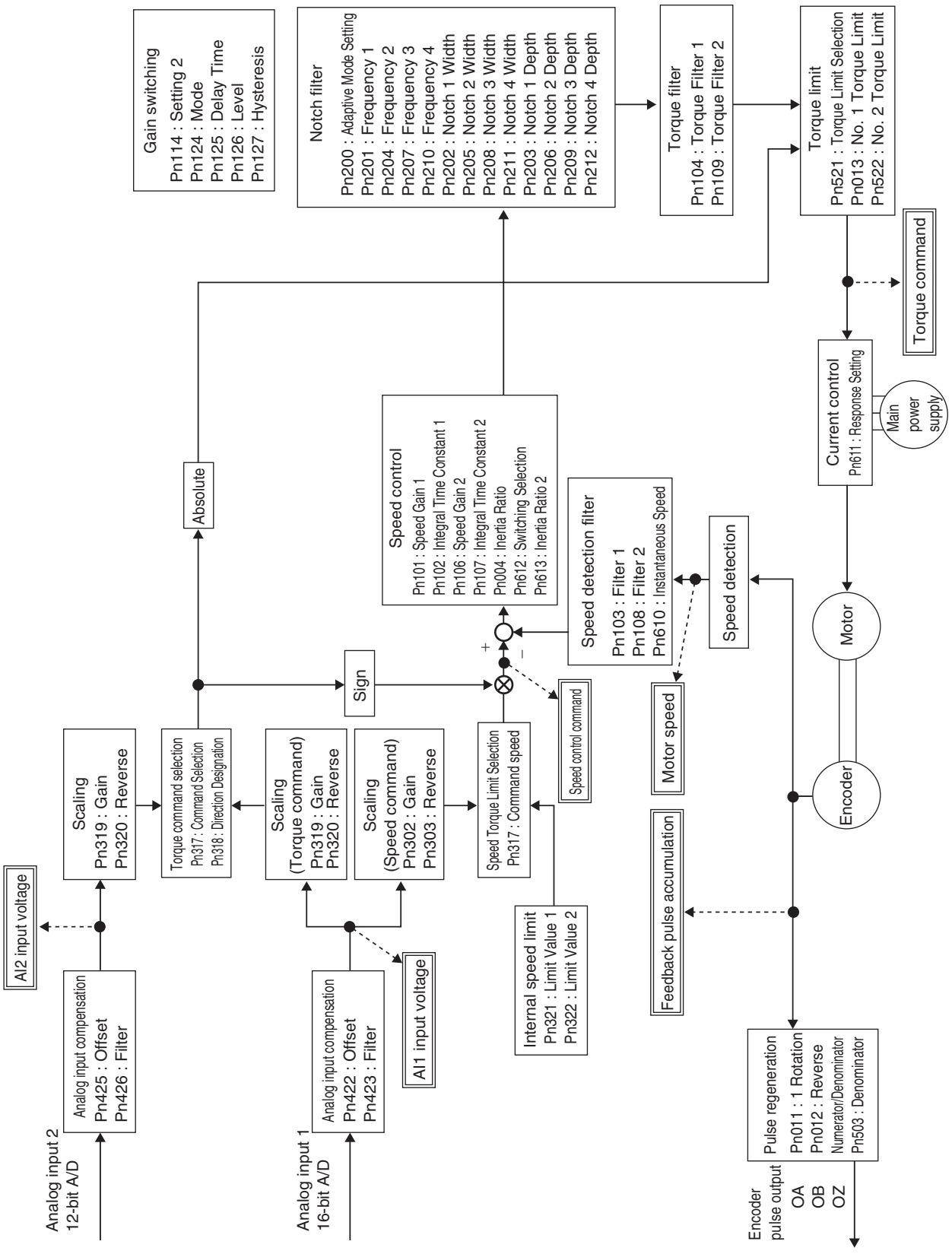

5-4 Internally Set Speed Control

Outline of Operation

- Performs motor speed control using the speeds set in the No. 1 to 8 Internally Speed Settings.
- Select the internally set speed using Internally Set Speed Selections 1 to 3 of the control input terminals (VSEL1: CN-1 to 33 pins, VSEL2: CN-1 to 30 pins, VSEL3: CN-1 to 28 pins).

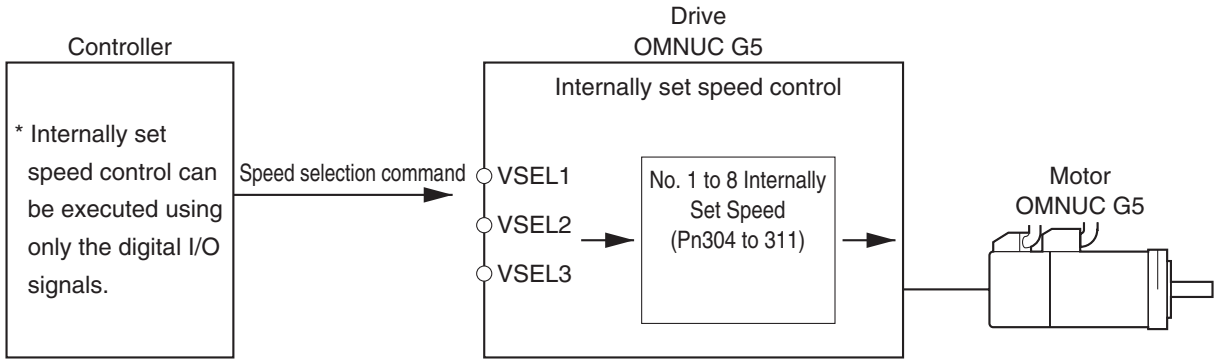

Parameters Requiring Settings

Parameter number	Parameter name	Explanation	Reference
Pn001	Control Mode Selection	Select the control mode for internally set speed control. (Set values: 1, 3 and 5)	P.8-1
Pn300	Command Speed Selection	Select the speed command input method.	P.8-25
Pn304	No. 1 Internally Set Speed	Set the internally set speeds (r/min). The settings can be made from -20,000 to 20,000 r/min. Be sure to set the speeds within the allowable range of rotation speed of the motor.	P.8-26
Pn305	No. 2 Internally Set Speed		
Pn306	No. 3 Internally Set Speed		
Pn307	No. 4 Internally Set Speed		
Pn308	No. 5 Internally Set Speed		
Pn309	No. 6 Internally Set Speed		
Pn310	No. 7 Internally Set Speed		
Pn311	No. 8 Internally Set Speed		

Selecting the Internally Set Speeds

The following tables show the internally set speeds that are set with VSEL1, VSEL2 and VSEL3 (internally set speed selection 1, 2 and 3).

Pn300 = 1

Number	VSEL1	VSEL2	VSEL3	Set speed
0	OFF	OFF	Disabled	Pn304
1	ON	OFF	Disabled	Pn305
2	OFF	ON	Disabled	Pn306
3	ON	ON	Disabled	Pn307

Pn300 = 2

Number	VSEL1	VSEL2	VSEL3	Set speed
0	OFF	OFF	Disabled	Pn304
1	ON	OFF	Disabled	Pn305
2	OFF	ON	Disabled	Pn306
3	ON	ON	Disabled	*1

*1. The mode will be analog speed control.
Input the proper current to REF.

Pn300 = 3

Number	VSEL1	VSEL2	VSEL3	Set speed
0	OFF	OFF	OFF	Pn304
1	ON	OFF	OFF	Pn305
2	OFF	ON	OFF	Pn306
3	ON	ON	OFF	Pn307
4	OFF	OFF	ON	Pn308
5	ON	OFF	ON	Pn309
6	OFF	ON	ON	Pn310
7	ON	ON	ON	Pn311

Operation Example

- Internally set speed control with 4 speed changes when Pn300 = 1

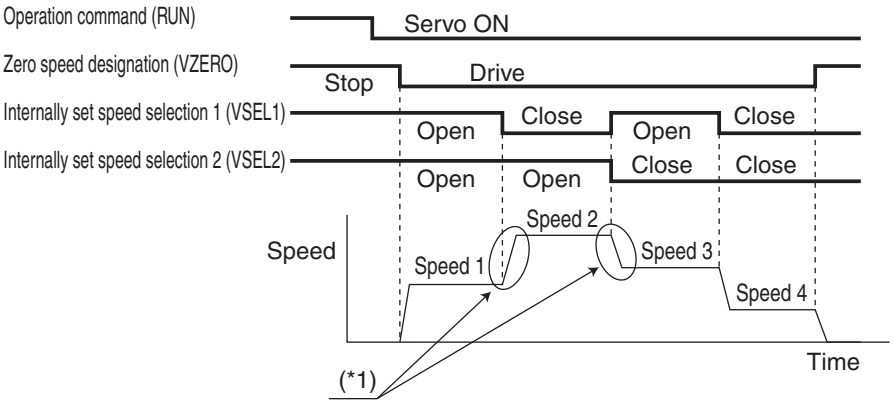

*1. The acceleration time, deceleration time, and S-curve acceleration/deceleration time can be set using parameters (Pn312, Pn313, and Pn314).

Internal Speed Command (Pn304 to 311)

Control the motor speed according to the internal speed command value set by a parameter. The internally set speed becomes valid when the setting of Speed Setting Internal/External Switching is 1 to 3.
Up to 8 internally set speeds can be set.

Parameter number	Parameter name	Explanation	Setting range	Unit
Pn304	No. 1 Internally Set Speed	Set the speed 1 internally set speed.	-20,000 to 20,000	r/min
Pn305	No. 2 Internally Set Speed	Set the speed 2 internally set speed.	-20,000 to 20,000	r/min
Pn306	No. 3 Internally Set Speed	Set the speed 3 internally set speed.	-20,000 to 20,000	r/min
Pn307	No. 4 Internally Set Speed	Set the speed 4 internally set speed.	-20,000 to 20,000	r/min
Pn308	No. 5 Internally Set Speed	Set the speed 5 internally set speed.	-20,000 to 20,000	r/min
Pn309	No. 6 Internally Set Speed	Set the speed 6 internally set speed.	-20,000 to 20,000	r/min
Pn310	No. 7 Internally Set Speed	Set the speed 7 internally set speed.	-20,000 to 20,000	r/min
Pn311	No. 8 Internally Set Speed	Set the speed 8 internally set speed.	-20,000 to 20,000	r/min

5-5 Switching Control

Outline of Operation

- This function controls the motor by switching between two control modes via external inputs.
- The control mode switching is performed by the control mode switching input (TVSEL: CN-1 pin 32).

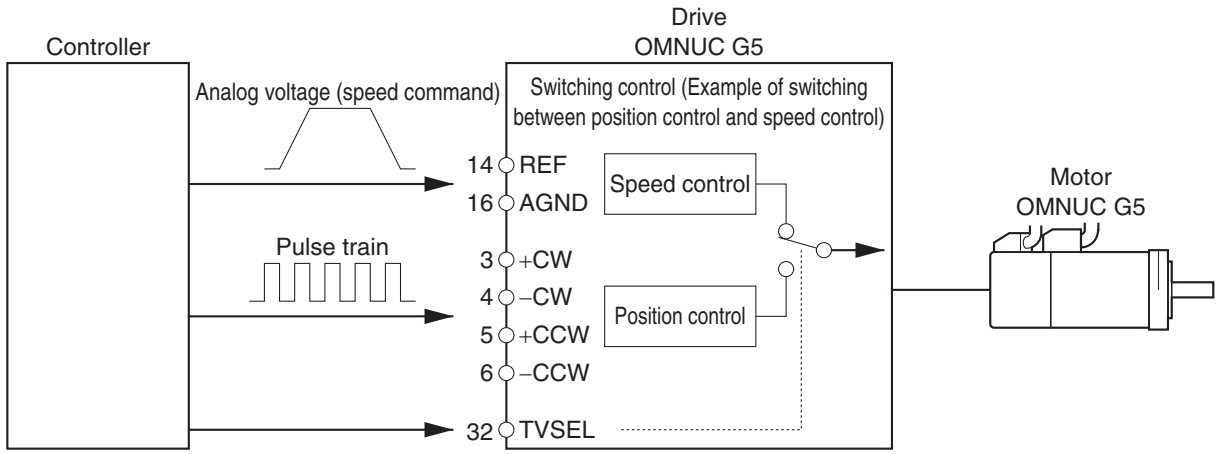

Parameters Requiring Settings

Parameter number	Parameter name	Explanation	Reference
Pn001	Control Mode Selection	Select control mode for switching control. (Set values: 3, 4 and 5)	P.8-1

Control Mode Selected by TVSEL (Control Mode Switching Input)

- The following table shows the relation between TVSEL (control mode switching input) and the control mode selected.

Control Mode Selection (Pn001) setting	TVSEL	
	OFF	ON
3	Position control	Speed control
4	Position control	Torque control
5	Speed control	Torque control

Note. Use caution when switching control mode. Operation may change suddenly depending on the control mode settings.

Operation Example

Position and Speed Control Switching Example (Pn001 = 3)

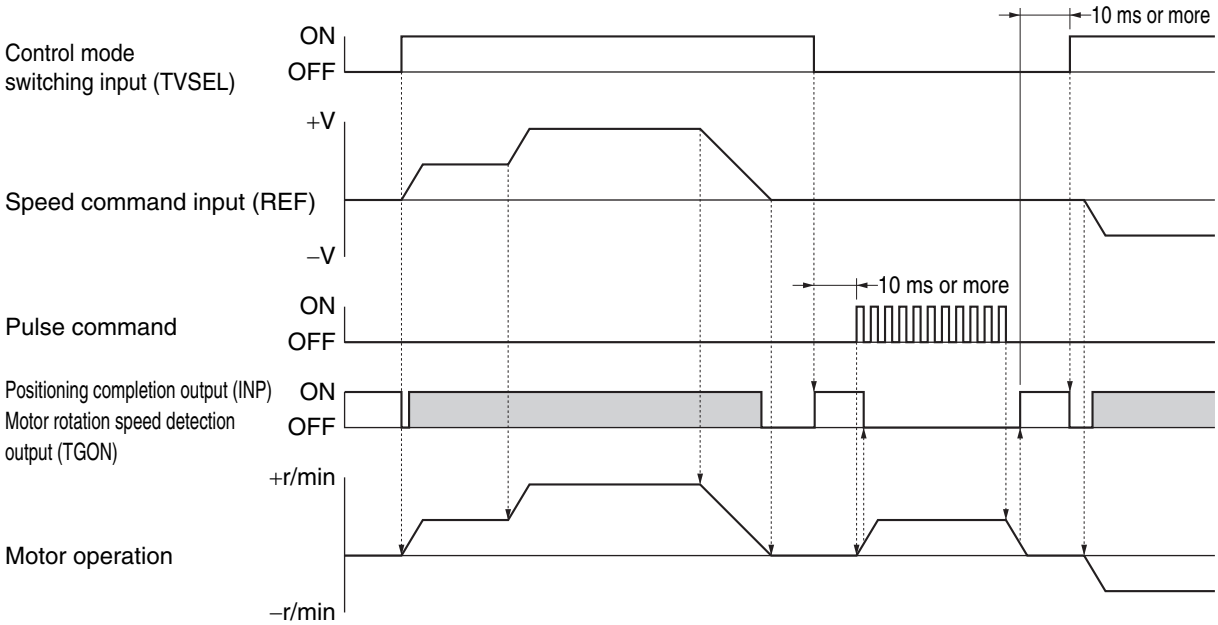

- There is a maximum delay of 10 ms in reading the input signal.
- When switching from speed control to position control, turn OFF the control mode switching input (TVSEL) and wait at least 10 ms after the positioning completion output (INP) turns ON before inputting the pulse command. The pulses input before INP turns ON will be ignored.
- The shaded areas for the positioning completion output (INP) in the time chart show that the signal is turned ON as the motor rotation speed detection output (TGON). (The meaning of the signal depends on the control mode.)

Position and Torque Control Switching Example (Pn001 = 4)

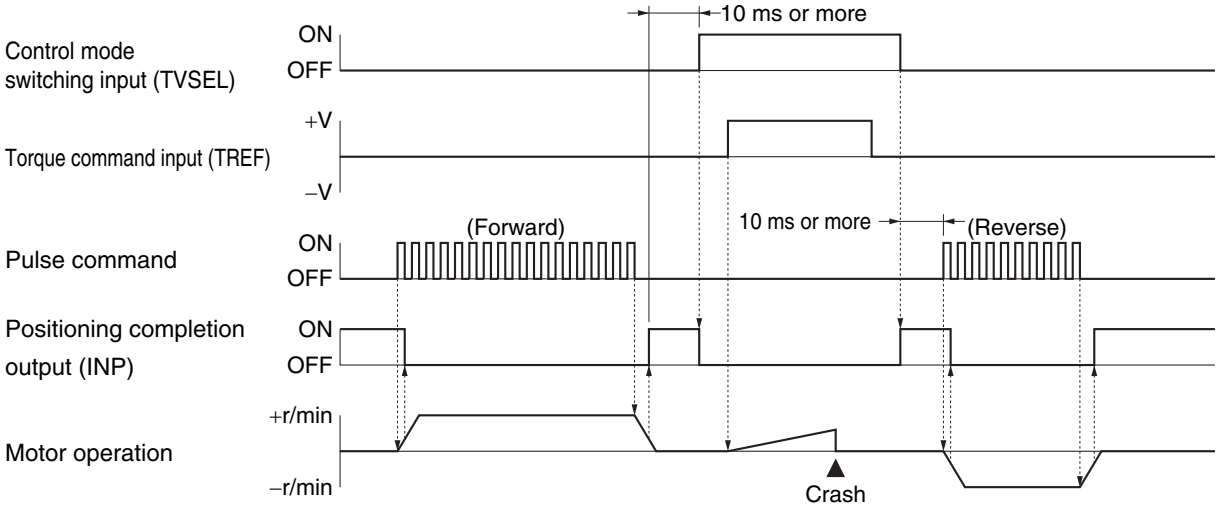

- This time chart shows an example of torque thrust.
- There is a maximum delay of 10 ms in reading the input signal.
- When switching from torque control to position control, turn OFF the control mode switching input (TVSEL) and wait at least 10 ms after the positioning completion output (INP) turns ON before inputting the pulse command. The pulses input before INP turns ON will be ignored.

Speed and Torque Control Switching Example (Pn001 = 5)

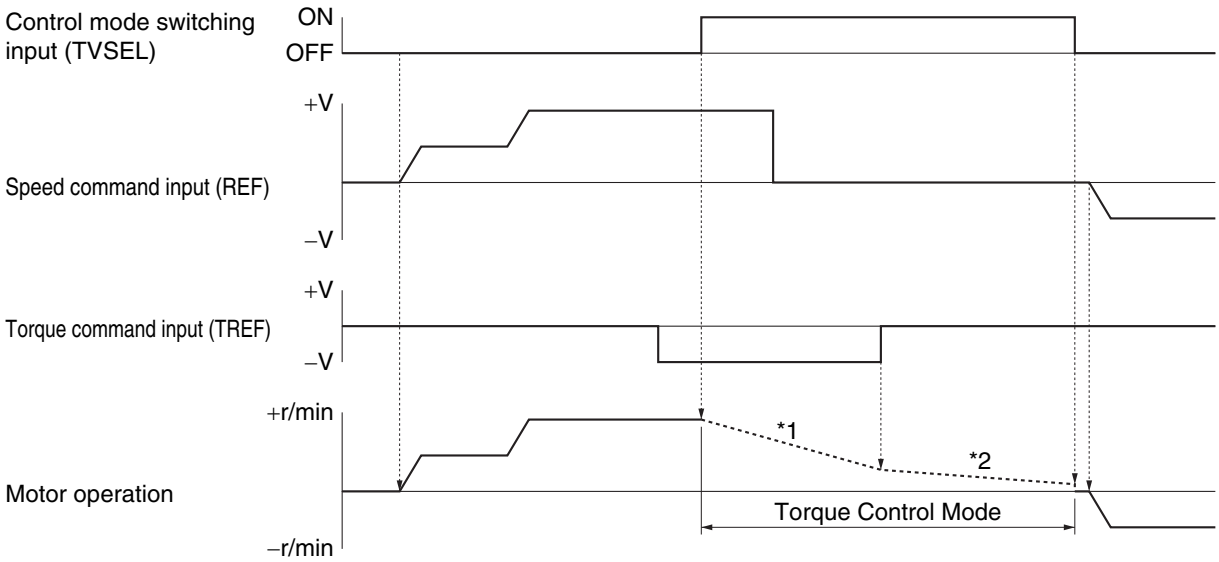

*1. Deceleration for the torque command.

*2. Deceleration due to load inertia energy and load friction torque.

- There is a maximum delay of 10 ms in reading the input signal.
- Motor operation in torque control changes according to the motor load conditions (e.g., friction, external power, inertia). Take safety measures on the machine side to prevent motor runaway.
- Adjust the torque command using Analog Input 2 Offset (Pn425) and Analog Input 2 Filter Time Constant (Pn426) because the torque command input is analog input 2.

Related Functions

Refer to the related functions for each control mode.

5-6 Fully-closed Control

Outline of Operation

- An externally provided encoder is used to directly detect the position of the control target and feedback the detected machine position to perform position control. This way, controls can be performed without being affected by ball screw error, temperature changes, etc. You can achieve highly accurate positioning by configuring a fully-closed control system.

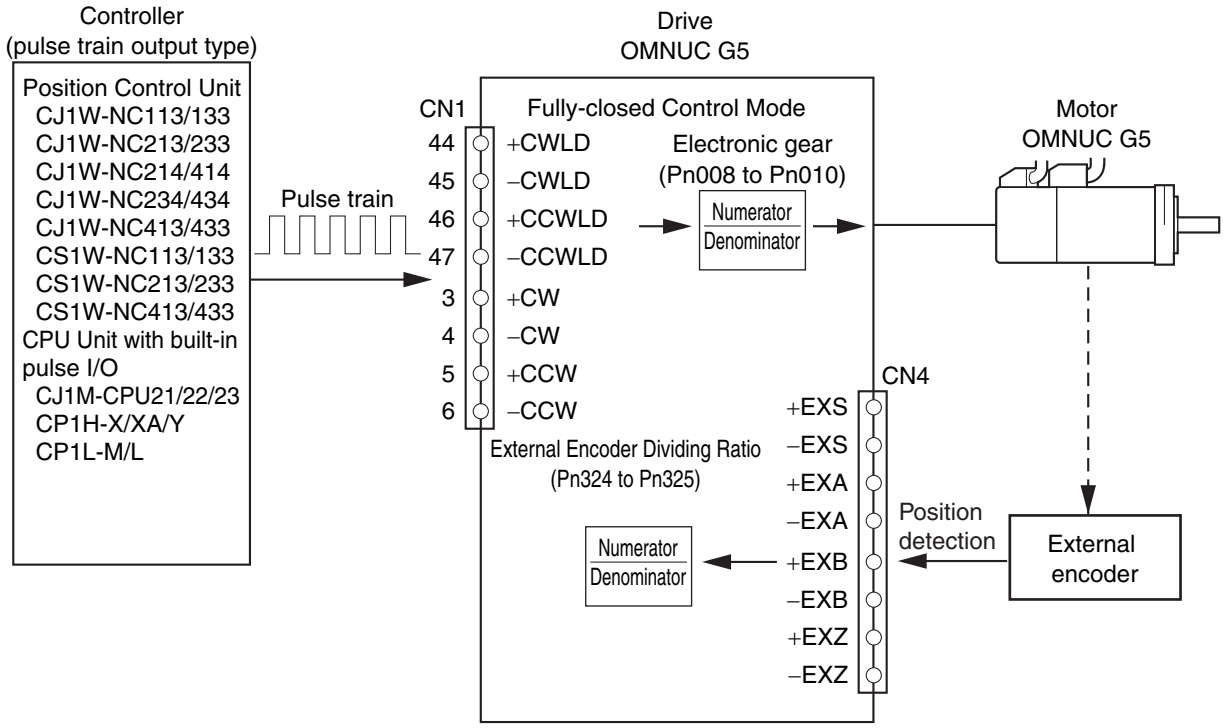

Precautions for Correct Use

- If the electronic gear ratio is 1:1, 1 command pulse from the encoder constitutes 1 external encoder pulse. The electronic gear ratio setting is different than the setting for Position Control Mode. Set the external encoder dividing ratio correctly.
- To prevent machine damage due to an external encoder setting error, set the following parameters to appropriate values.
  - Internal/External Feedback Pulse Error Counter Overflow Level (Pn328)
  - Internal/External Feedback Pulse Error Counter Reset (Pn329)
- For the setting of external encoder ratio, it is recommended that 1/40 ≤ External encoder ratio ≤ 160 be satisfied.
  If the external encoder ratio is set excessively small, control to the unit of 1 external encoder pulse may be disabled.
  If the external encoder ratio is increased, on the other hand, operating noise may increase.

Parameters Requiring Settings

Parameter number	Parameter name	Explanation	Reference
Pn000	Rotation Direction Switching	Set the relation between the command direction and the motor rotation direction.	P.8-1
Pn001	Control Mode Selection	Select the control mode.	P.8-1
Pn005	Command Pulse Input Selection	Select the command pulse input.	P.8-3
Pn006	Command Pulse Rotation Direction Switching Selection	Set the count direction for the command pulse input.	P.8-3
Pn007	Command Pulse Mode Selection	Set the count method for the command pulse input.	P.8-4
Pn008	Electronic Gear Integer Setting	Set the number of command pulses corresponding to 1 motor rotation.	P.8-5
Pn009	Electronic Gear Ratio Numerator 1	Set the numerator of the electronic gear ratio for the command pulse input.	P.8-5
Pn010	Electronic Gear Ratio Denominator	Use this parameter to set the denominator of the electronic gear ratio for the command pulse input.	P.8-5
Pn011	Encoder Dividing Numerator	Set the number of phase A and phase B output pulses, respectively per motor rotation.	P.8-6
Pn012	Encoder Output Direction Switching Selection	Select the phase B logic for pulse regeneration output and the output source.	P.8-6
Pn323	External Feedback Pulse Type Selection	Select the external encoder type.	P.8-33
Pn324	External Feedback Pulse Dividing Numerator	Set the numerator of the external encoder divider setting.	P.8-34
Pn325	External Feedback Pulse Dividing Denominator	Set the denominator of the external encoder divider setting.	P.8-34
Pn326	External Feedback Pulse Direction Switching	Set the polarity of the external encoder feedback pulse.	P.8-34
Pn327	External Feedback Pulse Phase-Z Setting	Set whether to enable or disable the disconnection detection function of phase Z when a 90° phase difference output type external encoder is used.	P.8-34
Pn328	Internal/External Feedback Pulse Error Counter Overflow Level	Set the threshold of A250 "internal/external feedback pulse error counter overflow" in the command unit.	P.8-34
Pn329	Internal/External Feedback Pulse Error Counter Reset	The hybrid error becomes 0 every time the motor rotates by the set value.	P.8-34
Pn503	Encoder Dividing Denominator	Set the denominator when the number of pulses per motor rotation in pulse regeneration is not an integer.	P.8-47

Rotation Direction Switching (Pn000)

Set the relation between the command direction and the motor rotation direction.
0: Counterclockwise when viewed from the end of the shaft for positive commands
1: Clockwise when viewed from the end of the shaft for positive commands
Take note that if Pn000 = 1, the scale count direction becomes opposite to the count direction used for monitoring the total external encoder feedback pulses, etc.

Control Mode Selection (Pn001)

Select the fully-closed control (set value: 6).

Command Pulse Input Process (Pn005, Pn006, Pn007)

Position command input terminals are classified into the input 1 system (+CW, -CW, +CCW, -CCW) and input 2 system (+CWLD, -CWLD, +CCWLD, -CCWLD).
If the position command output is a line-driver output, set input 1. If it is an open collector output, set input 2. Although input 2 can also be used for a line-driver output, the allowable maximum input frequency will become lower than when input 1 is selected.

Parameter number	Parameter name	Explanation	Setting range	Unit
Pn005	Command Pulse Input Selection	Select the command pulse input terminal. 0: Photocoupler input (+CW, -CW, +CCW, -CCW) 1: Input for line driver only (+CWLD, -CWLD, +CCWLD, -CCWLD)	0 or 1	–
Pn006	Command Pulse Rotation Direction Switching Selection	Set the count direction for the command pulse input. 0: Command pulse, forward direction 1: Command pulse, reverse direction	0 or 1	–
Pn007	Command Pulse Mode Selection	Set the count method for the command pulse input. 0: 90° phase difference (A/B) signal input 1: Forward/reverse pulse 2: 90° phase difference (A/B) signal input 3: Feed pulse/direction signal	0 to 3	–

- For information on the settings for command pulse rotation direction and command pulse mode, refer to "5-1 Position Control"(P.5-1).

Electronic Gear Function (Pn008, Pn009, Pn010)

This function sets the position command for the position control part a value calculated by multiplying the pulse command input from the Host Controller with the set electronic gear ratio.

Parameter number	Parameter name	Explanation	Setting range	Unit
Pn008	Electronic Gear Integer Setting	Set the number of command pulses corresponding to 1 motor rotation.	0 to 2^{20}	Pulse
Pn009	Electronic Gear Ratio Numerator 1	Set the numerator of the electronic gear ratio for the command pulse input.	0 to 2^{30}	–
Pn010	Electronic Gear Ratio Denominator	Set the denominator of the electronic gear ratio for the command pulse input.	1 to 2^{30}	–

• For details on the electronic gear function, refer to "6-4 Electronic Gear Function"(P.6-10).

Encoder Dividing Function (Pn011, Pn012, Pn503)

The number of pulses can be set for the encoder signals output from the drive.

<table>
<tr><th>Parameter number</th><th>Parameter name</th><th>Explanation</th><th>Setting range</th><th>Unit</th></tr>
<tr><td>Pn011</td><td>Encoder Dividing Numerator</td><td>Set the number of phase A and phase B output pulses, respectively per motor rotation.</td><td>1 to 262144</td><td>Pulse/r</td></tr>
<tr><td>Pn012</td><td>Encoder Output Direction Switching Selection</td><td>Select the phase B logic for pulse regeneration output and the output source.
<table><tr><th>Set value</th><th>Output source</th><th>Phase B logic</th></tr><tr><td>0</td><td rowspan="2">Encoder</td><td>Non-reverse</td></tr><tr><td>1</td><td>Reverse</td></tr><tr><td>2</td><td rowspan="2">External encoder</td><td>Non-reverse</td></tr><tr><td>3</td><td>Reverse</td></tr></table></td><td>0 to 3</td><td>–</td></tr>
<tr><td>Pn503</td><td>Encoder Dividing Denominator</td><td>When the number of output pulse per rotation is not an integer, you can set a dividing ratio by setting the set value here to a number other than 0, and using Pn011 as the dividing numerator and Pn503 as the dividing denominator.</td><td>0 and
1 to 262144</td><td>–</td></tr>
</table>

• For details on encoder dividing function, refer to "6-5 Encoder Dividing Function"(P.6-13).

External Feedback Pulse Type Selection (Pn323, Pn326)

Set the external encoder output type and direction.

<table>
<tr><th>Parameter number</th><th>Parameter name</th><th>Explanation</th><th>Setting range</th><th>Unit</th></tr>
<tr><td>Pn323</td><td>External Feedback Pulse Type Selection</td><td>Select the type of the external encoder to be used.
<table><tr><th>Set value</th><th>External encoder type</th></tr><tr><td>0</td><td>Encoder with 90° phase difference output</td></tr><tr><td>1</td><td>Incremental encoder with serial communications</td></tr><tr><td>2</td><td>Absolute encoder with serial communications</td></tr></table></td><td>0 to 3</td><td>–</td></tr>
<tr><td>Pn326</td><td>External Feedback Pulse Direction Switching</td><td>If the count directions of the external encoder feedback pulse and the encoder total feedback pulses do not match, reverse the external encoder feedback pulse direction in this setting.
0: Not reversed, 1: Reversed</td><td>0 or 1</td><td>–</td></tr>
</table>

The corresponding external encoders for each output type are given in the following table.

Pn323 set value	External encoder type	Corresponding external encoder examples	Maximum input frequency *2
0	Phase-AB output type *1	External encoder of phase-AB outputs	0 to 4 Mpps (After × 4)
1	Incremental encoder with serial communications	Sony Manufacturing Systems Corporation SR75, SR85	0 to 400 Mpps
2	Absolute encoder with serial communications	Mitutoyo Corporation AT573, ST771A, ST773A Sony Manufacturing Systems Corporation SR77, SR87	0 to 400 Mpps

*1. The drive count direction relative to the external encoder of phase-AB output type is explained below.

Count-down direction

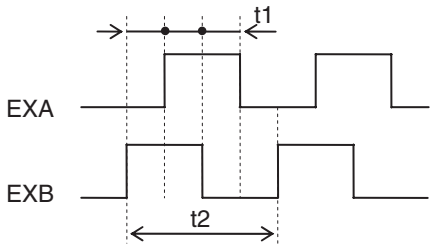

EXB is 90° ahead of EXA.
t1>0.25 μs
t2>1.0 μs

Count-up direction

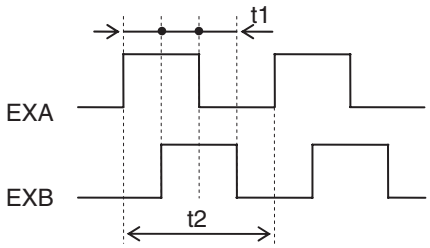

EXB is 90° behind EXA.
t1>0.25 μs
t2>1.0 μs

*2. These are the feedback speeds from the external encoder at which Servo Drive can respond. Check the external encoder operation manual for its maximum output frequency. For example, the maximum speed when an external encoder with a resolution of 0.01 μm is used for the serial communication type is 0.01 μm × (400 × 10^6) pps = 4.00 m/s. An overspeed error protection is generated, however, if the motor shaft rotation speed exceeds the maximum speed.

Precautions for Correct Use

- For the external encoder connection direction, set the rotation direction so that count-up occurs when the motor shaft is rotating counterclockwise, and count-down occurs when the motor shaft is rotating clockwise. If the connection direction cannot be selected due to installation conditions, etc., the count direction can be reversed using External Feedback Pulse Direction Switching (Pn326).
- Take note that if Pn000 = 1, the encoder count direction becomes opposite to the count direction used for monitoring the total external encoder feedback pulses, etc.
  If Pn000 = 0, the count direction matches the count direction for monitoring.
- Even when the speed command is within the Drive's speed command range, an acceleration error will occur if the speed command exceeds the maximum speed of motor shaft rotation.
- To confirm that the installation direction is correct, use the front-panel monitor or the CX-Drive monitor function to check the counting direction of the total external encoder feedback pulses and the total encoder feedback pulses. If the counting directions are the same, the connections are correct.

External Feedback Pulse Dividing Ratio Setting (Pn324, Pn325)

Set the dividing ratio for the encoder resolution and external encoder resolution.

Parameter number	Parameter name	Explanation	Setting range	Unit
Pn324	External Feedback Pulse Dividing Numerator	Set the numerator of the external encoder divider setting. Normally, set the number of encoder output pulses per motor rotation. If the set value is 0, the encoder resolution is set automatically.	0 to 2^{20}	-
Pn325	External Feedback Pulse Dividing Denominator	Set the denominator of the external encoder divider setting. Normally, set the number of external encoder output pulses per motor rotation.	1 to 2^{20}	-

Check the number of encoder feedback pulses and the number of external encoder output pulses per motor rotation, and set External Feedback Pulse Dividing Numerator (Pn324) and External Feedback Pulse Dividing Denominator (Pn325) so that the following formula works out.

$$\frac{\text{Pn324}}{\text{Pn325}} = \frac{\text{Number of encoder output pulses per motor rotation}}{\text{Number of external encoder output pulses per motor rotation}}$$

If this divider setting is wrong, there will be deviations between the position calculated from encoder pulses and the position calculated from external encoder. If the movement distance is long, these deviations accumulate and cause an internal/external feedback pulse error counter overflow level error.

■ Setting Examples

- Ball screw pitch: 10 mm
- External encoder resolution: 0.1 μm
- Encoder resolution: 20 bits

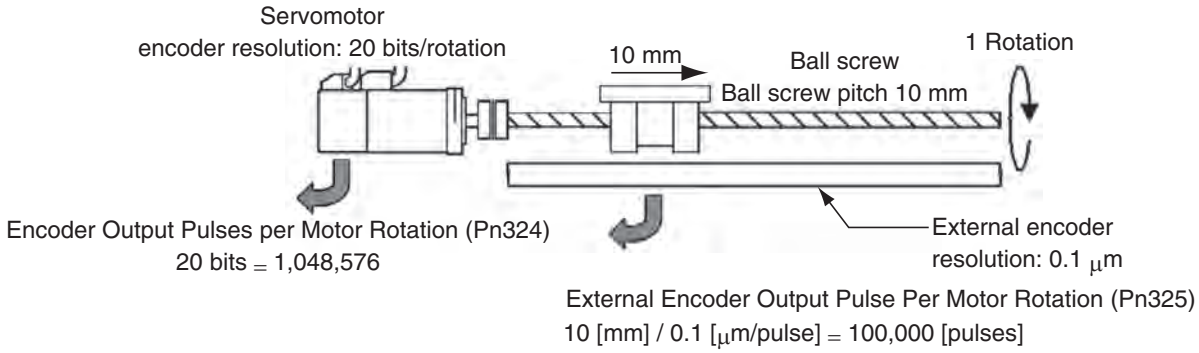

$$\frac{\text{Pn324}}{\text{Pn325}} = \frac{\text{Number of encoder output pulses per motor rotation}}{\text{Number of external encoder output pulses per motor rotation}} = \frac{1{,}048{,}576}{100{,}000}$$

External Feedback Pulse Error Setting (Pn328, Pn329)

The difference between the encoder position and external encoder position is detected, and if the difference exceeds the value of Internal/External Feedback Pulse Error Counter Overflow Level (Pn328), an alarm will occur.

Parameter number	Parameter name	Explanation	Setting range	Unit
Pn328	Internal/External Feedback Pulse Error Counter Overflow Level	Set the allowable difference (hybrid error) between the encoder-detected position and external encoder-detected position in command units.	1 to 2^{27}	Command units
Pn329	Internal/External Feedback Pulse Error Counter Reset	The hybrid error becomes 0 every time the motor rotates by the set value. If the set value is 0, the hybrid error is not cleared.	0 to 100	Rotations

Pn329: Internal/External Feedback Pulse Error Counter Reset

Every time the motor rotates for the amount set by Pn329, the internal/external feedback pulse error is cleared.

This function can be used when there is deviation between the position calculated from encoder pulses and the position calculated from external encoder due to slipping, etc, and internal/external feedback pulse errors accumulate.

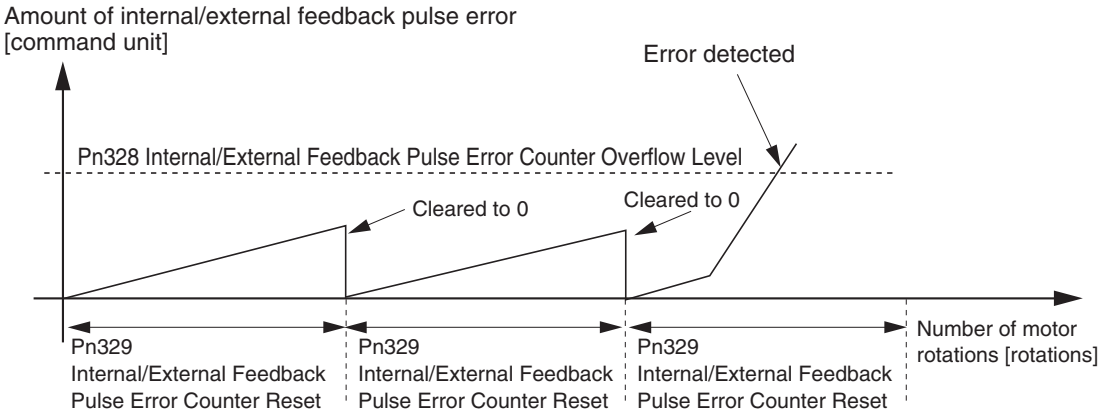

Precautions for Correct Use

- An internal/external feedback pulse error counter overflow level error occurs when the external encoder is abnormal, connection is wrong, or connection point between the motor and load is loose, among others. Accordingly, check these items when an alarm occurs.
- Be sure to set an appropriate value for Internal/External Feedback Pulse Error Counter Reset (Pn329). If an extremely small value is set, this function may not operate.
- Take sufficient safety measures, such as installing limit sensors.

Parameter Block Diagram for Fully-closed Control Mode

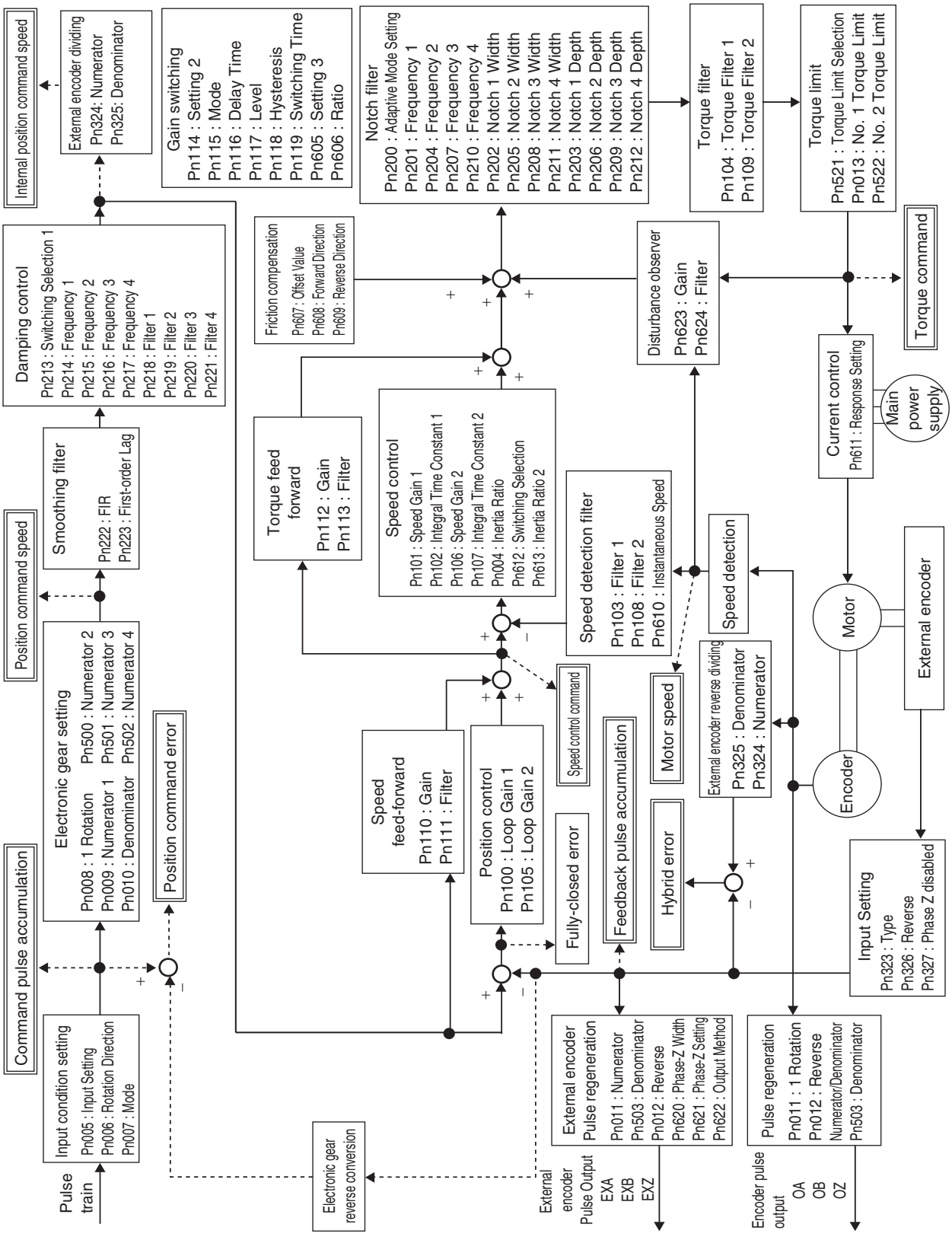

6

Applied Functions

This chapter gives outline of applied functions such as damping control, electronic gears, gain switching and disturbance observer, and explains the contents of setting.

6-1 Damping Control....6-1
Outline of Operation....6-1
Parameters Requiring Settings....6-2
6-2 Adaptive Filter....6-5
Outline of Operation....6-5
Parameters Requiring Settings....6-6
6-3 Notch Filter....6-7
Outline of Operation....6-7
Parameters Requiring Settings....6-8
6-4 Electronic Gear Function....6-10
Outline of Operation....6-10
Parameters Requiring Settings....6-10
Operation Example....6-12
6-5 Encoder Dividing Function....6-13
Outline of Operation....6-13
Parameters Requiring Settings....6-13
6-6 Brake Interlock....6-18
Outline of Operation....6-18
Parameters Requiring Settings....6-18
Precautions for Correct Use of Holding Brake....6-18
Operation....6-19
6-7 Gain Switching Function....6-23
Outline of Operation....6-23
Parameters Requiring Settings....6-24
6-8 Gain Switching 3 Function....6-32
Outline of Operation....6-32
Parameters Requiring Settings....6-32
Operation....6-32
6-9 Torque Limit....6-33
Outline of Operation....6-33
Parameters Requiring Settings....6-33

6-10 Sequence I/O Signal 6-36
Outline of Operation 6-36
Input Signals 6-36
Output Signals 6-39
6-11 Forward and Reverse Drive Prohibition Functions 6-42
Outline of Operation 6-42
Parameters Requiring Settings 6-42
6-12 Disturbance Observer Function 6-45
Outline of Operation 6-45
Parameters Requiring Settings 6-46
Operating Procedure 6-46
6-13 Friction Torque Compensation Function 6-47
Outline of Operation 6-47
Parameters Requiring Settings 6-47
Operation Example 6-48
6-14 Inertia Ratio Switching Function 6-49
Outline of Operation 6-49
Parameters Requiring Settings 6-49
Operating Procedure 6-49
6-15 Hybrid Vibration Suppression Function 6-50
Outline of Operation 6-50
Parameters Requiring Settings 6-50
Operating Procedure 6-50
6-16 Feed-forward Function 6-51
Outline of Operation 6-51
Parameters Requiring Settings 6-51
Operating Procedure 6-52
6-17 Instantaneous Speed Observer Function 6-55
Outline of Operation 6-55
Parameters Requiring Settings 6-55
Operating Procedure 6-56

6-1 Damping Control

Outline of Operation

If the tip of the mechanical unit vibrates, you can use the damping control function to reduce vibration.
This is effective on vibration generated by a machine of low rigidity. The applicable frequencies are from 1 to 200 Hz.
Since damping control is performed using position commands, it cannot be used with speed or torque control.

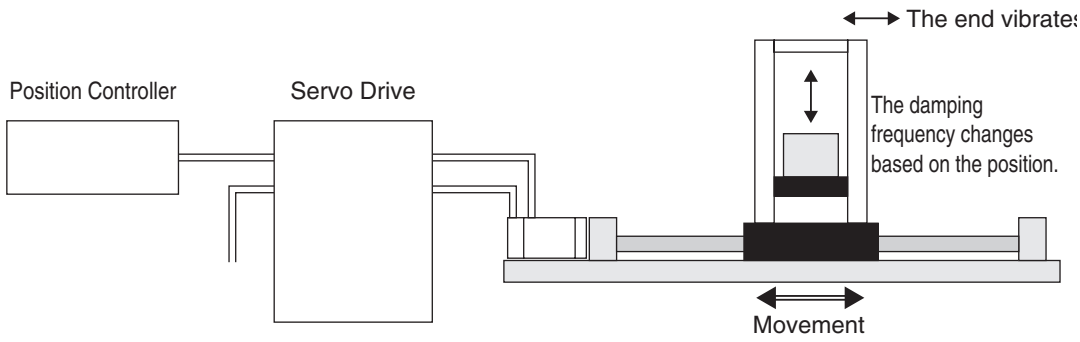

Parameters Requiring Settings

Parameter number	Parameter name	Explanation	Reference
Pn001	Control Mode Selection	Set to the Position Control Mode or Fully-closed Control Mode. 0: Position control 3: First control mode for position/speed control 4: First control mode for position/torque control 6: Fully-closed control	P.8-1
Pn213	Damping Filter Selection	Select the damping filter switching mode according to the condition of the unit. 0: Damping filter 1 or 2 enabled 1: Switching by external input (DFSEL1) 2: Switching by external input (DFSEL1, DFSEL2) 3: Switching with command direction	P.8-21
Pn214	Damping Frequency 1	Set damping frequency 1 to suppress vibration at the end of the load in damping control. If the damping control function is not used, set 0.	P.8-22
Pn215	Damping Filter 1 Setting	When the Damping Frequency 1 (Pn214) is set, reduce the setting if torque saturation occurs or increase the setting to increase operation speed. Normally 0 is set. If the damping filter 1 is disabled, this parameter is also disabled.	P.8-22
Pn216	Damping Frequency 2	The function is the same with Pn214.	P.8-22
Pn217	Damping Filter 2 Setting	The function is the same with Pn215.	P.8-22
Pn218	Damping Frequency 3	The function is the same with Pn214.	P.8-23
Pn219	Damping Filter 3 Setting	The function is the same with Pn215.	P.8-23
Pn220	Damping Frequency 4	The function is the same with Pn214.	P.8-23
Pn221	Damping Filter 4 Setting	The function is the same with Pn215.	P.8-23

Precautions for Correct Use

- Stop operation before changing the parameters or switching with DFSEL.
- Damping control may not function properly or the effect may not be apparent under the following conditions.

Item	Conditions under which the effect of damping control is inhibited
Control mode	- Speed Control Mode or Torque Control Mode
Load condition	- If forces other than position commands, such as external forces, cause vibration. - If the damping frequency is outside the range of 1 to 200 Hz. - If the ratio of the resonance frequency to anti-resonance frequency is large.

Operating Procedure

1. **Adjust the position loop gain and speed loop gain.**
   Adjust Position Loop Gain (Pn100), Speed Loop Gain (Pn101), Speed Loop Integral Time Constant (Pn102) and Torque Command Filter Time Constant (Pn104).
   If no problem occurs in realtime autotuning, you can continue to use the settings.
2. **Measure the damping frequency at the tip of the mechanical unit.**
   Measure the damping frequency by using a measurement device such as a laser displacement sensor, servo acceleration meter, or acceleration pick-up.
   Set the damping frequency in one of Damping Frequency 1 to Damping Frequency 4 (1: Pn214, 2: Pn216, 3: Pn218, 4: Pn220) according to the operation.
   Also set the switching mode using Damping Filter Selection (Pn213).
   If the measurement device cannot be used, use CX-Drive tracing function, and read the residual damping frequency (Hz) from the position error waveform as shown in the following figure.

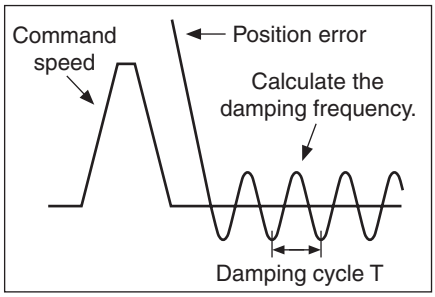

- The damping frequency in the figure is calculated with the following formula:

$$f\ (Hz) = \frac{1}{T\ (s)}$$

Since the parameter unit is 0.1 Hz:
(Pn214, Pn216, Pn218, Pn220) = 10 × f

- Application example
  If the damping cycle is 100 ms or 20 ms, set 100 or 500 in the parameter so that the damping frequency becomes 10 Hz or 50 Hz.

If vibration persists after setting the frequency, increase or decrease the damping frequency to find the frequency at which vibration decreases.

3. **Make the damping filter settings.**
   Make the damping filter settings (1: Pn215, 2: Pn217, 3: Pn219, 4: Pn221).
   First, set to 0.
   The stabilization time can be reduced by setting a large value; however, torque ripple will increase at the command change point as shown in the following figure. Set a range that will not cause torque saturation under actual operation conditions. The effects of vibration suppression will be lost if torque saturation occurs.

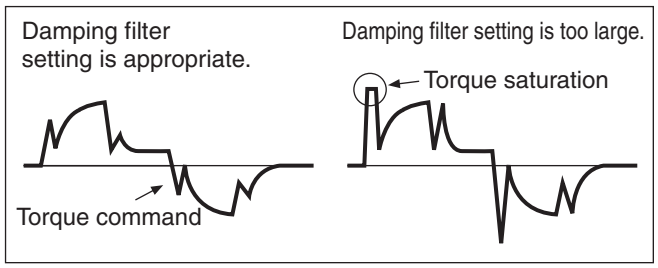

When the Damping Frequency 1 (Pn214) is set, reduce the setting if torque saturation occurs or increase the setting to increase operation speed. Normally 0 is set.
If the damping filter 1 is enabled, use the following setting range.
Setting range: 100 ≤ Pn214 + Pn215 ≤ Pn214 × 2 or 2,000
Note: If the damping filter 1 is disabled under Damping Filter Selection (Pn213), this parameter is also disabled.

4. Set the Damping Filter Selection (Pn213).

Damping filters 1 to 4 can be switched according to the conditions of the machine vibration.

Set value	Switching mode
0	Damping filter 1 and 2 enabled
1	Switching by external input (DFSEL1) Open: Damping filter 1 or 3 enabled Shorted: Damping filter 2 or 4 enabled
2	Switching by external input (DFSEL1, DFSEL2) When DFSEL1 and DFSEL2 are both open: Damping filter 1 enabled When DFSEL1 is shorted and DFSEL2 is open: Damping filter 2 enabled When DFSEL1 is open and DFSEL2 is shorted: Damping filter 3 enabled When DFSEL1 and DFSEL2 are both shorted: Damping filter 4 enabled
3	Switching with command direction Forward: Damping filters 1 and 3 enabled Reverse: Damping filters 2 and 4 enabled

6-2 Adaptive Filter

Outline of Operation

The adaptive filter reduces resonance point vibration by estimating the resonance frequency from the vibration component that appears in the motor speed during actual operation and automatically sets the frequency of the notch filter, which removes the resonance component from the torque command.
The automatically set notch filter frequency is set in Notch 3 (Pn207 to Pn209) or Notch 4 (Pn210 to Pn212).
Refer to "6-3 Notch Filter" (P.6-7) for information on notch filter.

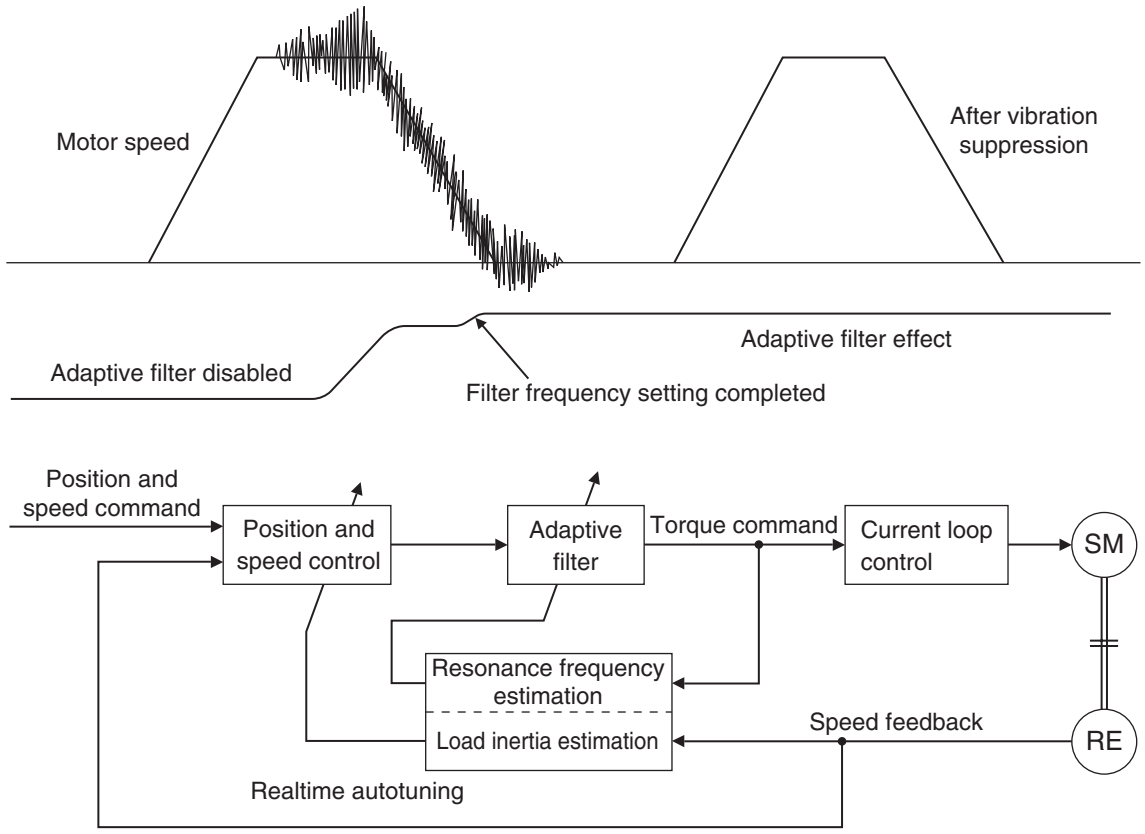

Parameters Requiring Settings

Parameter number	Parameter name	Explanation	Reference
Pn200	Adaptive Filter Selection	Set the number of resonance frequencies to be estimated by the adaptive filter and the operation to be performed after estimation. 0: Adaptive filter disabled 1: 1 adaptive filters enabled 2: 2 adaptive filters enabled 3: Resonance Frequency Measurement Mode The servo drive measures the resonant frequency automatically. 4: Adaptive result clear The notch filter 3 and notch filter 4 parameters are disabled, and adaptive result is cleared.	P.8-20

Precautions for Correct Use

- Adaptive filter may not operate correctly under the following conditions.

Item	Conditions under which the adaptive filter not operates properly
Control mode	· Torque Control Mode
Resonance points	· If the resonance frequency is 300 Hz or lower. · If the resonance peak or control gain is too low to affect the motor speed. · If there are three or more resonance points.
Load	· If the motor speed with high-frequency components changes due to backlash or other non-linear elements.
Command pattern	· The acceleration/deceleration is sudden.

- If the adaptive filter does not operate properly, use Notch 1 (Pn201 to Pn203) or Notch 2 (Pn204 to Pn206) to implement resonance measures according to the manual adjustment procedure. Refer to "6-3 Notch Filter" (P.6-7) for information on notch filter.
- An unusual noise or vibration may occur until the adaptive filter stabilizes after startup, immediately after the first servo ON, or when the Realtime Autotuning Machine Rigidity Selection (Pn003) is increased, but this is not a problem if it disappears right away. If the vibration or unusual noise, however, continues for three or more reciprocating operations, take the following measures in the possible order.
  - · Write the parameters used during normal operation to the EEPROM.
  - · Lower the Realtime Autotuning Machine Rigidity Selection (Pn003).
  - · Disable the adaptive filter by setting the Adaptive Filter Selection (Pn200) to 0. (Resetting of inertial estimation and adaptive operation)
  - · Manually set the notch filter.
- If unusual noise or vibration occurred, the setting of Notch 3 (Pn207 to Pn209) or Notch 4 (Pn210 to Pn212) may have changed to an extreme value. In this case, set Adaptive Filter Selection (Pn200) to 0 to disable the parameter and then set Notch 3 Frequency Setting (Pn207) and Notch 4 Frequency Setting (Pn210) to 5,000 (disabled). Next, enable Adaptive Filter Selection again.
- Notch 3 Frequency Setting (Pn207) and Notch 4 Frequency Setting (Pn210) are written to the EEPROM every 30 minutes. When the power supply is turned OFF and then turned ON again, this data will be used as the default settings to perform adaptive operation.
- The adaptive filter is disabled when torque control is performed, but the adaptive filter frequency used in the control mode before switching will be held if torque control has been selected by setting the Control Mode Selection (Pn001) to 5 or 6.

6-3 Notch Filter

Outline of Operation

You can set up to 4 notch filters for the torque command.
If a ball screw or other controlled device causes resonance at a specific location, you can set the resonance frequency using a notch filter to eliminate resonance.
A notch filter is used to eliminate a specified frequency component.

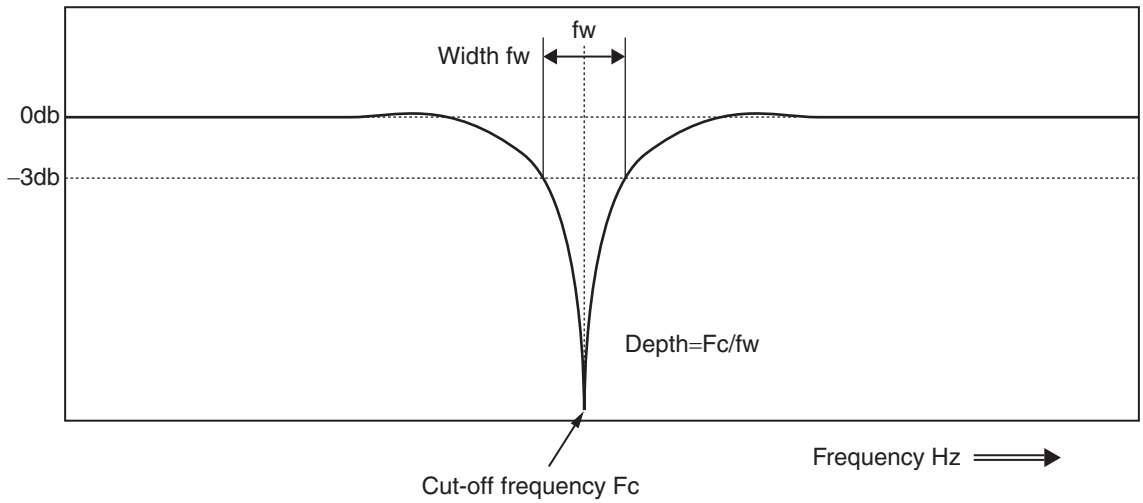

If machine resonance occurs, use this notch filter to eliminate resonance.

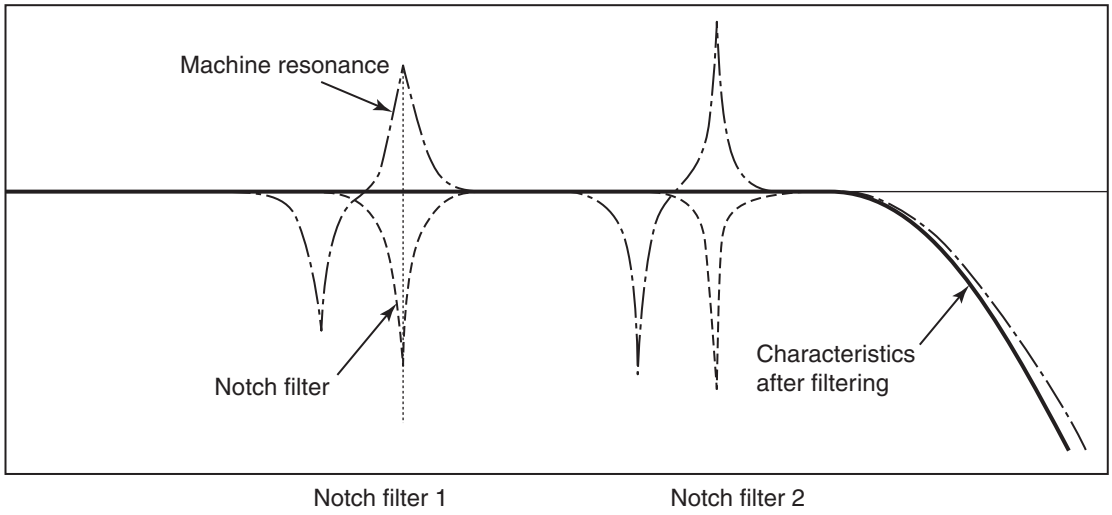

Parameters Requiring Settings

Parameter number	Parameter name	Explanation	Reference
Pn201	Notch 1 Frequency Setting	Set the center frequency of notch filter 1. The notch filter is enabled at 50 to 4,999 Hz, and disabled at 5,000 Hz.	P.8-20
Pn202	Notch 1 Width Setting	Select the width of the notch filter 1 frequency. Increasing the value widens the notch width. (Setting range: 0 to 20)	P.8-20
Pn203	Notch 1 Depth Setting	Select the depth of the notch filter 1 center frequency. Increasing the value decreases the notch depth and thereby reduces the phase delay. The notch filter is disabled if 100 is set. (Setting range: 0 to 99)	P.8-20
Pn204	Notch 2 Frequency Setting	Set the center frequency of the notch filter 2. The details are the same with the notch filter 1 frequency.	P.8-20
Pn205	Notch 2 Width Setting	Select the width of the notch filter 2 frequency. The details are the same with the notch filter 1 width.	P.8-20
Pn206	Notch 2 Depth Setting	Select the depth of the notch filter 2 center frequency. The details are the same with the notch filter 1 depth.	P.8-21
Pn207	Notch 3 Frequency Setting *1	Set the center frequency of the notch filter 3. The details are the same with the notch filter 1 frequency.	P.8-21
Pn208	Notch 3 Width Setting *1	Select the width of the notch filter 3 frequency. The details are the same with the notch filter 1 width.	P.8-21
Pn209	Notch 3 Depth Setting *1	Select the depth of the notch filter 3 center frequency. The details are the same with the notch filter 1 depth.	P.8-21
Pn210	Notch 4 Frequency Setting *1	Set the center frequency of the notch filter 4. The details are the same with the notch filter 1 frequency.	P.8-21
Pn211	Notch 4 Width Setting *1	Select the width of the notch filter 4 frequency. The details are the same with the notch filter 1 width.	P.8-21
Pn212	Notch 4 Depth Setting *1	Select the depth of the notch filter 4 center frequency. The details are the same with the notch filter 1 depth.	P.8-21

*1 If an adaptive filter is used, these are set automatically.

Precautions for Correct Use

- Identify the resonance frequency using the frequency characteristics measurement function, resonance frequency monitor or operation waveform of the waveform graphics function of CX-Drive and set the identified frequency as the notch filter frequency.

Notch Filter Width and Depth

Width Setting

This is the ratio of the frequency bandwidth at a damping factor of -3 [dB] relative to the center frequency when the depth is 0. This value should conform to the left column in the table below.

Depth Setting

This is the I/O ratio at which the center frequency input is completely cut off at a set value of 0 and completely passed at a set value of 100. If the indication unit is [dB], this value should conform to the right column in the table below.

Width	
Set value	Bandwidth/center frequency
0	0.50
1	0.59
2	0.71
3	0.84
4	1.00
5	1.19
6	1.41
7	1.68
8	2.00
9	2.38
10	2.83
11	3.36
12	4.00
13	4.76
14	5.66
15	6.73
16	8.00
17	9.51
18	11.31
19	13.45
20	16.00

Depth		
Set value	I/O ratio (%)	Damping factor (dB)
0	0 (Cut off)	−∞
1	1	−40.0
2	2	−34.0
3	3	−30.5
4	4	−28.0
5	5	−26.0
10	10	−20.0
15	15	−16.5
20	20	−14.0
25	25	−12.0
30	30	−10.5
35	35	−9.1
40	40	−8.0
45	45	−6.9
50	50	−6.0
60	60	−4.4
70	70	−3.1
80	80	−1.9
90	90	−0.9
100	100 (Passed)	0.0

Notch filter frequency characteristics

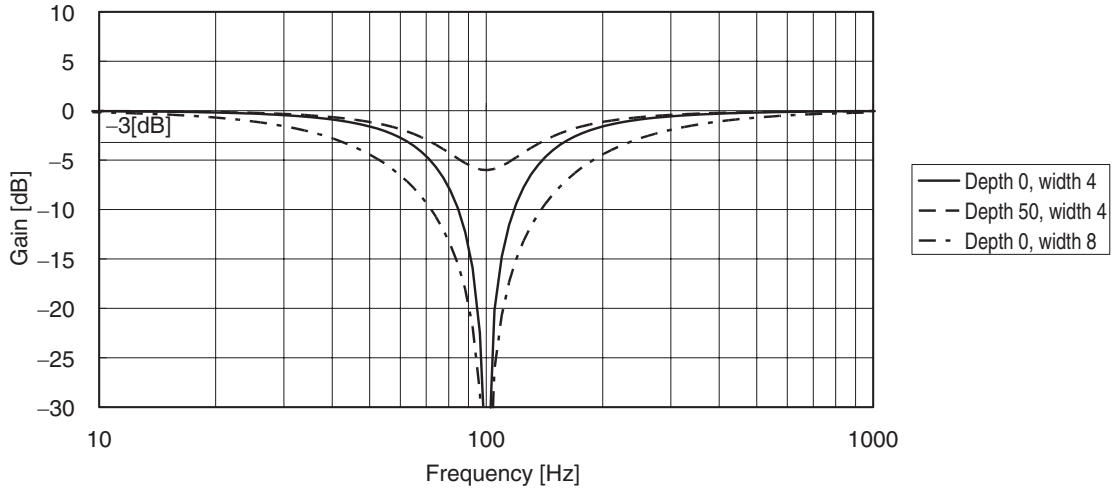

6-4 Electronic Gear Function

Outline of Operation

- The motor can be rotated for the number of pulses obtained by multiplying the position command values by the electronic gear ratio.
- This function supports position and fully-closed control.

Parameters Requiring Settings

Parameter number	Parameter name	Explanation	Reference
Pn008	Electronic Gear Integer Setting	Set the number of command pulses corresponding to 1 motor rotation.	P.8-5
Pn009	Electronic Gear Ratio Numerator 1	Set the numerator of the electronic gear ratio. If the set value is 0, the encoder resolution is automatically set as the numerator. · 131,072 for a 17-bit absolute encoder · 1,048,576 for a 20-bit incremental encoder	
Pn010	Electronic Gear Ratio Denominator	Set the denominator of the electronic gear ratio.	
Pn500	Electronic Gear Ratio Numerator 2 *1	Set the numerator of the electronic gear ratio 2.	
Pn501	Electronic Gear Ratio Numerator 3 *1	Set the numerator of the electronic gear ratio 3.	
Pn502	Electronic Gear Ratio Numerator 4 *1	Set the numerator of the electronic gear ratio 4.	

*1. Switching among Electronic Gear Ratio Numerators 2 to 4 (Pn500 to Pn502) is performed using the electronic gear switching input (GESEL1/GESEL2).
The settings of GESEL1 and GESEL2 are as follows.

GESEL1	GESEL2	Applicable parameters
OFF	OFF	Electronic Gear Ratio Numerator 1 (Pn009)
ON	OFF	Electronic Gear Ratio Numerator 2 (Pn500)
OFF	ON	Electronic Gear Ratio Numerator 3 (Pn501)
ON	ON	Electronic Gear Ratio Numerator 4 (Pn502)

Electronic Gear Ratio Setting (Pn008, Pn009, Pn010)

<table>
<tr><th>Electronic Gear Integer Setting (Pn008)</th><th>Electronic Gear Ratio Numerator 1 (Pn009)</th><th>Electronic Gear Ratio Denominator (Pn010)</th><th>Explanation</th></tr>
<tr><td>1 to 1058576</td><td>–</td><td>–</td><td>When the Electronic Gear Integer Setting (Pn008) ≠ 0
The processing will be based on the set value of Electronic Gear Integer Setting (Pn008) regardless of the set values of Electronic Gear Ratio Numerator 1 (Pn009) and Electronic Gear Ratio Denominator (Pn010).
Command pulse input → Encoder resolution * / Electronic Gear Integer Setting (Pn008) → Position command
Position command pulse = Encoder resolution / Electronic Gear Integer Setting (Pn008)
Switching among electronic gear ratio numerators 1 to 4 is disabled when the Electronic Gear Integer Setting (Pn008) ≠ 0.</td></tr>
<tr><td rowspan="2">0</td><td>0</td><td rowspan="2">1 to 1073741824</td><td>When the Electronic Gear Integer Setting (Pn008) = 0, or Electronic Gear Ratio Numerator 1 (Pn009) = 0
The processing will be based on the set value of Electronic Gear Ratio Denominator (Pn010).
Command pulse input → Encoder resolution * / Electronic Gear Ratio Denominator (Pn010) → Position command
Position command pulse = Encode resolution / Electronic Gear Ratio Denominator (Pn010)</td></tr>
<tr><td>1 to 1073741824</td><td>When the Electronic Gear Integer Setting (Pn008) = 0, or Electronic Gear Ratio Numerator 1 (Pn009) ≠ 0
The processing will be based on the set values of Electronic Gear Ratio Numerator 1 (Pn009) and Electronic Gear Ratio Denominator (Pn010).
Command pulse input → Electronic Gear Ratio Numerator 1 (Pn009) / Electronic Gear Ratio Denominator (Pn010) → Position command
Position command pulse = Electronic Gear Ratio Numerator 1 (Pn009) / Electronic Gear Ratio Denominator (Pn010)</td></tr>
</table>

* The encoder resolution is set as the numerator for fully-closed control. The command pulse is the external encoder reference for fully-closed control. Accordingly, please be cautious that the Pn008 set value will not be the number of command pulses per motor rotation.

Operation Example

- Example of a motor with a 20-bit encoder (1,048,576 pulses/rotation)

When the Electronic Gear Integer Setting (Pn008) ≠ 0

- If you set Pn008 = 2,000, it will operate the same as the 2,000 (pulses/rotation) Servomotor.

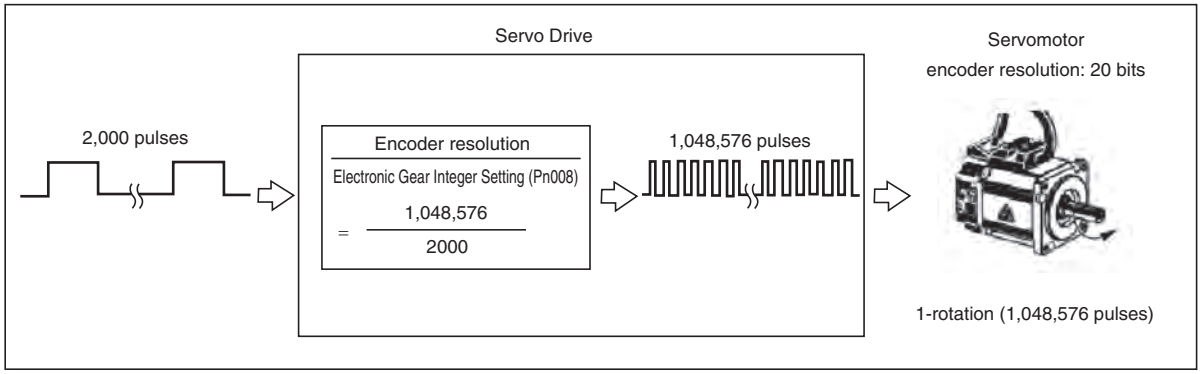

When the Electronic Gear Integer Setting (Pn008) = 0 and the Electronic Gear Ratio Numerator = 0

- If you set Pn010 = 2,000, it will operate the same as the 2,000 (pulses/rotation) Servomotor.

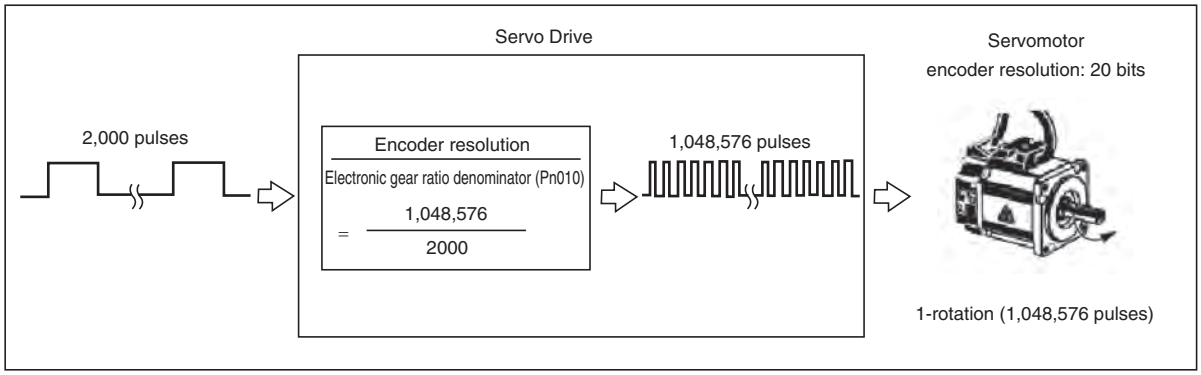

When the Electronic Gear Integer Setting (Pn008) = 0 and the Electronic Gear Ratio Numerator ≠ 0

- If you set Pn009 and Pn010 = 512/1, it will operate the same as the 2,048 (pulses/rotation) Servomotor.

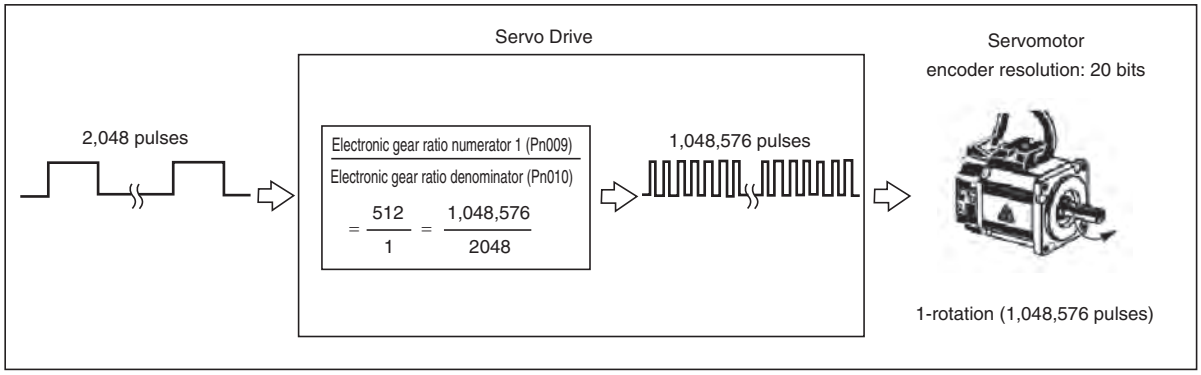

6-5 Encoder Dividing Function

Outline of Operation

- The number of output pulses from the drive can be adjusted.
- You can set the number of pulses per motor rotation in the range of 1 to (the number of encoder resolution pulses).
- This function is used in the following cases:
  - When you use a controller with a low response frequency
  - When you want to set the pulse rate corresponding to a certain value
    Example: Set the encoder dividing ratio to 2,000 (pulses/rotation) for when the resolution is set to 5 μm/pulse on mechanical systems that travel 10 mm per motor rotation.

Parameters Requiring Settings

Parameter number	Parameter name	Explanation	Reference
Pn011	Encoder Dividing Numerator	Set the number of phase-A and phase-B output pulses, respectively per motor rotation.	P.8-6
Pn012	Encoder Output Direction Switching Selection	Select the phase B logic for pulse regeneration output and the output source.	P.8-6
Pn503	Encoder Dividing Denominator	Set the denominator when the number of pulses per motor rotation in pulse regeneration is not an integer.	P.8-47
Pn533	Pulse Regeneration Output Limit Setting	Set whether to enable or disable the detection of Alarm 28.0 "pulse regeneration error." 0: Disabled, 1: Enabled	P.8-59
Pn620	External Encoder Phase-Z Setting	Set the external encoder phase-Z output width.	P.8-62
Pn621	Serial Absolute External Encoder Phase-Z Setting	Set the phase-Z regeneration position when the serial absolute external encoder is used. 0: Phase-Z output only at a position where the absolute position is 0 1 to 2^{28}: After a phase-Z output at the position where the absolute position is 0, phase Z is output every set value pulse cycle. No phase-Z is output until passing absolute position 0	P.8-62
Pn622	Phase AB External Encoder Pulse Output Method Selection	Select the regeneration method of pulse outputs OA and OB when an external encoder of phase AB-output type is used. 0: Without signal regeneration. 1: With signal regeneration for phase-A and phase-B. Without signal regeneration for phase-Z.	P.8-63

Encoder Dividing Ratio Setting (Pn011, Pn503)

Encoder Dividing Numerator (Pn011)	Encoder Dividing Denominator (Pn503)	Explanation
1 to 262144	0	When the output source is the encoder When Encoder Dividing Denominator (Pn503) = 0 This is set by Encoder Dividing Numerator (Pn011), and the output pulse is the number of pulses set by Encoder Dividing Numerator (Pn011) as follows. 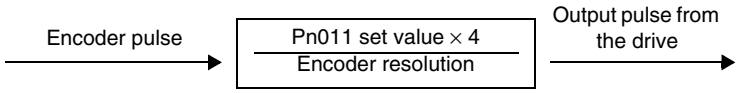 Number of pulse output per rotation = Encoder Dividing Numerator (Pn011) × 4 When the output source is the external encoder When Encoder Dividing Denominator (Pn503) = 0 The dividing ratio is 1:1. 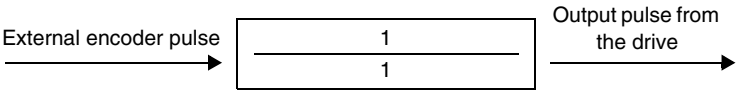
1 to 262144	1 to 262144	When Encoder Dividing Denominator (Pn503) ≠ 0 The output pulse will be as follows based on Encoder Dividing Numerator (Pn011) and Encoder Dividing Denominator (Pn503). 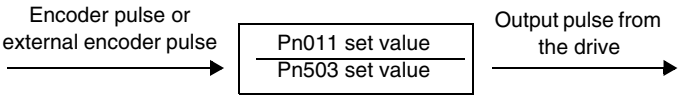 $\text{Number of pulse output per rotation} = \frac{\text{Encoder Dividing Numerator (Pn011)}}{\text{Encoder Dividing Denominator (Pn503)}} \times \text{encoder resolution}$

1 phase-Z signal is output by 1 pulse per motor rotation. When the Encoder Dividing Denominator (Pn503) ≠ 0, and if the pulse output resolution per rotation is not a multiple of 4, phase-Z and phase-A outputs are not synchronized. The output will be made as an encoder resolution, resulting in narrower width.

Phase Z Signal Output

If Pn011 and Pn503 are integers

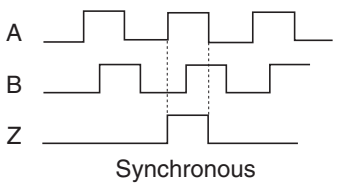

Synchronous

If Pn011 and Pn503 are not integers

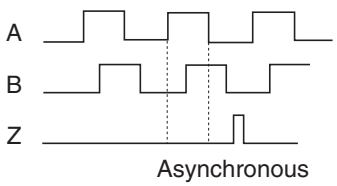

Asynchronous

Encoder Output Direction Switching Selection (Pn012)

The corresponding external encoders for each output type are given in the following table.

Encoder Output Direction Switching Selection (Pn012)	Output source	Phase B logic	For forward direction operation	For reverse direction operation
0	Encoder	Non-reverse	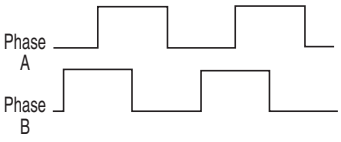	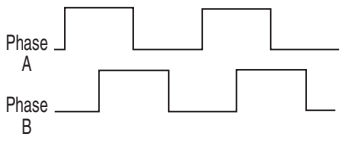
2	External encoder			
1	Encoder	Reverse	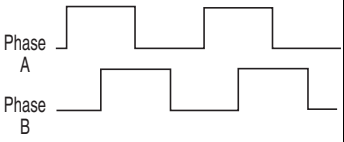	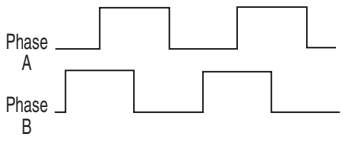
3	External encoder			

External Encoder Pulse Regeneration Function

Serial Absolute External Encoder

Phase Z is output only after the control power supply for amplifier is turned ON and when it crosses the zero absolute position of the external encoder. Based on this position, phase Z is output at the intervals of phase-A pulse that is set to Pn621. However, if Pn621 = 0, phase Z is output only at the zero absolute position.

Serial Incremental External Encoder

Phase Z is output without dividing the phase Z of the serial incremental external encoder. In addition, take note that there are differences as illustrated in the figure below depending on the direction passing phase Z.

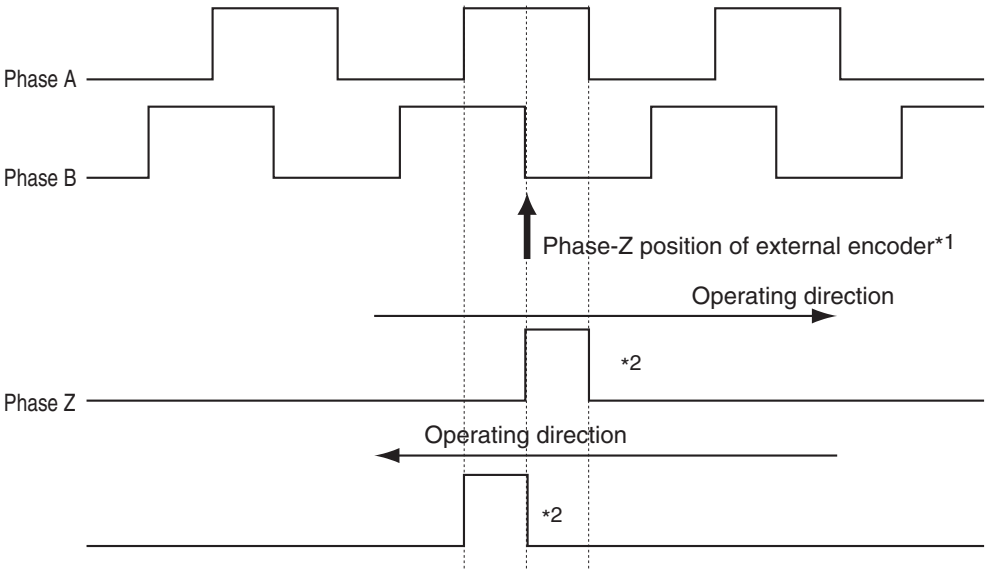

*1. Phase-Z position and its relationship with phases A and B vary depending on the scale.

*2. Phase Z is regenerated for 1 pulse. If the width is narrow, the output time can be extended by the External Encoder Phase Z Setting (Pn620).

ABZ Parallel External Encoder

- Phase Z is output without dividing the Z signal that is input from the ABZ parallel external encoder.
- When the Phase-AB External Encoder Pulse Output Method Selection (Pn622) = 1, the phase-AB signal can be loaded to the amplifier and regenerated.Note, in this case, that the phase-AB regeneration will be delayed compared to when Pn622 is set to 0.

External Encoder Common Items

- When detection cannot be made because the phase-Z signal width is narrow due to the external encoder travel distance, if you set the phase-Z signal output time in the External Encoder-Z Setting (Pn620), phase Z can be output at least for that period of time.
  In addition, take note that the output is made from when the phase-Z signal starts and, therefore, it will be different from the actual phase-Z signal width. Take note, also, that the direction of the time extension varies depending on the direction of the operation.

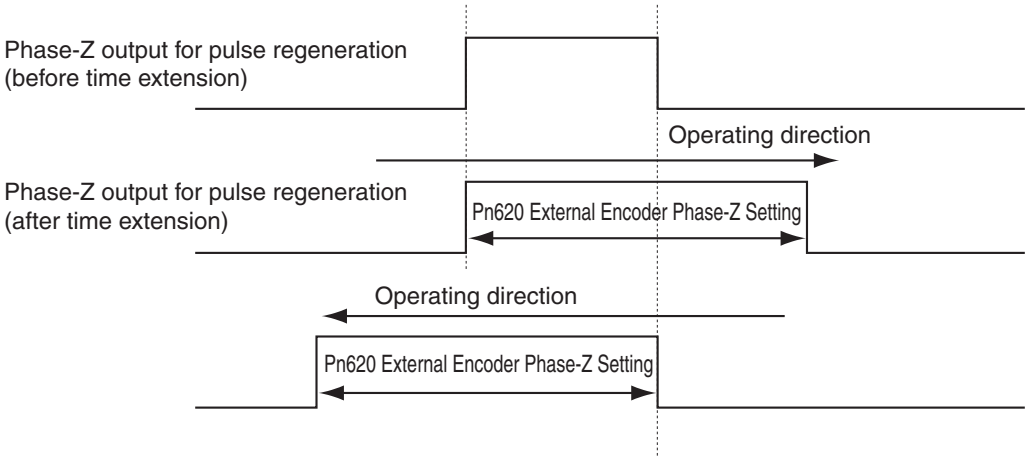

Precautions for Correct Use

- The maximum output frequency of the pulse regeneration output will be 4 Mpps (after quadruple multiplier). If operated at a speed that exceeds this, the regeneration function may not operate properly and position misalignment may result.

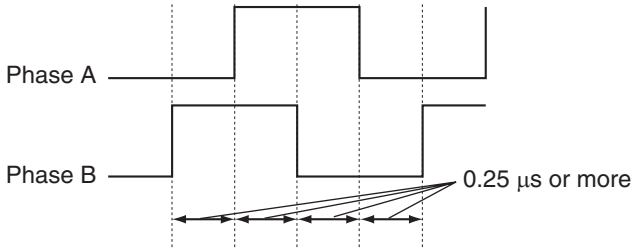

  - You can generate Alarm 28.0 "pulse regeneration error" when the pulse regeneration limit is reached based on the Pulse Regeneration Output Limit Setting (Pn533). Note that this alarm is generated when the pulse regeneration output limit is detected. Therefore, the alarm does not occur due to the maximum output frequency. Depending on the motor rotation status (uneven rotations), the alarm may occur when the detection is made at the frequency that goes up momentarily.
  - Take not that if the encoder is used as the output source and the pulse output resolution per rotation is not a multiple of 4, phase Z and phase A are not synchronized, and the width may be narrow.

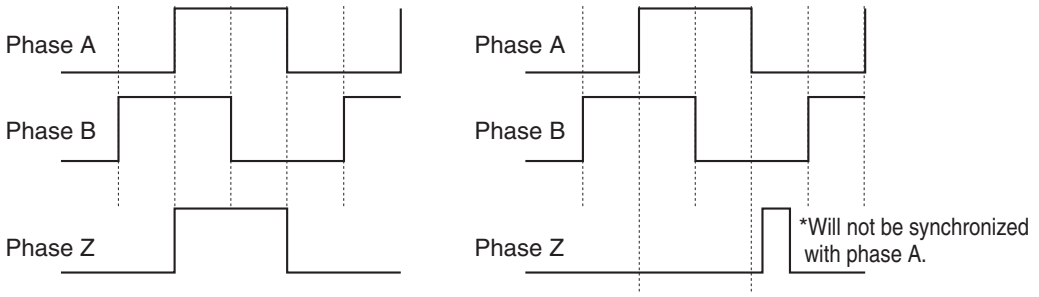

When the dividing ratio is multiple of 4 When the dividing ratio is not multiple of 4

Note: When Pn503 = 0 and the output resolution is set to Pn011, the dividing ratio is always a multiple of 4.

- When en encoder with the incremental specifications is used, the first phase Z output after the power supply is turned ON may not always be within the above pulse width. When you are using the phase-Z signal, rotate the motor more than once after turning ON the power supply, and confirm that phase-Z regeneration has been performed once before using the second and subsequent phase Z outputs.

6-6 Brake Interlock

Outline of Operation

- This function lets you set the output timing for the brake interlock (BKIR) signal that activates the holding brake when the servo is turned ON, an alarm generates, or the servo is turned OFF.

Parameters Requiring Settings

Parameter number	Parameter name	Explanation	Reference
Pn437	Brake Timing when Stopped	Set the time after a servo OFF command is issued upon servo lock stop, until the brake interlock output (BKIR) signal turns OFF and power supply stops.	P.8-44
Pn438	Brake Timing during Operation	Set the time after a servo OFF command is issued while the motor is rotating, until the brake interlock output (BKIR) turns OFF and power supply stops. If the speed drops to the speed set inPn439 or below before the time set here elapses, BKIR will turn OFF.	P.8-44
Pn439	Brake Clear Speed Setting	To set the speed threshold for run time mechanical brake output determination.	P.8-45

Precautions for Correct Use of Holding Brake

- The brake on a Servomotor with a brake is a normally closed brake designed only to hold when the operation is stopped.
  Accordingly, set an appropriate time so that the brake actuates after the motor stops.
- If the brake is engaged while the Servomotor is rotating, the brake disc will wear abnormally or sustain damage, resulting in a bearing or encoder failure in the Servomotor.

Operation

Servo ON/OFF Operation Timings <when Motor Is Stopped>

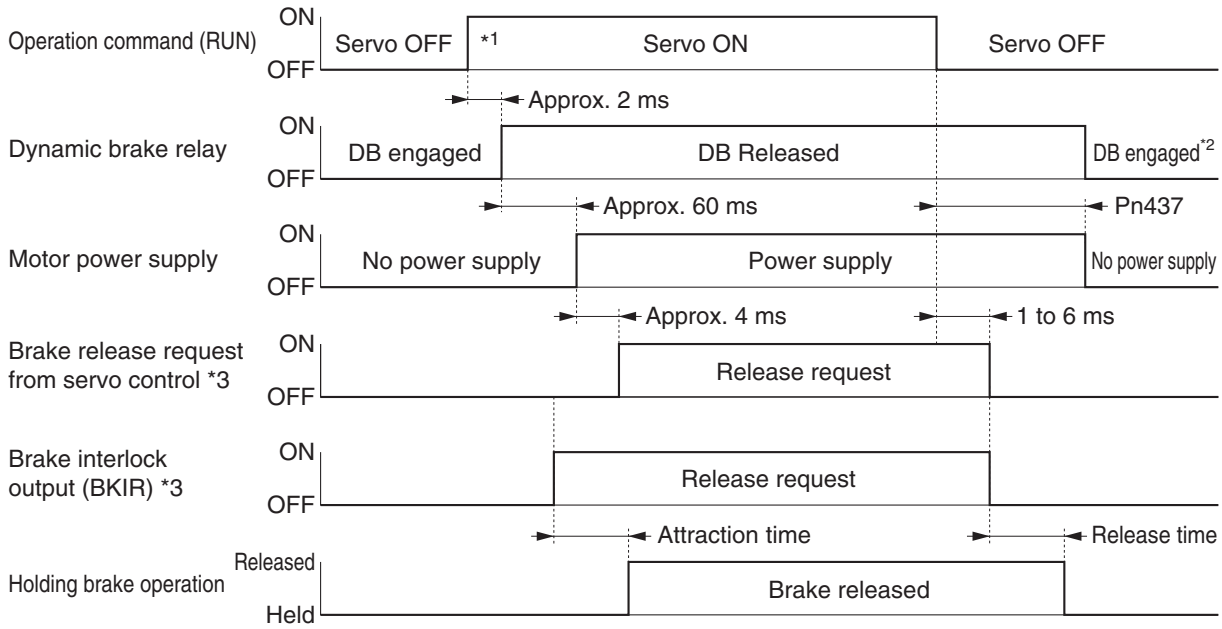

*1. The servo will not turn ON until the motor speed drops to the speed settings in Pn438 or Pn439 or below.

*2. The dynamic brake operation when the servo is OFF depends on Stop Selection with Servo OFF (Pn506).

*3. The brake interlock (BKIR) signal is output upon a release request from servo control. The BKIR signal is assigned to the general-purpose output (CN1).

Note:The brake application time and release time vary depending on the Servomotor brake. For details, refer to "3-3 Servomotor Specifications" (P.3-54).

Servo ON/OFF Operation Timings <When Motor Is Rotating>

Based on these operation timings, regenerative energy is produced if the motor rotation stops abnormally.
Accordingly, repeated operation cannot be performed. Provide a wait time of at least 10 minutes for the motor to cool down.

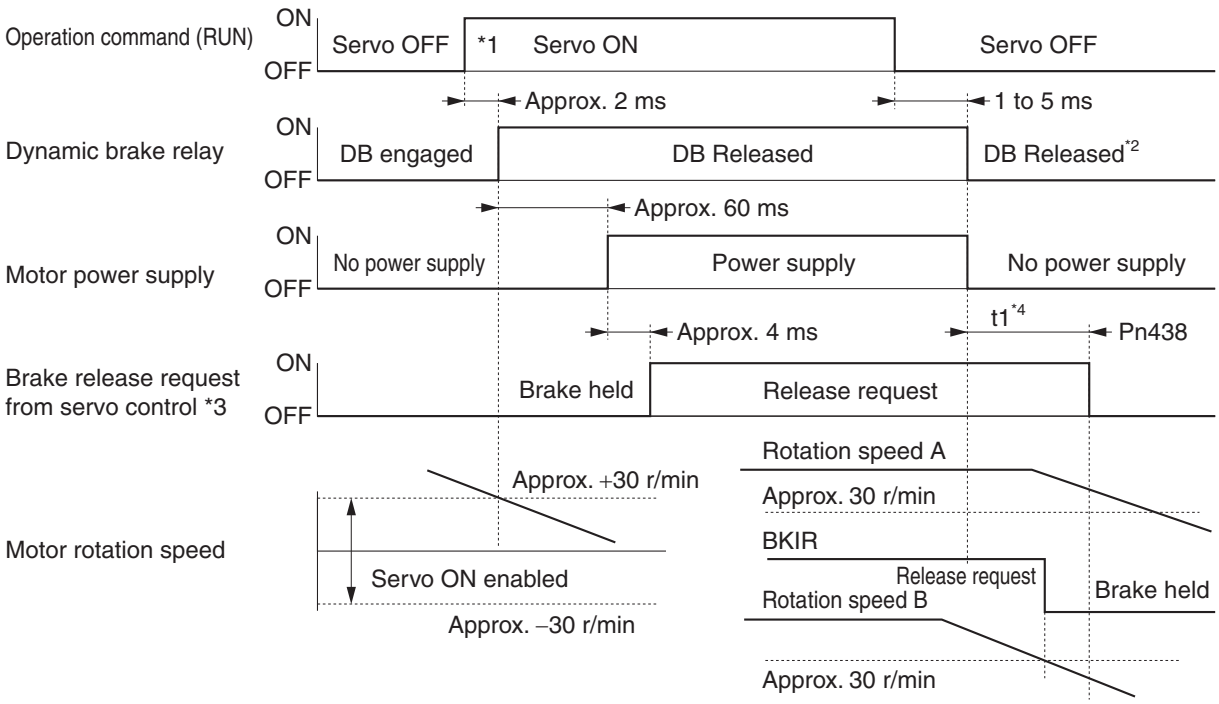

*1. The servo does not turn ON until the motor rotation speed drops to approx. 30 r/min or below.
*2. The dynamic brake operation when the servo is OFF depends on Stop Selection with Servo OFF (Pn506).
*3. The brake interlock (BKIR) signal is output upon a release request from servo control. The BKIR signal is assigned to the general-purpose output (CN1).
In the above example, no release request is received from the network.
*4. "t1" is either the time set for the Brake Timing during Operation (Pn438), or the time needed for the motor speed to drop to speed set in Brake Clear Speed Setting during Operation (Pn439) or below, whichever comes first.
Note:Even when the servo ON input is turned ON again while the motor is decelerating, the system does not enter the servo ON state until the motor stops.

Operation Timings when Alarm Generates (Servo ON)

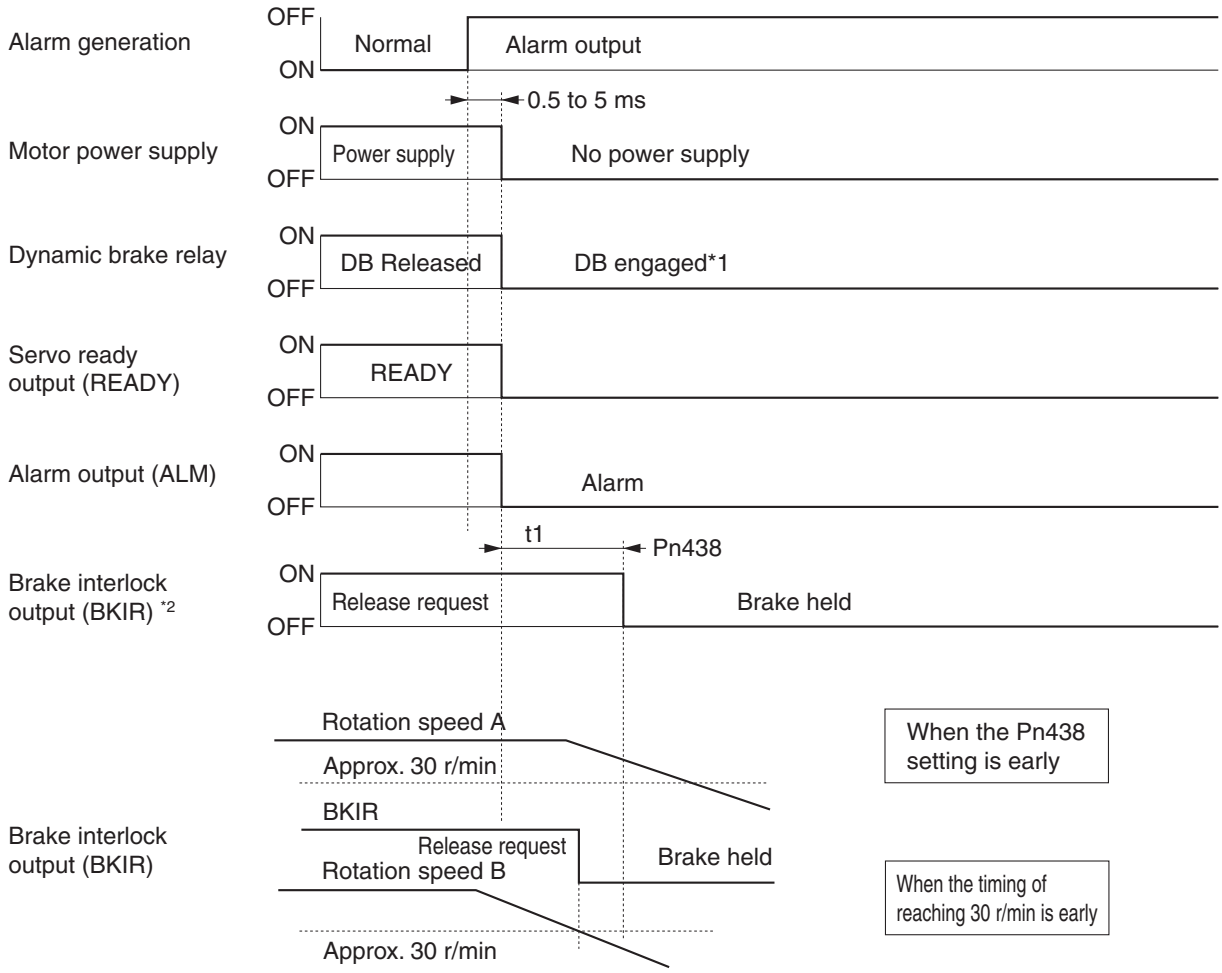

*1. The dynamic brake operation when an alarm generates depends on Stop Selection with Servo OFF (Pn506).

*2. t1 is the set value of Brake Timing during Operation (Pn438), or the time needed for the motor rotation speed to drop to 30 r/min or below, whichever occurs first.

Note 1.Even when the servo ON input is turned ON again while the motor is decelerating, the system does not enter the servo ON state until the motor stops. The BKIR signal is assigned to the general-purpose output (CN1).

Note 2.If the main circuit power supply turns OFF while the motor is operating, a phase loss alarm or main circuit voltage low alarm will occur, in which case this operation timing will be applied.

Operation Timings at Alarm Reset

Reset alarms by turning OFF the power supply and then turning it ON again.
The alarm reset input recognition time can be changed using Alarm Reset Condition Selection (Pn516). The default setting is 120 ms.

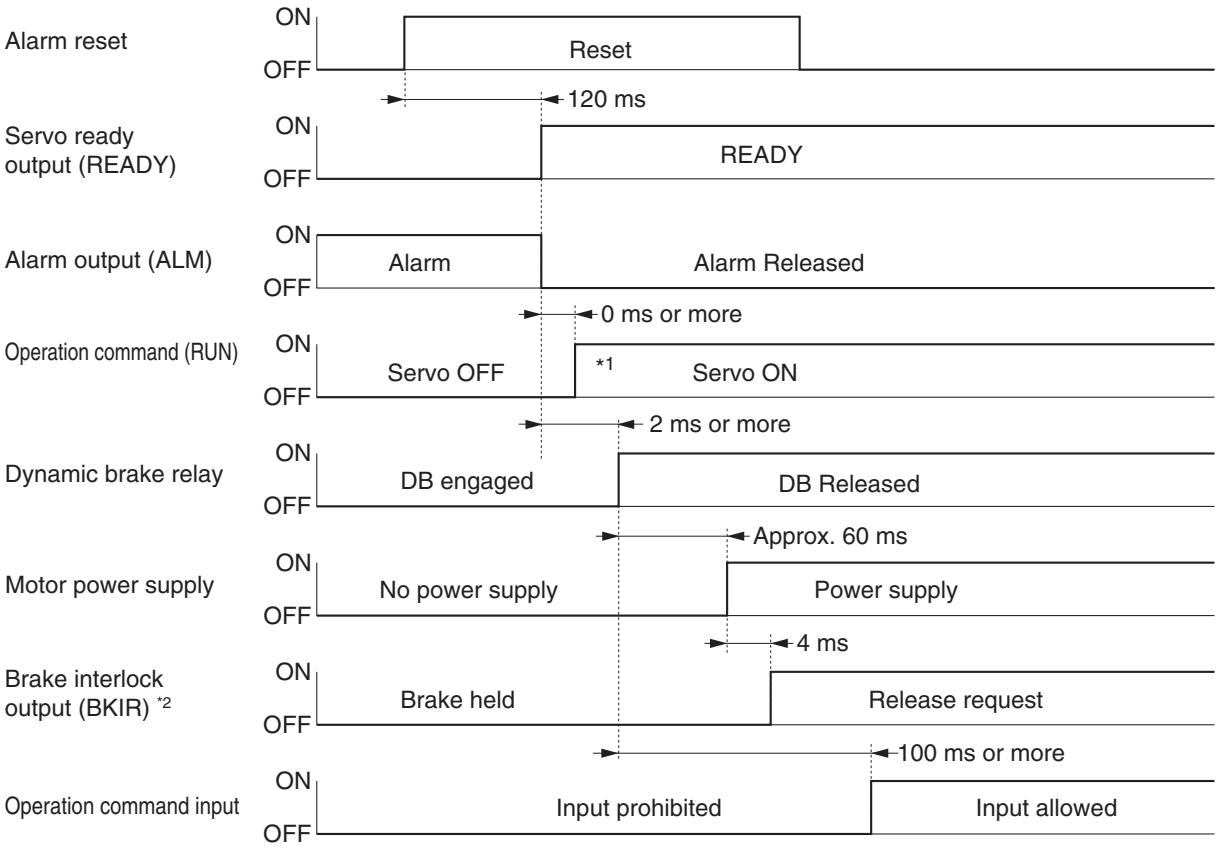

*1. The servo does not turn ON until the motor rotation speed drops to approx. 30 r/min or below.
*2. The brake interlock (BKIR) signal is output upon a release request from servo control. The BKIR signal is assigned to the general-purpose output (CN1).

Note: After the alarm has been reset, the system enters the servo OFF state (motor not excited). To turn the servo ON, issue a servo ON command again after resetting the alarm, according to the above timings.

6-7 Gain Switching Function

Outline of Operation

- This function switches the position loop and speed loop gain.
- Select enable or disable using Gain Switching Input Operating Mode Selection (Pn114). Set the switching condition using the gain switching setting.
- If the load inertia changes or you want to change the responsiveness depending on whether the motor is stopping and operating, you can perform optimal control by using gain switching.
- Use gain switching when the realtime autotuning does not work effectively, etc. (See below.)
  - When the load inertia fluctuates in 200 ms or less.
  - When the motor rotation speed does not exceed 500 r/min, or load torque does not exceed 50% of the rated torque.
  - When an external force is constantly applied, as with a vertical axis.

Note. When Gain 2 has been selected, realtime autotuning does not operate normally. If using the gain switching, set the Realtime Autotuning to "disabled" (Pn002 = 0).

Parameters Requiring Settings

Parameter number	Parameter name	Explanation	Reference
Pn114	Gain Switching Input Operating Mode Selection	Set whether to enable or disable the gain switching function.	P.8-12
Position Control Mode			
Pn115	Switching Mode in Position Control	Set the condition for switching between Gain 1 and Gain 2.	P.8-13
Pn116	Gain Switching Delay Time in Position Control	Set the time to return from Gain 2 to Gain 1. (Unit: 0.1 ms)	P.8-15
Pn117	Gain Switching Level in Position Control	Set the judgment level for switching between Gain 1 and Gain 2.	P.8-15
Pn118	Gain Switching Hysteresis in Position Control	Set the hysteresis width to be provided in the judgment level set in Gain Switching Level (Pn117).	P.8-15
Pn119	Position Gain Switching Time	Set the number of phased switches from low to high gain. (Unit: 0.1 ms)	P.8-15
Speed Control mode			
Pn120	Switching Mode in Speed Control	Set the condition for switching between Gain 1 and Gain 2.	P.8-16
Pn121	Gain Switching Delay Time in Speed Control	Set the time to return from Gain 2 to Gain 1. (Unit: 0.1 ms)	P.8-17
Pn122	Gain Switching Level in Speed Control	Set the judgment level for switching between Gain 1 and Gain 2.	P.8-17
Pn123	Gain Switching Hysteresis in Speed Control	Set the hysteresis width to be provided in the judgment level set in Gain Switching Level (Pn122).	P.8-17
Torque Control Mode			
Pn124	Switching Mode in Torque Control	Set the condition for switching between Gain 1 and Gain 2.	P.8-18
Pn125	Gain Switching Delay Time in Torque Control	Set the time to return from Gain 2 to Gain 1. (Unit: 0.1 ms)	P.8-19
Pn126	Gain Switching Level in Torque Control	Set the judgment level for switching between Gain 1 and Gain 2.	P.8-19
Pn127	Gain Switching Hysteresis in Torque Control	Set the hysteresis width to be provided in the judgment level set in Gain Switching Level (Pn126).	P.8-19

Diagrams of Gain Switching Setting

Switching between Gain 1 (Pn100 to Pn104) and Gain 2 (Pn105 to Pn109) occurs at the following times. Take note that, in the case of position loop gains, switching occurs based on the setting of Pn119.
For the details of each gain, refer to "Chapter 8, Parameter Details".

The details of the gain switching setting vary depending on the control mode used. For the details of settings available in each mode, refer to "Gain Switching Setting for Each Control Mode" (P.6-29).

Gain Switching Mode = 2: Gain Switching (GSEL)

Instant switching occurs when a gain switching command is issued from the network.

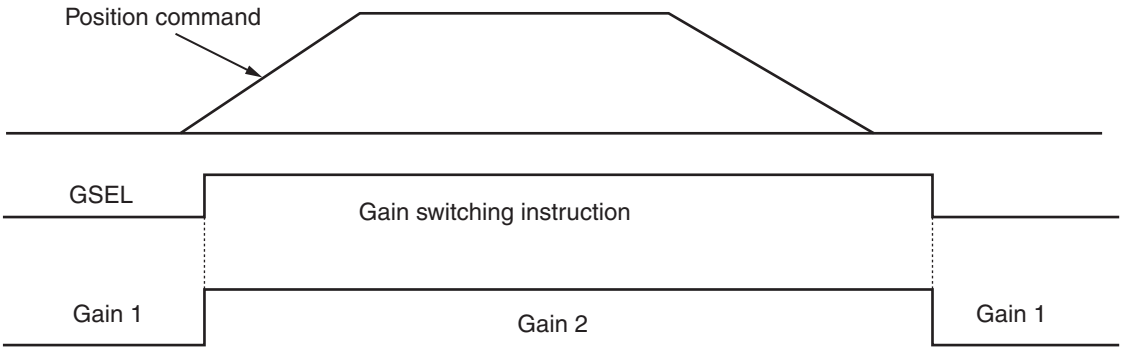

Gain Switching Mode = 3: Switching by Torque Command Change Amount

Torque command change amount (angular acceleration and deceleration speed command) is set in units of 0.05%/166 μs.

If the amount of change fluctuates and the switching time is not met, the switching will be cancelled.

In the case of switching due to a change amount of 4% over 2 ms, a value of approx. 6 will apply. (Change of 0.33% per 166 μs.)

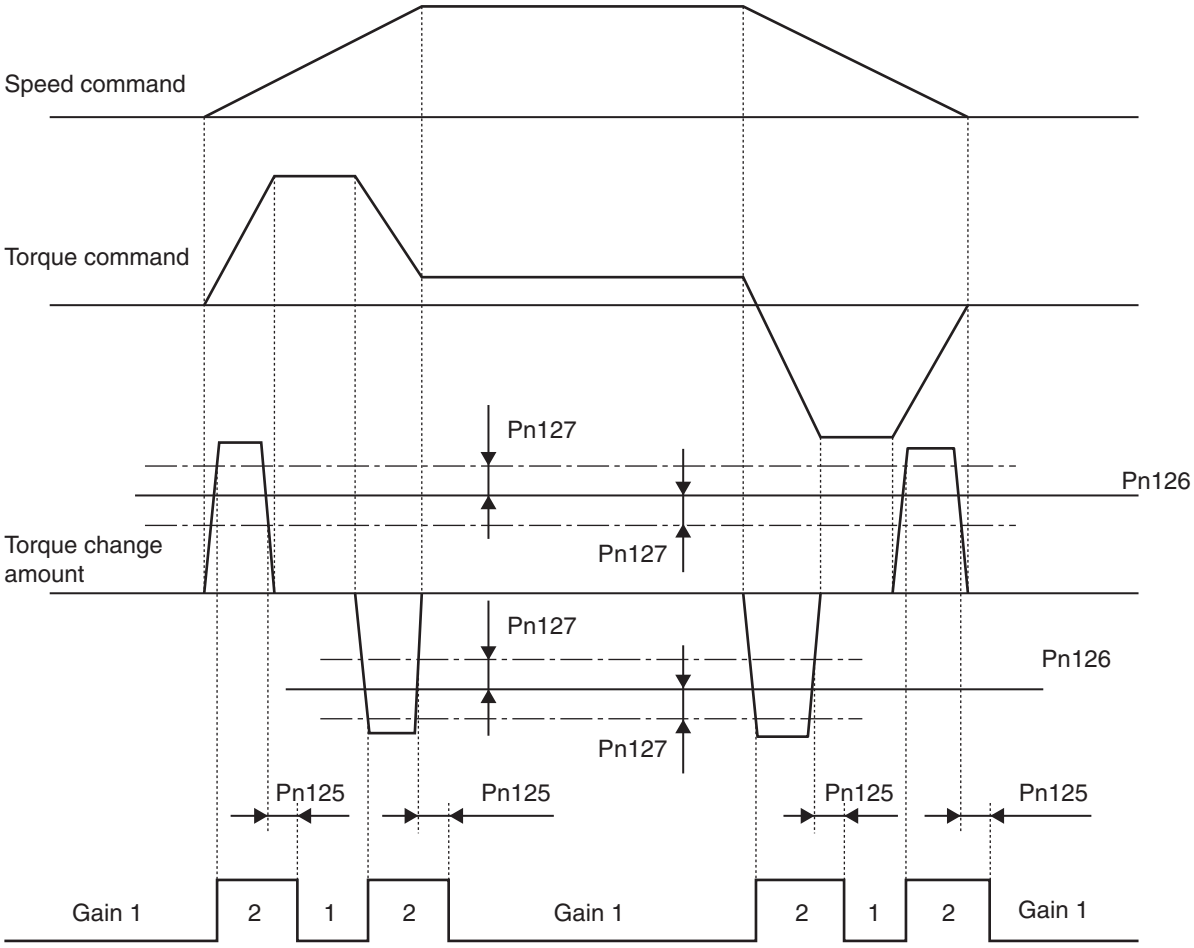

Gain Switching Mode = 5 or 9: Switching by Speed Command or Actual Motor Speed

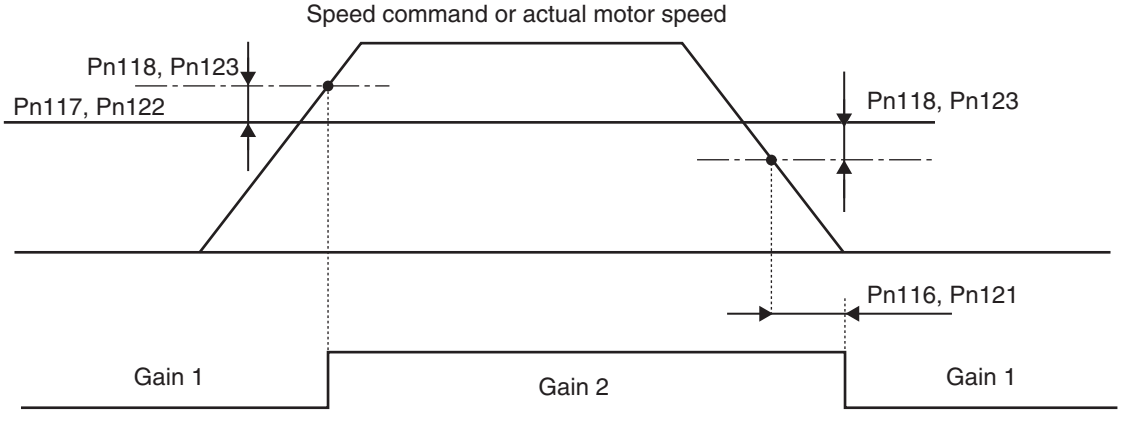

Gain Switching Mode (Pn031) = 6: Switching by Amount of Position Error

Gain switching is performed based on the accumulated count in the error counter.

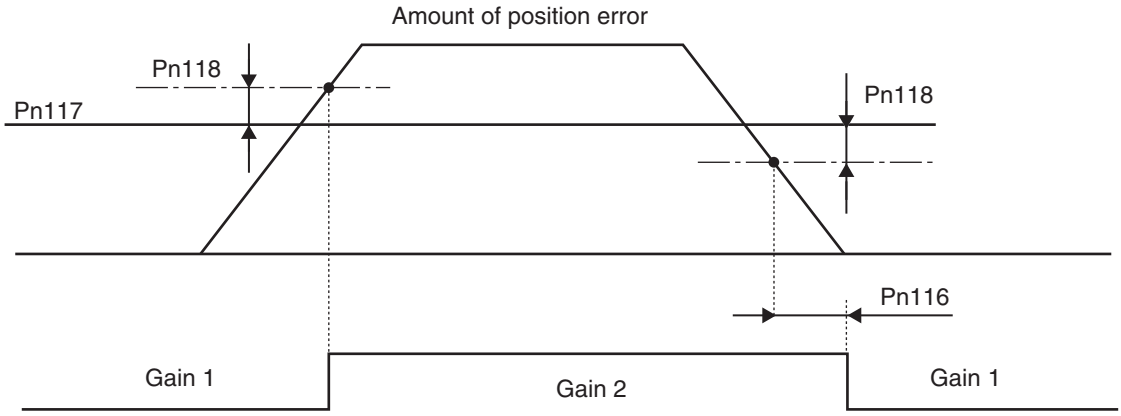

Gain Switching Mode = 7: Switching by Position Command Received

Gain switching is performed when a position command corresponding to 1 command unit or more is received.

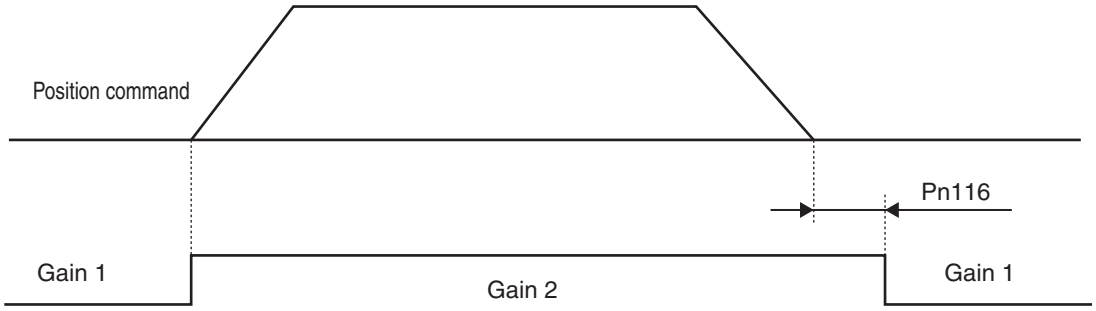

Gain Switching Mode = 8: Switching by Positioning Completion Signal OFF

Switching to the gain 2 is performed when the error counter accumulated pulse exceeds the Positioning Completion Range 1 (Pn431).

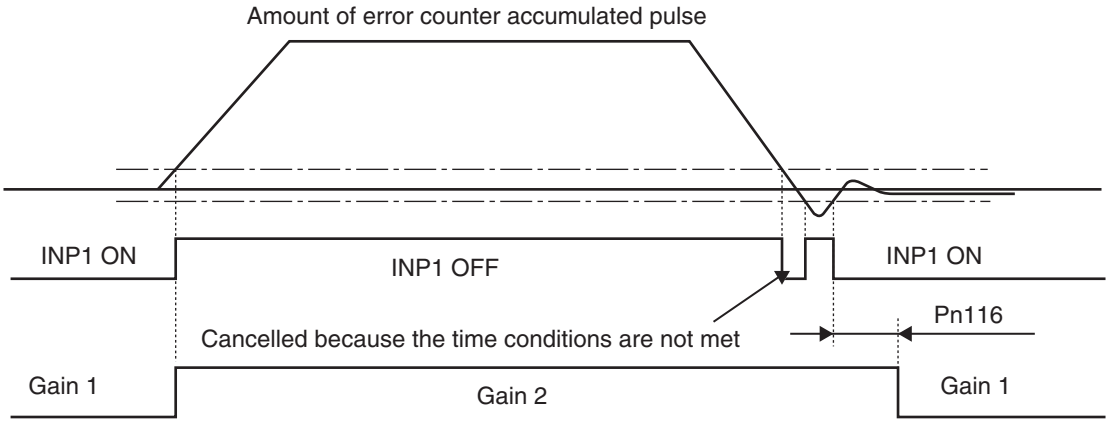

Gain Switching Mode = 10: Switching by Combination of Position Command Received and Speed

Switching to the gain 2 occurs when a position command is received.
If no position command is issued for the period of Gain Switching Delay Time in Speed Control (Pn121) and the speed also becomes the same as or less than the result of Gain Switching Level (Pn122) - Gain Switching Hysteresis (Pn123) [r/min], switching to the gain 1 will occur.

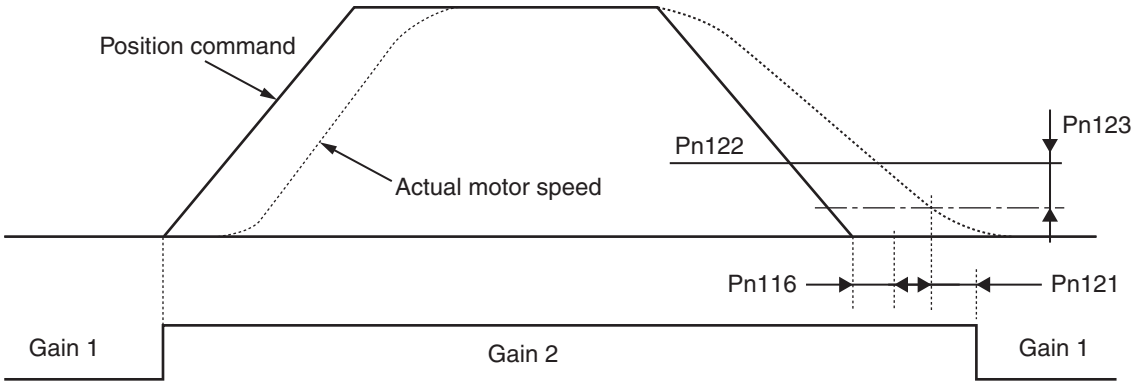

Timing for Position Gain Switching Time (Pn119)

You can suppress rapid increases in the position loop gain during position control when there is a large difference between Position Loop Gain 1 (Pn100) and Position Loop Gain 2 (Pn105). When the position loop gain increases, it will be changed over the specified time.

Position Gain Switching Time

The Position Gain Switching Time (Pn119) can be set to reduce torque variations and vibration caused by a rapid increase in the position loop gain that can occur when the gain is switched during position control or fully closed control.

Precautions for Correct Use

- When the position loop gain is switched to a smaller value, the setting of this parameter will be ignored and the gain will be switched immediately.
  Example Gain 1 (Pn100) > Gain 2 (Pn105)

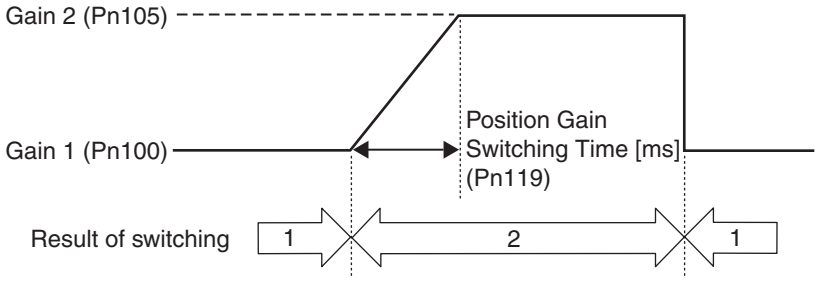

Gain Switching Setting for Each Control Mode

The settable switching conditions vary depending on the control mode used. Set the parameters for each control mode.

Position Control Mode

In the Position Control Mode, it varies as follows according to gain switching mode in Position Control (Pn115).

(√: Enabled, – : Disabled)

Pn115 set value	Switching conditions	Gain Switching Delay Time (Pn116)	Gain Switching Level (Pn117)	Gain Switching Hysteresis (Pn118)	Position Gain Switching Time (Pn119)
0	Always gain 1	–	–	–	–
1	Always gain 2	–	–	–	–
2	Switching from gain switching (GSEL)	–	–	–	√
3	Torque command change amount	√	√ [× 0.05%]	√ [× 0.05%]	√
4	Always gain 1	–	–	–	–
5	Command speed	√	√ [r/min]	√ [r/min]	√
6	Amount of position error	√	√ [pulse]	√ [pulse]	√
7	Position command received	√	–	–	√
8	Positioning completion signal (INP1) OFF	√	–	–	√
9	Actual motor speed	√	√ [r/min]	√ [r/min]	√
10	Combination of position command received and speed	√	√	√	√

Speed Control Mode

In the Speed Control Mode, it varies as follows according to switching mode in Speed Control (Pn120).

(√: Enabled, – : Disabled)

Pn120 set value	Switching conditions	Gain Switching Delay Time (Pn121)	Gain Switching Level (Pn122)	Gain Switching Hysteresis (Pn123)
0	Always gain 1	–	–	–
1	Always gain 2	–	–	–
2	Switching from gain switching (GSEL)	–	–	–
3	Torque command change amount	√	√ [× 0.05%]	√ [× 0.05%]
4	Amount of change in speed command	–	–	–
5	Speed command	√	√ [r/min]	√ [r/min]

Torque Control Mode

In the Torque Control Mode, it varies as follows according to switching mode in Torque Control (Pn124).

(√: Enabled, – : Disabled)

Pn124 set value	Switching conditions	Gain Switching Delay Time (Pn125)	Gain Switching Level (Pn126)	Gain Switching Hysteresis (Pn127)
0	Always Gain 1	–	–	–
1	Always Gain 2	–	–	–
2	Switching from gain switching (GSEL)	–	–	–
3	Torque command change amount	√	√ [× 0.05%]	√ [× 0.05%]

6-8 Gain Switching 3 Function

Outline of Operation

You can newly set gain 3 right before stopping to the gain switching function of Gain Switching Input Operating Mode Selection (Pn114).
You can use the gain 3 switching function in the following situations for position control or fully-closed control.

- When servo is ON
- When there is no trouble with the motor's normal rotation

Parameters Requiring Settings

Parameter number	Parameter name	Explanation	Reference
Pn605	Gain 3 Effective Time	Set effective time of gain 3.	P.8-60
Pn606	Gain 3 Ratio Setting	Set gain 3 as a multiple of gain 1.	P.8-60

Operation

Operation Timings of Gain 1, 2 and 3

Example: When the switching mode in position control = 7 and the switching condition is set to position command received

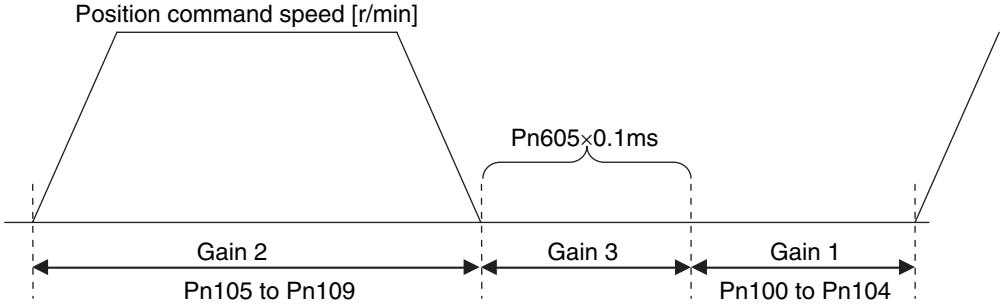

Gain 3 region

Position loop gain=Pn100×Pn606/100

Speed loop gain=Pn101×Pn606/100

The gain 1 value is used for the speed loop integral time constant, speed feedback filter time constant, and torque command filter time constant.

Precautions for Correct Use

- If gain 3 is not used, set the Gain 3 Effective Time (Pn605) to 0 and Gain 3 Ratio Setting (Pn606) to 0.
- In the gain 3 region, only the position loop gain and the speed loop gain are treated as gain 3, and the gain 1 setting is applied for all other gains.
- If the gain 2 switching condition is established in the gain 3 region, operation switches to gain 2.
- If gain 2 is switching to gain 3, Position Gain Switching Time (Pn119) is enabled.
- Take note that there will be a gain 3 region even when gain 2 is switched to gain 1 due to a parameter change and so forth.

6-9 Torque Limit

Outline of Operation

- The output torque by the Servomotor can be limited.
- This function is used in the following conditions.
  - When push-motion operation, such as pressing, is performed.
  - When the torque at startup and during deceleration should be suppressed to protect the mechanical system, etc.
- Various methods are available according to Torque Control Selection (Pn521).

Parameters Requiring Settings

Parameter number	Parameter name	Explanation	Reference
Pn521	Torque Limit Selection	Select the torque limit based on the various parameters and input signals.	P.8-56
Pn013	No. 1 Torque Limit	Set the No. 1 motor output torque limit value.	P.8-7
Pn522	No. 2 Torque Limit	Set the No. 2 motor output torque limit value.	P.8-56
Pn523	Torque Limit Switching Setting 1	Set the rate of change (fluctuate) when switching from the No. 1 torque limit to No. 2 torque limit.	P.8-57
Pn524	Torque Limit Switching Setting 2	Set the rate of change (fluctuate) when switching from the No. 2 torque limit to No. 1 torque limit.	P.8-57
Pn525	Forward External Torque Limit	Set the forward torque limit for a network signal.	P.8-57
Pn526	Reverse External Torque Limit	Set the reverse torque limit for a network signal.	P.8-57
Pn527	Analog Torque Limit Scale	Set the gain for conversion for the analog torque limit input.	P.8-57
Pn425	Analog Input 2 Offset	Set the offset adjustment value for the voltage applied to analog input 2.	P.8-40
Pn426	Analog Input 2 Filter Time Constant	Set the time constant of the first-order lag filter for the voltage applied to analog input 2.	P.8-40
Pn428	Analog Input 3 Offset	Set the offset adjustment value for the voltage applied to analog input 3.	P.8-41
Pn429	Analog Input 3 Filter Time Constant	Set the time constant of the first-order lag filter for the voltage applied to analog input 3.	P.8-41

Torque Limit in Position, Speed and Fully-Closed Controls

Pn521 set value	Explanation
0	Forward operation: Set by PCL (0 to 10 V) Reverse operation: Set by NCL (−10 to 0 V)
1	Limit in both forward and reverse operation: Set by Pn013
2	Forward operation: Set by Pn013 Reverse operation: Set by Pn522
3	Switch the limit value using torque limit switching (TLSEL). When TLSEL is OFF Limit in both forward and reverse operation: Pn013 When TLSEL is ON Limit in both forward and reverse operation: Pn522
4	Forward operation: Set by PCL (0 to 10 V) Reverse operation: Set by NCL (0 to 10 V)
5	Limit in both forward and reverse operation: Set by PCL (0 to 10 V)
6	Switch the limit value using torque limit switching (TLSEL). When TLSEL is OFF Forward operation: Pn013 Reverse operation: Pn522 When TLSEL is ON Forward operation: Pn525 Reverse operation: Pn526

- For the torque limit in torque control, always select No. 1 Torque Limit (Pn013).
- The torque limit under torque feed-forward selection is enable only during speed control when the set value is 1 to 3.
- PCL signal is assigned to the terminal 16 in CN1. For details, refer to “Torque Command Input 2 (TREF2) and Forward Torque Limit Input (PCL)” (P. 3-32).
- NCL signal is assigned to the terminal 18 in CN1. For details, refer to "Reverse Torque Limit Input (NCL)" (P. 3-32).

Rate of Change Setting at Switching (Pn521 = 3)

If 3 is set in Torque Limit Selection (Pn521), you can add fluctuate the change at the time of switching. This function is disabled in any other setting.

How to Set Rate of Change (Fluctuate)

Set the parameter according to the switching type.

- From No. 1 torque limit to No. 2 torque limit: Pn523
- From No. 2 torque limit to No. 1 torque limit: Pn524

The sign of the rate of change switches automatically inside the drive based on the magnitude correlation of the No. 1 torque limit and No. 2 torque limit.

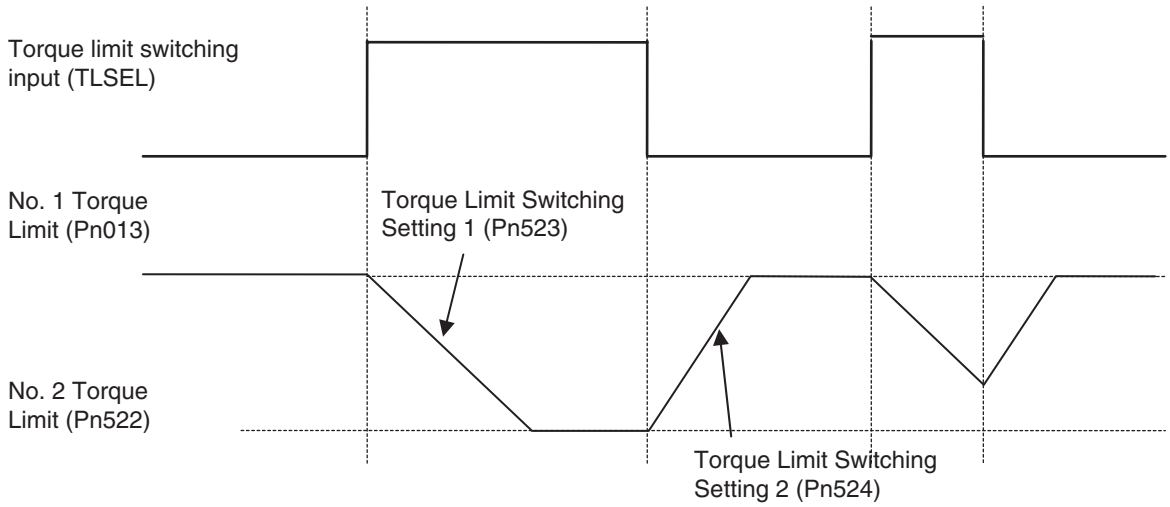

If the setting of No. 1 Torque Limit (Pn013) or No. 2 Torque Limit (Pn522) is changed from the front panel or CX-Drive, the rate of change setting will be ignored and the new torque limit value will be applied immediately.

Torque Limit Settings by Servomotors

- The torque limit setting range is between 0% and 300%. The default setting is 300%. This is not the case when a Servo Drive and a Servomotor are used in the following combinations.

Servo Drive	Applicable Servomotor	Maximum torque limit [%]
R88D-KT15□	R88M-K90010□	225
R88D-KT30□	R88M-K2K010□	250
R88D-KT50□	R88M-K3K010□	250

6-10 Sequence I/O Signal

Outline of Operation

- You can set sequences in various operating conditions.
- For the connection of I/O signals and processing of external signals, refer to "Control I/O Connector Specifications (CN1)" (P.3-13).

Input Signals

You can allocate any function of input signals to the input pins for the control I/O connector (CN1). In addition, you can change logic. However, refer to "Input Signal Allocation Method" (P.6-37) for more information because some signals have allocation limitations.
If a G-series Servo Drive is being replaced with a G5-series Servo Drive, use the G5-series Servo Drive with the default settings.

Input Signal Default Setting

The allocations of the default input signals are as follows. Refer to "Input Signal Allocation Method" when you change the allocation to use.

Applicable parameters	Input signals	Factory default setting (hex)	Default setting state					
			Position control or fully-closed control		Speed control		Torque control	
			Signal name	Logic	Signal name	Logic	Signal name	Logic
Pn400	SI1 input	00828282h (8553090)	NOT	NC	NOT	NC	NOT	NC
Pn401	SI2 input	00818181h (8487297)	POT	NC	POT	NC	POT	NC
Pn402	SI3 input	0091910Ah (9539850)	DFSEL1	NO	VZERO	NC	VZERO	NC
Pn403	SI4 input	00060606h (394758)	GSEL	NO	GSEL	NO	GSEL	NO
Pn404	SI5 input	0000100Ch (4108)	GESEL1	NO	VSEL3	NO	–	–
Pn405	SI6 input	00030303h (1979379)	RUN	NO	RUN	NO	RUN	NO
Pn406	SI7 input	00000f07h (3847)	ECRST	NO	VSEL2	NO	–	–
Pn407	SI8 input	00040404h (263172)	RESET	NO	RESET	NO	RESET	NO
Pn408	SI9 input	00050505h (328965)	TVSEL	NO	TVSEL	NO	TVSEL	NO
Pn409	SI10 input	00000E88h (3720)	IPG	NC	VSEL1	NO	–	–

Contacts NO and NC in the logic fields indicate the following statuses.

NO: Disabled (OFF) when signal input is open with COM–
Enabled (ON) when signal input is shorted with COM–

NC: Disabled (OFF) when signal input is shorted with COM–
Enabled (ON) when signal input is open with COM–
"–" indicates the status where no function is allocated.

Parameters that Can Be Allocated

Use the following parameters when changing the input signal allocation to use.
For the setting method, refer to "Input Signal Allocation Method".

Parameter number	Parameter name	Explanation	Reference
Pn400	Input Signal Selection 1	Set the SI1 input function allocation. This parameter is based on the hex display standard. (The display on the front panel is based on decimal.)	P.8-36
Pn401	Input Signal Selection 2	Set the SI2 input function allocation.	P.8-36
Pn402	Input Signal Selection 3	Set the SI3 input function allocation.	P.8-36
Pn403	Input Signal Selection 4	Set the SI4 input function allocation.	P.8-36
Pn404	Input Signal Selection 5	Set the SI5 input function allocation.	P.8-36
Pn405	Input Signal Selection 6	Set the SI6 input function allocation.	P.8-36
Pn406	Input Signal Selection 7	Set the SI7 input function allocation.	P.8-36
Pn407	Input Signal Selection 8	Set the SI8 input function allocation.	P.8-36
Pn408	Input Signal Selection 9	Set the SI9 input function allocation.	P.8-36
Pn409	Input Signal Selection 10	Set the SI10 input function allocation.	P.8-36

Input Signal Allocation Method

Input the setting for each control mode in any of the parameters of Pn400 to Pn409 to allocate signals.

Set the parameters based on the hex display standard.
Set the set value of the function for each control mode in "**" below.
Refer to the function number table provided below for the set value of each function. The logic setting is included in the function numbers.

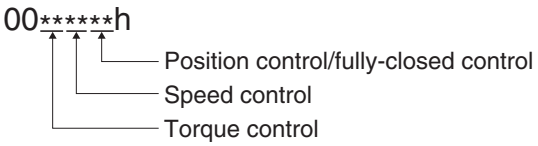

Example:
Position control or fully-closed control: Electronic gear switching input 1 for contact NO (0Ch)
Speed control: Internally set speed selection 1 for contact NC (8Eh)
Torque control: Disabled (00h)

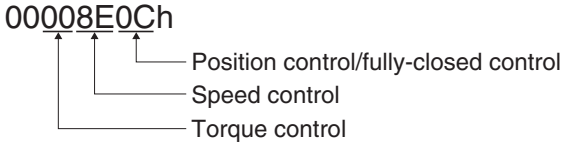

This will be 36364 since the front panel display is in decimal numbers.

Function Number Table

The set values to be used for allocations are as follows:

Signal name	Symbol	Set value	
		NO	NC
Disabled	–	00h	Setting not available
Forward drive prohibition input	POT	01h	81h
Reverse drive prohibition input	NOT	02h	82h
Operation command *1	RUN	03h	83h
Alarm reset input	RESET	04h	Setting not available
Control mode switching input	TVSEL	05h	85h
Gain switching	GSEL	06h	86h
Error counter reset input *2	ECRST	07h	Setting not available
Pulse prohibition input *3	IPG	08h	88h
Torque limit switching	TLSEL	09h	89h
Damping filter switching 1	DFSEL1	0Ah	8Ah
Damping filter switching 2	DFSEL2	0Bh	8Bh
Electronic gear switching input 1	DIV1	0Ch	8Ch
Electronic gear switching input 2	DIV2	0Dh	8Dh
Internally set speed selection 1	VSEL1	0Eh	8Eh
Internally set speed selection 2	VSEL2	0Fh	8Fh
Internally set speed selection 3	VSEL3	10h	90h
Zero speed designation input	VZERO	11h	91h
Speed command sign input	VSIGN	12h	92h
Torque command sign input	TSIGN	13h	93h
Forced alarm input	E-STOP	14h	94h
Inertia ratio switching input	J-SEL	15h	95h

*1 The operation command (RUN) always needs to be allocated. Servo cannot be turned ON if it is not allocated.

*2 Allocate this to Input Signal Selection 7 (Pn406). An alarm will occur if it is allocated to anything other than that.

*3 Allocate this to Input Signal Selection 10 (Pn409). An alarm will occur if it is allocated to anything other than that.

Precautions for Correct Use

- Do not use any values other than the settings listed.
- If you allocate the same function to multiple input signals, interface input duplicate allocation error 1 (Alarm 33.0) or interface input duplicate allocation error 2 (Alarm 33.1) will occur.
- You can allocate error counter reset input (ECRST) to Input Signal Selection 7 (Pn406) only. If you allocate it to anything other than that, a counter reset allocation error (Alarm 33.6) will occur.
- You can allocate pulse prohibition input (IPG) to Input Signal Selection 10 (Pn409) only. If you allocate it to anything other than that, a command pulse prohibition input allocation error (Alarm 33.7) will occur.
- If you are using the control mode switching input (TVSEL), you must set it for all control mode. If you do not set it for all control mode, interface input function number error 1 (Alarm 33.2) or interface input function number error 2 (Alarm 33.3) will occur.
- If you set Zero Speed Designation Selection (Pn315) to 2 or 3, you must always allocate zero

speed designation input (VZERO) in speed control for the same pin where zero speed designation input (VZERO) is allocated for speed control. In addition, specify the same settings for the logic.

- Be sure to allocate the functions that are used by multiple control mode (such as operation command and alarm reset input) to the same pin, and do the same for the logic. If this is not set correctly, interface input duplicate allocation error 1 (Alarm 33.0) or interface input duplicate allocation error 2 (Alarm 33.1) will occur.
- You must always allocate the operation command (RUN). Servo cannot be turned ON if it is not allocated.

Output Signals

You can allocate output signal functions to the output pins for the control I/O connector (CN1). If a G-series Servo Drive is being replaced with a G5-series Servo Drive, use the G5-series Servo Drive with the default settings.

Output Signal Default Setting

The allocations of the default output signals are as follows. Refer to "Output Signal Allocation Method" when you change the allocation to use.

Applicable parameters	Output Signals	Default set value	Default setting state		
			Position control or fully-closed control	Speed control	Torque control
			Signal name	Signal name	Signal name
Pn410	SO1 output	00030303h (197379)	BKIR	BKIR	BKIR
Pn411	SO2 output	00020202h (131586)	READY	READY	READY
Pn412	SO3 output	*1	ALM	ALM	ALM
Pn413	SO4 output	00050504h (328964)	INP	TGON	TGON

*1 Alarm output signal allocations cannot be changed.

Parameters that Can Be Allocated

Use the following parameters when changing the output signal allocation to use.
For the setting method, refer to "Output Signal Allocation Method".

Parameter number	Parameter name	Explanation	Reference
Pn410	Output Signal Selection 1	Set the SO1 output function allocation. This parameter is set in hexadecimal standard. Refer to the output signal function number table for details.	P.8-36
Pn411	Output Signal Selection 2	Set the SO2 output function allocation.	P.8-36
Pn412	Output Signal Selection 3	Set the SO3 output function allocation. This parameter is always fixed to the alarm output signals.	P.8-36
Pn413	Output Signal Selection 4	Set the SO4 output function allocation.	P.8-36

Output Signal Allocation Method

Input the setting for each control mode in any of the parameters of Pn410 to Pn413 to allocate signals.

Set up the parameters based on the hex display standard in the same manner as the input signal allocation method.
Set the set value of the function for each control mode in "**" below.
Refer to the function number table provided below for the set value of each function. The logic setting is included in the function numbers.

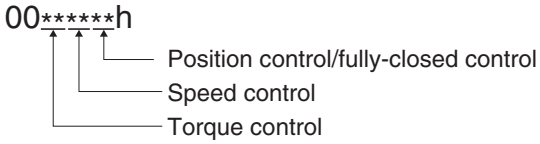

Example:
Position control or fully-closed control: Speed conformity output (08h)
Speed control: Motor rotation speed detection output (05h)
Torque control: Zero speed detection signal (07h)

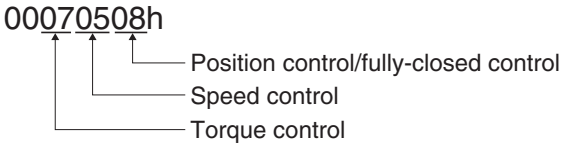

This will be 460040 since the front panel display is in decimal numbers.

Function Number Table

The set values to be used for allocations are as follows:

Signal name	Symbol	Set value
Disabled	–	00h
Servo ready completed output	READY	02h
Brake interlock output	BKIR	03h
Positioning completion output	INP	04h
Motor rotation speed detection output	TGON	05h
Torque limiting signal	TLC	06h
Zero speed detection output	ZSP	07h
Speed conformity output	VCMP	08h
Warning output 1	WARN1	09h
Warning output 2	WARN2	0Ah
Position command status output	P-CMD	0Bh
Positioning completion output 2	INP2	0Ch
Output during speed limit	V-LIMIT	0Dh
Alarm attribute output	ALM-ATB	0Eh
Speed command status output	V-CMD	0Fh

Precautions for Correct Use

- Do not use any values other than the settings listed.
- You can allocate the same function to more than one output signal.
- You cannot change the output signal logic. When the function is disabled (OFF), signal input is open with COM–, and when the function is enabled (ON), signal input is shorted with COM–.

6-11 Forward and Reverse Drive Prohibition Functions

Outline of Operation

- When the forward drive prohibition input (POT) and the reverse drive prohibition input (NOT) are turned OFF, the motor will stop rotating.
- You can stop the motor from rotating beyond the device's operating range by connecting limit inputs.

Parameters Requiring Settings

Parameter number	Parameter name	Explanation	Reference
Pn400 to Pn409	Input Signal Selection 1 to 10	Set the input signal allocations and logic. In the default settings, the allocations are as follows. Pn400 (CN1 - pin 8): NOT (Logic contact NC) Pn401 (CN1 - pin 9): POT (Logic contact NC)	
Pn504	Drive Prohibition Input Selection	Set the operation to be performed upon forward and reverse drive prohibition input.	
Pn505	Stop Selection for Drive Prohibition Input	Set the deceleration and stop methods upon forward and reverse drive prohibition input.	

Input Signal Selection Function (Default setting: Pn400, Pn401)

In the default setting, the allocations are as follows.

Parameter number	Parameter name	Default setting			
		Set value	Position Control or fully-closed control	Speed control	Torque control
Pn400	Input Signal Selection 1	00828282	NOT (NC)	NOT (NC)	NOT (NC)
Pn401	Input Signal Selection 2	00818181	POT (NC)	POT (NC)	POT (NC)

- Refer to "6-10 Sequence I/O Signal" (P.6-36) for details on input signal selections 1 to 10.

Drive Prohibition Input Selection (Pn504)

Install limit switches at both ends of the axis to prohibit the Servomotor from driving in the direction specified by the switch. This can be used to prevent the workpiece from driving too far and thus prevent damage to the machine. Set the operation to be performed upon forward and reverse drive prohibition input.

Drive Prohibition Input Selection (Pn504)	Explanation
0	**Forward drive prohibition input and reverse drive prohibition input enabled.** The operation when a signal is input is as follows. Forward drive prohibition input closed: Forward limit switch not operating and status normal. Forward drive prohibition input open: Forward direction prohibited and reverse direction permitted. Reverse drive prohibition input closed: Reverse limit switch not operating and status normal. Reverse drive prohibition input open: Reverse direction prohibited and forward direction permitted. The Servomotor will decelerate and stop according to the sequence set in Stop Selection for Drive Prohibition Input (Pn505). For details, refer to explanation for Stop Selection for Drive Prohibition Input (Pn505). If the forward and the reverse prohibition inputs are both open, a drive prohibition input error 1 (Alarm 380) occurs because it is taken that Servo Drive is in error condition.
1	**Forward and reverse drive prohibition input disabled.**
2	**Forward and reverse drive prohibition input enabled.** If either the forward or the reverse prohibition input is open, a drive prohibition input error (Alarm 380) occurs.

Stop Selection for Drive Prohibition Input (Pn505)

Set the deceleration and stop methods upon a forward or reverse drive prohibition input.

Stop Selection for Drive Prohibition Input (Pn505)	Deceleration method	After stopping	Error counter
0	Dynamic brake	Torque command in drive-prohibited direction = 0	Held
1	Free-run (Torque command = 0 for drive prohibition direction)	Torque command in drive-prohibited direction = 0	Held
2	Immediate stop	Servo lock	Clear before and after deceleration.

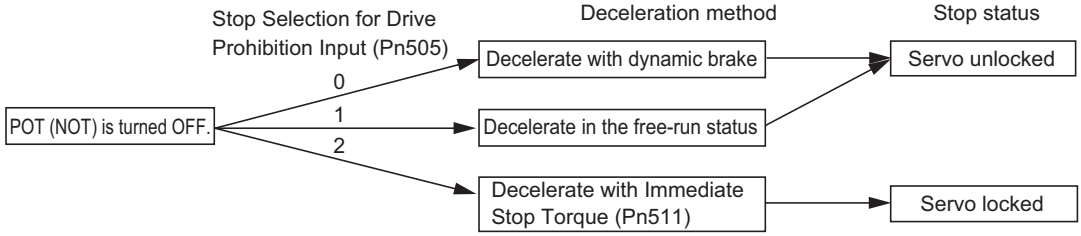

While the Forward Drive Prohibition Input (POT) is OFF, the Servomotor cannot be driven in the forward direction, but it can be driven in the reverse direction. Conversely, while the reverse drive prohibition input (NOT) is OFF, the Servomotor cannot be driven in the reverse direction, but it can be driven in the forward direction.

If immediate stop torque is set for deceleration and servo lock is set for stop (set value: 2), torque limit during deceleration will be limited with the set value of the Immediate Stop Torque (Pn511).

Precautions for Correct Use

- A load on the vertical axis and so forth may fall due to its own weight in the drive prohibition input state. To prevent the load from falling, set emergency stop torque for deceleration and servo lock for stop (set value: 2) in Stop Selection for Drive Prohibition Input (Pn505), or limit the operation using the Host Controller rather than using this function.
- Because an immediate stop will force the motor to decelerate quickly, the position error will momentarily be a large value during position control, and Alarm 24.0 "error counter overflow" or Alarm 34.0 "overrun limit error" may occur.In such a case, set the Position Counter Overflow Level (Pn014) and the Overrun Limit Setting (Pn514) to appropriate values.

6-12 Disturbance Observer Function

Outline of Operation

You can lower the effect of the disturbance torque and reduce vibration by using the estimated disturbance torque value.
You can use the disturbance observer in the following situations for position control or speed control.

- When servo is ON
- When there is no trouble with the motor's normal rotation
- When realtime autotuning function is disabled
- When instantaneous speed observer function is disabled

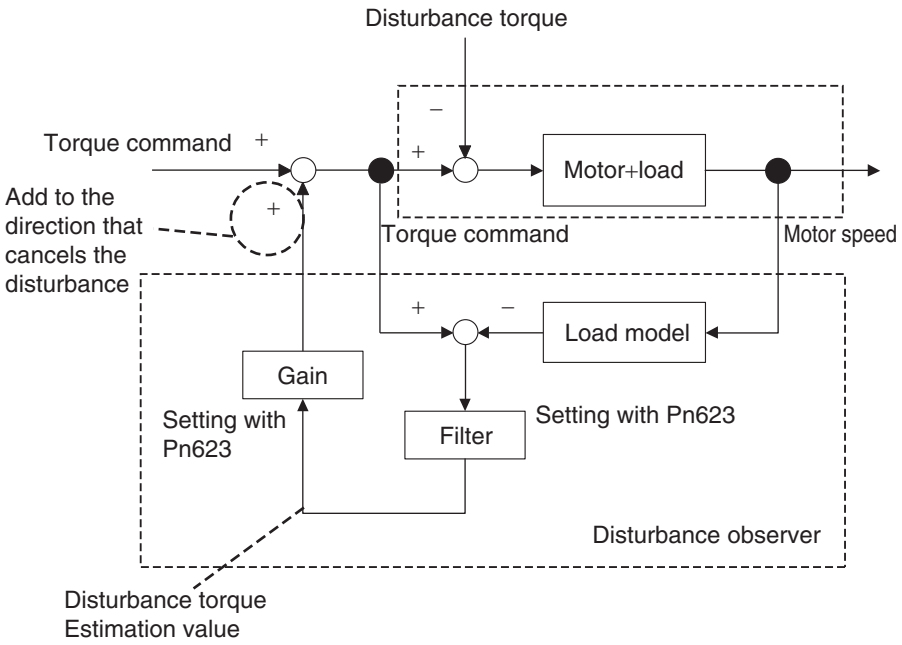

Precautions for Correct Use

- If there is a resonance point below the cut-off frequency estimated by the disturbance observer or if a large amount of high-frequency elements is found in the disturbance torque, the disturbance observer may not be effective.

Parameters Requiring Settings

Parameter number	Parameter name	Explanation	Reference
Pn610	Function Expansion Setting	Set the bits related to the disturbance observer.	P.8-60
Pn623	Disturbance Torque Compensation Gain	Set the compensation gain for the disturbance torque.	P.8-63
Pn624	Disturbance Observer Filter Setting	Set the filter time constant for disturbance torque compensation.	P.8-63

Operating Procedure

1. **Set the Function Expansion Setting (Pn610).**
   Set whether to enable or disable the disturbance observer in bit 1.
   0: Disabled
   1: Enabled
   Set the operating conditions to be enabled in bit 2.
   0: Enabled at all time
   1: Enabled only when gain 1 is selected
2. **Set the Disturbance Observer Filter Setting (Pn624).**
   Set Disturbance Torque Compensation Gain (Pn623) to a small value, and then change the value of Disturbance Observer Filter Setting (Pn624) from a large value to a small value. And set to the set value in which the effectiveness of suppressing the impact of disturbance and the operating noise level are balanced.
3. **Set the Disturbance Torque Compensation Gain (Pn623).**
   Change the value of Disturbance Torque Compensation Gain (Pn623) from a small value to a large value. And set to the set value in which the effectiveness of suppressing the impact of disturbance and the operating noise level are balanced.

6-13 Friction Torque Compensation Function

Outline of Operation

As a function to reduce the effect of friction, you can set the unbalanced load compensation that always compensates the constantly working offset torque, and the dynamic friction compensation that changes its direction depending on the operating direction.
You can use the function under the following conditions:

- When Servo is ON
- When there is no trouble with the motor's normal rotation

Parameters Requiring Settings

Parameter number	Parameter name	Explanation	Reference
Pn607	Torque Command Value Offset	Set the unbalanced load compensation value that is always added to the torque command in the control mode other than torque control.	P.8-60
Pn608	Forward Direction Torque Offset	Set the dynamic friction compensation value that is added to the torque command when a forward direction position command is input for position control or fully-closed control.	P.8-60
Pn609	Reverse Direction Torque Offset	Set the dynamic friction compensation value that is added to the torque command when a reverse direction position command is input for position control or fully-closed control.	P.8-60

Operation Example

Torque Command Value Offset (Pn607) reduces the variations of positioning operations due to the movement directions when a certain amount of unbalanced load torque is always applied to the motor at the vertical axis and so forth if that torque command value is set.
Forward Direction Torque Offset (Pn608) and Reverse Direction Torque Offset (Pn609) are used with loads that require a large amount of dynamic friction torque due to the radial load, such as the belt drive axis. By setting the friction torque for each rotation direction for all parameters, you can reduce the deterioration and inconsistencies of positioning stabilization time due to dynamic friction.

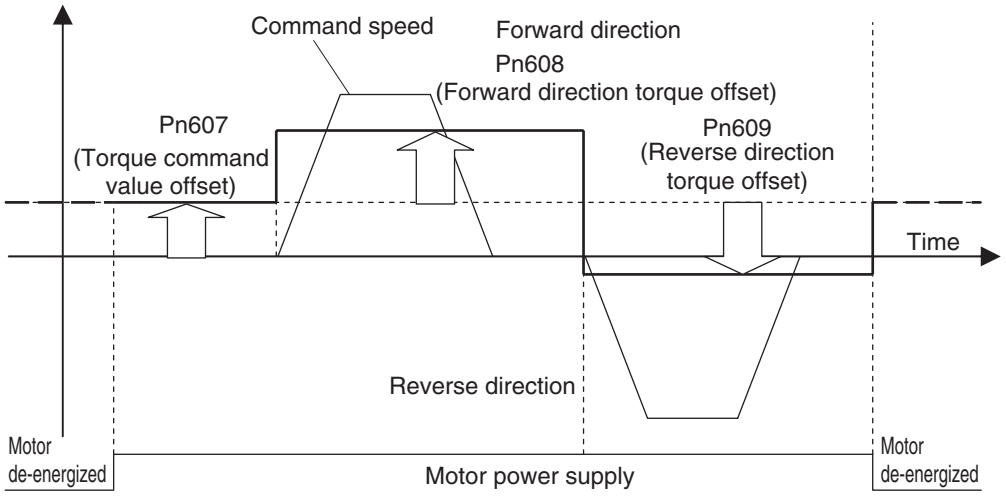

Precautions for Correct Use

You can use the unbalanced load compensation and the dynamic friction compensation together or separately. Take note that the following use limit is applied upon control mode switching or servo ON.

- During torque control
  The unbalanced load compensation and the dynamic friction compensation are 0 regardless of the parameter setting.
- When servo is OFF during speed control
  The load compensation is enabled based on Pn607 when the servo is turned OFF. The dynamic friction compensation will be 0 regardless of the parameter setting.
- When the servo is turned ON during position control or fully-closed control
  The unbalanced load compensation and the dynamic friction compensation values are held until the first position command is input. When the position command is input, the unbalanced load compensation will be updated based on Pn607. Also, based on the command direction, the dynamic friction compensation value will be updated according to parameters Pn608 or Pn609.

6-14 Inertia Ratio Switching Function

Outline of Operation

You can switch the inertia ratio from 1 or 2 using inertia ratio switching input (JSEL). This functions effectively if used when the load inertia changes in 2 levels.
You can use inertia ratio switching in the following situations.

- When Servo is ON
- When there is no trouble with the motor's normal rotation
- When realtime autotuning is disabled
- When adaptive filter function is disabled
- When instantaneous speed observer function is disabled
- When disturbance observer function is disabled

Parameters Requiring Settings

Parameter number	Parameter name	Explanation	Reference
Pn610	Function Expansion Setting	Set the bits related to inertia ratio switching.	P.8-60
Pn004	Inertia Ratio	Set the inertia ratio 1.	P.8-3
Pn613	Inertia Ratio 2	Set the inertia ratio 2.	P.8-61

Operating Procedure

1. **Set the Function Expansion Setting (Pn610).**
   Set whether to enable or disable inertia ratio switching in bit 3.
   0: Disabled
   1: Enabled
2. **Set the Inertia Ratio 1 (Pn004).**
3. **Set the Inertia Ratio 2 (Pn613).**
4. **Set the inertia ratio switching input (JSEL).**

Function Expansion Setting (Pn610)	Inertia ratio switching input (JSEL)	Applicable inertia ratio
When bit 3 = 0: Inertia ratio switching is disabled	OFF	Inertia Ratio 1 (Pn004)
	ON	
When bit 3 = 1: Inertia ratio switching is enabled	OFF	
	ON	Inertia Ratio 2 (Pn613)

Precautions for Correct Use

- Be sure that the motor is stopped when using the inertia ratio switching function.
- If the difference between inertia ratio 1 and inertia ratio 2 is large, a vibration may occur even if the motor is stopped. Use it upon confirming that there is no problem with vibration on the actual machine.

6-15 Hybrid Vibration Suppression Function

Outline of Operation

This function suppresses the vibration that is caused by the amount of the torsion between the motor and the load in the Fully-closed Control Mode. You can use this function to raise the gain setting.
The hybrid vibration suppression function can be used in the following situations.

- Fully-closed Control Mode
- When Servo is ON
- When there is no trouble with the motor's normal rotation

Parameters Requiring Settings

Parameter number	Parameter name	Explanation	Reference
Pn634	Hybrid Vibration Suppression Gain	Set the hybrid vibration suppression gain. In general, set it to the same value as the position loop gain, and finely adjust it based on the situation.	P.8-65
Pn635	Hybrid Vibration Suppression Filter	Set the hybrid vibration suppression filter.	P.8-66

Operating Procedure

1. **Set the Hybrid Vibration Suppression Gain (Pn634) to the same value as the position loop gain.**
2. **Gradually increase the set value of the Hybrid Vibration Suppression Filter (Pn635) while driving with fully-closed control and check the changes in the response.**
   If the response improves, find the combination of Pn634 and Pn635 that result in the optimal response by adjusting them.

Precautions for Correct Use

- This function is effective when the amount of torsion between the motor shaft and the load is large. It may be less effective when the amount of torsion is small.

6-16 Feed-forward Function

Outline of Operation

The feed-forward function come in 2 types: speed feed-forward and torque feed-forward.
The speed feed forward can minimize the position error and increase the responsiveness by calculating the speed control command that is required for the operation based on the internal positioning command during position or fully-closed control, and adding it to the speed command that is calculated based on the comparison with the position feedback.
The torque feed forward can increase the responsiveness during speed control by calculating the torque command that is required for the operation based on the speed control command, and adding it to the torque command that is calculated based on the comparison with the speed feedback.

Parameters Requiring Settings

Parameter number	Parameter name	Explanation	Reference
Pn110	Speed Feed-forward Amount	Use this parameter to add the speed control command calculated from the internal positioning command that is multiplied by this parameter's ratio to the speed command from the position control process.	P.8-12
Pn111	Speed Feed-forward Command Filter	Set the time constant for the first-order lag filter that is applied to speed feed-forward input.	P.8-12
Pn112	Torque Feed-forward Amount	Use this parameter to add the torque command calculated from the speed control command that is multiplied by this parameter's ratio to the torque command from the speed control process.	P.8-12
Pn113	Torque Feed-forward Command Filter	Set the time constant for the first-order lag filter that is applied to torque feed-forward input.	P.8-12
Pn600	Analog Torque Feed-forward Gain Setting	Set the input gain for analog torque feed forward. 0 to 9 will be disabled.	P.8-60
Pn610	Function Expansion Setting	Set the bits related to inertia ratio switching.	P.8-60

Operating Procedure

Speed Feed-forward Operating Method

1. **Set the Speed Feed-forward Command Filter (Pn111).**
   Set it to approx. 50 (0.5 ms).
2. **Adjust the Speed Feed-forward Amount (Pn110).**
   Gradually increase the value of Speed Feed-forward Amount (Pn110) and finely adjust it to avoid overshooting during acceleration/deceleration.
   If the speed feed-forward amount is set to 100%, the position error will be 0 in calculation. However, a large overshooting will occur during acceleration/deceleration.

   The position error during an operation at a constant speed will decrease based on the following formula according to the speed feed-forward gain value.

Position error [command unit] = command speed [command unit/s] / position loop gain [1/s] × (100 - speed feed-forward amount [%]) / 100

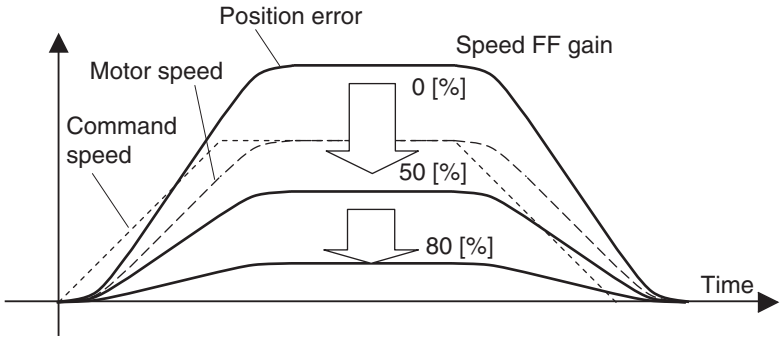

The position error in the range of constant speed becomes smaller as the speed feed-forward gain increases.

Precautions for Correct Use

- The operating noise may increase when the speed feed forward is enabled if the update cycle of the position command input is longer than the amplifier control cycle, or if the pulse frequency is not uniform. Apply the position command filter (first-order lag or FIR smoothing) or increase the speed feed-forward filter setting.

Torque Feed-forward Operating Method

1. **Set the Inertia Ratio (Pn004).**
   Set the inertia ratio as correctly as possible.
   - If the inertia ratio is calculated for the selected motor, input the calculated value.
   - If the inertia ratio is not known, perform autotuning and set the inertia ratio.
2. **Set the Torque Feed-forward Command Filter (Pn113).**
   Set it to approx. 50 (0.5 ms).
3. **Adjust the Torque Feed-forward Amount (Pn112).**
   Gradually increase the value of Torque Feed-forward Amount (Pn112).
   Since the position error during acceleration/deceleration at a certain speed can be brought close to 0, it can be controlled almost to 0 throughout the entire operation range during a trapezoidal speed pattern under ideal conditions where no disturbance torque is working.
   In reality, disturbance torque is always present and, therefore, the position error cannot be completely 0.

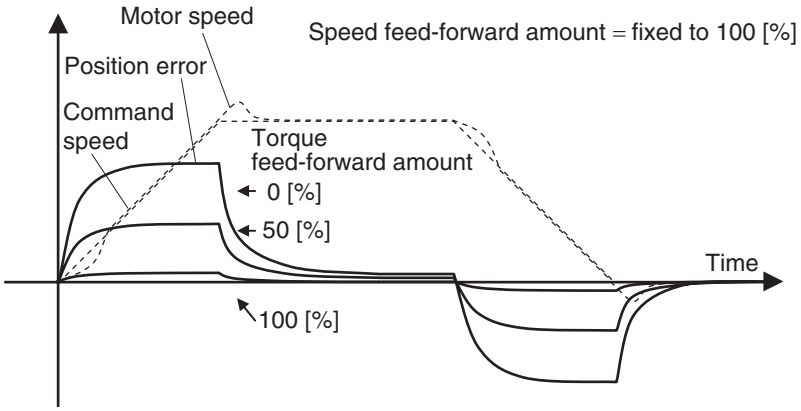

Torque feed-forward can reduce the position error in a range of constant acceleration/deceleration.

- When operating in position control, this function normally is used together with the speed feedforward.

Precautions for Correct Use

- If you increase the torque feed-forward filter time constant, the operation noise will be reduced. However, the position error where the acceleration changes will become larger.

Application Example of Analog Torque Feed Forward

The analog torque feed forward is enabled when bit 5 of the Function Expansion Setting (Pn610) is set to 1. In addition, if analog input 3 is used by another function (for example, analog torque limit), this function is disabled.
It is converted to torque from the voltage [V] that is applied to analog input 3 based on the Analog Torque Feed-forward Gain Setting (Pn600) and is added to the torque command [%].
The conversion from the input voltage [V] to analog input 3 to a torque command [%] to the motor is performed as illustrated in the graph below. The slope of the graph is when Pn600 = 30.The slope changes based on the Pn600 set value.

Torque command [%] = 100 × Input voltage [V] / (Pn600 set value × 0.1)

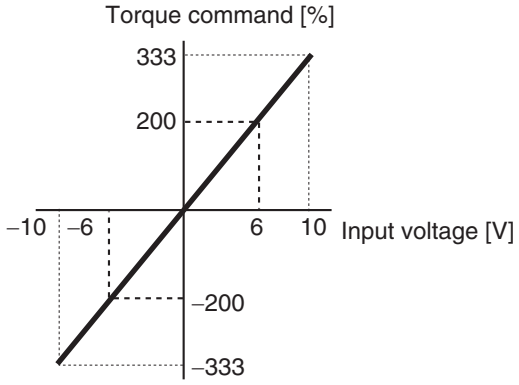

6-17 Instantaneous Speed Observer Function

Outline of Operation

Estimating the motor speed using a load inertia increases responsiveness and reduces vibration at stopping and improves the speed detection accuracy. This function can be used for position control.
The instantaneous speed observer function can be used in the following situations.

- When Servo is ON
- When there is no trouble with the motor's normal rotation
- When realtime autotuning is disabled

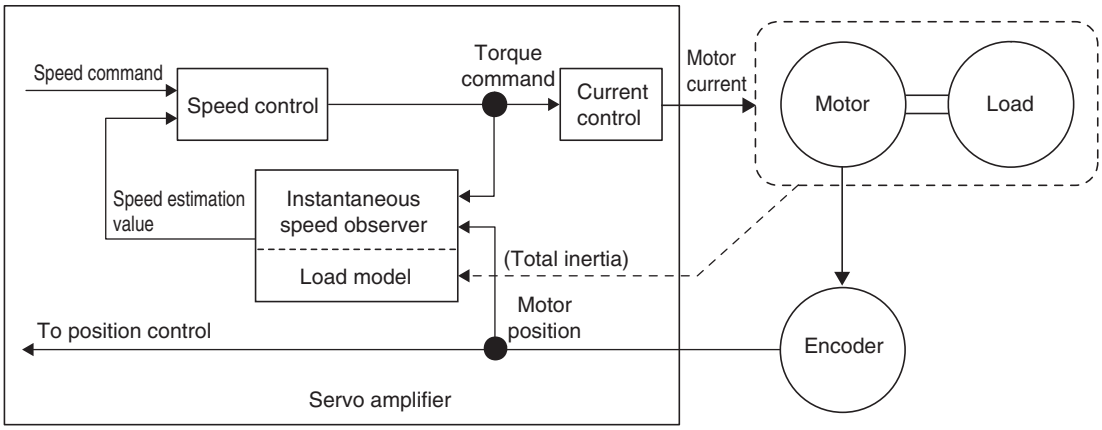

Parameters Requiring Settings

Parameter number	Parameter name	Explanation	Reference
Pn610	Function Expansion Setting	Set whether to enable or disable the instantaneous observer function.	P.8-60
Pn004	Inertia Ratio	Set the inertia ratio 1.	P.8-3
Pn100	Position Loop Gain	Set the position loop gain.	P.8-9
Pn101	Speed Loop Gain	Set the speed loop gain.	P.8-10
Pn103	Speed Feedback FIlter Time Constant	Set six filter time constants.	P.8-11
Pn108	Speed Feedback FIlter Time Constant 2	Set six filter time constants.	P.8-11

Operating Procedure

1. **Set the Inertia Ratio (Pn004).**
   Set the inertia ratio as correctly as possible.
   - If the Inertia Ratio (Pn004) is requested in a realtime auto gain tuning, use the set value.
   - If the inertia ratio is calculated for the selected motor, input the calculated value.
   - If the inertia ratio is not known, perform autotuning and set the inertia ratio.
2. **Adjust the position loop gain and speed loop gain.**
   Adjust Position Loop Gain (Pn100), Speed Loop Gain (Pn101), Speed Loop Integral Time Constant (Pn102) and Torque Command Filter Time Constant (Pn104).
   If no problem occurs in realtime autotuning, you can continue to use the settings.
3. **Set the Function Expansion Setting (Pn610).**
   Set whether to enable or disable the instantaneous speed observer function in bit 0.
   0: Disabled
   1: Enabled
   If you set this to 1 (enabled), the speed detection method will switch to instantaneous speed observer.
   - If the machine operation noise or vibration, or a change in the torque monitor waveform is significant enough to cause any problem, return the setting to 0 and make sure that the inertia ratio or the adjustment parameters are correct.
   - If the machine operation noise or vibration, or a change in the torque monitor waveform is small, make small adjustments to the Inertia Ratio (Pn004) to find the setting that makes the smallest change while monitoring the position error waveform and the actual speed waveform.
   - If Position Loop Gain (Pn100), Speed Loop Gain (Pn101) or Speed Loop Integral Time Constant (Pn102) is changed, the optimal value for the Inertia Ratio (Pn004) may have changed, so make small adjustments on the value for the Inertia Ratio (Pn004) again to set a value that makes the smallest change.

Precautions for Correct Use

- This function may not function properly or the effect may not be apparent under the following conditions.
  - If the margin of error with the actual device is large for the inertia load
  - If there are multiple resonance points
  - If there is a large resonance point at a frequency of 300 Hz or lower
  - If there is a non-linear element (play), such as a large backlash
  - If the load inertia changes
  - If there is a large disturbance torque with high-frequency elements is applied
  - If the setting range for positioning is small

7

Safety Function

This function stops the Servomotor based on a signal from a safety controller or safety sensor.
An outline of the function is given together with operation and connection examples.

7-1 Safe Torque OFF (STO) Function 7-1
Outline of Operation 7-1
I/O Signal Specifications 7-2
7-2 Operation Example 7-4
7-3 Connection Example 7-6

7-1 Safe Torque OFF (STO) Function

Outline of Operation

The safe torque OFF (hereinafter referred to as STO according to IEC61800-5-2) function is used to cut off the motor current and stop the motor through the input signals from a safety equipment, such as a Safety Controller or safety sensor, that is connected to the safety connector (CN8).
When the STO function is operating, the Servo Drive turns OFF the servo ready completed output (READY) to go into the safety status.

- The PFH value is 2.30×10^{-8}.

Precautions for Safe Use

- When using the STO function, be sure to execute a risk assessment of the equipment to confirm that the system safety requirements are met.
- There are the following risks even when the STO function is operating. Be sure to take safety into account as part of the risk assessment.
  - The motor runs if an external force is present (e.g., force of gravity on a vertical axis). If holding is required, implement appropriate measures, such as providing external brakes. The brakes for a Servo Drive with brakes are used for the holding purpose only, and cannot be used for control.
  - Even if there is no external force, when Stop Selection for Alarm Detection (Pn510) is set to free-run (with the dynamic brake disabled), the motor operates as free-run and the stop distance is long.
  - The motor may operate in the range of up to 180 degrees of electrical angle due to a power transistor trouble and so forth.
  - The power supply to the motor is cut off by the STO function, but the power supply to the Servo Drive will not be cut off nor electrically isolated. For Servo Drive maintenance, cut off the power supply to the Servo Drive through another means.
- The EDM output signal is not a safety output. Do not use the EDM output for any purpose other than the failure monitoring function.
- The dynamic brake and external brake release signal outputs are not safety-related parts. Make sure to design the equipment so that it is not dangerous even if the external brake release fails during the STO status.
- When using the STO function, connect equipment that meets the safety standards.
- Following certifications are fulfilled:
  - CAT-3 (EN 954-1)
  - Performance level d (EN/ISO 13849-1)
  - SIL 2 (IEC/EN 62061)

I/O Signal Specifications

Safety Input Signal

There are 2 safety input circuits to operate the STO function.

Signal name	Symbol	Pin number	Description	Control mode			
				Position	Speed	Torque	Fully-closed
Safety input 1	SF+	CN8-4	• The upper arm drive signal of the power transistor inside the Servo Drive is cut off.	√	√	√	√
	SF–	CN8-3		√	√	√	√
Safety input 2	SF2+	CN8-6	• The lower arm drive signal of the power transistor inside the Servo Drive is cut off.	√	√	√	√
	SF2–	CN8-5		√	√	√	√

- When safety input 1 or 2 turns OFF, the STO function will start operating within 5 ms of the input, and the motor output torque will be reduced to 0.
- Connect the equipment so that the safety input circuit is turned OFF to operate the STO function.
- Use Stop Selection for Alarm Detection (Pn510) to set the operation when the safety input is turned OFF.

Precautions for Correct Use

- L-pulses for self-diagnosis of safety equipment

  When you are connecting a safety device, such as a safety controller or a safety sensor, the safety output signal of the device may include L pulses for self-diagnosis. To avoid malfunction due to the L pulses for self-diagnosis, a filter that removes the L pulses is built into the safety input circuit. If the OFF time of the safety input signal is 1 ms or less, the safety input circuit does not recognize it as OFF. To make sure that OFF is recognized, maintain the OFF status of safety input signal for at least 5 ms.

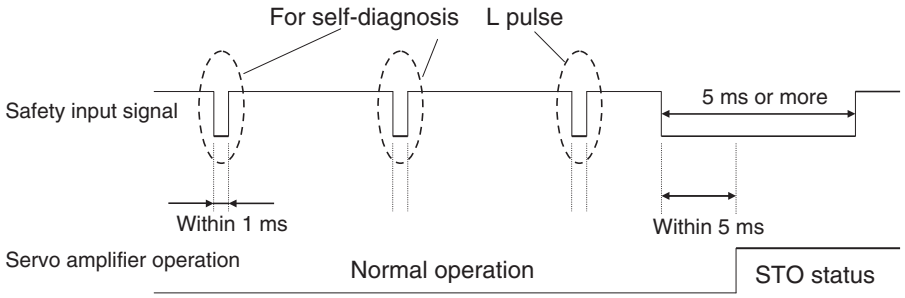

External Device Monitor (EDM) Output Signal

This is a monitor output signal that is used to monitor the status of safety input signals using an external device.
Connect a safety device, such as a safety controller or a safety sensor. Connect the EDM output signal to the monitoring terminal on a safety device.

Signal name	Symbol	Pin number	Description	Control mode			
				Position	Speed	Torque	Fully-closed
EDM output	EDM+	CN8-8	• A monitor signal is output to detect a safety function failure. * This is not a safety output.	√	√	√	√
	EDM–	CN8-7		√	√	√	√

Relationship Between Safety Input Signals and EDM Output Signal

Normally when both safety inputs 1 and 2 are OFF, i.e., when the STO function is activated for both safety input circuits, the EDM output is ON.
You can detect a failure of the safety input circuit and the EDM output circuit by monitoring all of the following 4 signal states using an external device.
Errors occur in the following two cases:

- Both safety inputs 1 and 2 are OFF, but the EDM output circuit signal does not turn ON.
- Either or both safety inputs 1 and 2 are ON, but the EDM output circuit signal is ON.

Signal name	Symbol	Signal status			
Safety input 1	SF1	ON	ON	OFF	OFF
Safety input 2	SF2	ON	OFF	ON	OFF
EDM output	EDM	OFF	OFF	OFF	ON

- The maximum delay time is 6 ms after the safety input signal is input until the EDM output signal is output.

7-2 Operation Example

Operation Timings to a Safety Status

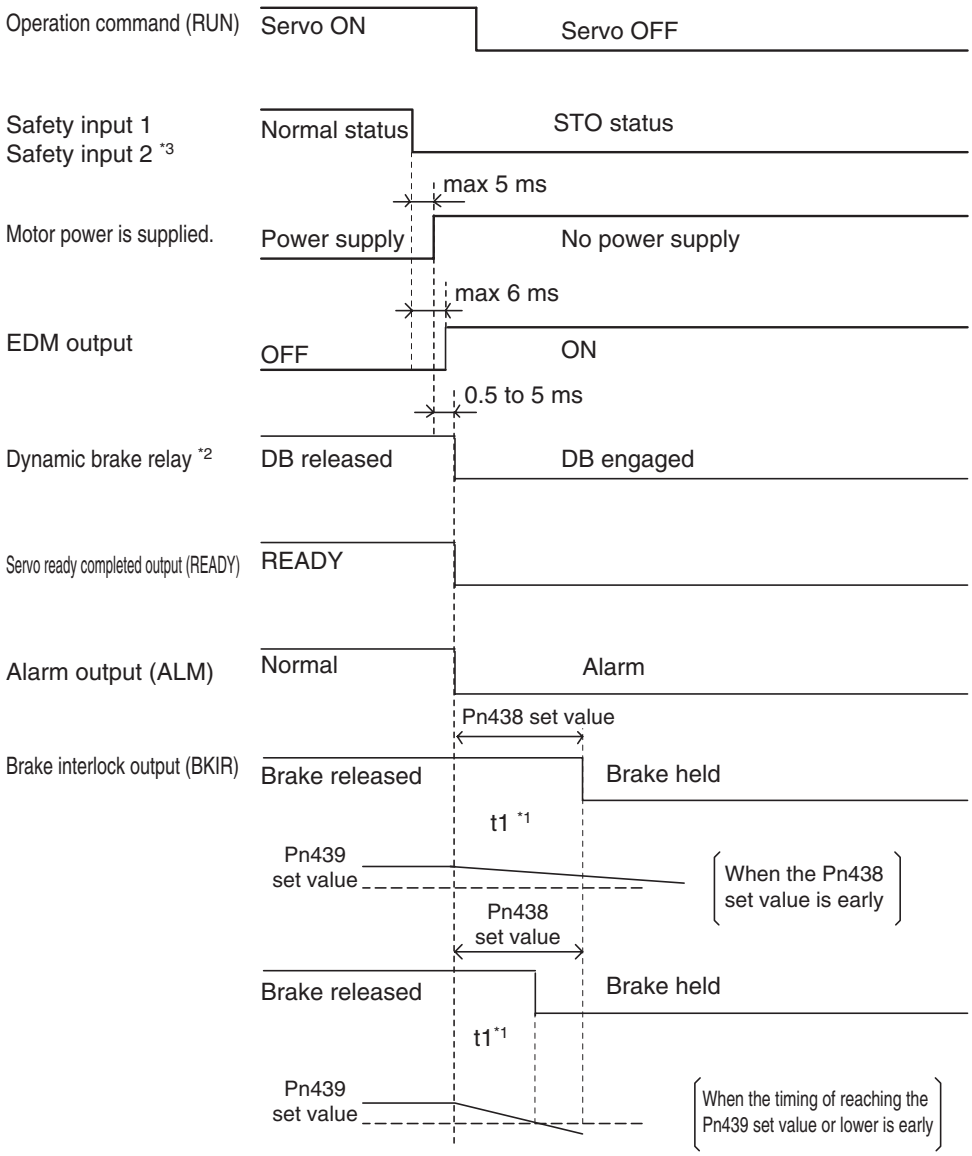

*1. t1 is the set value of the Brake Timing during Operation (Pn438), or the time needed for the motor rotation speed to drop to or below the Brake Release Speed Setting (Pn439), whichever occurs first.

*2. The dynamic brake is based on the Stop Selection for Alarm Detection (Pn510) setting.

*3. STO status is entered when either safety input 1 or 2 turns OFF.

Timing of Return from the Safety Status

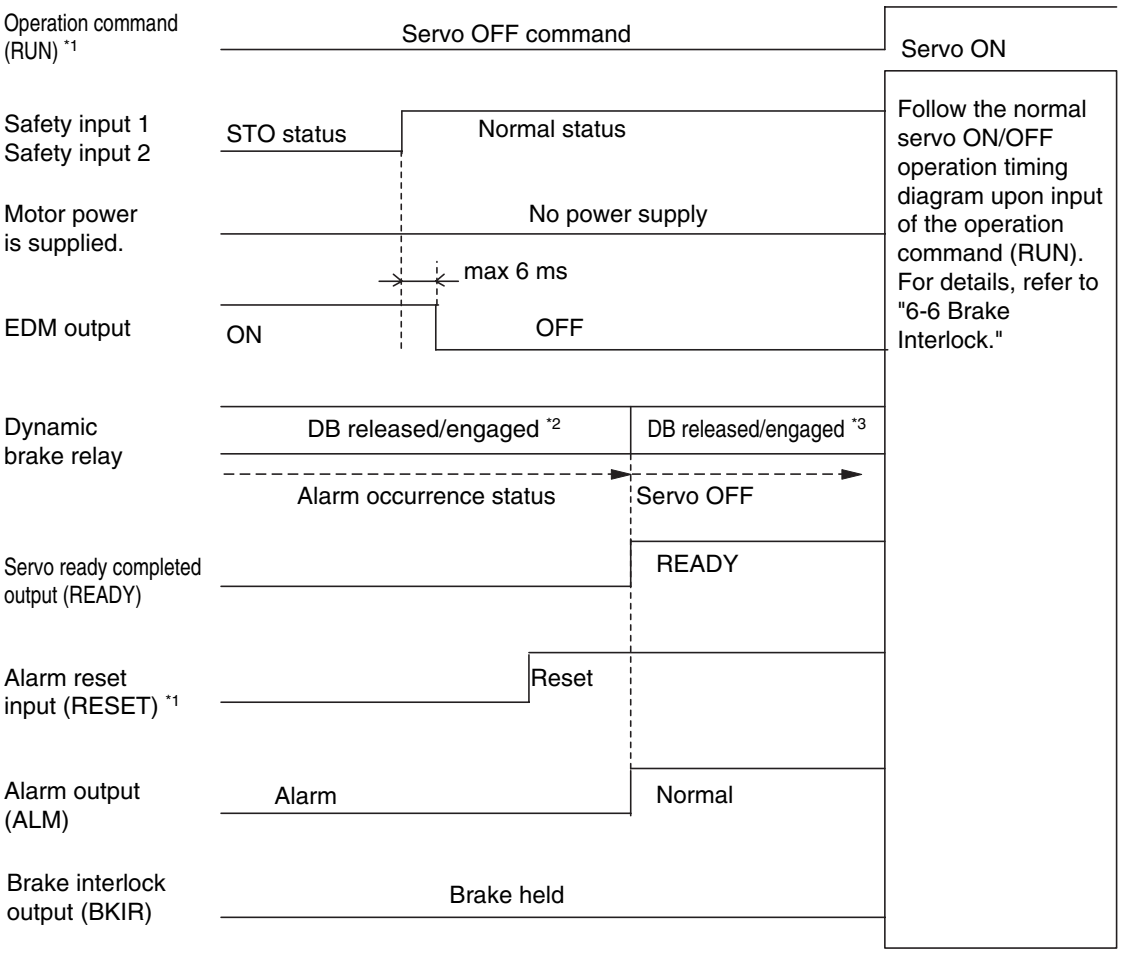

*1. Make sure that servo ON input is turned OFF when you return the input signals of safety inputs 1 and 2 to ON. Alarm clear must be performed because alarms will occur. Be sure to execute the alarm clear when both safety inputs 1 and 2 are returned to the ON status. An alarm will occur immediately if the alarm reset is executed when even one of these is still in the OFF status.

*2. Since this is a status where alarms will occur, the dynamic brake is based on the Stop Selection for Alarm Detection (Pn510).

*3. Since this is a normal servo OFF status, the dynamic brake is based on the Stop Selection with Servo OFF (Pn506) setting.

7-3 Connection Example

Connection with a Safety Controller (2 safety input and EDM output)

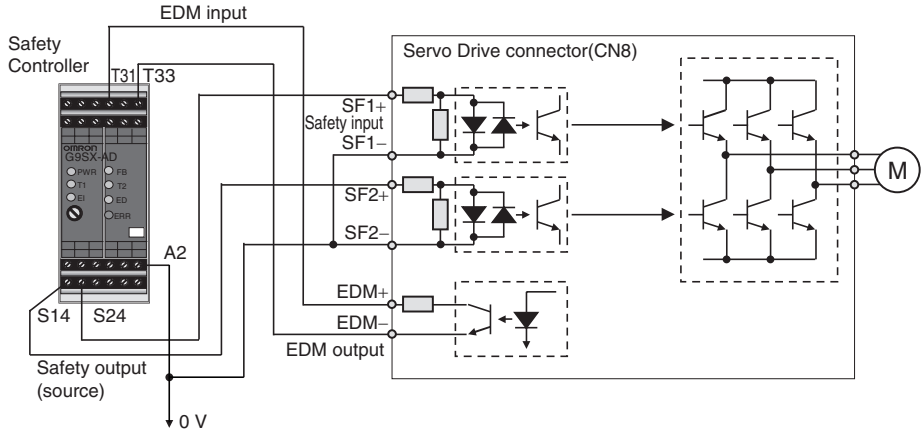

8

Parameter Details

This chapter explains the set value and contents of setting of each parameter.

8-1 Basic Parameters....8-1
8-2 Gain Parameters....8-9
8-3 Vibration Suppression Parameters....8-20
8-4 Analog Control Parameters....8-25
8-5 Interface Monitor Setting Parameters....8-36
8-6 Extended Parameters....8-47
8-7 Special Parameters....8-60

8-1 Basic Parameters

Pn000	Rotation Direction Switching						All
Setting range	0 or 1	Unit	–	Default setting	1	Power OFF and ON	Yes

Explanation of Set Values

Set value	Description
0	Forward direction command sets the motor rotation direction to CW.
1	Forward direction command sets the motor rotation direction to CCW.

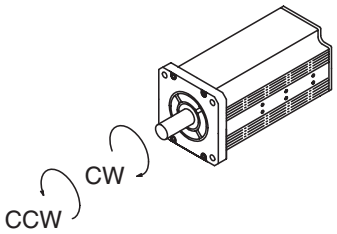

- Regarding the motor rotation direction, when seen from load-side axis, clockwise is referred to as CW and counterclockwise as CCW.
  The following table shows the motor rotation direction for the commands.

Pn000	Pn006	Pn301 or Pn318	Command	Motor rotation direction
0	0	–	CCW pulse	CCW: Forward
	0	–	CW pulse	CW: Reverse
	1	–	CCW pulse	CW: Reverse
	1	–	CW pulse	CCW: Forward
	–	0	+ voltage	CCW: Forward
	–	0	– voltage	CW: Reverse
	–	1	+ voltage	CW: Reverse
	–	1	– voltage	CCW: Forward
1	0	–	CCW pulse	CW: Reverse
	0	–	CW pulse	CCW: Forward
	1	–	CCW pulse	CCW: Forward
	1	–	CW pulse	CW: Reverse
	–	0	+ voltage	CW: Reverse
	–	0	– voltage	CCW: Forward
	–	1	+ voltage	CCW: Forward
	–	1	– voltage	CW: Reverse

Pn001	Control Mode Selection						All
Setting range	0 to 6	Unit	–	Default setting	0	Power OFF and ON	Yes

Explanation of Set Values

Set value	Description
0	Position control (pulse train command)
1	Speed control (analog command)
2	Torque control (analog command)
3	Mode 1: Position control, Mode 2: Speed control
4	Mode 1: Position control, Mode 2: Torque control
5	Mode 1: Speed control, Mode 2: Torque control
6	Fully-closed control

- Set the control mode to be used.
- If a composite mode is set (set values: 3 to 5), mode 1 or mode 2 can be selected using the control mode switching input (TVSEL).
  - When the control mode switching input is open: Select mode 1.
  - When the control mode switching input is short-circuited: Select mode 2.
- Do not input a command within 10 ms before or after switching.

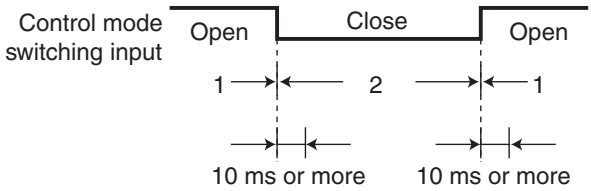

Pn002	Realtime Autotuning Mode Selection						All
Setting range	0 to 6	Unit	–	Default setting	1	Power OFF and ON	–

Explanation of Set Values

Set value	Description
0	Disabled
1	This mode focuses on stability.
2	This mode focuses on positioning.
3	Used when an unbalanced load is present such as a vertical axis.
4	Used when friction is large (unbalanced load also calculated).
5	Used only for estimating load characteristics.
6	Used when customizing Realtime Autotuning Mode.

- Refer to "10-2 Realtime Autotuning" (P.10-3) for details on the settings

Pn003	Realtime Autotuning Machine Rigidity Setting						All
Setting range	0 to 31	Unit	–	Default setting	13 *	Power OFF and ON	–

- Default settings:
  * Pn003 = 11 - For 200V drives of 1 kW or upper and 400V drives
- Set the machine rigidity to one of 32 levels when realtime autotuning is enabled.

Low ←Machine rigidity→ High
Low ←Servo gain→ High

Pn003	0.1 - - - - - - - - - - - - - - - 31

Low ←Responsiveness→ High

- If the set value is changed suddenly by a large amount, the gain may change rapidly, subjecting the machine to shock. Always start with a small setting, and gradually increase the setting while monitoring machine operation.

Pn004	Inertia Ratio					All	
Setting range	0 to 10,000	Unit	%	Default setting	250	Power OFF and ON	–

- Set the load inertia as a percentage of the motor rotor inertia.
- Pn004 = (Load inertia / Rotor inertia) × 100%
- When realtime autotuning is enabled, the inertia ratio is continuously estimated and saved in EEPROM every 30 minutes.
- If the inertia ratio is set correctly, the setting unit for the Speed Loop Gain (Pn101) and Speed Loop Gain 2 (Pn106) is Hz.
- If the Inertia Ratio (Pn004) is set larger than the actual value, the setting for speed loop gain will increase. If the Inertia Ratio (Pn004) is set smaller than the actual value, the setting for speed loop gain will decrease.

Pn005	Command Pulse Input Selection					Position Fully-closed	
Setting range	0 or 1	Unit	–	Default setting	0	Power OFF and ON	Yes

Explanation of Set Values

Set value	Description
0	Photocoupler input (+PULS: CN1 pin 3, -PULS: CN1 pin 4, +SIGN: CN1 pin 5, -SIGN: CN1 pin 6)
1	Input for line driver only (+CWLD: CN1 pin 44, -CWLD: CN1 pin 45, +CCWLD: CN1 pin 46, -CCWLD: CN1 pin 47)

- Selects whether to use photocoupler or input for line driver only for the command pulse input.

Pn006	Command Pulse Rotation Direction Switching Selection					Position Fully-closed	
Setting range	0 or 1	Unit	–	Default setting	0	Power OFF and ON	Yes

Explanation of Set Values

Set value	Description
0	The motor rotates in the direction specified by the command pulse.
1	The motor rotates in the opposite direction from the direction specified by the command pulse.

- Set the motor rotation direction for the command pulse input.

Pn007	Command Pulse Mode Selection					Position Fully-closed	
Setting range	0 to 3	Unit	–	Default setting	1	Power OFF and ON	Yes

• Set the count method for the command pulse input.

Command Pulse Rotation Direction Switching Selection (Pn006)	Command Pulse Mode Setting (Pn007)	Command pulse mode	Motor forward command	Motor reverse command
0	0 or 2	90° phase difference (phases A and B) signal inputs	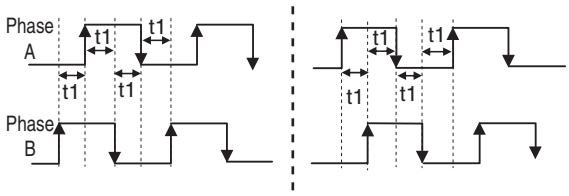 Line driver: t1 ≥ 2 μs Open collector: t1 ≥ 5 μs	
	1	Reverse pulse/ forward pulse	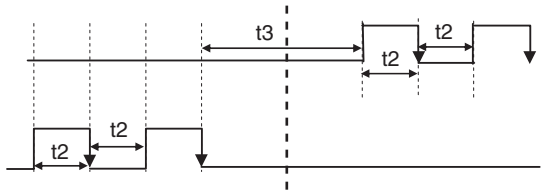 Line driver: t2 ≥ 1 μs Open collector: t2 ≥ 2.5 μs	
	3	Feed pulse/ direction signal	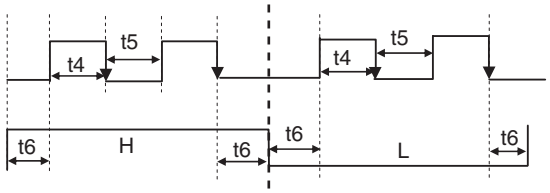 Line driver: t2 ≥ 1 μs Open collector: t2 ≥ 2.5 μs	

Command Pulse Rotation Direction Switching Selection (Pn006)	Command Pulse Mode Setting (Pn007)	Command pulse mode	Motor forward command	Motor reverse command
1	0 or 2	90° phase difference (phases A and B) signal inputs	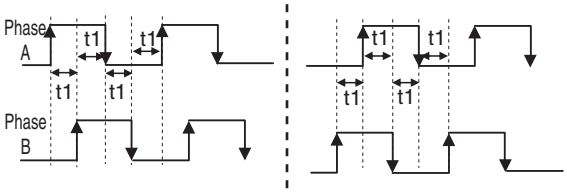 Line driver: t1 ≥ 2 μs Open collector: t1 ≥ 5 μs	
	1	Reverse pulse/ forward pulse	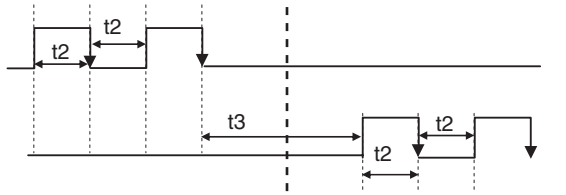 Line driver: t2 ≥ 1 μs Open collector: t2 ≥ 2.5 μs	
	3	Feed pulse/ direction signal	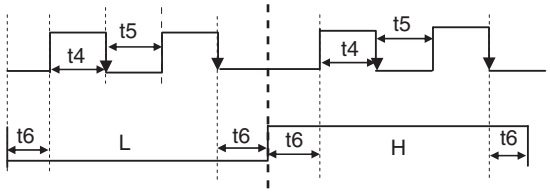 Line driver: t2 ≥ 1 μs Open collector: t2 ≥ 2.5 μs	

- Set the form of the pulse inputs sent as command to the drive from a Position Controller.
- Modes 0 and 2 are exactly the same.

Pn008	Electronic Gear Integer Setting					Position Fully-closed	
Setting range	0 to 2^{20}	Unit	pulse	Default setting	10000	Power OFF and ON	Yes

- Set the number of command pulses corresponding to 1 motor rotation.
- If the set value is 0, Electronic Gear Ratio Numerator 1 (Pn009) and Electronic Gear Ratio Denominator (Pn010) become valid.

Pn009	Electronic Gear Ratio Numerator 1					Position	
Setting range	0 to 2^{30}	Unit	–	Default setting	0	Power OFF and ON	–

Pn010	Electronic Gear Ratio Denominator					Position	
Setting range	1 to 2^{30}	Unit	–	Default setting	10000	Power OFF and ON	–

- Set the electronic gear function.
  - It is enabled when Pn008 is 0.
- The electronic gear can be used for the following:
  - To set the amount of motor rotation or travel distance per input command pulse.
  - To increase the nominal command pulse frequency by using a multiplier when the desired motor speed cannot be achieved due to the limited pulse generation capability of the host device (possible maximum output frequency).
- Electronic Gear Block Diagram:

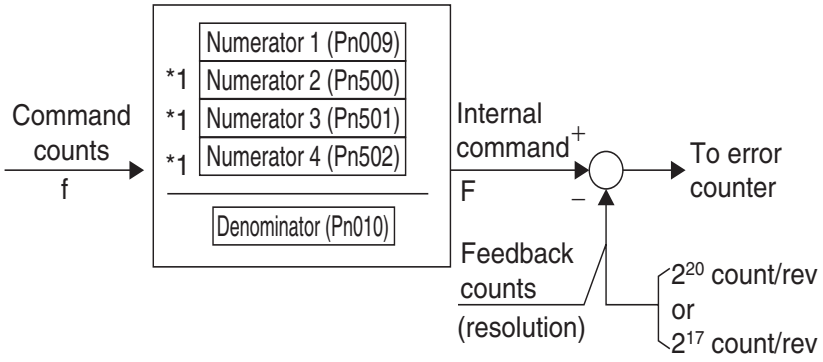

*1. Numerator 2 to 4 is selected using the electronic gear switching (GESEL1 and GESEL2).

GESEL1	GESEL2	Selected numerator
OFF	OFF	Electronic Gear Ratio Numerator 1
ON	OFF	Electronic Gear Ratio Numerator 2
OFF	ON	Electronic Gear Ratio Numerator 3
ON	ON	Electronic Gear Ratio Numerator 4

Refer to "6-4 Electronic Gear Function" (P.6-10) for information on the settings.

Pn011	Encoder Dividing Numerator					All	
Setting range	1 to 262,144	Unit	P/r	Default setting	2500	Power OFF and ON	Yes

- If Encoder Dividing Denominator (Pn503) = 0, the encoder resolution becomes the pulse output dividing denominator.
- Note that 1 pulse corresponds to 4 counts. Encoder resolution corresponds with counts.

$$\text{Encoder pulse} \rightarrow \frac{\text{Pn011} \times 4 \text{ (When the host side uses a 4 multiplier process)}}{\text{Encoder resolution}} \rightarrow \text{Output pulse}$$

Pn012	Encoder Output Direction Switching Selection					All	
Setting range	0 to 3	Unit	–	Default setting	0	Power OFF and ON	Yes

- Setting 2 & 3 are available only in fully-closed control

Explanation of Set Values

Set value	Phase B logic	Output source	Motor forward command	Motor reverse command
0	Non-reverse	Encoder	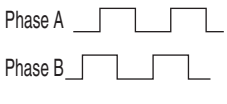	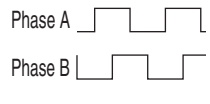
1	Reverse	Encoder	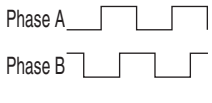	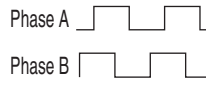
2	Non-reverse	External encoder	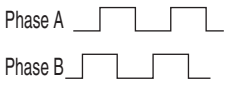	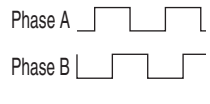
3	Reverse	External encoder	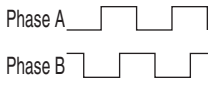	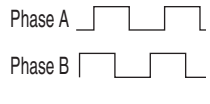

Pn013	No. 1 Torque Limit					All	
Setting range	0 to 500	Unit	%	Default setting	500	Power OFF and ON	–

- Set the No. 1 limit value for the output torque of the motor.

Pn014	Error Counter Overflow Level					Position Fully-closed	
Setting range	0 to 2^{27}	Unit	Command unit	Default setting	100000	Power OFF and ON	–

- Set the range of the error counter overflow level.

Pn015	Operation Switch when Using Absolute Encoder					Position Fully-closed	
Setting range	0 to 2	Unit	–	Default setting	1	Power OFF and ON	Yes

Explanation of Set Values

Set value	Description
0	Use as absolute encoder.
1	Use as incremental encoder.
2	Use as absolute encoder but ignore multi-rotation counter overflow.

- Set the operating method for the 17-bit absolute encoder.

Pn016	Regeneration Resistor Selection					All	
Setting range	0 to 3	Unit	–	Default setting	3 *	Power OFF and ON	Yes

* The default setting is 0 for 100-V Servo Drives of 400 W, 200-V Servo Drives of 750 W or higher, and 400-V Servo Drives.

Explanation of Set Values

Set value	Description
0	Regeneration Resistor used: Built-in Resistor The regeneration processing circuit operates and the regeneration overload (Alarm No. 18) will be enabled according to the Built-in Resistor (with approx. 1% duty).
1	Regeneration Resistor used: External Resistor The regeneration processing circuit operates, and regeneration overload (Alarm No. 18) will cause a trip when the operating rate of the Regeneration Resistor exceeds 10%.
2	Regeneration Resistor used: External Resistor The regeneration processing circuit operates, but regeneration overload (Alarm No. 18) will not occur.
3	Regeneration Resistor used: None The regeneration processing circuit and regeneration overload (Alarm No. 18) will not operate, and all regenerative energy will be processed by the built-in capacitor.

- Do not touch the External Regeneration Resistor. A burn injury may result.
- Always provide a temperature fuse or other protective measure when using an External Regeneration Resistor. Regardless of whether the regeneration overload error is enabled or disabled, the Regeneration Resistor can generate heat and may cause burning.
- Set this parameter depending on whether the Built-in Regeneration Resistor is used, or the Built-in Regeneration Resistor is disconnected and an External Regeneration Resistor is connected. (The External Regeneration Resistor connection terminal is connected.)
- To use the Built-in Regeneration Resistor, always set this parameter to 0.

Pn017	External Regeneration Resistor Setting					All	
Setting range	0 to 4	Unit	–	Default setting	0	Power OFF and ON	Yes

Explanation of Set Values

Set value	Description
0	Regeneration load ratio is 100% when operating rate of the External Regeneration Resistor is 10%.
1	Reserved
2	Reserved
3	Reserved
4	Reserved

8-2 Gain Parameters

Pn100	Position Loop Gain					Position Fully-closed	
Setting range	0 to 30,000	Unit	0.1/s	Default setting	480 *	Power OFF and ON	–

- The default setting is 320 for 200-V Servo Drives of 1 kW or higher, and 400-V Servo Drives.
- Adjust the position loop response to suit the machine rigidity.
- The responsiveness of the servo system is determined by the position loop gain. Servo systems with a high position loop gain have a high responsiveness and fast positioning. To increase the position loop gain, you must improve machine rigidity and increase the specific damping frequency. This should be 500 to 700 (0.1/s) for ordinary machine tools, 300 to 500 (0.1/s) for general-use and assembly machines, and 100 to 300 (0.1/s) for industrial robots. The default position loop gain is 400 (0.1/s), so be sure to lower the set value for machines with low machine rigidity.
- Increasing the position loop gain in systems with low machine rigidity or systems with low specific damping frequencies may cause machine resonance, resulting in an overload alarm.
- If the position loop gain is low, you can shorten the positioning time using feed-forward.
- This parameter is automatically changed by executing realtime autotuning function. To set it manually, set the Realtime Autotuning Mode Selection (Pn002) to 0.
  Position loop gain is generally expressed as follows:

$$\text{Position loop gain (Kp)} = \frac{\text{Command pulse frequency (pulses/s)}}{\text{Error counter accumulated pulse (pulse)}} \ (0.1/s)$$

Response when the position loop gain is operated

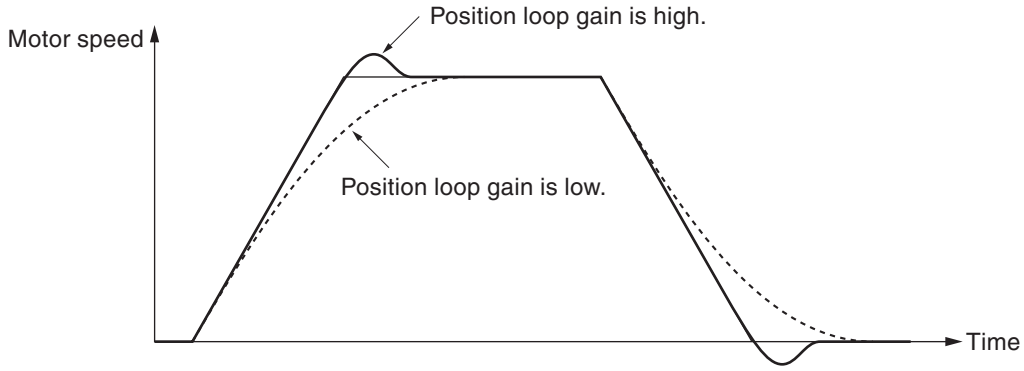

- If the speed loop gain and position loop gain are optimally set, the motor operation for the command will be delayed 2/Kp at acceleration and delayed 3/Kp at deceleration.

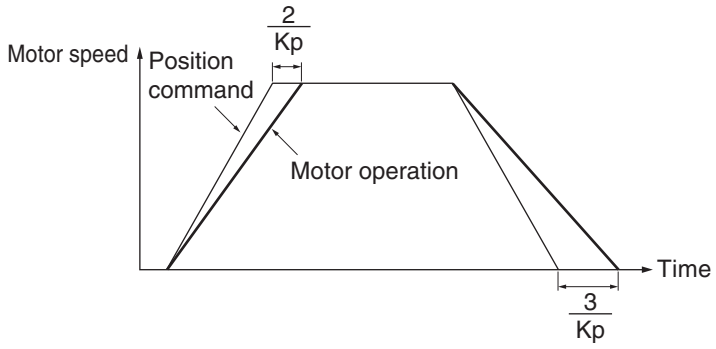

Pn101	Speed Loop Gain					All	
Setting range	1 to 32,767	Unit	0.1 Hz	Default setting	270 *	Power OFF and ON	–

- The default setting is 180 for 200-V Servo Drives of 1 kW or higher, and 400-V Servo Drives.
- Determine speed loop responsiveness.
- The setting for the speed loop gain must be increased to increase the position loop gain and improve the responsiveness of the entire servo system. Setting too high, however, may result in vibration.
- The setting unit for Pn101 will be Hz if the Inertia Ratio (Pn004) is set correctly.

When the speed loop gain is changed, the response is as shown in the following diagram.

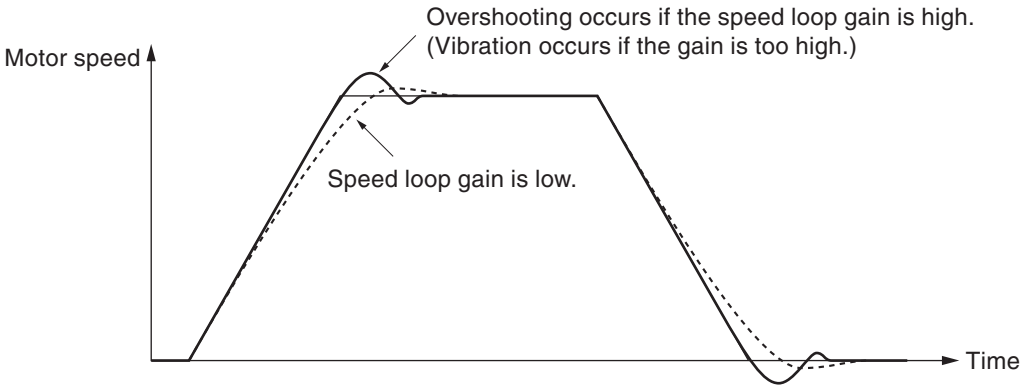

Pn102	Speed Loop Integral Time Constant					All	
Setting range	1 to 10,000	Unit	0.1 ms	Default setting	210 *	Power OFF and ON	–

- The default setting is 310 for 200-V Servo Drives of 1 kW or higher, and 400-V Servo Drives.
- Set the speed loop integral time constant.
- The smaller the set value, the faster the error approaches 0 when stopping. Set to 9,999 to maintain integration. Set to 10,000 to invalidate the effect of integration.

When the speed loop integral time constant is changed, the response is as shown in the following diagram.

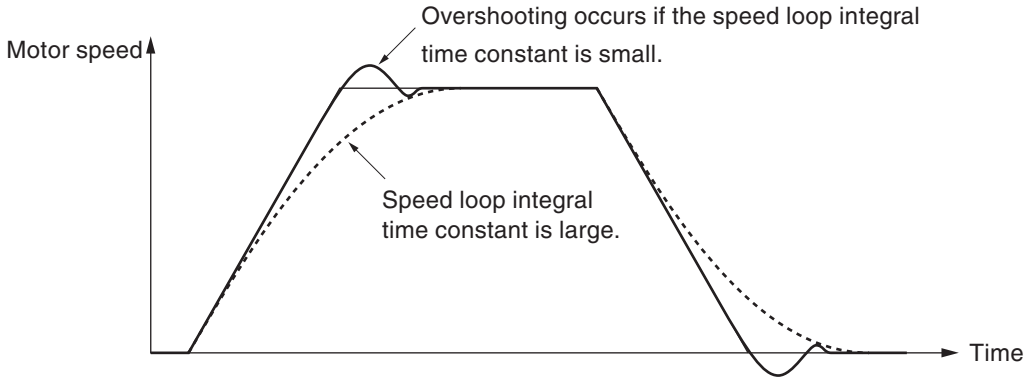

Pn103	Speed Feedback Filter Time Constant					All	
Setting range	0 to 5	Unit	–	Default setting	0	Power OFF and ON	–

- Set the time constant for the low pass filter (LPF) after speed detection to one of 6 levels (0 to 5).
- Increasing the set value increases the time constant and decreases the noise generated by the motor. Responsiveness, however, also decreases.
- Normally, use the default set value.

Pn104	Torque Command Filter Time Constant					All	
Setting range	0 to 2,500	Unit	0.01 ms	Default setting	84 *	Power OFF and ON	–

- The default setting is 126 for 200-V Servo Drives of 1 kW or higher, and 400-V Servo Drives.
- Set the time constant for the first-order lag filter inserted into the torque command.
- This parameter may be effective in suppressing vibration due to torsion resonance.

Pn105	Position Loop Gain 2					Position Fully-closed	
Setting range	1 to 30,000	Unit	0.1/s	Default setting	570 *	Power OFF and ON	–

- The default setting is 380 for 200-V Servo Drives of 1 kW or higher, and 400-V Servo Drives.
- Set the responsiveness of the position control system for the second position loop.

Pn106	Speed Loop Gain 2					All	
Setting range	1 to 32,767	Unit	0.1 Hz	Default setting	1*	Power OFF and ON	–

- The default setting is 180 for 200-V Servo Drives of 1 kW or higher, and 400-V Servo Drives.
- Set the responsiveness of the second speed loop.

Pn107	Speed Loop Integral Time Constant 2					All	
Setting range	1 to 10,000	Unit	0.1 ms	Default setting	10000	Power OFF and ON	–

- Set the second speed loop integral time constant.

Pn108	Speed Feedback Filter Time Constant 2					All	
Setting range	0 to 5	Unit	–	Default setting	0	Power OFF and ON	–

- Set the second speed feedback filter.

Pn109	Torque Command Filter Time Constant 2					All	
Setting range	0 to 2,500	Unit	0.01 ms	Default setting	84 *	Power OFF and ON	–

- The default setting is 126 for 200-V Servo Drives of 1 kW or higher, and 400-V Servo Drives.
- Set the second torque filter time constant.
- The parameters from Pn105 to Pn109 are the gain and time constants to be selected when the Gain Switching Input Operating Mode Selection (Pn114) is enabled.
- The gains are switched according to the condition set in the Gain Switching Mode (Pn115, Pn120 and Pn124).
- If the mechanical system inertia changes greatly or if you want to change the responsiveness depending on whether the motor is rotating or being stopped, you can achieve the appropriate control by setting the gains and time constants beforehand for each of these conditions, and switching them according to the condition.
- This parameter is automatically changed by executing realtime autotuning function. To set it manually, set the Realtime Autotuning Mode Selection (Pn002) to 0.

Pn110	Speed Feed-forward Amount					Position Fully-closed	
Setting range	0 to 1,000	Unit	0.1%	Default setting	300	Power OFF and ON	–

- Set the feed-forward amount. Increasing the set value decreases the position error and increases the responsiveness. Overshooting, however, will occur more easily.

Pn111	Speed Feed-forward Command Filter					Position Fully-closed	
Setting range	0 to 6,400	Unit	0.01 ms	Default setting	50	Power OFF and ON	–

- Set the time constant for the first-order lag filter inserted into the feed forward.
- Setting the filter may improve operation if speed overshooting occurs or the noise during operation is large when the feed-forward is set high.

Pn112	Torque Feed-forward Amount					Position Speed Fully-closed	
Setting range	0 to 1,000	Unit	0.1%	Default setting	0	Power OFF and ON	–

- Set the feed-forward amount in the torque loop. Increasing the set value decreases the position error and increases the responsiveness. Overshooting, however, will occur more easily.

Pn113	Torque Feed-forward Command Filter					Position Speed Fully-closed	
Setting range	0 to 6,400	Unit	0.01 ms	Default setting	0	Power OFF and ON	–

- Set the time constant for the first-order lag filter inserted into the feed forward.
- Setting the filter may improve operation if speed overshooting occurs or the noise during operation is large when the feed-forward is set high.

Pn114	Gain Switching Input Operating Mode Selection					All	
Setting range	0 or 1	Unit	–	Default setting	1	Power OFF and ON	–

Explanation of Set Values

Set value	Description
0	Gain 1 (PI/P switching enabled)
1	Gain 1/gain 2 switching available

- Select either PI/P operation switching or gain 1/gain 2 switching.
- PI/P operation switching is performed using gain switching (GSEL: CN1 pin 27). PI is not changed, however, if the Torque Limit Selection (Pn521) is set to 3.

Gain input	Speed loop operation
GSEL OFF	PI operation
GSEL ON	P operation

- For information on switching conditions between gain 1 and gain 2, refer to "6-7 Gain Switching Function" (P.6-23).
- If autotuning is enabled, feedforward gain and filter are set at a fixed value.

Pn115	Switching Mode in Position Control					Position Fully-closed	
Setting range	0 to 10	Unit	–	Default setting	0	Power OFF and ON	–

Explanation of Settings

(√: Enabled, –: Disabled)

Set value	Explanation			
	Gain switching conditions	Gain Switching Delay Time in Position Control (Pn116) *1	Gain Switching Level in Position Control (Pn117)	Gain Switching 1 Hysteresis in Position Control (Pn118) *2
0	Always Gain 1 (Pn100 to Pn104)	–	–	–
1	Always Gain 2 (Pn105 to Pn109)	–	–	–
2	Switching using gain switching input (GSEL) for CN1 pin 27	–	–	–
3	Torque command variation (Refer to Figure A)	√	√ *3 (× 0.05%)	√ *3 (× 0.05%)
4	Always Gain 1 (Pn100 to Pn104)	–	–	–
5	Command speed (Refer to Figure B)	√	√ (r/min)	√ (r/min)
6	Amount of position error (Refer to Figure C)	√	√ *4 (pulse)	√ *4 (pulse)
7	Command pulses received (Refer to Figure D)	√	–	–
8	Positioning completion signal (INP) OFF (Refer to Figure E)	√	–	–
9	Actual motor speed (Refer to Figure B)	√	√ (r/min)	√ (r/min)
10	Combination of command pulse input and speed (Refer to Figure F)	√	√ *5 (r/min)	√ *5 (r/min)

- Select the conditions for switching between gain 1 and gain 2 when the Gain Switching Input Operating Mode Selection (Pn114) is set to 1.
- The gain is always gain 1 regardless of the gain input if the Gain Switch input is not assigned to any input if this setting is 2.

*1. The Gain Switching Delay Time in Position Control (Pn116) becomes effective when the gain is switched from 2 to 1.

*2. The Gain Switching Hysteresis in Position Control (Pn118) is defined in the drawing below.

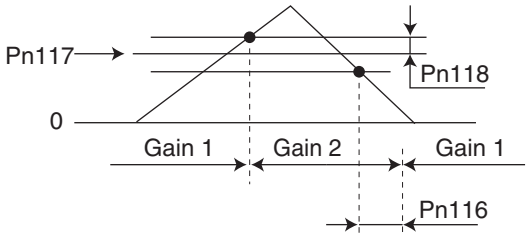

*3. The variation means the change amount in a millisecond (ms).
E.g. The set value is 200 when the condition is a 10% change in torque in 1 millisecond.

*4. This is the encoder resolution.

*5. The meanings of the gain switching delay time in position control, gain switching level in position control, and gain switching hysteresis in position control are different from normal if this is set to 10. (Refer to Figure F)

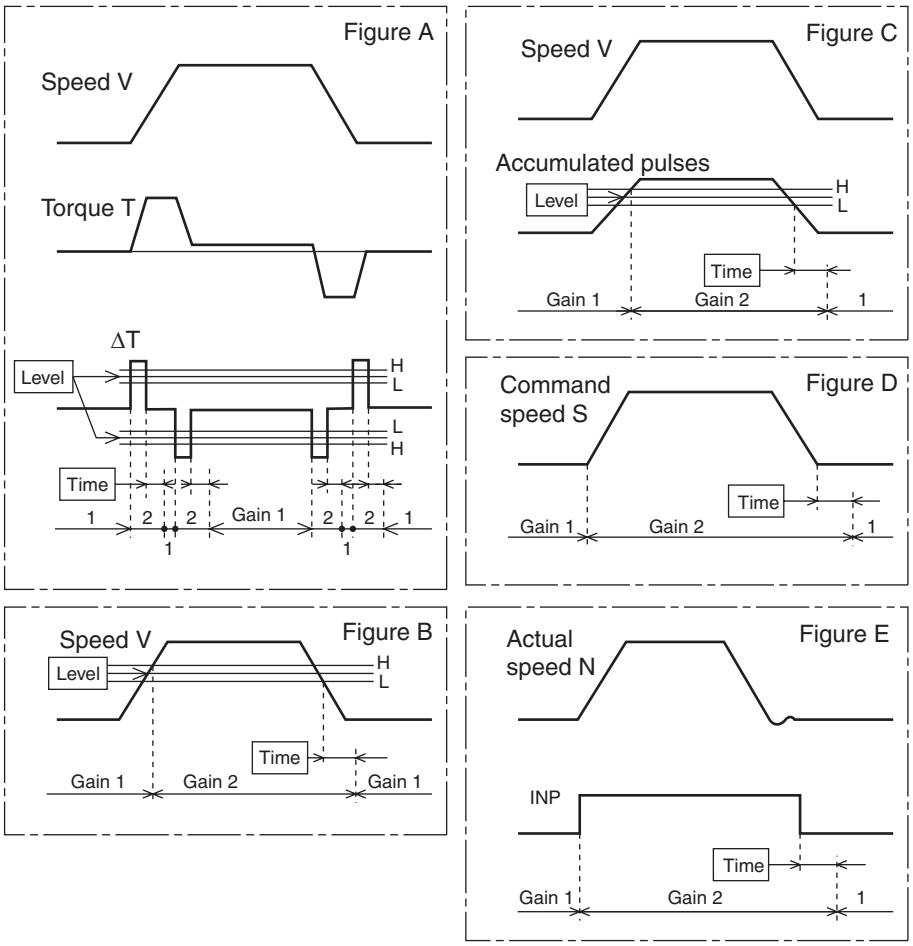

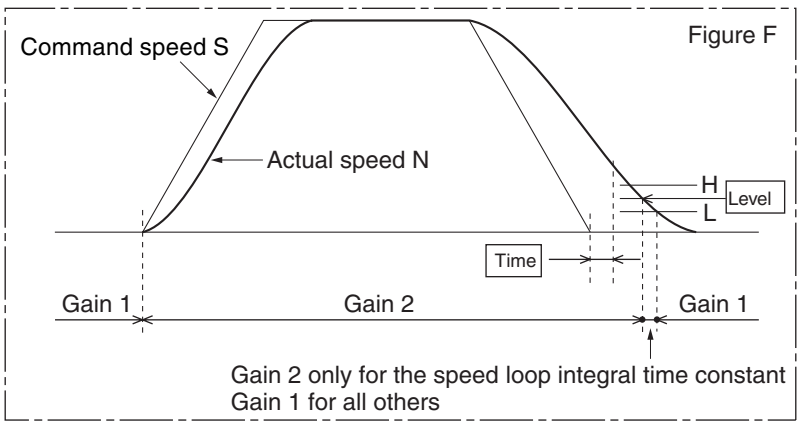

Pn116	Gain Switching Delay Time in Position Control					Position Fully-closed	
Setting range	0 to 10,000	Unit	0.1 ms	Default setting	50	Power OFF and ON	–

- Set the delay time when returning from gain 2 to gain 1 if the Switching Mode in Position Control (Pn115) is set to 3 or 5 to 10.

Pn117	Gain Switching Level in Position Control					Position Fully-closed	
Setting range	0 to 20,000	Unit	–	Default setting	50	Power OFF and ON	–

- This is enabled when the Switching Mode in Position Control (Pn115) is set to 3, 5, 6, 9 or 10. It sets the judgment level for switching between gain 1 and gain 2. The unit depends on the Switching Mode in Position Control (Pn115).

Pn118	Gain Switching Hysteresis in Position Control					Position Fully-closed	
Setting range	0 to 20,000	Unit	–	Default setting	33	Power OFF and ON	–

- Set the hysteresis width above and below the judgment level set in the Gain Switching Level in Position Control (Pn117). The unit depends on the setting of the Switching Mode in Position Control (Pn115).
  The following shows the definitions for the Gain Switching Delay Time in Position Control (Pn116), Gain Switching Level in Position Control (Pn117), and Gain Switching Hysteresis in Position Control (Pn118).

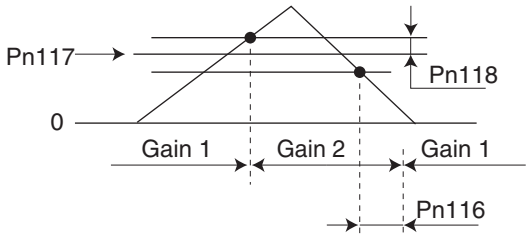

- The settings for the Gain Switching Level in Position Control (Pn117) and the Gain Switching Hysteresis in Position Control (Pn118) are enabled as absolute values (positive/negative).

Pn119	Position Gain Switching Time					Position Fully-closed	
Setting range	0 to 10,000	Unit	0.1 ms	Default setting	33	Power OFF and ON	–

If the difference between the Position Loop Gain (Pn100) and Position Loop Gain 2 (Pn105) is large during position control, this parameter can be used to suppress a rapid increase in the position loop gain. When the gain increases, it will change by the time set for this parameter.

Position Gain Switching Time

The Position Gain Switching Time (Pn119) can be set to more smoothly change the gain and reduce vibration when a large change is being made in the position loop gain during position control or fully-closed control. This smooths vibration and the changes in torque that can occur when the position loop gain is changed too quickly.

Precautions for Correct Use

- If the gain is changed to a smaller value, the setting of this parameter is ignored and the gain is changed immediately.

Example: Pn100 > Pn105

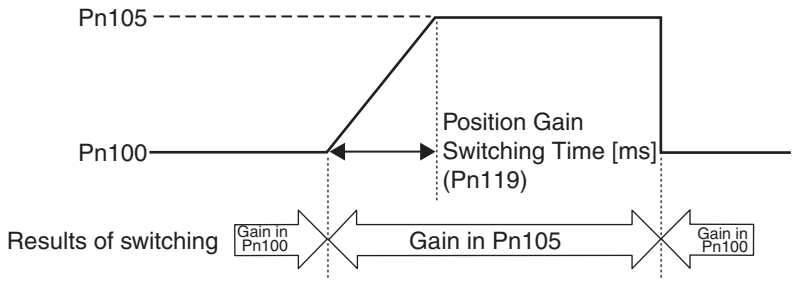

Pn120	Switching Mode in Speed Control						Speed
Setting range	0 to 5	Unit	–	Default setting	0	Power OFF and ON	–

Explanation of Settings

(√: Enabled, –: Disabled)

Set value	Explanation			
	Gain switching conditions	Gain Switching Delay Time in Speed Control (Pn121) *1	Gain Switching Level in Speed Control (Pn122)	Gain Switching Hysteresis in Speed Control (Pn123) *2
0	Always the Gain 1 (Pn100 to Pn104)	–	–	–
1	Always the Gain 2 (Pn105 to Pn109)	–	–	–
2	Switching using gain switching input (GSEL) for CN1 pin 27	–	–	–
3	Torque command variation (Refer to Figure A)	√	√ *3 (0.05%)	√ *3 (0.05%)
4	Speed command variation (Refer to Figure B)	√	√ *4 (10 r/min/s)	√ *4 (10 r/min/s)
5	Speed command (Refer to Figure C)	√	√ (r/min)	√ (r/min)

- Select the conditions for switching between gain 1 and gain 2 when the Gain Switching Input Operating Mode Selection (Pn114) is set to 1.
- The gain is always gain 1 regardless of the gain input if the switching input is not assigned when Pn120 = 2.

*1. The Gain Switching Delay Time in Speed Control (Pn121) becomes effective when the gain is switched from 2 to 1.

*2. The Gain Switching Hysteresis in Speed Control (Pn123) is defined as shown in the drawing below.

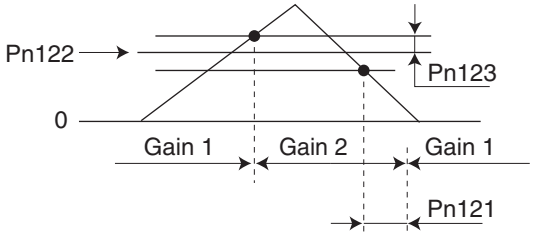

*3. The variation means the change amount in a millisecond (ms).
E.g. The set value is 200 when the condition is a 10% change in torque in 1 millisecond.

*4. The meanings of the Gain Switching Delay Time in Speed Control (Pn121), Gain Switching Level in Speed Control (Pn122), and Gain Switching Hysteresis in Speed Control (Pn123) are different from

normal if this is set to 10. (Refer to Figure D)

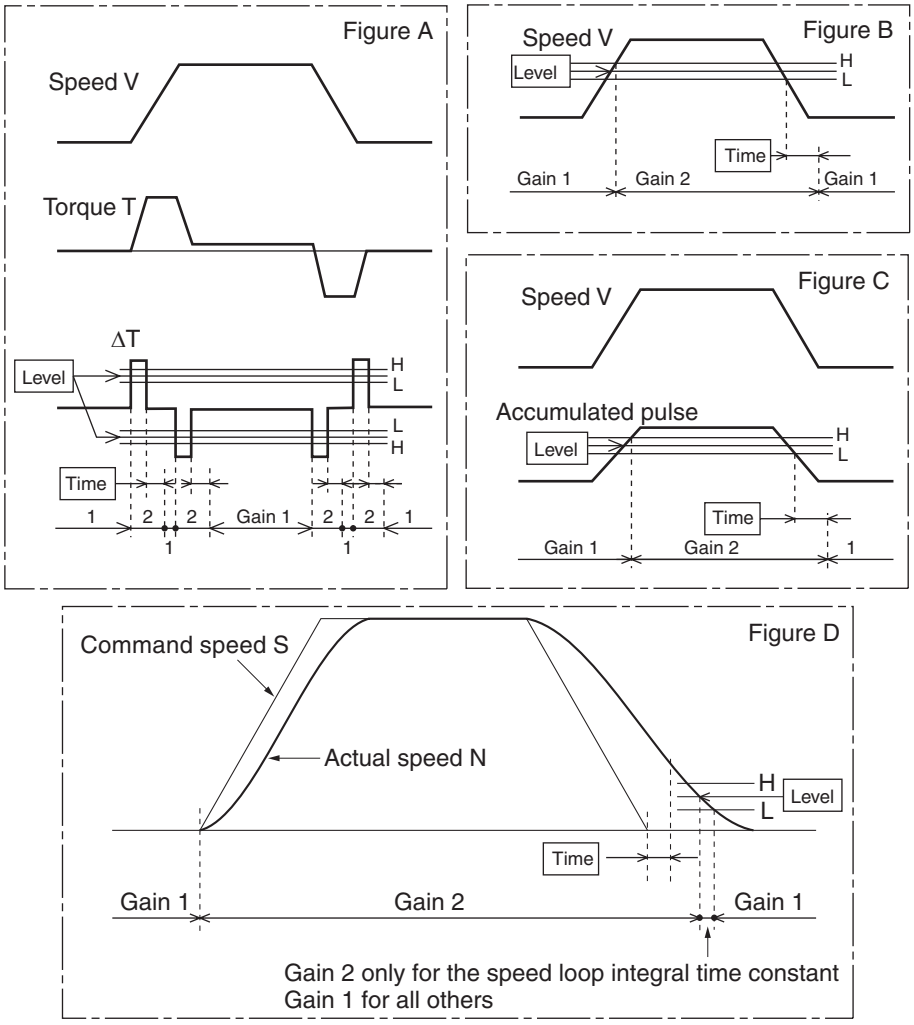

Pn121	Gain Switching Delay Time in Speed Control						Speed
Setting range	0 to 10,000	Unit	0.1 ms	Default setting	0	Power OFF and ON	–

- Set the delay time when returning from gain 2 to gain 1 if the Switching Mode in Speed Control (Pn120) is set to 3 to 5.

Pn122	Gain Switching Level in Speed Control						Speed
Setting range	0 to 20,000	Unit	–	Default setting	0	Power OFF and ON	–

- In Speed Control Mode, this is enabled when the Switching Mode in Speed Control (Pn120) is set to 3 to 5. Set the judgment level for switching between gain 1 and gain 2. The unit depends on the Switching Mode in Speed Control (Pn120).

Pn123	Gain Switching Hysteresis in Speed Control						Speed
Setting range	0 to 20,000	Unit	–	Default setting	0	Power OFF and ON	–

- Set the hysteresis width above and below the judgment level set in the Gain Switching Level in Speed Control (Pn122). The unit depends on the setting of the Switching Mode in Speed Control (Pn120).

The following shows the definitions for the Gain Switching Delay Time in Speed Control (Pn121), Gain

Switching Level in Speed Control (Pn122), and Gain Switching Hysteresis in Speed Control (Pn123).

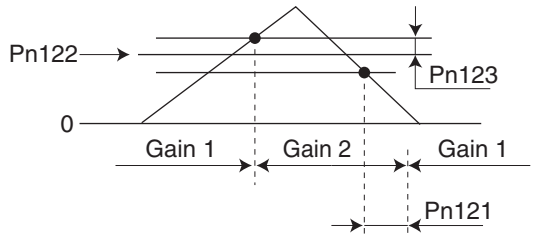

- The settings for the Gain Switching Level in Speed Control (Pn122) and the Gain Switching Hysteresis in Speed Control (Pn123) are enabled absolute values (positive/negative).

Pn124	Switching Mode in Torque Control						Torque
Setting range	0 to 3	Unit	–	Default setting	0	Power OFF and ON	–

Explanation of Settings

Set value	Explanation			
	Gain switching conditions	Gain Switching Delay Time in Torque Control (Pn125) *1	Gain Switching Level in Torque Control (Pn126)	Gain Switching Hysteresis in Torque Control (Pn127) *2
0	Always Gain 1 (Pn100 to Pn104)	–	–	–
1	Always Gain 2 (Pn105 to Pn109)	–	–	–
2	Switching using gain switching input (GSEL) for CN1 pin 27	–	–	–
3	Torque command variation (Refer to Figure A)	√	√ *3 (0.05%)	√ *3 (0.05%)

- Select the switching condition between gain 1 and gain 2 when the Gain Switching Input Operating Mode Selection (Pn114) is set to 1.
- The gain is always gain 1 regardless of the gain input if the switching input is not assigned when Pn124=2.

*1. The Gain Switching Delay Time in Torque Control (Pn125) becomes effective the gain is switched from 2 to 1.

*2. The Gain Switching Hysteresis in Torque Control (Pn127) is defined as shown in the following figure.

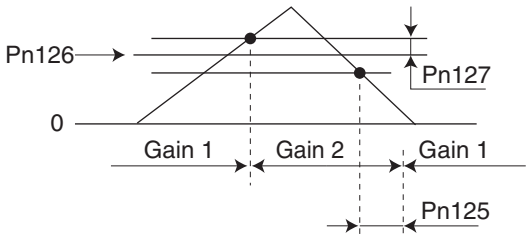

*3. The variation means the change amount in a millisecond (ms).
E.g. The set value is 200 when the condition is a 10% change in torque in 1 millisecond.

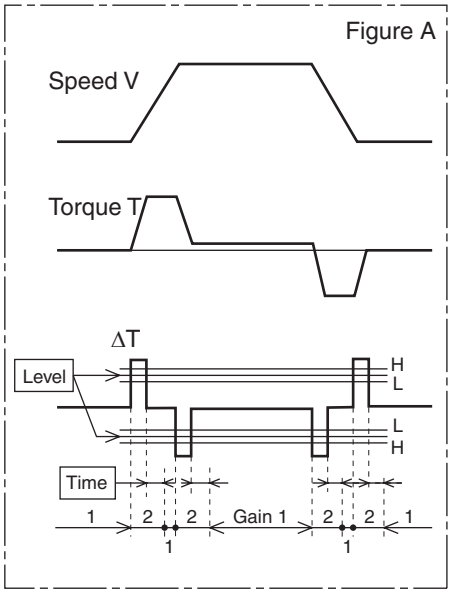

Pn125	Gain Switching Delay Time in Torque Control						Torque
Setting range	0 to 10,000	Unit	0.1 ms	Default setting	0	Power OFF and ON	–

- Set the delay time when returning from gain 2 to gain 1 if the Switching Mode in Torque Control (Pn124) is set to 3.

Pn126	Gain Switching Level in Torque Control						Torque
Setting range	0 to 20,000	Unit	–	Default setting	0	Power OFF and ON	–

- This is enabled when the Switching Mode in Torque Control (Pn124) is set to 3. It sets the judgment level for switching between gain 1 and gain 2. The unit depends on the setting of Switching Mode in Torque Control (Pn124).

Pn127	Gain Switching Hysteresis in Torque Control						Torque
Setting range	0 to 20,000	Unit	–	Default setting	0	Power OFF and ON	–

- Set the hysteresis width above and below the judgment level set in the Gain Switching Level in Torque Control (Pn126). The unit depends on the setting of Switching Mode in Torque Control (Pn124).
  The following shows the definitions for the Gain Switching Delay Time in Torque Control (Pn125), Gain Switching Level in Torque Control (Pn126), and Gain Switching Hysteresis in Torque Control (Pn127).

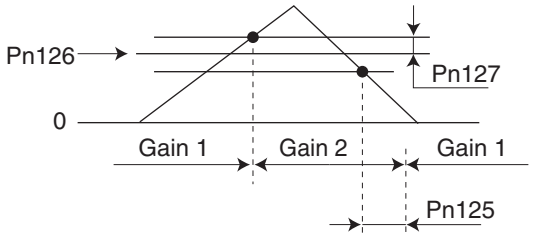

- The settings for the Gain Switching Level in Torque Control (Pn126) and the Gain Switching Hysteresis in Torque Control (Pn127) are enabled as absolute values (positive/negative).

8-3 Vibration Suppression Parameters

Pn200	Adaptive Filter Selection					Position Speed Fully-closed	
Setting range	0 to 4	Unit	–	Default setting	0	Power OFF and ON	–

Explanation of Set Values

Set value	Description
0	Disabled. The current values are held for the parameters related to notch filters 3 and 4.
1	One adaptive filter is enabled. The parameter related to notch filter 3 is updated based on the applicable result.
2	Two adaptive filter is enabled. The parameters related to notch filters 3 and 4 are updated based on the applicable result.
3	The resonance frequency is measured. The measurement result can be checked using CX-Drive. The current values are held for the parameters related to notch filters 3 and 4.
4	Adaptive result is cleared.Parameters related to notch filters 3 and 4 are disabled and the adaptive result is cleared.

- Set the operation of the adaptive filter.
- The adaptive filter is normally disabled in the Torque Control Mode.

Pn201	Notch 1 Frequency Setting					All	
Setting range	50 to 5,000	Unit	Hz	Default setting	5000	Power OFF and ON	–

- Set the frequency of resonance suppression notch filter 1.
- The notch filter function will be disabled if this parameter is set to 5,000.

Pn202	Notch 1 Width Setting					All	
Setting range	0 to 20	Unit	–	Default setting	2	Power OFF and ON	–

- Set the width of resonance suppression notch filter 1 to one of 20 levels.
- Increasing the set value widens the notch width. Normally, use the default set value.

Pn203	Notch 1 Depth Setting					All	
Setting range	0 to 99	Unit	–	Default setting	0	Power OFF and ON	–

- Set the notch depth of resonance suppression notch filter 1.
- Increasing the set value shortens the notch depth and the phase lag.

Pn204	Notch 2 Frequency Setting					All	
Setting range	50 to 5,000	Unit	Hz	Default setting	5000	Power OFF and ON	–

- Set the notch frequency of resonance suppression notch filter 2.
- The notch filter function will be disabled if this parameter is set to 5,000.

Pn205	Notch 2 Width Setting					All	
Setting range	0 to 20	Unit	–	Default setting	2	Power OFF and ON	–

- Select the notch width of resonance suppression notch filter 2.
- Increasing the set value widens the notch width. Normally, use the default set value.

Pn206	Notch 2 Depth Setting						All
Setting range	0 to 99	Unit	–	Default setting	0	Power OFF and ON	–

- Set the notch depth of resonance suppression notch filter 2.
- Increasing the set value shortens the notch depth and the phase lag.

Pn207	Notch 3 Frequency Setting						All
Setting range	50 to 5,000	Unit	Hz	Default setting	5000	Power OFF and ON	–

- Set the notch frequency of resonance suppression notch filter 3.
- The notch filter function will be disabled if this parameter is set to 5,000.

Pn208	Notch 3 Width Setting						All
Setting range	0 to 20	Unit	–	Default setting	2	Power OFF and ON	–

- Select the notch width of resonance suppression notch filter 3.
- Increasing the set value widens the notch width. Normally, use the default set value.

Pn209	Notch 3 Depth Setting						All
Setting range	0 to 99	Unit	–	Default setting	0	Power OFF and ON	–

- Set the notch depth of resonance suppression notch filter 3.
- Increasing the set value shortens the notch depth and the phase lag.

Pn210	Notch 4 Frequency Setting						All
Setting range	50 to 5,000	Unit	Hz	Default setting	5000	Power OFF and ON	–

- Set the notch frequency of resonance suppression notch filter 4.
- The notch filter function will be disabled if this parameter is set to 5,000.

Pn211	Notch 4 Width Setting						All
Setting range	0 to 20	Unit	–	Default setting	2	Power OFF and ON	–

- Select the notch width of resonance suppression notch filter 4.
- Increasing the set value widens the notch width. Normally, use the default set value.

Pn212	Notch 4 Depth Setting						All
Setting range	0 to 99	Unit	–	Default setting	0	Power OFF and ON	–

- Set the notch depth of resonance suppression notch filter 4.
- Increasing the set value shortens the notch depth and the phase lag.

Pn213	Damping Filter Selection						Position
Setting range	0 to 3	Unit	–	Default setting	0	Power OFF and ON	–

Explanation of Set Values

Set value	Description
0	Damping filter 1 and 2 enabled
1	With external input (DFSEL1), either 1 and 3 or 2 and 4 can be selected. · Open: Damping filters 1 and 3 enabled · Shorted: Damping filters 2 and 4 enabled
2	With external input (DFSEL1 and DFSEL2), one of the filters 1 to 4 can be selected. · When DFSEL1 and DFSEL2 are both open: Damping filter 1 enabled · When DFSEL1 is shorted and DFSEL2 is open: Damping filter 2 enabled · When DFSEL1 is open and DFSEL2 is shorted: Damping filter 3 enabled · When DFSEL1 and DFSEL2 are both shorted: Damping filter 4 enabled
3	The damping filters are switched with position command direction. · Forward direction: Damping filters 1 and 3 enabled · Reverse direction: Damping filters 2 and 4 enabled

Pn214	Damping Frequency 1						Position
Setting range	0 to 2,000	Unit	0.1 Hz	Default setting	0	Power OFF and ON	–

- Set damping frequency 1 to suppress vibration at the end of the load in damping control.
- Measure the frequency of vibration at the end of the load and make the setting in units of 0.1 Hz.
- The range of frequency setting is 1.0 to 200.0 Hz. The function is disabled if the setting is 0 to 0.9 Hz.
- Refer to "6-1 Damping Control" (P.6-1) for more information on settings.

Pn215	Damping Filter 1 Setting						Position
Setting range	0 to 1,000	Unit	0.1 Hz	Default setting	0	Power OFF and ON	–

- First set the Damping Frequency 1 (Pn214). Then reduce the setting if torque saturation occurs or increase the setting to increase operation speed. Normally, use a setting of 0.
- Set value is restricted in the following manner.
  Upper limit: Corresponding damping frequency
  Lower limit: Damping frequency + damping filter setting ≥ 100
- Refer to "6-1 Damping Control" (P.6-1) for more information on settings.

Pn216	Damping Frequency 2						Position
Setting range	0 to 2,000	Unit	0.1 Hz	Default setting	0	Power OFF and ON	–

- Set Damping Frequency 2 to suppress vibration at the end of the load in damping control.
- Measure the frequency of vibration at the end of the load and make the setting in units of 0.1 Hz.
- The range of frequency setting is 1.0 to 200.0 Hz. The function is disabled if the setting is 0 to 0.9 Hz.
- Refer to "6-1 Damping Control" (P.6-1) for more information on settings.

Pn217	Damping Filter 2 Setting						Position
Setting range	0 to 1,000	Unit	0.1 Hz	Default setting	0	Power OFF and ON	–

- First set the Damping Frequency 2 (Pn216). Then reduce the setting if torque saturation occurs or increase the setting to increase operation speed. Normally, use a setting of 0.
- Set value is restricted in the following manner.
  Upper limit: Corresponding damping frequency
  Lower limit: Damping frequency + damping filter setting ≥ 100

♦Refer to "6-1 Damping Control" (P.6-1) for more information on settings.

Pn218	Damping Frequency 3					Position	
Setting range	0 to 2,000	Unit	0.1 Hz	Default setting	0	Power OFF and ON	–

- Set Damping Frequency 3 to suppress vibration at the end of the load in damping control.
- Measure the frequency of vibration at the end of the load and make the setting in units of 0.1 Hz.
- The range of frequency setting is 1.0 to 200.0 Hz. The function is disabled if the setting is 0 to 0.9 Hz.
- Refer to "6-1 Damping Control" (P.6-1) for more information on settings.

Pn219	Damping Filter 3 Setting					Position	
Setting range	0 to 1,000	Unit	0.1 Hz	Default setting	0	Power OFF and ON	–

♦First set the Damping Frequency 3 (Pn218). Then reduce the setting if torque saturation occurs or increase the setting to increase operation speed. Normally, use a setting of 0.
♦Set value is restricted in the following manner.
Upper limit: Corresponding damping frequency
Lower limit: Damping frequency + damping filter setting ≥ 100
♦Refer to "6-1 Damping Control" (P.6-1) for more information on settings.

Pn220	Damping Frequency 4					Position	
Setting range	0 to 2,000	Unit	0.1 Hz	Default setting	0	Power OFF and ON	–

- Set Damping Frequency 4 to suppress vibration at the end of the load in damping control.
- Measure the frequency of vibration at the end of the load and make the setting in units of 0.1 Hz.
- The range of frequency setting is 1.0 to 200.0 Hz. The function is disabled if the setting is 0 to 0.9 Hz.
- Refer to "6-1 Damping Control" (P.6-1) for more information on settings.

Pn221	Damping Filter 4 Setting					Position	
Setting range	0 to 1,000	Unit	0.1 Hz	Default setting	0	Power OFF and ON	–

♦First set the Damping Frequency 4 (Pn220). Then reduce the setting if torque saturation occurs or increase the setting to increase operation speed. Normally, use a setting of 0.
♦Set value is restricted in the following manner.
Upper limit: Corresponding damping frequency
Lower limit: Damping frequency + damping filter setting ≥ 100
♦Refer to "6-1 Damping Control" (P.6-1) for more information on settings.

Pn222	Position Command Filter Time Constant					Position Fully-closed	
Setting range	0 to 10,000	Unit	0.1 ms	Default setting	0	Power OFF and ON	–

♦The position command filter time constant is the first-order lag filter inserted after the electronic gear ratio for the command pulse input.
♦The position command filter time constant can be used for the following:
- If the command pulses change abruptly, the filter can be used to reduce the stepping movement of the motor.
- The following are examples of when the command pulses can change abruptly:
  The electronic gear ratio setting is high (10 times or higher).
  The command pulse frequency is low.

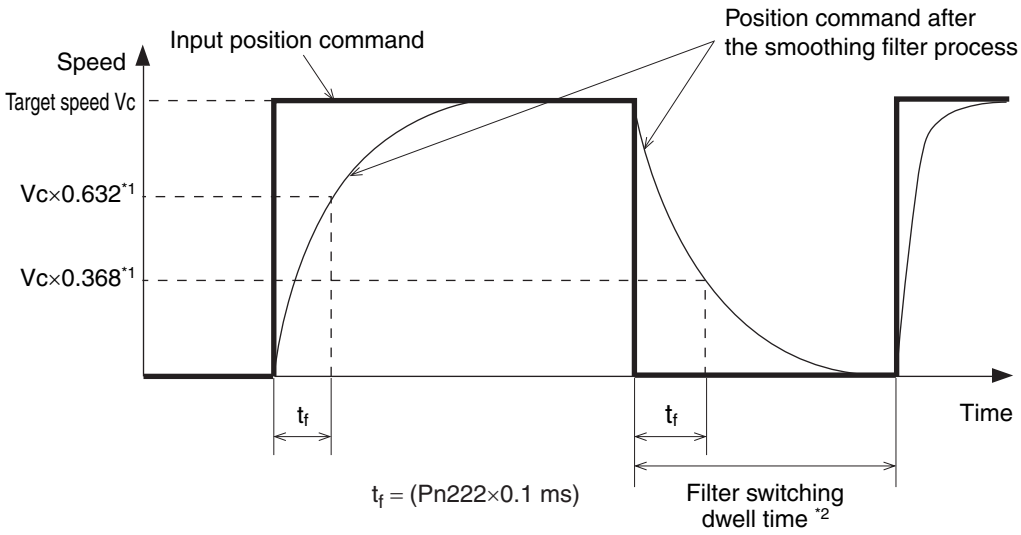

*1 The actual process involves calculation error.

*2 If accumulated pulses remain within the filter after the filter set value has been changed, etc., the motor may operate at a speed higher than the command speed immediately after switching the filter.

Pn223	Smoothing Filter Time Constant					Position Fully-closed	
Setting range	0 to 10,000	Unit	0.1 ms	Default setting	0	Power OFF and ON	–

- Set the FIR filter time constant used for command pulse input. (FIR: Finite impulse response)
- The higher the set value, the smoother the command pulses.

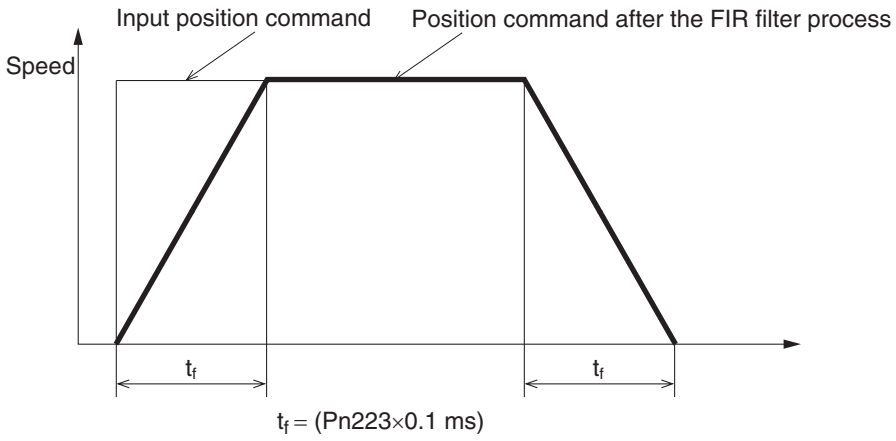

8-4 Analog Control Parameters

Pn300	Command Speed Selection						Speed
Setting range	0 to 3	Unit	–	Default setting	0	Power OFF and ON	–

Explanation of Set Values

Set value	Description
0	Analog speed command
1	No. 1 Internally Set Speed to No. 4 Internally Set Speed (Pn304 to Pn307)
2	No. 1 Internally Set Speed to No. 3 Internally Set Speed (Pn304 to Pn306), analog speed command
3	No. 1 Internally Set Speed to No. 8 Internally Set Speed (Pn304 to Pn311)

- Select the speed command when using speed control. The drive has internally set speed function that can be used to easily achieve speed control by using contact inputs.
- For details on internally set speed function, refer to "5-4 Internally Set Speed Control" (P.5-19).

Pn301	Speed Command Direction Selection						Speed
Setting range	0 or 1	Unit	–	Default setting	0	Power OFF and ON	–

Explanation of Set Values

Set value	Description
0	Use the sign of the speed command: Example: +: Forward, –: Reverse
1	Use the speed command sign selection (VSIGN); Example: OFF: Forward, ON: Reverse

- Set to reverse the polarity of the speed command input (REF: CN1 pin 14). This is used to change the motor rotation direction without changing the polarity of host device command signals.
- The default setting for this parameter is 0. By rotating to the reverse direction with the +command keeps the compatibility with all OMNUC W-Series Servo Drives.
- The operation of the Servomotor may be abnormal if the polarity of the speed command signal from the Position Control Unit does not agree with the setting of this parameter when the Servo Drive system is comprised of the combination of the Servo Drive set to the Speed Control Mode and an external Position Control Unit.

Command Speed Selection (Pn300)	Speed Command Direction Selection (Pn301)	Analog Speed Command Rotation Direction Switching (Pn303)	Analog speed command (REF)	Speed command sign selection (VSIGN)	Motor rotation direction	Conversion graph
0	0	0	+Voltage (0 to 10 V)	Not affected	Forward direction	Refer to Figure A
			-Voltage (-10 to 0 V)	Not affected	Reverse direction	
		1	+Voltage (0 to 10 V)	Not affected	Reverse direction	Refer to Figure B
			-Voltage (-10 to 0 V)	Not affected	Forward direction	
	1	Not affected	+Voltage (0 to 10 V)	OFF	Forward direction	Refer to Figure C
			-Voltage (-10 to 0 V)			
			+Voltage (0 to 10 V)	ON	Reverse direction	
			-Voltage (-10 to 0 V)			

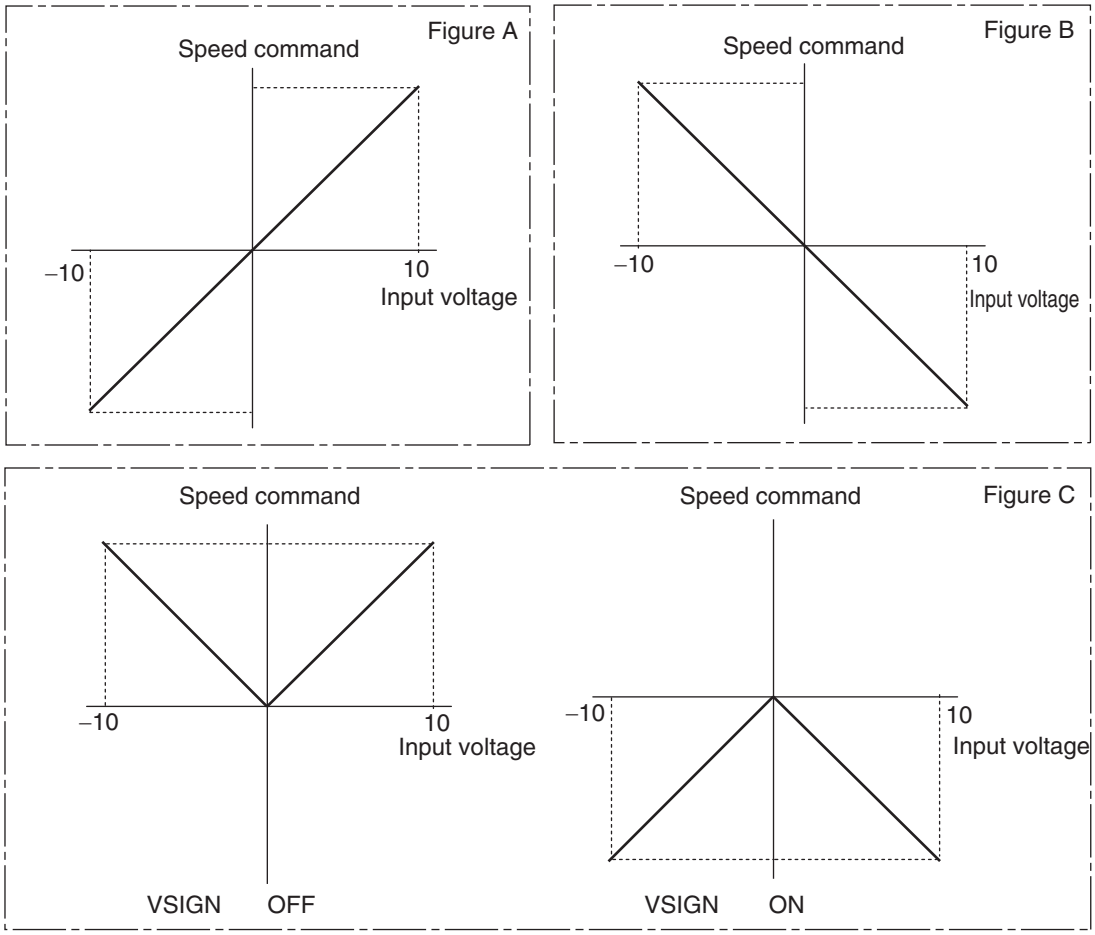

Pn302	Speed Command Scale					Speed Torque	
Setting range	0 to 2,000	Unit	(r/min)/V	Default setting	500	Power OFF and ON	–

- Set the relation between the voltage applied to the speed command input (REF: CN1 pin 14) and the motor speed.
- For details on speed control, refer to "5-2 Speed Control" (P.5-7).
- This parameter sets the relation between voltage and speed limit when applying an analog speed limit in Torque Control Mode

Pn303	Analog Speed Command Rotation Direction Switching					Speed	
Setting range	0 or 1	Unit	–	Default setting	1	Power OFF and ON	–

Explanation of Set Values

Set value	Description
0	Rotation direction is changed by analog speed command (REF) voltage. +Voltage: Forward direction -Voltage: Reverse direction
1	Rotation direction is changed by analog speed command voltage. +Voltage: Reverse direction -Voltage: Forward direction

Pn304	No. 1 Internally Set Speed					Speed	
Setting range	–20,000 to 20,000	Unit	r/min	Default setting	0	Power OFF and ON	–

Pn305	No. 2 Internally Set Speed						Speed
Setting range	–20,000 to 20,000	Unit	r/min	Default setting	0	Power OFF and ON	–

Pn306	No. 3 Internally Set Speed						Speed
Setting range	–20,000 to 20,000	Unit	r/min	Default setting	0	Power OFF and ON	–

Pn307	No. 4 Internally Set Speed						Speed
Setting range	–20,000 to 20,000	Unit	r/min	Default setting	0	Power OFF and ON	–

Pn308	No. 5 Internally Set Speed						Speed
Setting range	–20,000 to 20,000	Unit	r/min	Default setting	0	Power OFF and ON	–

Pn309	No. 6 Internally Set Speed						Speed
Setting range	–20,000 to 20,000	Unit	r/min	Default setting	0	Power OFF and ON	–

Pn310	No. 7 Internally Set Speed						Speed
Setting range	–20,000 to 20,000	Unit	r/min	Default setting	0	Power OFF and ON	–

Pn311	No. 8 Internally Set Speed						Speed
Setting range	–20,000 to 20,000	Unit	r/min	Default setting	0	Power OFF and ON	–

- If internal speed settings are enabled in the Command Speed Selection (Pn300), set the No. 1 to 4 internally set speed in Pn304 to Pn307 and the No. 5 to 8 internally set speed in Pn308 to Pn311. Set the speed in r/min.
- The polarity of the set values indicates the polarity of the internally set speed.

+	The forward direction as viewed from the shaft end
–	The reverse direction as viewed from the shaft end

- The absolute value of the parameter setting is limited by the Overspeed Level Setting (Pn513).

Pn312	Soft Start Acceleration Time						Speed
Setting range	0 to 10,000	Unit	ms/(1,000 r/min)	Default setting	0	Power OFF and ON	–

Pn313	Soft Start Deceleration Time						Speed
Setting range	0 to 10,000	Unit	ms/(1,000 r/min)	Default setting	0	Power OFF and ON	–

- Control the speed by setting acceleration/deceleration to the speed command inside the drive.
- A soft start can be set when inputting speed commands of stepping movement or when using internal speed setting.
- Do not set acceleration/deceleration time settings when using the drive in combination with an external position loop. (Set both Pn312 and Pn313 to 0.)

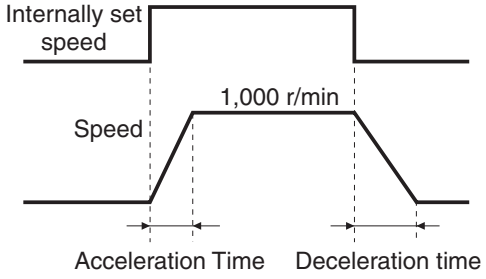

Pn314	S-curve Acceleration/Deceleration Time Setting						Speed
Setting range	0 to 1,000	Unit	ms	Default setting	0	Power OFF and ON	–

- Set the pseudo-S-curve acceleration/deceleration value to add to the speed command to enable smooth operation. This is useful for applications where impact may occur due to a large change in acceleration or deceleration when starting or stopping with linear acceleration or deceleration.

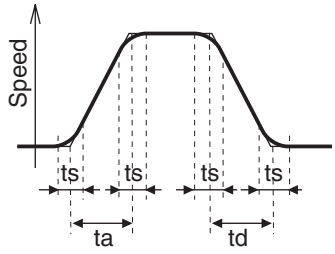

1. Basic linear acceleration time and deceleration time are set by Pn312 and Pn313, respectively.
2. The S-curve time is set by Pn314 (unit: 2 ms) based on the time width around the point of inflection during linear acceleration and deceleration.

ta: Pn312
td: Pn313
ts: Pn314

Use $\frac{ta}{2} > ts$, and $\frac{td}{2} > ts$ as settings.

Pn315	Zero Speed Designation Selection						Speed Torque
Setting range	0 to 3	Unit	–	Default setting	0	Power OFF and ON	–

Explanation of Set Values

Set value	Description
0	Zero speed designation function is disabled.
1	Speed command becomes 0 upon zero speed designation input. (Refer to Figure A)
2	Speed command becomes 0 upon zero speed designation input, and servo locks with position control when actual speed reaches below Zero Speed Designation Level (Pn316). (Refer to Figure B)
3	Servo locks with position control upon zero speed designation input and when speed command reaches below Zero Destination Level (Pn316). (Refer to Figure C)

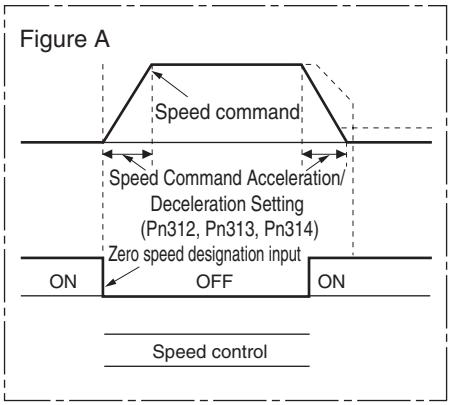

- When the zero speed designation input is turned ON, the speed command is forcibly set to 0.
- Set the acceleration/deceleration setting of the speed command using Soft Start Acceleration Time (Pn312), Soft Start Deceleration Time (Pn313) or S-curve Acceleration/Deceleration Time Setting (Pn314).

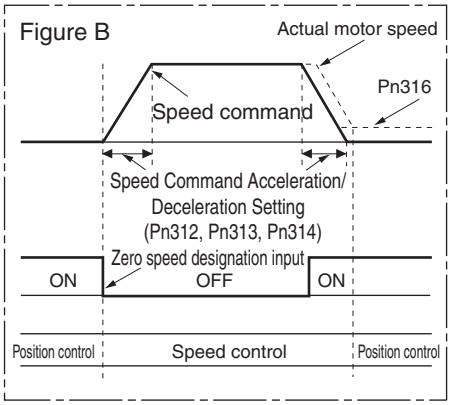

- If the speed command is equal to or less than the Position Lock Level Setting (Pn316) minus 10 r/min, operation switches to position control and the servo is locked. If the speed command becomes equal to or greater than the Position Lock Level Setting (Pn316) plus 10 r/min, operation switches from position to speed control and the motor rotates at the command speed.
- Since the position command for position control is forced to be 0, properly set the position loop gain, various error detection functions and other settings.
- Use this parameter when the Control Mode Selection (Pn001) is set to 1 (speed control).
  This may not operate correctly if the Control Mode Setting (Pn001) is set to 3 (position or speed control) or 4 (position or torque control).

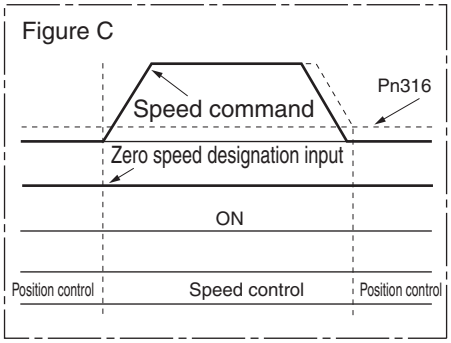

- When the zero speed designation input is turned ON and the speed command is less than the Position Lock Level Setting (Pn316), the operation switches to position control and servo locks.
- When the zero speed designation input is turned ON, the speed command will never be 0. You need to change the speed command.
- Since the operation is executed as a normal position control during position control, properly set the position loop gain, various alarm detection functions and other settings.
- Use this parameter when the Control Mode Selection (Pn001) is set to 1 (speed control).

This may not operate correctly if the Control Mode Setting (Pn001) is set to 3 (position or speed control) or 4 (position or torque control).

Pn316	Position Lock Level Setting					Speed Torque	
Setting range	10 to 20,000	Unit	r/min	Default setting	30	Power OFF and ON	–

- Servo locks with position control when the speed of the motor is lower than the setting of this parameter.
- The setting of this parameter is valid for both forward and reverse direction regardless of the motor rotation direction.

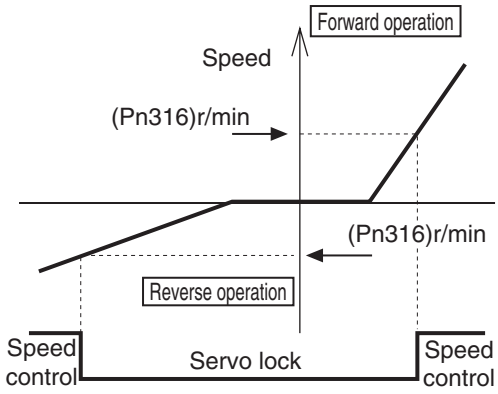

Pn317	Torque Command/Speed Limit Selection					Torque	
Setting range	0 to 2	Unit	–	Default setting	0	Power OFF and ON	–

Explanation of Set Values

Set value	Torque command	Speed limit
0	Analog input 1 (TREF1)	Pn321
1	Analog input 2 (TREF2)	Analog input 1 (VLIM)
2	Analog input 1 (TREF1)	Pn321, Pn322

- It depends on the control mode.
- When the control mode is set to speed control/torque control, the torque command input is set to analog input 2.
- If analog input 1 is used for the speed limit, the speed control scale is set in Pn302. The applied voltage is converted to a speed limit as shown below when the analog speed limit is in effect.

Speed limit [r/min] = |Pn302 × Input voltage [V]|

An example is shown below for Pn302 = 500 [r/min/V]

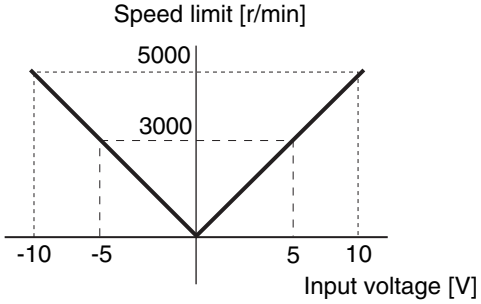

Pn318	Torque Command Direction Selection						Torque
Setting range	0 or 1	Unit	–	Default setting	0	Power OFF and ON	–

Explanation of Set Values

Set value	Description
0	Method for designating the direction for the torque command: By analogue torque command polarity
1	Method for designating the direction for the torque command: By digital input TSIGN

- The default setting for this parameter is 0. By rotating to the reverse direction with the +command keeps the compatibility with all OMNUC W-Series Servo Drives.

Torque Command /Speed Limit Selection (Pn317)	Torque Command Direction Selection (Pn318)	Analog Torque Command Rotation Direction Switching (Pn320)	Analog torque command (TREF)	Torque command sign selection (TSIGN)	Motor rotation direction	Conversion graph
0	0	0	+Voltage (0 to 10 V)	Not affected	Forward direction	Refer to Figure A
			-Voltage (-10 to 0 V)	Not affected	Reverse direction	
		1	+Voltage (0 to 10 V)	Not affected	Reverse direction	Refer to Figure B
			-Voltage (-10 to 0 V)	Not affected	Forward direction	
	1	Not affected	+Voltage (0 to 10 V)	OFF	Forward direction	Refer to Figure C
			-Voltage (-10 to 0 V)			
			+Voltage (0 to 10 V)	ON	Reverse direction	
			-Voltage (-10 to 0 V)			

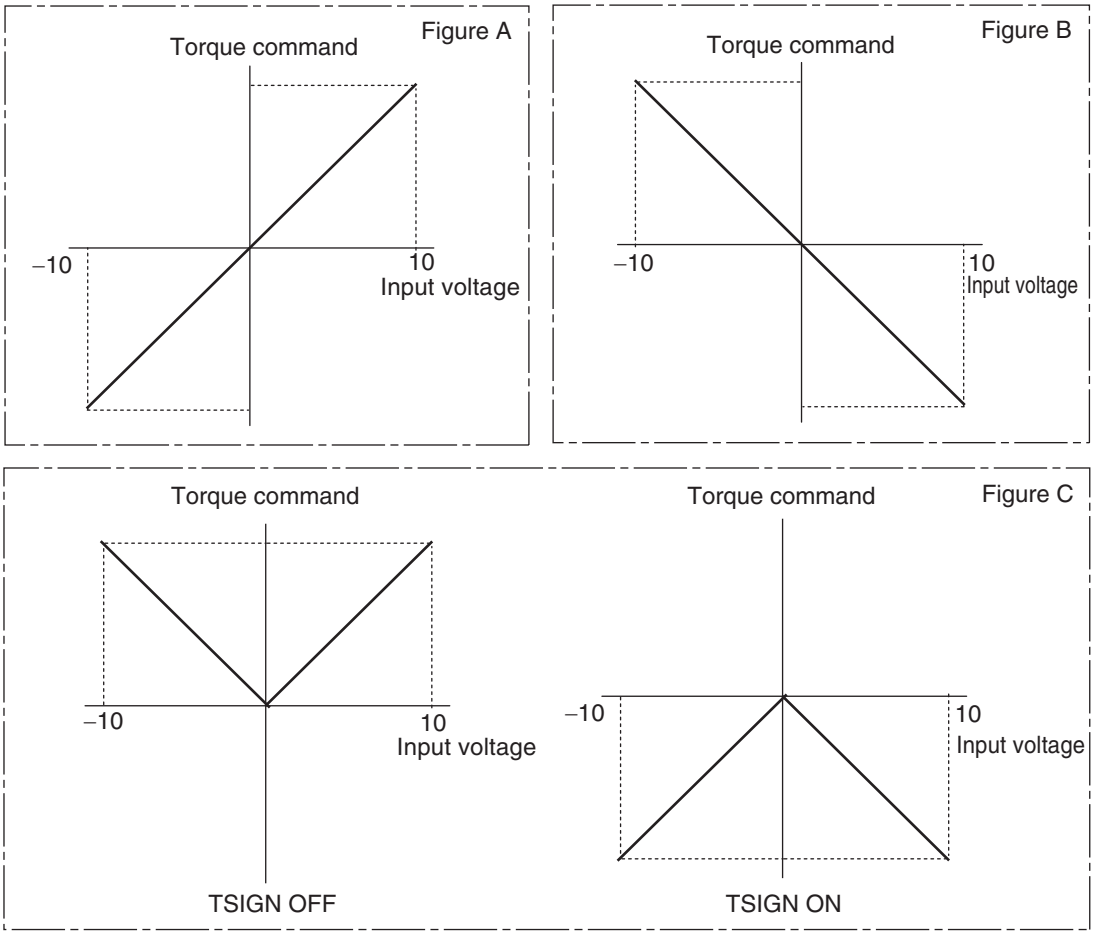

Pn319	Torque Command Scale						Torque
Setting range	10 to 100	Unit	0.1 V/100%	Default setting	30	Power OFF and ON	–

- Set the relation between the voltage applied to the torque reference input (TREF1: CN1 pin 14, TREF2: CN2 pin 16) and the motor speed.
- Refer to "5-3 Torque Control" (P.5-14) for more information on torque command scale.

Pn320	Analog Torque Command Rotation Direction Switching						Torque
Setting range	0 to 1	Unit	–	Default setting	0	Power OFF and ON	–

Explanation of Set Values

Set value	Description
0	Direction of motor torque: The +command indicates the forward direction as viewed from the shaft end.
1	Direction of motor torque: The +command indicates the reverse direction as viewed from the shaft end.

- Reverse the polarity of the torque command input (REF/TREF1: CN1 pin 14 or PCL/TREF2: CN1 pin 16).

Pn321	Speed Limit Value Setting						Torque
Setting range	0 to 20,000	Unit	r/min	Default setting	50	Power OFF and ON	–

Pn322	Reverse Direction Speed Limit Value Setting						Torque
Setting range	0 to 20,000	Unit	r/min	Default setting	0	Power OFF and ON	–

- Corresponding speed limit values during torque control is shown in the table below.

Torque Command/ Speed Limit Selection (Pn317)	Speed Limit Value Setting (Pn321)	Reverse Direction Speed Limit Value Setting (Pn322)	Zero Speed Designation Selection (Pn315)	Zero speed clamp	Analog torque command direction	Speed limit value
0	0 to 20,000	Not affected	0	Not affected	Not affected	Pn321 set value
			1 to 3	OFF		Pn321 set value
				ON		0
1	0 to 20,000	0 to 20,000	0	Not affected	Forward direction	Pn321 set value
					Reverse direction	Pn322 set value
	0 to 20,000	1 to 20,000	1 to 3	OFF	Forward direction	Pn321 set value
					Reverse direction	Pn322 set value
	0 to 20,000	1 to 20,000	1 to 3	ON	Not affected	0

Pn323	External Feedback Pulse Type Selection						Fully-closed
Setting range	0 to 2	Unit	–	Default setting	0	Power OFF and ON	Yes

Explanation of Set Values

Set value	Description
0	Phase-AB output type * 1
1	Incremental encoder with serial communications
2	Absolute encoder with serial communications

*1. The drive internal process count direction relative to the external encoder of phase-AB output type is explained below.

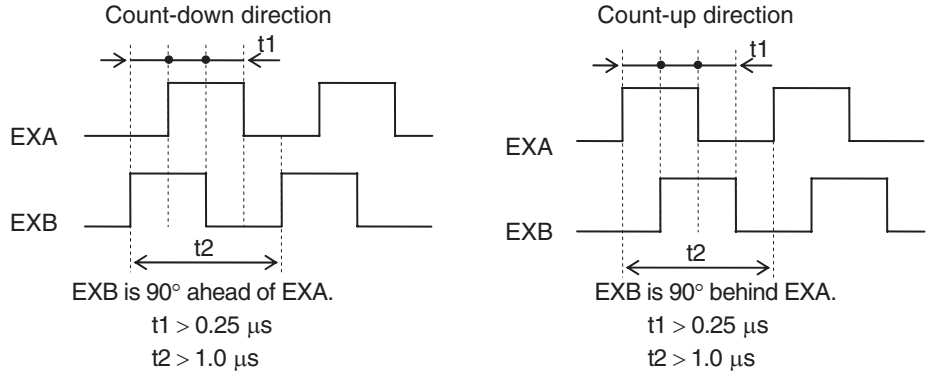

- For the external encoder connection direction, set the direction so that count-up occurs when the motor shaft is rotating counterclockwise, and count-down occurs when the motor shaft is rotating clockwise. If the connection direction cannot be selected due to installation conditions, etc., the count direction can be reversed using External Feedback Pulse Direction Switching (Pn326).
- Take note that if Pn000 = 1, the encoder count direction becomes opposite to the count direction used for monitoring the total external encoder feedback pulses, etc.
  If Pn000 = 0, the count direction matches the count direction for monitoring.
- Even when the speed command is within the Drive's speed command range, an acceleration error will occur if the speed command exceeds the maximum speed of motor shaft rotation.

Pn324	External Feedback Pulse Dividing Numerator					Fully-closed	
Setting range	0 to 2^{20}	Unit	–	Default setting	0	Power OFF and ON	Yes

Pn325	External Feedback Pulse Dividing Denominator					Fully-closed	
Setting range	1 to 2^{20}	Unit	–	Default setting	10000	Power OFF and ON	Yes

- Check the number of encoder pulses per motor rotation and number of external encoder pulses per motor rotation, and set External Feedback Pulse Dividing Numerator (Pn324) and External Feedback Pulse Dividing Denominator (Pn325).

$$\frac{\text{Pn324}}{\text{Pn325}} = \frac{\text{Encoder resolution per motor rotation [pulses]}}{\text{External encoder resolution per motor rotation [pulses]}}$$

- If this ratio is incorrect, the deviation between the position calculated from encoder pulses and position calculated from external encoder pulses will increase. Particularly when the moving distance is long, an excessive deviation error will occur.
- Set Pn324 to 0 to have encoder resolution automatically set as numerator.

Pn326	External Feedback Pulse Direction Switching					Fully-closed	
Setting range	0 or 1	Unit	–	Default setting	0	Power OFF and ON	Yes

Explanation of Set Values

Set value	Description
0	External encoder feedback pulse count direction not reversed
1	External encoder feedback pulse count direction reversed

Pn327	External Feedback Pulse Phase-Z Setting					Fully-closed	
Setting range	0 or 1	Unit	–	Default setting	0	Power OFF and ON	Yes

Explanation of Set Values

Set value	Description
0	Phase-Z disconnection detection enabled
1	Phase-Z disconnection detection disabled

Pn328	Internal/External Feedback Pulse Error Counter Overflow Level					Fully-closed	
Setting range	1 to 2^{27}	Unit	Command unit	Default setting	16000	Power OFF and ON	Yes

- Set the allowable difference (feedback pulse error) between the motor (encoder) position and load (external encoder) position in command units.

Pn329	Internal/External Feedback Pulse Error Counter Reset					Fully-closed	
Setting range	0 to 100	Unit	Rotation	Default setting	0	Power OFF and ON	Yes

- The feedback pulse error is reset every time the motor rotates for the amount set by the Internal/ External Feedback Pulse Error Counter Reset (Pn329). This can be used for applications where feedback pulse error accumulates due to slippage.

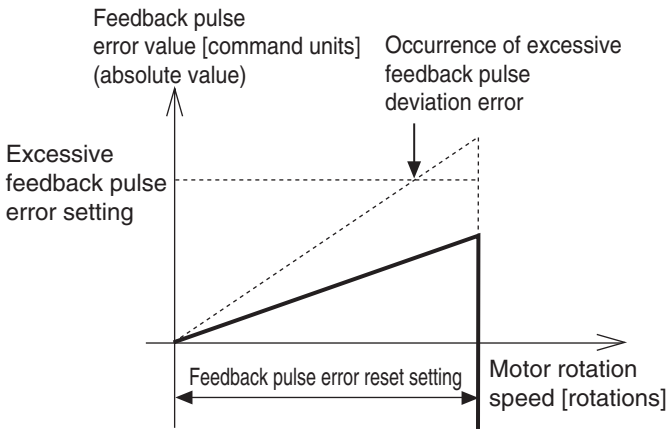

- When using feedback pulse error reset, make sure the feedback pulse error reset setting is set to a proper value. When the set value is extremely small, the protective function may not work to prevent any erroneous operation due to improper connection of the external encoder.
  Take sufficient care to ensure safety.

8-5 Interface Monitor Setting Parameters

Pn400	Input Signal Selection 1					All	
Setting range	0 to 00FFFFFFh	Unit	–	Default setting	8553090	Power OFF and ON	Yes

Pn401	Input Signal Selection 2					All	
Setting range	0 to 00FFFFFFh	Unit	–	Default setting	8487297	Power OFF and ON	Yes

Pn402	Input Signal Selection 3					All	
Setting range	0 to 00FFFFFFh	Unit	–	Default setting	9539850	Power OFF and ON	Yes

Pn403	Input Signal Selection 4					All	
Setting range	0 to 00FFFFFFh	Unit	–	Default setting	394758	Power OFF and ON	Yes

Pn404	Input Signal Selection 5					All	
Setting range	0 to 00FFFFFFh	Unit	–	Default setting	4108	Power OFF and ON	Yes

Pn405	Input Signal Selection 6					All	
Setting range	0 to 00FFFFFFh	Unit	–	Default setting	197379	Power OFF and ON	Yes

Pn406	Input Signal Selection 7					All	
Setting range	0 to 00FFFFFFh	Unit	–	Default setting	3847	Power OFF and ON	Yes

Pn407	Input Signal Selection 8					All	
Setting range	0 to 00FFFFFFh	Unit	–	Default setting	263172	Power OFF and ON	Yes

Pn408	Input Signal Selection 9					All	
Setting range	0 to 00FFFFFFh	Unit	–	Default setting	328965	Power OFF and ON	Yes

Pn409	Input Signal Selection 10					All	
Setting range	0 to 00FFFFFFh	Unit	–	Default setting	3720	Power OFF and ON	Yes

Pn410	Output Signal Selection 1					All	
Setting range	0 to 00FFFFFFh	Unit	–	Default setting	197379	Power OFF and ON	Yes

Pn411	Output Signal Selection 2					All	
Setting range	0 to 00FFFFFFh	Unit	–	Default setting	131586	Power OFF and ON	Yes

Pn412	Not used					All	
Setting range	–	Unit	–	Default setting	-	Power OFF and ON	–

Pn413	Output Signal Selection 4					All	
Setting range	0 to 00FFFFFFh	Unit	–	Default setting	328964	Power OFF and ON	Yes

♦Refer to "6-10 Sequence I/O Signal" (P.6-36)for more information on settings.

Pn416	Analog Monitor 1 Selection						All
Setting range	0 to 21	Unit	–	Default setting	0	Power OFF and ON	–

Explanation of Set Values

Set value	Explanation		
	Monitor type	Unit	Output gain when Pn417 = 0
0	Motor speed	r/min	500
1	Position command speed * 3	r/min	500
2	Internal position command speed * 3	r/min	500
3	Speed control command	r/min	500
4	Torque command	%	33
5	Position command error * 4	pulse (command units)	3,000
6	Encoder position error * 4	pulse (encoder units)	3,000
7	Fully-closed error * 4	pulse (external encoder units)	3,000
8	Hybrid Error	pulse (command units)	3,000
9	P-N voltage	V	80
10	Regeneration load ratio	%	33
11	Overload load ratio	%	33
12	Forward direction torque limit	%	33
13	Reverse direction torque limit	%	33
14	Speed limit value	r/min	500
15	Inertia ratio	%	500
16	Analog input 1 * 2	V	1
17	Analog input 2 * 2	V	1
18	Analog input 3 * 2	V	1
19	Encoder temperature	–	–
20	Drive temperature	°C	10
21	Encoder 1-rotation data * 1	pulse (encoder units)	110,000

*1. Forward and reverse directions of monitor data are the direction set in Pn000. However, CCW will be the forward direction for the absolute encoder 1-rotation data. A normal value is output from the incremental encoder after the first phase Z is input.

*2. Analog inputs 1 to 3 will output terminal voltage even when terminal is not used.

*3. Corresponding to command pulse input, command pulse speed is before command filter (position command filter time constant and smoothing filter time constant), and internal command speed is after command filter.

*4. The position command error is an error from the command pulse input, while the encoder position error or fully-closed position error is the error at the input of the position loop.

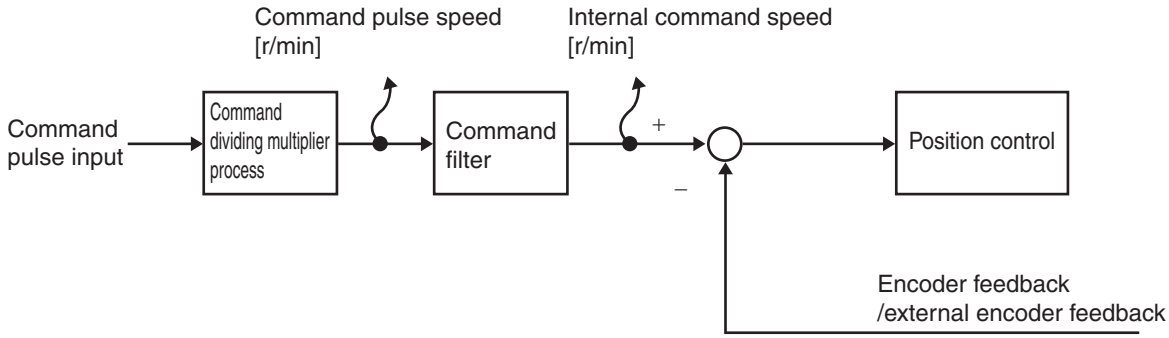

*4. Position error and feedback pulse error come in 2 types, encoder unit/external encoder unit and command unit. Encoder unit/external encoder unit will be an error of position control input section and command unit will be an error of command pulse input.

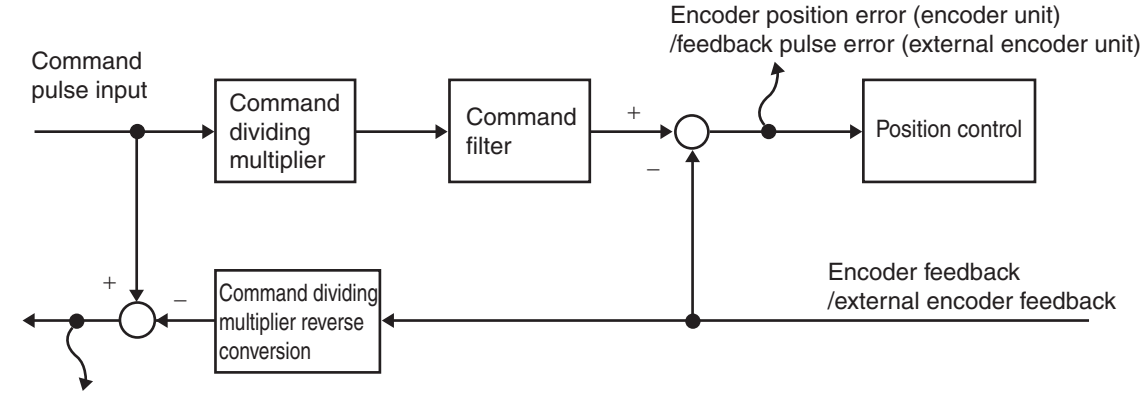

Pn417	Analog Monitor 1 Scale Setting						All
Setting range	0 to 214,748,364	Unit	Pn416 monitor unit/V	Default setting	0	Power OFF and ON	–

- Set output gain for analog monitor 1.

Pn418	Analog Monitor 2 Selection						All
Setting range	0 to 21	Unit	–	Default setting	4	Power OFF and ON	–

- Select the type of analog monitor 2.
- The set value for this parameter is same as Analog Monitor 1 Type (Pn416).

Pn419	Analog Monitor 2 Scale Setting						All
Setting range	0 to 214,748,364	Unit	Pn418 monitor unit/V	Default setting	0	Power OFF and ON	–

- Set the output gain for analog monitor 2.

Pn421	Analog Monitor Output Selection						All
Setting range	0 to 2	Unit	–	Default setting	0	Power OFF and ON	–

- Select the analog monitor output voltage direction.

Set value	Output range	Data output
0	–10 to 10 V	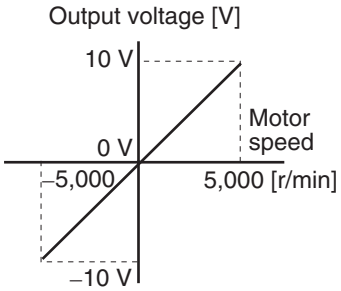
1	0 to 10 V	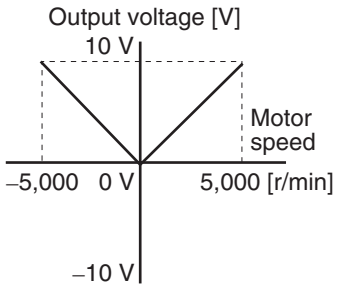
2	0 to 10 V	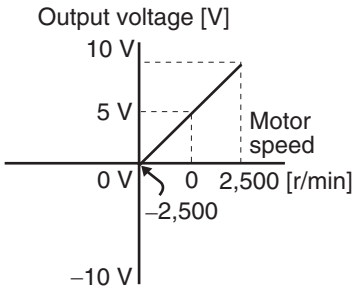

- When monitor type is motor speed and gain of conversion is 500 (1 V = 500 r/min)

Pn422	Analog Input 1 Offset						All
Setting range	–5,578 to 5,578	Unit	0.359 mV	Default setting	0	Power OFF and ON	–

- Adjust the offset of the speed command input (REF: CN1 pin 14).
- The offset amount is approx. the set value times 0.359 mV.
- There are 2 ways to adjust the offset.
  - Manual adjustment
  - Automatic adjustment
- The manual adjustment is as follows:
  - To adjust the offset for individual drives, accurately input 0 V to the speed command input/torque command input (REF/TREF1) (or connect to the signal ground), and then set this parameter so that the motor does not rotate.
  - If you use a position loop in the host device, set this parameter so that there are no accumulated pulses at servo lock stop status.
- The automatic adjustment is as follows:
  This parameter will be automatically set when automatic offset adjustment is executed. Refer to "Analog Input Automatic Offset Adjustment" (P.9-26) for the automatic offset adjustment method.

Pn423	Analog Input 1 Filter Time Constant					All	
Setting range	0 to 6,400	Unit	0.01 ms	Default setting	0	Power OFF and ON	–

- Set the first-order lag filter time constant in the speed command input (REF: CN1 pin 14).

Pn424	Excessive Analog Input 1					All	
Setting range	0 to 100	Unit	0.1 V	Default setting	0	Power OFF and ON	–

- Set the overflow level for speed command input (REF: CN1 pin 14) or torque command input (TREF1: CN1 pin 14) using voltage after offset compensation.
- Excessive analog input (Alarm No. 39) will be disabled if this parameter is set to 0.

Pn425	Analog Input 2 Offset					All	
Setting range	–342 to 342	Unit	5.86 mV	Default setting	0	Power OFF and ON	–

- Adjust the offset of the speed command input (REF: CN1 pin 14).
- The offset amount is approx. the set value times 5.86 mV.
- There are 2 ways to adjust the offset.
  - Manual adjustment
  - Automatic adjustment
- The manual adjustment is as follows:
  - To adjust the offset for individual drives, accurately input 0 V to the speed command input/ torque command input (REF/TREF1) (or connect to the signal ground), and then set this parameter so that the motor does not rotate.
  - If you use a position loop in the host device, set this parameter so that there are no accumulated pulses at servo lock stop status.
- The automatic adjustment is as follows:
  This parameter will be automatically set when automatic offset adjustment is executed. Refer to "Analog Input Automatic Offset Adjustment" (P.9-26) for the automatic offset adjustment method.

Pn426	Analog Input 2 Filter Time Constant					All	
Setting range	0 to 6,400	Unit	0.01 ms	Default setting	0	Power OFF and ON	–

- Set the first-order lag filter time constant in the speed command input (REF: CN1 pin 14).

Pn427	Excessive Analog Input 2					All	
Setting range	0 to 100	Unit	0.1 V	Default setting	0	Power OFF and ON	–

- Set the overflow level for speed command input (REF: CN1 pin 14) or torque command input (TREF1: CN1 pin 14) using voltage after offset compensation.
- Excessive analog input (Alarm No. 39) will be disabled if this parameter is set to 0.

Pn428	Analog Input 3 Offset					All	
Setting range	–342 to 342	Unit	5.86 mV	Default setting	0	Power OFF and ON	–

- Adjust the offset of the speed command input (REF: CN1 pin 14).
- The offset amount is approx. the set value times 5 mV.
- There are 2 ways to adjust the offset.
  - Manual adjustment
  - Automatic adjustment
- The manual adjustment is as follows:
  - To adjust the offset for individual drives, accurately input 0 V to the speed command input/ torque command input (REF/TREF1) (or connect to the signal ground), and then set this parameter so that the motor does not rotate.
  - If you use a position loop in the host device, set this parameter so that there are no accumulated pulses at servo lock stop status.
- The automatic adjustment is as follows:
  This parameter will be automatically set when automatic offset adjustment is executed. Refer to "Analog Input Automatic Offset Adjustment" (P.9-26) for the automatic offset adjustment method.

Pn429	Analog Input 3 Filter Time Constant					All	
Setting range	0 to 6,400	Unit	0.01 ms	Default setting	0	Power OFF and ON	–

- Set the first-order lag filter time constant in the speed command input (REF: CN1 pin 14).

Pn430	Excessive Analog Input 3					All	
Setting range	0 to 100	Unit	0.1 V	Default setting	0	Power OFF and ON	–

- Set the overflow level for speed command input (REF: CN1 pin 14) or torque command input (TREF1: CN1 pin 14) using voltage after offset compensation.
- Excessive analog input (Alarm No. 39) will be disabled if this parameter is set to 0.

Pn431	Positioning Completion Range 1					Position	Fully-closed
Setting range	0 to 262,144	Unit	Command unit	Default setting	10	Power OFF and ON	–

- Use this parameter in combination with the Positioning Completion Condition Selection (Pn432) to set the timing to output the positioning completion output (INP1). The positioning completion output (INP) will output when the Servomotor (workpiece) movement stops and the number of the accumulated pulses in the error counter is within the set value of this parameter, after command pulse input is completed.
- Unit for setting is command unit, but it can be changed to encoder unit with Position Setting Unit Selection (Pn520). However, note that the unit for error counter overflow level will be changed as well.
- If this parameter is set to a very small value, the time required for the INP signal to be output will increase and the chattering may occur during output. The setting of the positioning completion range does not affect the precision of the final positioning.

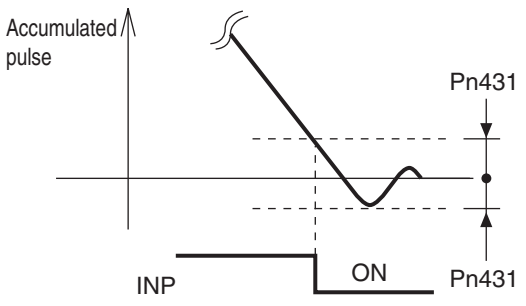

Pn432	Positioning Completion Condition Selection					Position Fully-closed	
Setting range	0 to 3	Unit	–	Default setting	0	Power OFF and ON	–

Explanation of Set Values

Set value	Description
0	Positioning completion output (INP1) turns ON when the position error is within the Positioning Completion Range 1 (Pn431).
1	Positioning completion output turns ON when the position error is within the Positioning Completion Range 1 (Pn431) and there is no position command.
2	Positioning completion output (INP1) turns ON when the zero speed detection output (ZSP) is ON, the position error is within the Positioning Completion Range 1 (Pn431), and there is no position command.
3	Positioning completion output turns ON when the position error is within the Positioning Completion Range 1 (Pn431) and there is no position command. The ON status is then held until the Positioning Completion Hold Time (Pn433) elapses. After that, if turns ON or OFF based on the position error at the time.

- Use this in combination with the Positioning Completion Range 1 (Pn431) to set the operation for positioning completion output (INP: CN1 pin 39).

Pn433	Positioning Completion Hold Time					Position Fully-closed	
Setting range	0 to 30,000	Unit	1 ms	Default setting	0	Power OFF and ON	–

- When Positioning Completion Hold Time (Pn433) is set to 0, hold time becomes infinite and ON status is held until the next position command comes in.

Pn434	Zero Speed Detection					All	
Setting range	10 to 20,000	Unit	r/min	Default setting	50	Power OFF and ON	–

- General-purpose output timing is set by rotation speed r/min.
- General-purpose output 1 (ZSP) will be turned ON when the speed of the motor is lower than the setting of this parameter.
- The set value in this parameter is valid in both forward and reverse directions, regardless of the actual motor rotation direction. The setting has a hysteresis of 10 r/min.

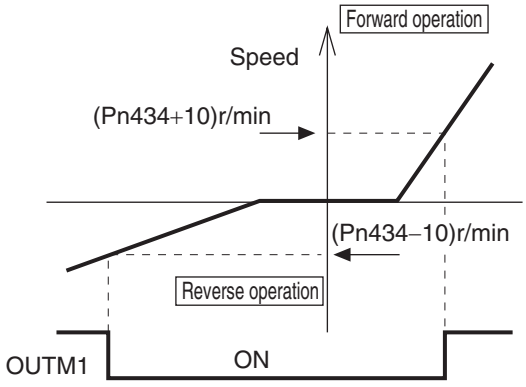

Pn435	Speed Conformity Detection Range						Speed
Setting range	10 to 20,000	Unit	r/min	Default setting	50	Power OFF and ON	–

- When speed command and motor speed are identical, speed conformity output signal is output.
- This setting has a hysteresis of 10 r/min for detection.

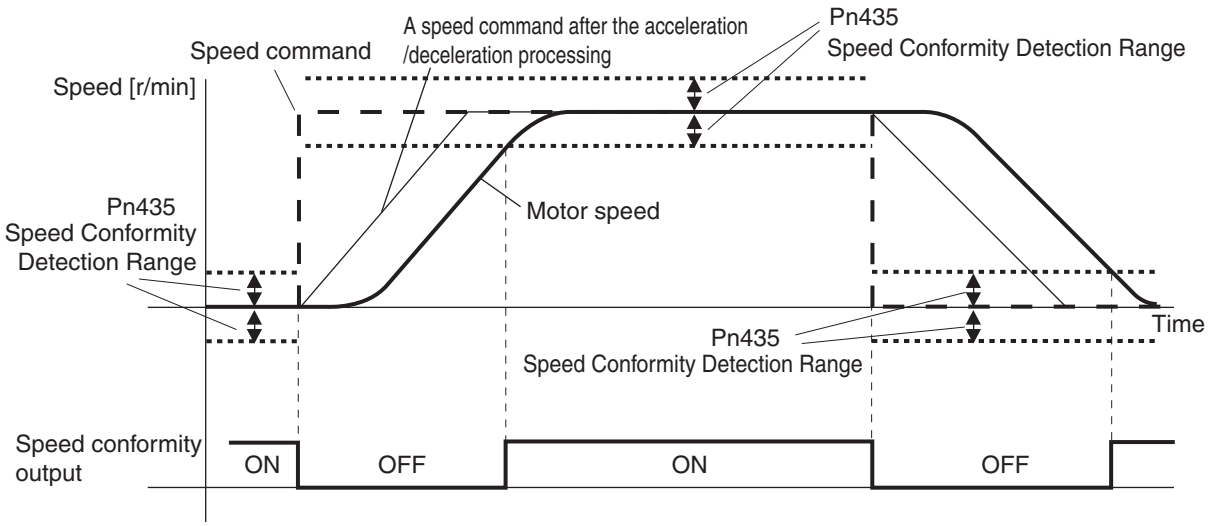

Pn436	Rotation Speed for Motor Rotation Detection						Speed
Setting range	10 to 20,000	Unit	r/min	Default setting	1000	Power OFF and ON	–

- Motor rotation speed detection output signal is output when the motor speed reaches the speed set as the achieved speed.
- This setting has a hysteresis of 10 r/min for detection.

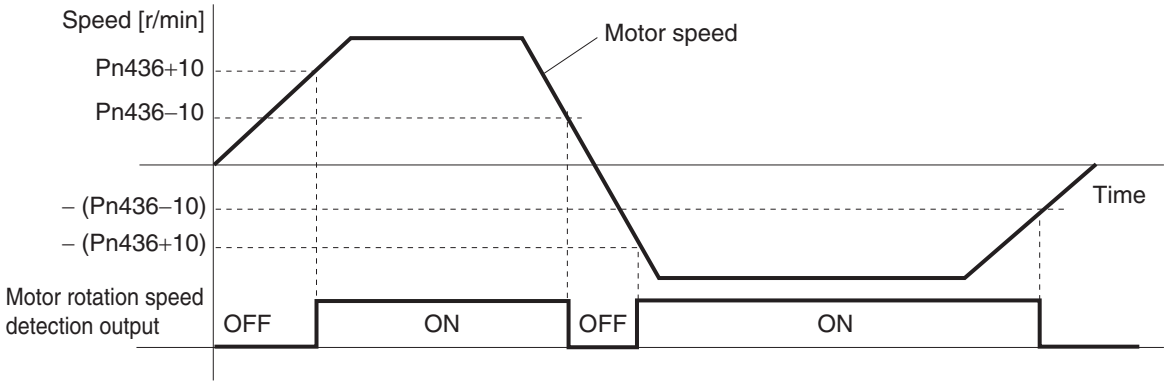

Pn437	Brake Timing when Stopped					All	
Setting range	0 to 10,000	Unit	1 ms	Default setting	0	Power OFF and ON	–

- Set the time required for the Servomotor to be de-energized (servo free) after the brake interlock output (BKIR: CN1 pin 10) turns OFF (i.e., brake held), when servo OFF status is entered while the Servomotor is stopped.
- When the Servomotor is stopped and the operation command (RUN) is turned OFF, the brake interlock signal (BKIR) will turn OFF, and the Servomotor will be de-energized after waiting for the setting time (set value × ms).

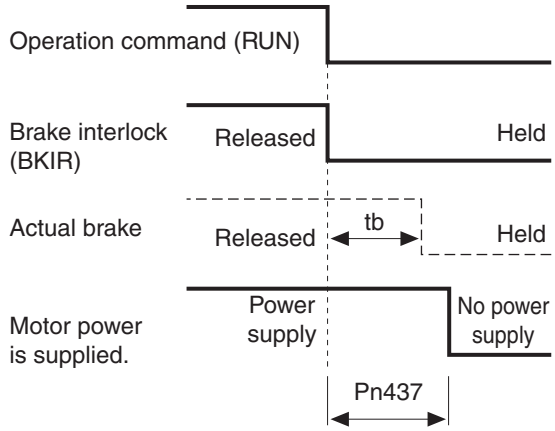

- Make the setting as follows to prevent the machine (workpiece) from moving or falling due to the delay time in the brake operation (tb).

  Brake timing when stopped (set value × 1 ms) ≥ tb

- For details, refer to "6-6 Brake Interlock" (P.6-18).

Pn438	Brake Timing during Operation					All	
Setting range	0 to 10,000	Unit	1 ms	Default setting	0	Power OFF and ON	–

- Set the required time for the brake interlock output (BKIR: CN1 pin 10) to turn OFF after the operation command (RUN: CN1 pin 29) is detected to be OFF when servo OFF status is entered while the Servomotor is operating. When the operation command (RUN) is turned OFF while the motor is operating, the motor will decelerate to reduce speed, and the brake interlock signal (BKIR) will turn ON after the setting time (set value × 1 ms) has elapsed.

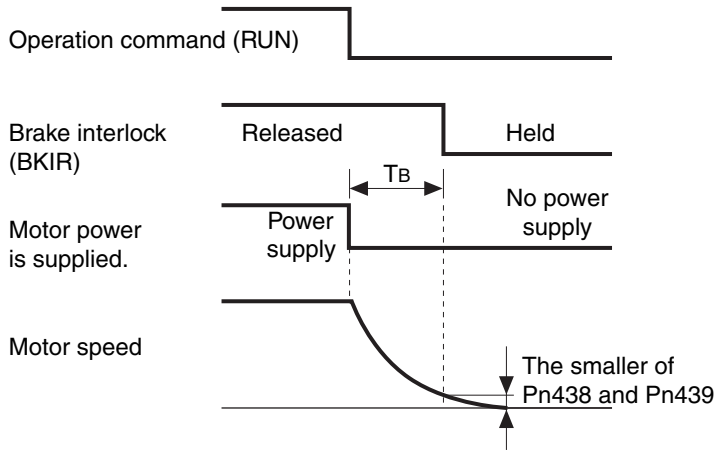

- "TB" in the above figure is the Brake Timing during Operation (Pn438) (set value × 1 ms) or the time until the motor rotation speed falls to the speed set for the Brake Clear Speed Setting during Operation (Pn439) or lower, whichever is shorter.
- For details, refer to "6-6 Brake Interlock" (P.6-18).

Pn439	Brake Clear Speed Setting						All
Setting range	30 to 3,000	Unit	r/min	Default setting	30	Power OFF and ON	–

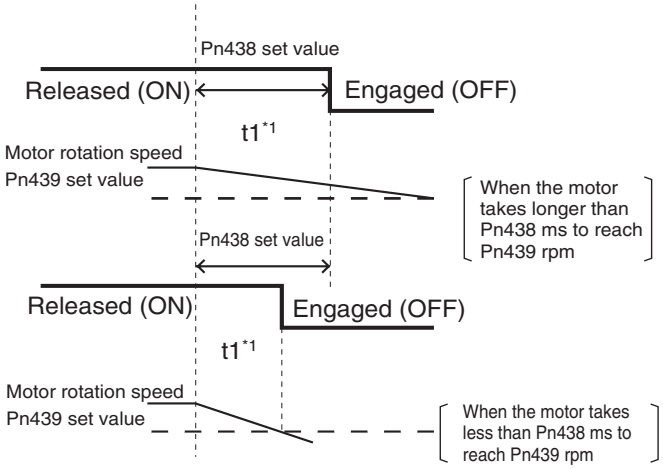

Pn440	Warning Output Selection 1						All
Setting range	0 to 10	Unit	–	Default setting	0	Power OFF and ON	–

Explanation of Set Values

Set value	Description
0	An OR output of all alarm status
1	Overload warning
2	Excessive regeneration warning
3	Battery warning
4	Fan warning
5	Encoder communications warning
6	Encoder overheating warning
7	Vibration detection warning
8	Service life detection warning
9	External encoder error warning
10	External encoder communications error warning

♦ Refer to "11-2 Warning List" (P.11-4) for more information on settings.

Pn441	Warning Output Selection 2						All
Setting range	0 to 7	Unit	–	Default setting	0	Power OFF and ON	–

♦ The set values for this parameter are same as Warning Output Selection 1 (Pn440).

Pn442	Positioning Completion Range 2					Position Fully-closed	
Setting range	0 to 262,144	Unit	Command unit	Default setting	10	Power OFF and ON	–

- Set the positioning completion range.
- The set values for this parameter are same as Positioning Completion Range 1 (Pn431).

8-6 Extended Parameters

Pn500	Electronic Gear Ratio Numerator 2						Position
Setting range	0 to 2^{30}	Unit	–	Default setting	0	Power OFF and ON	–

Pn501	Electronic Gear Ratio Numerator 3						Position
Setting range	0 to 2^{30}	Unit	–	Default setting	0	Power OFF and ON	–

Pn502	Electronic Gear Ratio Numerator 4						Position
Setting range	0 to 2^{30}	Unit	–	Default setting	0	Power OFF and ON	–

Pn503	Encoder Dividing Denominator						All
Setting range	0 to 262,144	Unit	–	Default setting	0	Power OFF and ON	Yes

- If encoder dividing denominator ≠ 0, division is performed at the rate according to the formula below.

$$\text{Encoder FB pulse} \rightarrow \boxed{\frac{\text{Pn011}}{\text{Pn503}}} \rightarrow \text{Output pulse}$$

- Therefore, the formula will be as follows when the host side counts pulses through processing with quadruple multiplier.
- Number of pulse output resolution per rotation = $\frac{\text{Pn011}}{\text{Pn053}} \times$ Encoder resolution
- The pulse output resolution per rotation will never exceed the encoder resolution. (If the above settings are used, the pulse output resolution per rotation will be equal to the encoder resolution.)
- 1 phase-Z signal is output for each rotation of the motor.
- If the pulse output resolution per rotation from the above equation is a multiple of 4, phases Z and A are output in synchronization. In all other cases, the output width of phase Z will be output as the encoder resolution, resulting to be narrower than phase A. Accordingly, phases A and Z will not be synchronized.

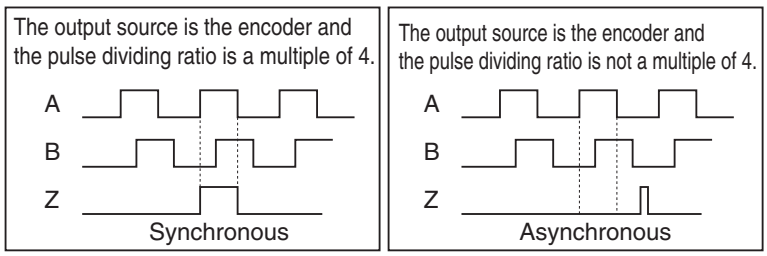

Pn504	Drive Prohibition Input Selection					All	
Setting range	0 to 2	Unit	–	Default setting	1	Power OFF and ON	Yes

Explanation of Set Values

Set value	Description
0	Forward drive prohibition input and reverse drive prohibition input enabled.
1	Forward drive prohibition input and reverse drive prohibition input disabled.
2	Forward drive prohibition input and reverse drive prohibition input enabled.

- Install limit switches at both ends of the axis to prohibit the motor from traveling in the direction where one of the switches operates. This can be used to prevent the workpiece from traveling too far and thus prevent damage to the machine.
- Operation will be as follows if 0 is set.
  - Forward drive prohibition input (POT: CN1 pin 9) and COM connected: Normal status when the forward limit switch does not operate
  - Forward drive prohibition input (POT: CN1 pin 9) and COM open: Forward direction prohibited and reverse direction permitted
  - Reverse drive prohibition input (NOT: CN1 pin 8) and COM connected: Normal status when the reverse limit switch does not operate
  - Reverse drive prohibition input (NOT: CN1 pin 8) and COM open: Reverse direction prohibited and forward direction permitted.
- If this parameter is set to 0, the Servomotor will decelerate and stop according to the sequence set in the Stop Selection for Drive Prohibition Input (Pn505) For details, refer to explanation for Stop Selection for Drive Prohibition Input (Pn505).
- If this parameter is set to 0 and the forward and reverse prohibition inputs are both open, a drive prohibition input error (Alarm No.38) occurs because it is taken that Servo Drive is in error condition.
- If this parameter is set to 2, a drive prohibition input error (Alarm No. 38) will occur when the connection between either the forward or reverse prohibition input and COM is open.
- If a limit switch above the workpiece is turned OFF when using a vertical axis, the upward torque will be eliminated, and there may be repeated vertical movement of the workpiece. If this occurs, set the Stop Selection for Drive Prohibition Input (Pn505) to 2 or perform limit processing using the Host Controller rather than using this function.

Pn505	Stop Selection for Drive Prohibition Input					All	
Setting range	0 to 2	Unit	–	Default setting	0	Power OFF and ON	Yes

Explanation of Set Values

Set value	Description
0	During deceleration: Dynamic brake operation After stop: Torque command is 0 for drive prohibition direction Error counter: Held
1	During deceleration: Torque command is 0 for drive prohibition direction After stop: Torque command is 0 for drive prohibition direction Error counter: Held
2	During deceleration: Immediate stop After stop: Torque command is 0 for drive prohibition direction Error counter: Clear before and after deceleration

- Set the drive conditions during deceleration or after stopping after the drive prohibition input (POT: CN1 pin 9 or NOT: CN1 pin 8) is enabled.
- If this is set to 2, the Immediate Stop Torque (Pn511) will be used to torque limit during deceleration.

Pn506	Stop Selection with Servo OFF					All	
Setting range	0 to 9	Unit	–	Default setting	0	Power OFF and ON	–

Explanation of Set Values

Set value	Explanation		
	During deceleration * 3	After stopping	Error counter
0	Dynamic brake operation	Dynamic brake operation	Clear * 4
1	Free-run	Dynamic brake operation	Clear * 4
2	Dynamic brake operation	Servo free	Clear * 4
3	Free-run	Servo free	Clear * 4
4	Dynamic brake operation	Dynamic brake operation	Hold * 2
5	Free-run	Dynamic brake operation	Hold * 2
6	Dynamic brake operation	Servo free	Hold * 2
7	Free-run	Servo free	Hold * 2
8	Immediate stop * 1	Dynamic brake operation	Clear * 4
9	Immediate stop * 1	Servo free	Clear * 4

- If an alarm occurs when servo is turned OFF, the operation will be based on the Stop Selection for Alarm Detection (Pn510). Additionally, if the main power supply is turned OFF when servo is OFF, it will be based on the Stop Selection with Main Power Supply OFF (Pn507).

*1. Emergency stop refers to an immediate stop operation applying control while servo is still ON and stopping the operation immediately.
At that time, the torque command value is restricted by the Immediate Stop Torque (Pn511).

*2. If the position command is given or the motor runs continuously when servo is turned OFF, the position error accumulates and Alarm 24.0, "error counter overflow," may occur. In addition, if servo is turned ON when the position error or external encoder error is a large value, the motor may operate abruptly to perform a control operation to bring the error to 0. Take sufficient care when using while holding the position error or external encoder error.

*3. Decelerating is the time between when the motor is running and when the motor speed reaches 30 r/min or less. Once the motor reaches 30 r/min or less and moves to the after-stop status, subsequent operation is based on the after-stop status regardless of the motor speed.

*4. The position error or external encoder error will always be cleared to 0.

Pn507	Stop Selection with Main Power Supply OFF					All	
Setting range	0 to 9	Unit	–	Default setting	0	Power OFF and ON	–

Explanation of Set Values

Set value	Explanation		
	During deceleration * 3	After stopping	Error counter
0	Dynamic brake operation	Dynamic brake operation	Clear * 4
1	Free-run	Dynamic brake operation	Clear * 4
2	Dynamic brake operation	Servo free	Clear * 4
3	Free-run	Servo free	Clear * 4
4	Dynamic brake operation	Dynamic brake operation	Hold * 2
5	Free-run	Dynamic brake operation	Hold * 2
6	Dynamic brake operation	Servo free	Hold * 2
7	Free-run	Servo free	Hold * 2
8	Immediate stop * 1	Dynamic brake operation	Clear * 4
9	Immediate stop * 1	Servo free	Clear * 4

- If an alarm occurs when the main power supply is turned OFF, the operation will be based on the Stop Selection for Alarm Detection (Pn510). If the main power supply is turned OFF when Servo is ON, and if the Undervoltage Alarm Selection (Pn508) is set to 1, Alarm 13.1, "main power supply undervoltage (AC cut-off detection)," will occur. Follow the Stop Selection for Alarm Detection (Pn510).

*1. Emergency stop refers to an immediate stop operation applying control while servo is still ON and stopping the operation immediately.
At that time, the torque command value is restricted by the Immediate Stop Torque (Pn511).

*2. If the position command is given or the motor runs continuously when the main power supply is turned OFF, the position error accumulates and Alarm 24.0, "error counter overflow," may occur. In addition, if servo is turned ON when the position error or external encoder error is a large value, the motor may operate abruptly to perform a control operation to bring the error to 0. Take sufficient care when using while holding the position error or external encoder error.

*3. Decelerating is the time between when the motor is running and when the motor speed reaches 30 r/min or less. Once the motor reaches 30 r/min or less and moves to the after-stop status, subsequent operation is based on the after-stop status regardless of the motor speed.

*4. The position error or external encoder error will always be cleared to 0.

Pn508	Undervoltage Alarm Selection					All	
Setting range	0 or 1	Unit	–	Default setting	1	Power OFF and ON	–

Explanation of Set Values

Set value	Description
0	The servo is turned OFF based on the setting of the Stop Selection with Main Power Supply OFF (Pn507) and turn it back to servo ON state by turning ON the main power supply.
1	Alarm 13.1 "main power supply undervoltage" will occur and a trip will be caused.

Pn509	Momentary Hold Time					All	
Setting range	70 to 2,000	Unit	1 ms	Default setting	70	Power OFF and ON	Yes

- Set main power supply alarm detection time.
- The main power supply OFF detection will be disabled if this is set to 2,000.

Pn510	Stop Selection for Alarm Detection						All
Setting range	0 to 7	Unit	–	Default setting	0	Power OFF and ON	–

Explanation of Set Values

Set value	Explanation		
	During deceleration * 3	After stopping	Error counter
0	Dynamic brake operation	Dynamic brake operation	Clear * 1
1	Free-run	Dynamic brake operation	Clear * 1
2	Dynamic brake operation	Servo free	Clear * 1
3	Free-run	Servo free	Clear * 1
4	Operation A: Immediate stop * 2 Operation B: Dynamic brake operation	Dynamic brake operation	Clear * 1
5	Operation A: Immediate stop * 2 Operation B: Free-run	Dynamic brake operation	Clear * 1
6	Operation A: Immediate stop * 2 Operation B: Dynamic brake operation	Servo free	Clear * 1
7	Operation A: Immediate stop * 2 Operation B: Free-run	Servo free	Clear * 1

- Set the operation to be performed after stopping or during deceleration when any protective function of the drive operates and an alarm occurs.

*1. The error counter is cleared when an alarm is reset.

*2. Operations A and B indicate whether immediate stop takes place upon alarm generation. If an immediate stop alarm is generated, immediate stop in operation A is executed.
If an alarm that does not support immediate stop is generated, immediate stop in operation B will take place.

*3. Decelerating is the time between when the motor is running and when the motor speed reaches 30 r/min or less. Once the motor reaches 30 r/min or less and moves to the after-stop status, subsequent operation is based on the after-stop status regardless of the motor speed.

Immediate Stop Operation when an Alarm that Supports Immediate Stop is Generated

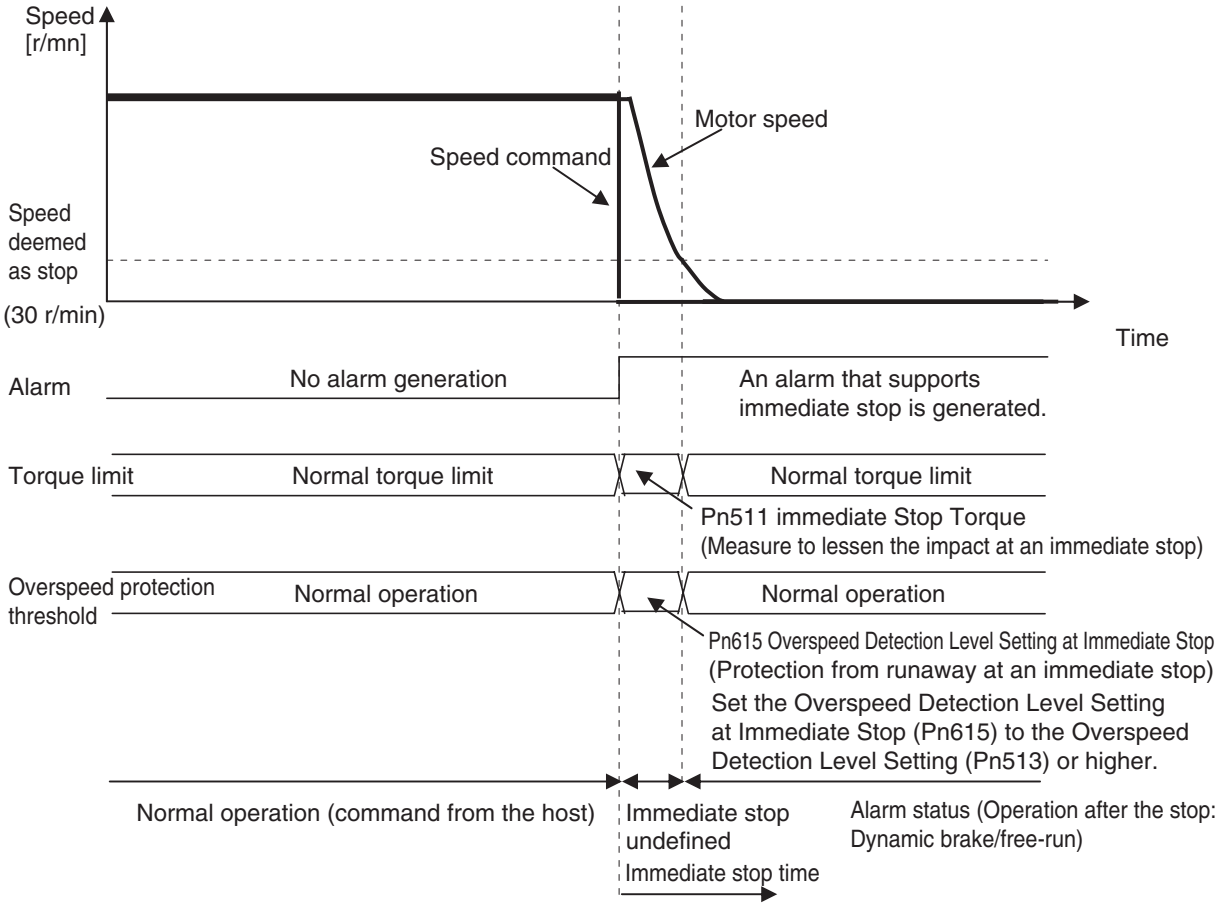

- If the actual speed is not 30 r/min or less after the time set by the Alarm Detection Allowable Time Setting (Pn614) elapses, an immediate alarm status will occur. In addition, if an alarm that does not support immediate stop occurs inside the drive at immediate stop, an immediate alarm status will occur.
- Set the allowable overspeed level to Pn615, "Overspeed Detection Level Setting at Immediate Stop," as a protective measure against runaway at an immediate stop. Alarm 26.1, "overspeed 2," if it occurs, will cause an immediate alarm trip because it is an alarm that does not support immediate stop. However, if the setting is below Pn513, "Overspeed Detection Level Setting," an immediate stop will not take place because Alarm 26.1, "overspeed 2," will occur before Alarm 26.0, "overspeed."
  In addition, if Alarm 26.0 and Alarm 26.1 are detected at the same time, Alarm 26.0 will be displayed. However, an immediate stop will not take place because Alarm 26.1 has also occurred internally.

Pn511	Immediate Stop Torque						All
Setting range	0 to 500	Unit	%	Default setting	0	Power OFF and ON	–

- Set the torque limit for the following cases.
  - Drive prohibition deceleration with the Stop Selection for Drive Prohibition Input (Pn505) set to 2.
  - Deceleration with the Stop Selection with Main Power Supply OFF (Pn507) set to 8 or 9.
  - Deceleration with the Stop Selection with Servo OFF (Pn506) set to 8 or 9.
- The normal torque limit will be used if this parameter is set to 0.

Pn512	Overload Detection Level Setting						All
Setting range	0 to 500	Unit	%	Default setting	0	Power OFF and ON	–

- Set the overload detection level.
- If this setting is 0, the level is set to 115% of nominal torque
- Internally there is a limit of 115%, so higher values are limited to 115%

Pn513	Overspeed Detection Level Setting					All	
Setting range	0 to 20,000	Unit	r/min	Default setting	0	Power OFF and ON	–

- Set the overspeed detection level.
- The overspeed detection level setting is 1.2 times the maximum motor rotation speed if this parameter is set to 0.
- This parameter should normally be set to 0. The setting should be changed only when it is necessary to lower the overspeed detection level.
- The set value of this parameter is limited to 1.2 times the maximum motor rotation speed.
- The detection margin of error for the set value is ±3 r/min for 17 bit absolute encoder and ±36 r/min for a 20 bit incremental encoder

Pn514	Overrun Limit Setting					Position Fully-closed	
Setting range	0 to 1,000	Unit	0.1 rotation	Default setting	10	Power OFF and ON	–

- Set the allowable operating range for the position command input range.
- If the set value is exceeded, motor operation range setting protection is activated.

When position command is not input

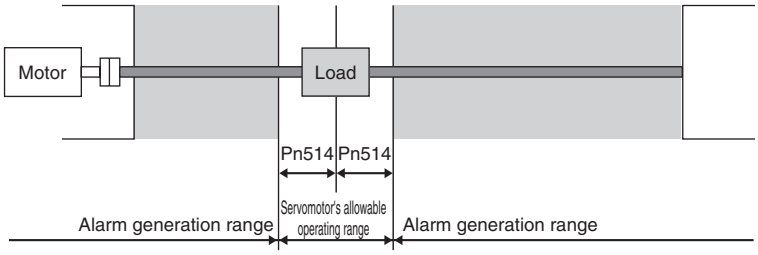

When position command is input

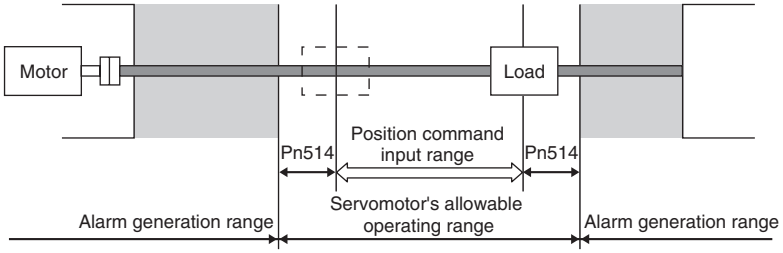

Pn515	Control Input Signal Read Setting					All	
Setting range	0 to 3	Unit	–	Default setting	0	Power OFF and ON	Yes

Explanation of Set Values

Set value	Description
0	0.166 ms
1	0.333 ms
2	1 ms
3	1.666 ms

- Select the signal read cycle for control input (digital input).

Pn516	Alarm Reset Condition Selection					All	
Setting range	0 or 1	Unit	–	Default setting	0	Power OFF and ON	Yes

Explanation of Set Values

Set value	Description
0	120 ms
1	Follow the Control Input Signal Read Setting (Pn515).

- Select the signal confirmation time for alarm reset input signal (RESET).

Pn517	Error Counter Reset Condition Selection					Position Fully-closed	
Setting range	0 to 4	Unit	–	Default setting	3	Power OFF and ON	–

Explanation of Set Values

Set value	Description
0	Disabled
1	Clears the error counter at level when the signal is shorted for 500 μs or longer.
2	Clears the error counter at level when the signal is shorted for 1 ms or longer.
3	Clears the error counter at edge when the signal changes from open to shorted for 100 μs or longer.
4	Clears the error counter at edge when the signal changes from open to shorted for 1 ms or longer.

- When set to 1 or 2, the minimum time width will be as follows.

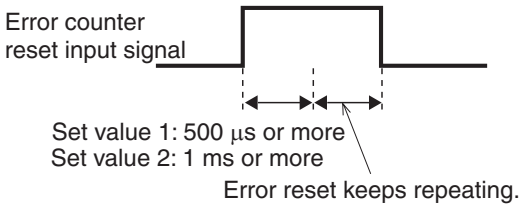

- When set to 3 or 4, the minimum time width will be as follows.

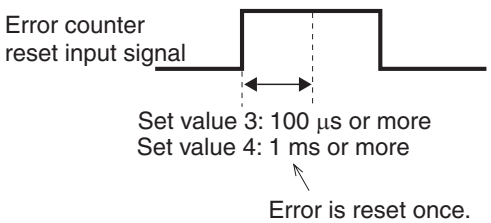

Pn518	Command Pulse Prohibition Input Setting					Position Fully-closed	
Setting range	0 or 1	Unit	–	Default setting	1	Power OFF and ON	–

Explanation of Set Values

Set value	Description
0	Enabled
1	Disabled

- Enable or disable the pulse prohibition input signal (IPG).
  When command pulse prohibition input is enabled, command pulse input count process is force stopped.

Pn519	Command Pulse Prohibition Input Read Setting					Position Fully-closed	
Setting range	0 to 3	Unit	–	Default setting	0	Power OFF and ON	Yes

Explanation of Set Values

Set value	Description
0	0.166 ms
1	0.333 ms
2	1 ms
3	1.666 ms
4	0.166 ms (No judgment of multiple matches)

- Select the signal read cycle for the pulse prohibition input signal (IPG).
- The signal status is updated when the signal status in each signal read cycle that has been set matches multiple times.
- You can lower the possibility of incorrect operation caused by noise by extending the signal read cycle. However, the responsiveness to signal inputs will be reduced.

Pn520	Position Setting Unit Selection					Position Fully-closed	
Setting range	0 or 1	Unit	–	Default setting	0	Power OFF and ON	Yes

Explanation of Set Values

Set value	Description
0	Command units
1	Encoder units

- Select the setting unit of Positioning Completion Range 1 and 2 (Pn431 and Pn442), and Error Counter Overflow Level (Pn014).

Pn521	Torque Limit Selection				Position Speed Fully-closed		
Setting range	0 to 6	Unit	–	Default setting	1	Power OFF and ON	–

Explanation of Set Values

Torque Limit Selection (Pn521)	Torque limit switching input (TLSEL)	Torque Limit Switching Setting (Pn523 and 524)	Forward direction analog limit input (PCL)	Reverse direction analog torque limit input (NCL)	Forward direction torque limit	Reverse direction torque limit
0			0 to 10 V	-10 to 0 V	PCL	NCL
1	–	–			Pn013	
2	–	–			Pn013	Pn522
3	OFF	Enabled			Pn013	
	ON	Enabled			Pn522	
4			0 to 10 V	0 to 10 V	PCL	NCL
5			0 to 10 V	Not affected	PCL	NCL
6	OFF	–			Pn013	Pn522
	ON	–			Pn525	Pn526

- Select the method to set the forward and reverse torque limits.
- If this parameter is set to 1, the forward and reverse torque limit input will be limited by the No. 1 Torque Limit (Pn013).
- When using torque control, the No. 1 Torque Limit (Pn013) will be the limit value for forward and reverse operation regardless of the setting of this parameter.

Pn522	No. 2 Torque Limit				Position Speed Fully-closed		
Setting range	0 to 500	Unit	%	Default setting	500	Power OFF and ON	–

- Set the limit value for the output torque (Pn013: No. 1 Torque Limit, Pn522: No. 2 Torque Limit) of the motor.
- Refer to information on the Torque Limit Selection (Pn521) to select the torque limits.
- During torque control, maximum torques for both forward and reverse directions are limited. Settings in Torque Limit Selection (Pn521) and No. 2 Torque Limit (Pn522) will be ignored.
- Make the settings as a percentage of the rated torque. [Example] Maximum torque is limited to 150%

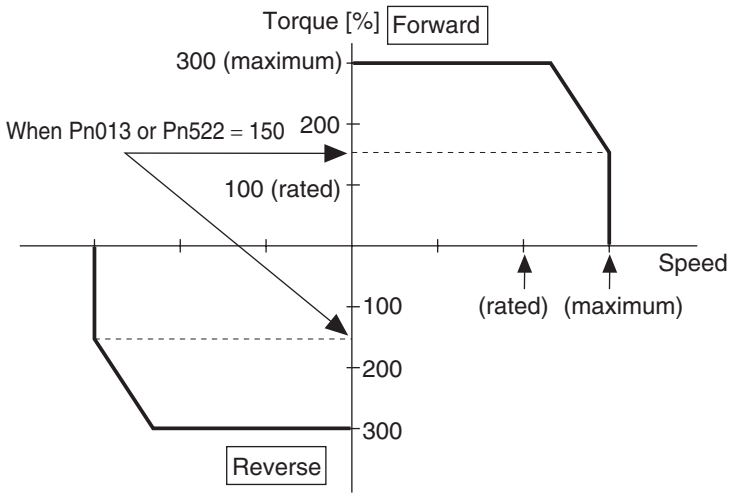

- Refer to "5-3 Torque Control" (P.5-14) for more information on torque limits and the torque limit selection.

Pn523	Torque Limit Switching Setting 1					Position Speed Fully-closed	
Setting range	0 to 4,000	Unit	ms/100%	Default setting	0	Power OFF and ON	–

- Set the rate of change from torque limit 1 to torque limit 2
- When set to 0, switching takes place immediately.

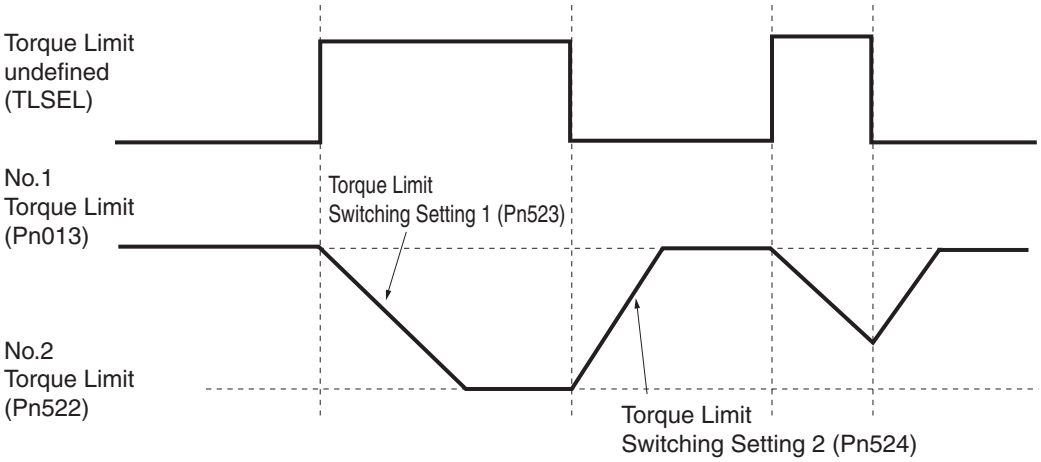

Pn524	Torque Limit Switching Setting 2					Position Speed Fully-closed	
Setting range	0 to 4,000	Unit	ms/100%	Default setting	0	Power OFF and ON	–

- Set values for this parameter are same as those for Torque Limit Switching Setting 1 (Pn523).
- Set the rate of change from torque limit 2 to torque limit 1

Pn525	Forward External Torque Limit					Position Speed Fully-closed	
Setting range	0 to 500	Unit	%	Default setting	500	Power OFF and ON	–

- Set the forward external torque limit for the torque limit switching input.

Pn526	Reverse External Torque Limit					Position Speed Fully-closed	
Setting range	0 to 500	Unit	%	Default setting	500	Power OFF and ON	–

- Set the reverse external torque limit for the torque limit switching input.

Pn527	Analog Torque Limit Scale					Position Speed Fully-closed	
Setting range	10 to 100	Unit	0.1 V/100%	Default setting	30	Power OFF and ON	–

- Set the gain for conversion for the analog torque limit input.

Pn528	Default Display					All	
Setting range	0 to 35	Unit	–	Default setting	1	Power OFF and ON	Yes

Explanation of Set Values

Set value	Description
0	Position command error
1	Motor speed

Set value	Description
2	Position command speed
3	Speed control command
4	Torque command
5	Total encoder pulses
6	Total command pulses
8	Total external encoder feedback pulses
9	Control mode
10	I/O signal status
11	Analog input value
12	Alarm factor, history
13	Warning number
14	Regeneration resistance load ratio
15	Overload load ratio
16	Inertia ratio
17	Reason for no rotation
18	Display of the number of I/O signal changes
20	Absolute encoder data
21	Absolute external encoder position
22	Monitor for the number of encoder communications errors
23	Display of axis numbers for communication
24	Position error (encoder unit)
25	External encoder error (external encoder unit)
26	Hybrid error
27	P-N voltage
28	Soft version
29	Drive serial number
30	Motor serial number
31	Accumulative operation time
32	Automatic motor recognition function
33	Temperature information
35	Safety status monitor

- Select the data to be displayed on the 7-segment LED on the front panel after the power supply is turned ON.
- For information on the display, refer to "9-4 Setting the Mode" (P.9-7).

Pn531	Axis Number					All	
Setting range	0 to 127	Unit	–	Default setting	1	Power OFF and ON	Yes

- Set the axis number for communication.

Pn532	Command Pulse Input Maximum Setting					Position Fully-closed	
Setting range	250 to 4,000	Unit	kpps	Default setting	4000	Power OFF and ON	Yes

- Set the maximum command pulse input.
- Err27.0 occurs if frequency exceeds this range

Pn533	Pulse Regeneration Output Limit Setting					All	
Setting range	0 or 1	Unit	–	Default setting	0	Power OFF and ON	Yes

Explanation of Set Values

Set value	Description
0	Error detection disabled
1	Error detection enabled

♦Set the detection of Alarm 28.0 "pulse regeneration error".

Pn535	Front Key Protection Setting					All	
Setting range	0 or 1	Unit	–	Default setting	0	Power OFF and ON	Yes

Explanation of Set Values

Set value	Description
0	Front panel operation not blocked
1	Front panel operation blocked

♦ Set the operation limitation from the front panel.

♦ The operation limits depend on the mode. The operation limits are as follows.

Mode	Operation limits
Monitor Mode	All monitor data can be checked.
Parameter Setting Mode	Parameters cannot be changed. However, parameter set values can be checked.
EEPROM Write Mode	Cannot be executed. (Will not be displayed)
Auxiliary Function Mode	Operations other than the release of the front key protection setting cannot be executed. (Will not be displayed)

8-7 Special Parameters

Pn600	Analog Torque Feed-forward Gain Setting					Position Speed Fully-closed	
Setting range	0 to 100	Unit	0.1 V/100%	Default setting	0	Power OFF and ON	–

- Set the input gain for analog torque feed forward.0 to 9 will disable the function.

Pn602	Excessive Speed Error Setting					All	
Setting range	0 to 26000	Unit	r/min	Default setting	0	Power OFF and ON	–

- Set the detection level for excessive speed error (alarm 24.1).
- If 0 is set, excessive speed error will not be detected.

Pn604	Jog Speed					All	
Setting range	0 to 500	Unit	r/min	Default setting	300	Power OFF and ON	–

- Set the command speed during JOG trial operation (speed control).

Pn605	Gain 3 Effective Time					Position Fully-closed	
Setting range	0 to 10,000	Unit	0.1 ms	Default setting	0	Power OFF and ON	–

- Set effective time of gain 3 of 3-step gain switching.

Pn606	Gain 3 Ratio Setting					Position Fully-closed	
Setting range	100 to 1,000	Unit	%	Default setting	100	Power OFF and ON	–

- Set gain 3 as a multiple of gain 1.

Pn607	Torque Command Value Offset					All	
Setting range	–100 to 100	Unit	%	Default setting	0	Power OFF and ON	–

- Set offset torque to add to torque command.

Pn608	Forward Direction Torque Offset					All	
Setting range	–100 to 100	Unit	%	Default setting	0	Power OFF and ON	–

- Set the value to add to the torque command in the forward direction operation.

Pn609	Reverse Direction Torque Offset					All	
Setting range	–100 to 100	Unit	%	Default setting	0	Power OFF and ON	–

- Set offset torque to add to torque command for reverse direction operation.

Pn610	Function Expansion Setting					Position	
Setting range	0 to 63	Unit	–	Default setting	0	Power OFF and ON	–

- Set the functions by bit.

Bit	Function	Set value	
		0	1
bit 0	Instantaneous speed observer function	Disabled	Enabled
bit 1	Disturbance observer function	Disabled	Enabled
bit 2	Disturbance observer operation setting	Always enabled	Only when gain 1 is selected
bit 3	Inertia ratio switching function	Disabled	Enabled
bit 4	Electric current response improvement function	Disabled	Enabled
bit 5	Analog Torque Feed-forward	Disabled	Enabled

- Set the decimal value that has been converted from the bits.
  [Example]
- Instantaneous speed observer function: enabled
- Disturbance observer function: enabled
- Disturbance observer operation setting: always enabled
- Inertia ratio switching function: disabled
- Electric current response improvement function: enabled
- Analog torque feed-forward: disabled
  If the settings are as described above, the bits will be 010011, and the decimal value will be 19. Therefore, the set value will be 19.

Pn611	Electric Current Response Setting					All	
Setting range	50 to 100	Unit	%	Default setting	100	Power OFF and ON	–

- Make fine adjustment to electric current response. The default setting is 100%.

Pn613	Inertia Ratio 2					All	
Setting range	0 to 10,000	Unit	%	Default setting	250	Power OFF and ON	–

- Set the second load inertia as a percentage of the motor rotor inertia.

Pn614	Alarm Detection Allowable Time Setting					All	
Setting range	0 to 1,000	Unit	ms	Default setting	200	Power OFF and ON	–

- Set the allowable time before completing an immediate stop when an alarm occurs. When time T_B in the following diagram has elapsed, the alarm output will be forced ON.
  The resolution is 2 ms, so the allowable time will be 12 ms even if 11 is set.

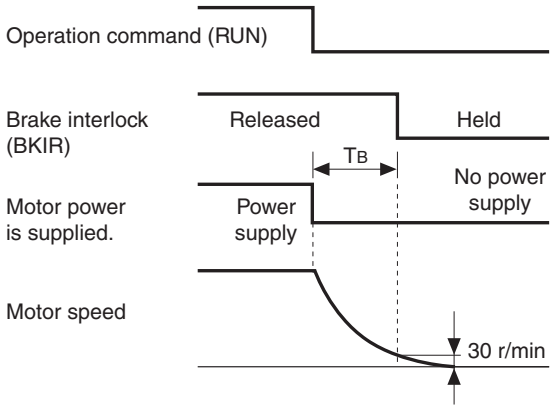

- TB in the above figure is the brake timing during operation or the time until the motor rotation speed falls to 30 r/min or lower, whichever is shorter.

- For details, refer to "6-6 Brake Interlock" (P.6-18).

Pn615	Overspeed Detection Level Setting at Immediate Stop					All	
Setting range	0 to 20,000	Unit	r/min	Default setting	0	Power OFF and ON	–

- Set overspeed detection level upon generation of immediate stop alarm.
- The overspeed detection level setting will be 1.2 times the maximum motor rotation speed if this parameter is set to 0.
- This parameter should normally be set to 0. The setting should be changed only when it is necessary to lower the overspeed detection level.
- The set value of this parameter is limited to 1.2 times the maximum motor rotation speed.

Pn616	Absolute Interface Function Selection					All	
Setting range	0 or 1	Unit	–	Default setting	1	Power OFF and ON	Yes

Explanation of Set Values

Set value	Explanation
0	Disabled
1	Enabled

- Set this parameter to 1.

Pn617	Front Panel Parameter Write Selection					All	
Setting range	0 or 1	Unit	–	Default setting	0	Power OFF and ON	Yes

Explanation of Set Values

Set value	Explanation
0	EEPROM write not performed when a parameter is changed from the front panel
1	EEPROM write performed at the same time

- Set the EEPROM write conditions when the front panel parameter is changed.

Pn618	Power Supply ON Initialization Time					All	
Setting range	0 to 100	Unit	0.1 s	Default setting	0	Power OFF and ON	Yes

- Set initialization time after power supply ON to the standard 1.5 seconds plus some.

Pn619	Encoder Phase-Z Setting					All	
Setting range	0 to 32,767	Unit	Pulse	Default setting	0	Power OFF and ON	Yes

- Finely adjust the encoder phase-Z width when the number of output pulses per motor rotation after the division of pulse output is not an integer.

Pn620	External Encoder Phase-Z Setting					Fully-closed	
Setting range	0 to 400	Unit	μs	Default setting	0	Power OFF and ON	Yes

- Set the external encoder phase-Z regeneration width with time.
- You can output the phase-Z signal at least for the period of time that has been set if the phase-Z signal width is too short for detection due to the travel distance from the external encoder.

Pn621	Serial Absolute External Encoder Phase-Z Setting					Fully-closed	
Setting range	0 to 2^{28}	Unit	Pulse	Default setting	0	Power OFF and ON	Yes

- The external encoder phase-Z output width can be extended.
- When you perform the pulse output using an external encoder as the output source under fully-closed control that uses the serial absolute external encoder, use this to set the intervals of phase-Z output based on the number of external encoder phase-A output pulses (before quadruple multiplier).

Explanation of Set Values

Set value	Explanation
0	Phase Z is output only at the position where the external encoder value is 0.
1 to 2^{28}	After the phase-Z output at the position where the external encoder value is 0, phase Z is output in the set value pulse cycle. Phase Z is not output until the external encoder value passes 0.

Pn622	Phase-AB Regeneration Method Selection for External Encoder of Phase-AB Output Type						
						Fully-closed	
Setting range	0 or 1	Unit	–	Default setting	0	Power OFF and ON	Yes

- Select the regeneration method of pulse outputs OA and OB when an external encoder of phase AB-output type is used.

Explanation of Set Values

Set value	Explanation
0	Without signal regeneration
1	With signal regeneration *1,*2

*1. Through outputs are always made for phase Z without signal regeneration.

*2. If the signal regeneration setting is selected, the duties of OA and OB are regenerated on the amplifier side and disturbance of waveforms can be suppressed. Take note, however, that this causes delays in phase Z.

Pn623	Disturbance Torque Compensation Gain					Position Fully-closed	
Setting range	–100 to 100	Unit	%	Default setting	0	Power OFF and ON	–

- Set the compensation gain for the disturbance torque.

Pn624	Disturbance Observer Filter Setting					Position Fully-closed	
Setting range	10 to 2,500	Unit	0.01 ms	Default setting	53	Power OFF and ON	–

- Set the filter time constant for disturbance torque compensation.

Pn627	Warning Latch Hold Time Selection					All	
Setting range	0 to 10	Unit	–	Default setting	5	Power OFF and ON	Yes

Explanation of Set Values

Set value	Explanation
0	Latch time infinite
1 to 10	Latch time of 1 to 10 s

Pn631	Realtime Autotuning Estimated Speed Selection					All	
Setting range	0 to 3	Unit	–	Default setting	1	Power OFF and ON	Yes

Explanation of Set Values

Set value	Explanation
0	Finalize estimated results when load estimation becomes stable.
1	Estimates every minute from the load characteristic changes.
2	Estimates every second from the load characteristic changes.
3	Estimates the optimum speed from the load characteristic changes.

Pn632	Realtime Autotuning Customization Mode Setting						All
Setting range	–32,768 to 32,767	Unit	–	Default setting	0	Power OFF and ON	–

- Set details of autotuning when the Realtime Autotuning Mode Selection (Pn002) is set to 6.
- Refer to "10-2 Realtime Autotuning" (P.10-3) for information on realtime Autotuning.

Explanation of Set Values

Bits	Name	Explanation
0 or 1	Load characteristics estimation *1	Enable or disable load characteristics change, the estimation. 0: Disabled 1: Enabled
2 or 3	Change inertia ratio	Set how to update the results of load characteristics estimation for the Inertia Ratio (Pn004). 0: Use the present set value 1: Update with the estimation result
4 to 6	Torque compensation	Set how to update the results of load characteristics estimation for the Torque Command Offset (Pn607), Forward Torque Offset (Pn608), and Reverse Torque Offset (Pn609). 0: Use the present set value 1: Disable torque compensation and clear the above parameters to 0. 2: Vertical mode. Update Pn607 and clear Pn608 and Pn609 to 0. 3: Weak friction compensation. Update Pn607 and set Pn608 and Pn609 for weak friction compensation. 4: Medium friction compensation. Update Pn607 and set Pn608 and Pn609 for medium friction compensation. 5: Strong friction compensation. Update Pn607 and set Pn608 and Pn609 for strong friction compensation.
7	Rigidity setting	Enable or disable the basic gain settings for the Realtime Autotuning Machine Rigidity Selection (Pn003). 0: Disabled 1: Enabled
8	Fixed parameter setting	Enable or disable the normally fixed parameters. 0: Use the current settings 1: Set to fixed values
9 to 10	Gain switching setting	Select the setting method for parameters related to gain switching when realtime autotuning is enabled. 0: Use the current settings 1: Disable gain switching 2: Enable gain switching

*1 When load characteristic estimation is disabled, inertia ratio updating is also disabled, even if the latter is set to be updated with the estimation result. When torque compensation is updated with the estimation result, load characteristic estimation is disabled.

Safety Points

- This parameter is set at the bit level. Unexpected operation may occur if the bits are not set correctly. Set this parameter with care.

Reference

Setting Bit-level Parameters

Use the following procedure to calculate the set value if all settings are not 0.

(1) Check the lowest bit for each setting.
Example: Lowest bit for torque compensation: 4

(2) Multiply the set value by 2 to the power of the lowest bit.
Example: The value for weak friction compensation for the torque compensation would be $2^4 \times 3 = 48$.

(3) Repeat steps 1 and 2 for all settings and add the results to obtain the set value for Pn632.
Example: The calculation is as follows for the following settings: Load characteristic estimation: Enabled, Inertia ratio updating: Enabled, Torque compensation: Weak friction compensation, Rigidity setting: Enabled, Fixed parameters: Set to fixed values, and Gain switching: Enabled.
$2^0 \times 1 + 2^2 \times 1 + 2^4 \times 3 + 2^7 \times 1 + 2^8 \times 1 + 2^9 \times 2 = 1461$

Pn633	Absolute Encoder Initial Pulse Regeneration Speed					All	
Setting range	1,000 to 3,000	Unit	r/min	Default setting	1000	Power OFF and ON	–

- Set the pulse regeneration speed when the initial pulse is output.
- Connection with OMRON controller
  For the Host Controller to correctly receive the position from the absolute encoder, the pulse output from the drive must be set to be completed before the controller's timeout.
- Pulse are outputted to a speed equivalent to a motor rotating at a speed specified by this parameter.

The following values or more are recommended for use.

OMRON controller	Pn633
CJ1W-NC□□4	1000
CS1W-MC□□□	1000
CV500-MC□□□	3000
3F88M-DRT141	1500

*1. You can set the timeout setting time on the controller side.

Pn634	Hybrid Vibration Suppression Gain					Fully-closed	
Setting range	0 to 30,000	Unit	0.1/s	Default setting	0	Power OFF and ON	–

- Set the hybrid vibration suppression gain.
- In general, set it to the same value as the position loop gain, and finely adjust it based on the situation.

Pn635	Hybrid Vibration Suppression Filter					Fully-closed	
Setting range	0 to 6,400	Unit	0.01 ms	Default setting	10	Power OFF and ON	–

- Set the hybrid vibration suppression filter.

Pn637	Vibration Detection Threshold					All	
Setting range	0 to 1,000	Unit	0.1%	Default setting	0	Power OFF and ON	–

- Set the vibration detection threshold.
- If torque vibration that exceeds this setting is detected, the vibration detection warning will occur.

Pn638	Warning Mask Setting					All	
Setting range	–32,768 to 32,767	Unit	–	Default setting	4	Power OFF and ON	Yes

- Set a mask for warning detection.
- If you set the corresponding bit to 1, the corresponding warning detection will be disabled.
- Refer to "11-2 Warning List" (P.11-4) for details on the setting method.

9

Operation

This chapter gives the operating procedures and explains how to operate in each mode.

9-1 Operational Procedure 9-1

9-2 Preparing for Operation 9-2

Items to Check Before Turning ON the Power Supply 9-2
Turning ON the Power Supply 9-3
Checking the Displays 9-3
Absolute Encoder Setup 9-4

9-3 Using the Front Display 9-6

9-4 Setting the Mode 9-7

Changing the Mode 9-7
Monitor Mode 9-8
Parameter Setting Mode 9-22
Parameter Write Mode 9-24
Auxiliary Function Mode 9-25

9-5 Trial Operation 9-33

Preparation for Trial Operation 9-33
Trial Operation in Position Control Mode 9-34
Trial Operation in Speed Control Mode 9-35
Trial Operation in Torque Control Mode 9-36
Trial Operation in Fully-closed Control Mode 9-37

9-1 Operational Procedure

Turn ON the power supply after the correct installation and wiring to check the operation of the individual motor and drive.
Then make the function settings as required according to the use of the motor and drive.
If the user parameters are set incorrectly, there is a risk of an unpredictable motor operation, which is dangerous. Set the parameters securely according to the setting methods in this manual.

Item	Contents	Reference
Mounting and installation	Install the motor and drive according to the installation conditions.(Do not connect the motor to the mechanical system before checking no-load operation.)	Chapter 4, 4-1
↓		
Wiring and connections	Connect the motor and drive to the power supply and peripheral equipment. Specified installation and wiring conditions must be satisfied, particularly for models conforming to the EC Directives.	Chapter 4, 4-2
↓		
Preparing for operation	Check the necessary items and then turn ON the power supply. Check on the display to see whether there are any internal errors in the drive. When using a Servomotor with an absolute encoder, set up the absolute encoder.	Chapter 9, 9-2
↓		
Function settings	By means of the user parameters, set the functions according to the operating conditions.	Chapter 8
↓		
Trial operation	First, check the motor operation with no-load. Then turn the power supply OFF and connect the motor to the mechanical system. If using a motor with an absolute encoder, set up the absolute encoder and set the Motion Control Unit's initial parameters. Turn ON the power supply again, and check to see whether protective functions, such as the emergency stop and operational limits, work properly. Check operation at both low speed and high speed using the system without a workpiece, or with dummy workpieces.	Chapter 9, 9-5
↓		
Adjustment	Manually adjust the gain if necessary. Further adjust the various functions to improve the control performance.	Chapter 10
↓		
Operation	Operation can now be started. If any problems should occur, refer to "Chapter 11, Troubleshooting and Maintenance".	Chapter 11

9-2 Preparing for Operation

This section explains the procedure to prepare the mechanical system for operation following installation and wiring of the motor and drive. It explains items to check both before and after turning ON the power supply.
It also explains the setup procedure required if using a motor with an absolute encoder.

Items to Check Before Turning ON the Power Supply

Checking Power Supply Voltage

- Check to be sure that the power supply voltage is within the ranges shown below.

R88D-KTA5L/KT01L/KT02L/KT04L (Single-phase 100-VAC input)
Main circuit power supply: Single-phase 100 to 120 VAC (85 to 132) 50/60 Hz
Control circuit power supply: Single-phase 100 to 120 VAC (85 to 132) 50/60 Hz

R88D-KT01H/02H/04H/08H/10H/15H (Single-phase or single-phase/3-phase 200-VAC input)
Main circuit power supply: Single-phase or single-phase/3-phase 200 to 240 VAC (170 to 264 V) 50/60 Hz Control circuit power supply: Single-phase 200 to 240 VAC (170 to 264 V) 50/60 Hz

R88D-KT20H/30H/50H (3-phase 200-VAC input)
Main circuit power supply: 3-phase 200 to 230 VAC (170 to 253 V)
50/60 Hz Control circuit power supply: Single-phase 200 to 230 VAC (170 to 253 V) 50/60 Hz

R88D-KT06F/KT10F/KT15F/KT20F/KT30F/KT50F (3-phase 400-VAC input)
Main circuit power supply: 3-phase 380 to 480 VAC (323 to 528 V)
50/60 Hz Control circuit power supply: 24 VDC ± 15%

Checking Terminal Block Wiring

- The main circuit power supply inputs (L1/L3 or L1/L2/L3) must be properly connected to the terminal block.
- The control circuit power supply inputs (L1C/L2C) must be properly connected to the terminal block.
- The motor's U, V, and W power lines and the green/yellow (⏚) must be properly connected to the terminal block.

Checking the Motor

- There should be no load on the motor. (Do not connect the mechanical system.)
- The motor side power lines and the power cables must be securely connected.

Checking the Encoder Wiring

- The encoder cable must be securely connected to the encoder connector (CN2) at the drive.
- The encoder cable must be securely connected to the encoder connector at the motor.

Checking the Control I/O Connector

- The control cable must be securely connected to the control I/O connector (CN1).
- The operation command (RUN) must be OFF.

Turning ON the Power Supply

- First carry out the preliminary checks, and then turn ON the control circuit power supply. It makes no difference whether or not the main circuit power supply is turned ON.
- The alarm output (/ALM) will take approx. 2 seconds to turn ON after the power supply has been turned ON. Do not attempt to detect an alarm using the Host Controller during this time. (If power supply is turned ON while the Host Controller is connected.)

Checking the Displays

Displays on the Drive

- The following will appear on the display area on the drive when the power supply is turned ON.

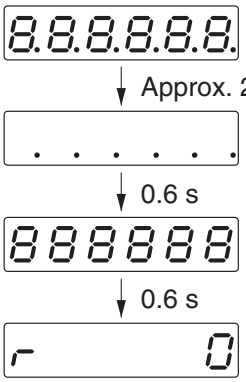

Absolute Encoder Setup ABS

You must set up the absolute encoder if using a motor with an absolute encoder. The setup is required when you turn ON the power supply for the first time, when an absolute encoder system down error (Alarm No. 40) occurs, or when the encoder cable is disconnected and then connected again.
When using an absolute encoder, set Pn015 to 0 or 2 and set Pn616 to 1.

Absolute Encoder Setup Procedure

1. Turn ON the power supply and align the origin position.
Turn ON the power supply, perform the origin adjustment operation, and move the machine to the origin position.

2. Go to Auxiliary Function Mode.
Press ⏎ and DATA on the drive. Auxiliary Function Mode will be displayed.

3. Use the Increment and Decrement keys to go to the Absolute Encoder Clear Mode.
Press DATA again. Absolute Encoder Clear Mode will be displayed.

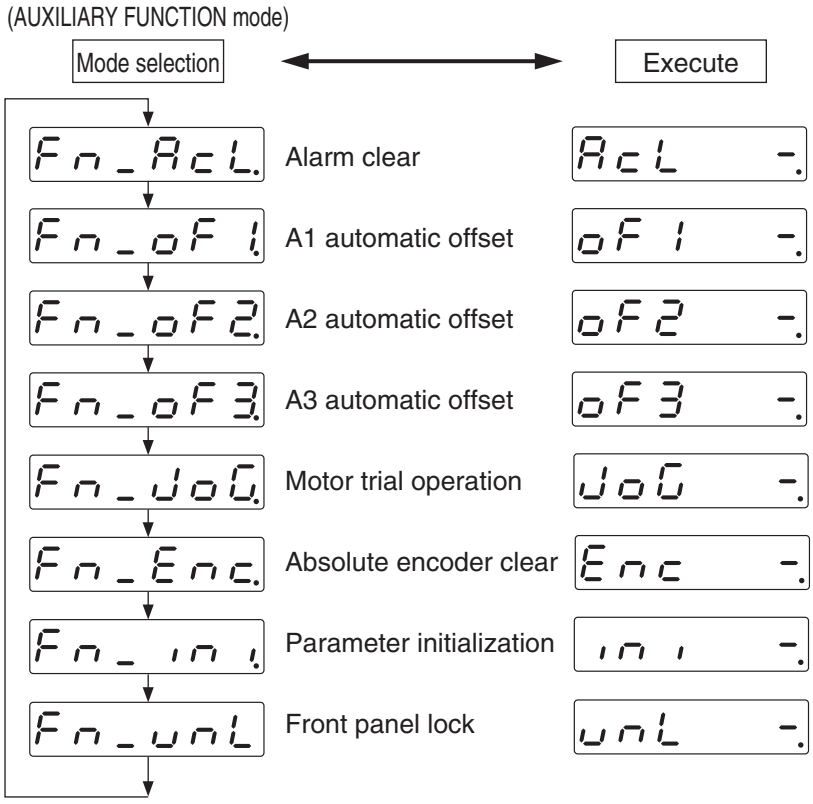

4. Start clearing the absolute encoder.
Hold down ⏫. Clearing the absolute encoder will be started.

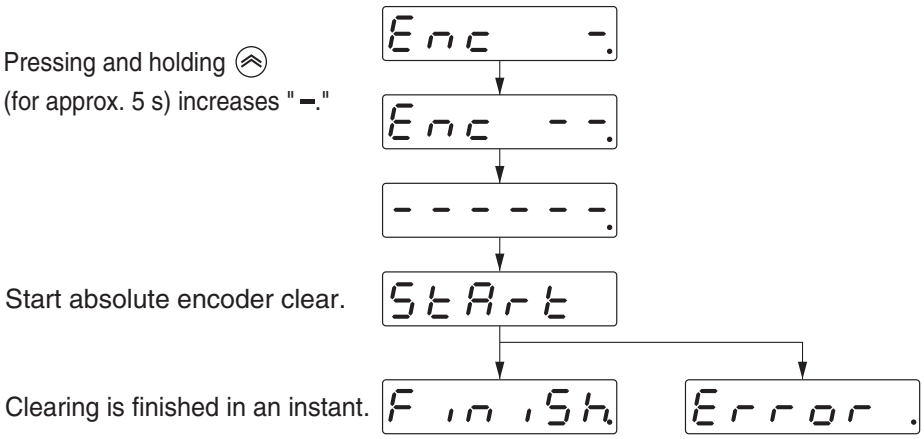

Note. Error . will be displayed if absolute encoder clear is performed on an incremental encoder.

5. Restart the drive.

Turn OFF the control power supply to the drive and then turn it back ON.

9-3 Using the Front Display

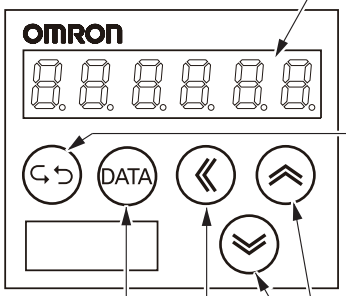

LED display (6 digits)

All LEDs will flash when an alarm occurs and the window switches to the alarm display.

Mode key

Switches between the following 4 modes.

- Monitor Mode
- Parameter Setting Mode
- Auxiliary Function mode
- Parameter Write mode

Increment and Decrement key

Increases/decreases the parameter number or data value.

Shift key

Shifts the operating digit to the left.

Data key

Switches between the parameter and data displays, and writes data.

9-4 Setting the Mode

Changing the Mode

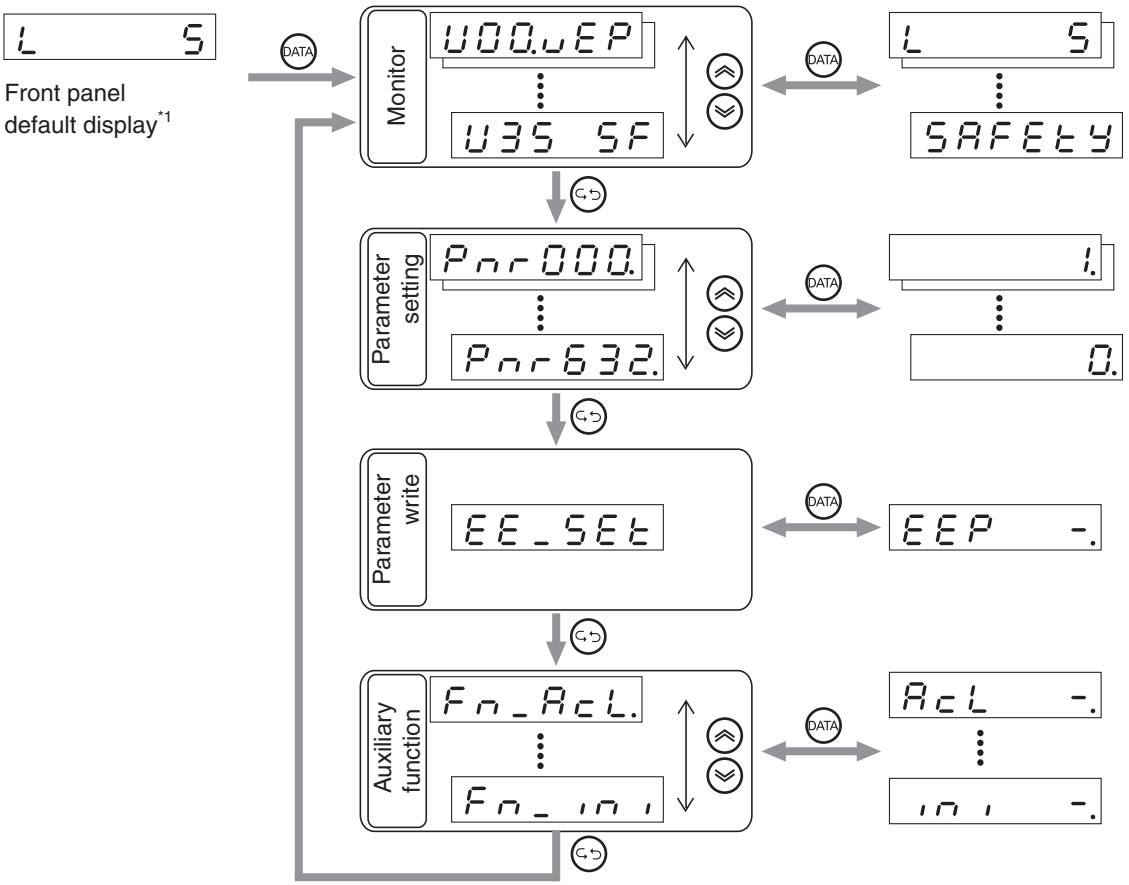

*1. The display will be based on the Default Display (Pn528) setting after the power supply is turned ON.

Monitor Mode

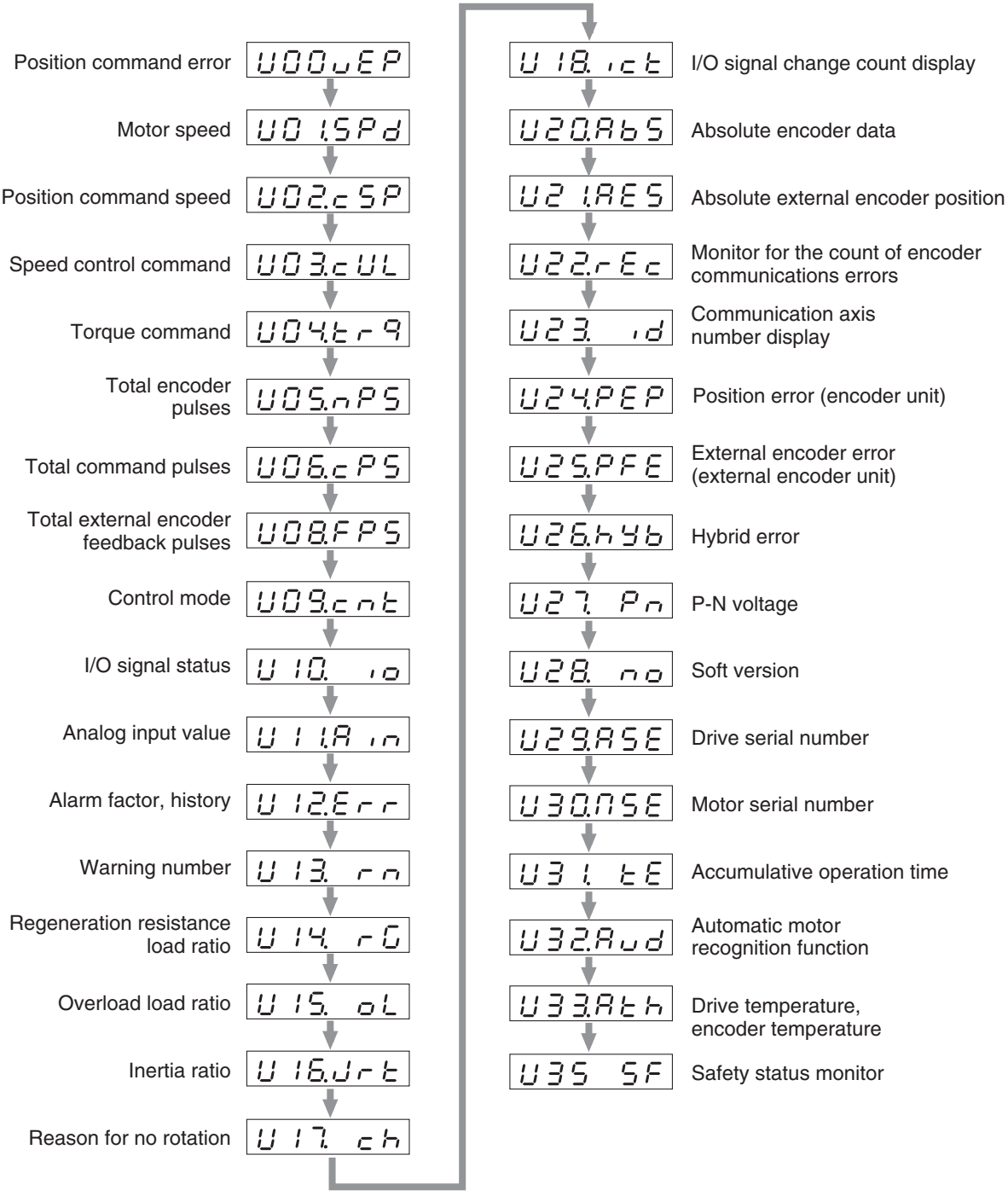

When ⌃ is pressed, the display position will move in the direction of the arrow.
When ⌄ is pressed, it will move in the opposite direction.

- The motor rotation speed will be displayed the first time the power supply is turned ON after purchase. To change the initial display when the power supply is turned ON, change the setting for the Default Display (Pn528). For details, refer to Pn528 "Default Display" (P.8-57).

Position Command Error

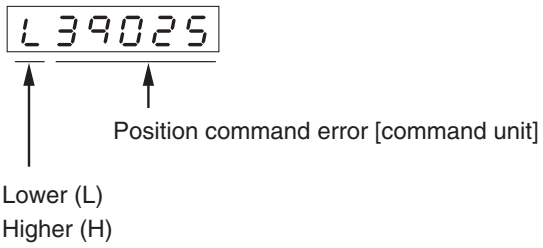

Press (《) to switch between Lower (L) and Higher (H).

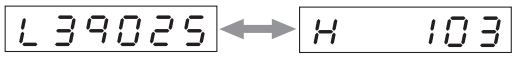

Motor Rotation Speed

- Displays the motor rotation speed (unit: r/min).
- Rotation speeds in reverse operation are displayed with "-".

Position Command Speed

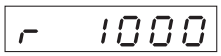

- Displays the position command speed (unit: r/min).

Speed Control Command

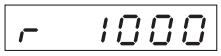

- Displays the speed control command (unit: r/min).

Torque Command

- Displays the percentage of drive torque command.
- When the rated torque output for the drive is used, "100%" is displayed.
- Torque outputs in reverse operation are displayed with "-".

Total Encoder Pulses

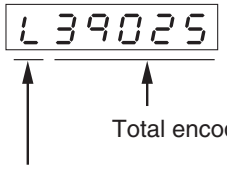

Total encoder pulses [encoder pulse]

Lower (L)
Higher (H)

Press ⟪ to switch between Lower (L) and Higher (H).

Total Command Pulses

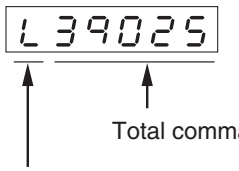

Total command pulses [command pulse]

Lower (L)
Higher (H)

Press ⟪ to switch between Lower (L) and Higher (H).

Total External Encoder Feedback Pulses

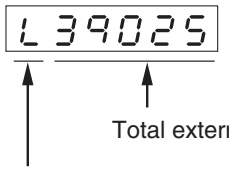

Total external encoder feedback pulses

Lower (L)
Higher (H)

Press ⟪ to switch between Lower (L) and Higher (H).

Control Mode

PoScnt	Position Control Mode
SPdcnt	Speed Control Mode
trqcnt	Torque Control Mode
FcLcnt	Fully-closed Control Mode

- Displays which control mode is being used: position control, speed control, torque control, or fully-closed control.

I/O Signal Status

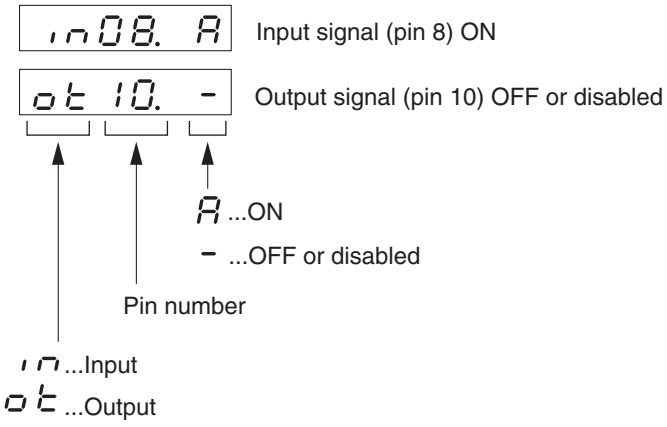

- Displays the status of the control input and output signals connected to CN1.

Switching between Input Signals and Output Signals

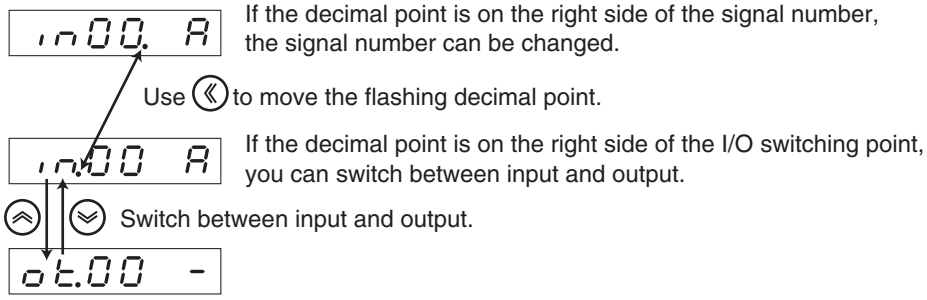

Press ⌃ ⌄ to select the signal you want to monitor.

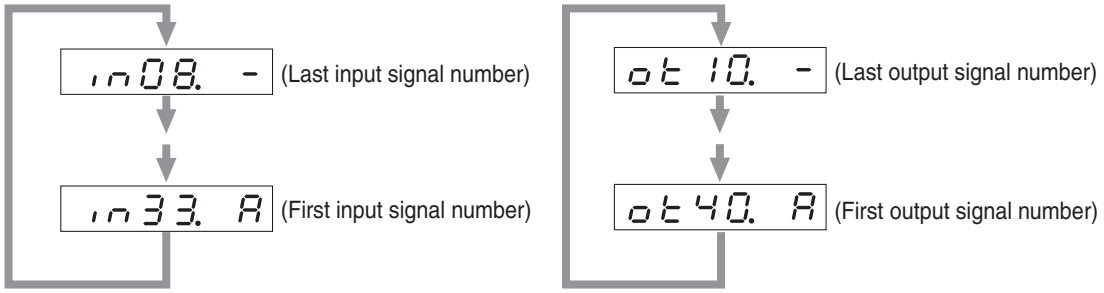

Analog Input Value

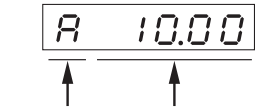

Press ⏶ ⏷ to select the signal you want to monitor.

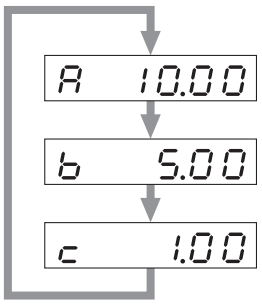

Analog input value 1 (V)
The value after offset compensation is displayed.

Analog input value 2 (V)

Analog input value 3 (V)

Note. Voltages exceeding +/−10 V are not displayed accurately.

Alarm Factor, History

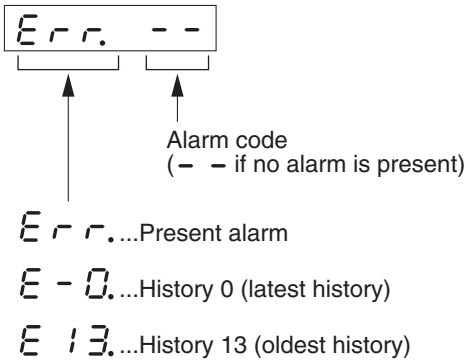

- Up to the most recent 14 alarms, including the current one, can be viewed in the reason of error.
- The display area will flash when an alarm occurs.
- If an alarm that is recorded in the history occurs, the alarm code for the current alarm and for history 0 will be the same.
- "st" will flash on the display if a safety input error (alarm 30.0) occurs.

Alarm Codes and Meanings

Alarm codes	Contents	Alarm codes	Contents
11	Control power supply undervoltage	36	Parameter error
12	Overvoltage	37	Parameters destruction
13	Main power supply undervoltage	38	Drive prohibition input error
14	Overcurrent	39	Excessive analog input
15	Servo Drive overheat	40	Absolute encoder system down error **ABS**
16	Overload	41	Absolute encoder counter overflow error **ABS**
18	Regeneration overload	42	Absolute encoder overspeed error **ABS**
21	Encoder communications error	44	Absolute encoder 1-rotation counter error **ABS**
23	Encoder communications data error	45	Absolute encoder multi-rotation counter error **ABS**
24	Error counter overflow	46	Encoder error 1
26	Overspeed	47	Absolute encoder status error **ABS**
27	Electronic gear setting error	48	Encoder phase-Z error
34	Overrun limit error	49	Encoder CS signal error

Note. The following alarms are not recorded in the history.
- 11: Control power supply undervoltage
- 13: Main power supply undervoltage
- 36: Parameter error
- 37: Parameters destruction
- 38: Drive prohibition input error
- 95: Motor non-conformity

Warning Number

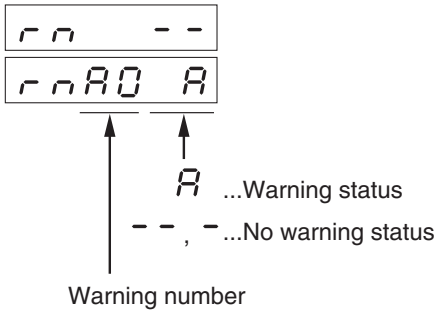

Press ⏫ ⏬ to display the occurrence status of each warning.

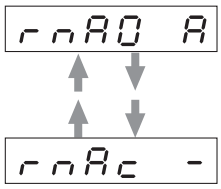

Regeneration Load Ratio

- Displays the regeneration resistance load ratio as a percentage when the detection level for the regeneration overload is 100%.

Overload Load Ratio

- Displays the position command speed (unit: r/min).
- Displays the overload ratio as a percentage when the rated load corresponds to 100%.

Inertia Ratio

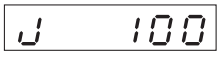

The inertia ratio (%) is displayed.

Reasons for No Rotation

A number is displayed to indicate the reason the motor does not rotate.

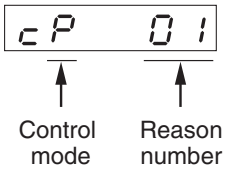

P ...Position control t ...Torque control
S ...Speed control F ...Fully-closed control

Number	Item	Relevant control mode	Description
Flashing	Alarm or warning has occurred	All	An alarm has occurred. Warning has occurred.
0	No reason	All	No reason has been detected. The motor operation should be possible.
1	Main power supply interrupted	All	The main power supply to the drive is not turned ON.
2	No RUN input	All	The operation command (RUN) is not connected to COM.
3	Drive prohibition input is enabled.	All	When Pn504 = 0 (drive prohibition input enabled): · The forward drive prohibition input (POT) is open and the speed command is in the forward direction. · The reverse drive prohibition input (NOT) is open and the speed command is in the reverse direction.
4	Low torque limit setting	All	The currently effective torque limit set value, Pn013 (No. 1 Torque Limit) or Pn522 (No. 2 Torque Limit), is less than 5% of the rated torque.
5	Analog torque limit input is enabled.	P, S	When Pn527 = 0 (analog torque limit scale): · The forward analog torque limit input is negative and the speed command is in the forward direction. · The reverse analog torque limit input is positive and the speed command is in the reverse direction.
6	IPG input is enabled.	P	Pn518 = 0 (command pulse prohibition input enabled) and the IPG input is open.
7	Frequency of command pulse input is low.	P	· The command pulse is not input correctly. · The input selected in Pn005 is not connected correctly. · The type of input selected in Pn006 or Pn007 is not correct. The position command per control cycle is 1 pulse or less and the above are some of the possible causes.
8	ECRST input is enabled.	P	Pn517 = 0 (Error counter reset at the level) and the error counter reset input (ECRST) is connected to COM.
9	VZERO input is enabled.	S, T	Pn315 = 1 (zero speed designation enabled) and the zero speed designation input (VZERO) is open.
10	External speed command is low.	S	The analog speed command is 0.06 V or lower when the analog speed command is selected.
11	Internal speed command is 0.	S	The internal speed command is 30 r/min or less when the internal speed command is selected.
12	Torque command is low	T	The analog torque command input (REF or PCL) is 5% or less of the rated torque.
13	Speed limit is low	T	· Pn317 = 0 (speed limit with No. 4 internally set speed) and the No. 4 Internally Set Speed (Pn307) is 30 r/min or lower. · Pn317 = 1 (speed limit with REF input) and the analog speed command input (REF) is 0.06 V or lower.

Number	Item	Relevant control mode	Description
14	Other reasons	All	Reasons 1 to 13 do not apply, but the motor is rotating at 20 r/min or lower. (Low command, heavy, locked, or crashed load, faulty drive or motor, etc.)

Note.The motor may rotate even if a reason number other than 0 is displayed.

Display of the Number of I/O Signal Changes

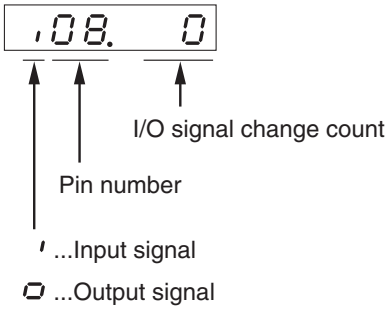

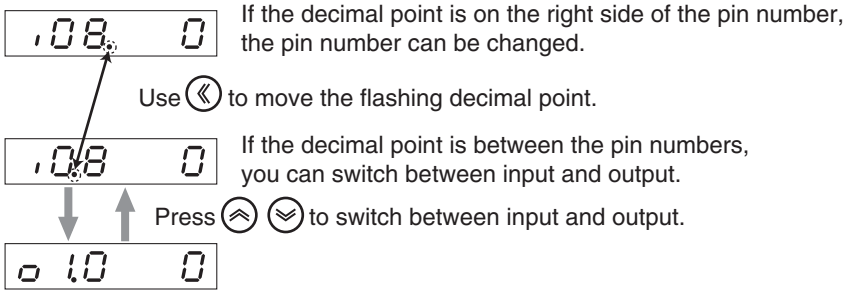

- Display the number of transitions in one input since last power-on.

Absolute Encoder Data

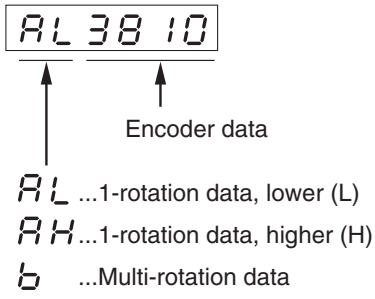

Press to select the data you want to display.

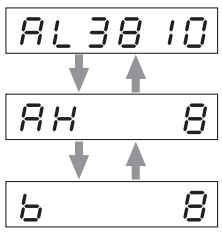

Absolute External Encoder Position

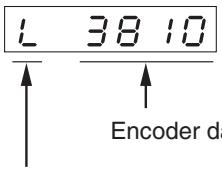

L ...Absolute external encoder position, lower (L)

H ...Absolute external encoder position, higher (H)

Press ⏶ ⏷ to switch between Lower (L) and Higher (H).

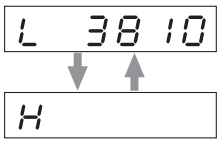

Monitor for the Number of Encoder and External Encoder Communications Error

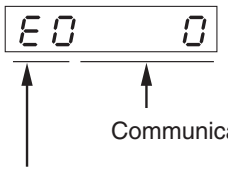

E0 ...Encoder F0 ...External encoder

Press ⏶ ⏷ to switch between encoder and external encoder.

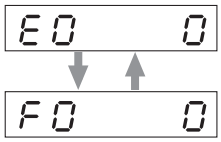

Display of Axis Numbers for Communication

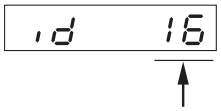

The value set by the Axis Number (Pn531) is displayed.

Encoder Position Error

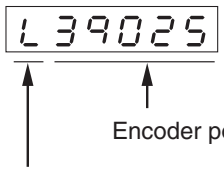

Encoder position error [encoder unit]

Lower (L)
Higher (H)

Press ⟪ to switch between Lower (L) and Higher (H).

External Encoder Position Error

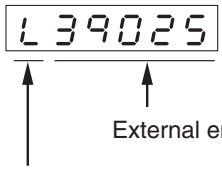

External encoder error [external encoder unit]

Lower (L)
Higher (H)

Press ⟪ to switch between Lower (L) and Higher (H).

Hybrid Error

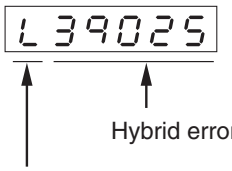

Hybrid error [command unit]

Lower (L)
Higher (H)

Press ⟪ to switch between Lower (L) and Higher (H).

P-N Voltage

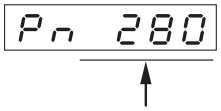

P-N voltage [V] is displayed.

Soft Version

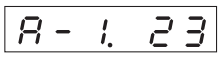

- Displays the soft version of the drive. (Display example: Ver. 1.23)

Drive Serial Number

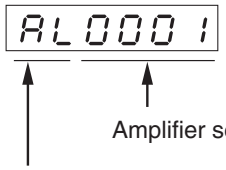

Amplifier serial number

AL ...Amplifier serial number, lower (L) AH ...Amplifier serial number, higher (H)

Press ⊙ ⊙ to switch between Lower (L) and Higher (H).

Display example) When serial number is 09040001

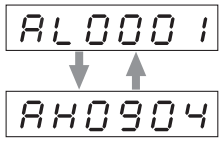

Motor Serial Number

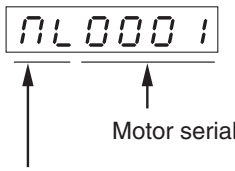

Motor serial number

nL ...Motor serial number, lower (L) nH ...Motor serial number, higher (H)

Press ⊙ ⊙ to switch between Lower (L) and Higher (H).

Display example) When serial number is 09040001

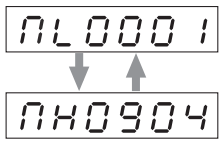

Accumulative Operation Time

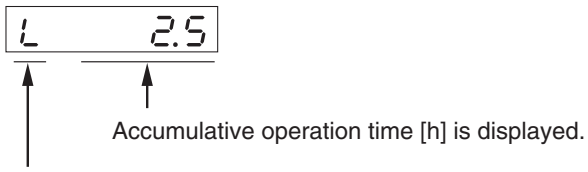

Press (≪) to switch between Lower (L) and Higher (H).

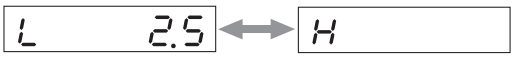

Automatic Motor Recognition Function

Automatic recognition enabled

Automatic recognition disabled

Drive Temperature and Encoder Temperature

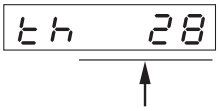

Press (≪) or (≫) to switch to the item to be monitored.

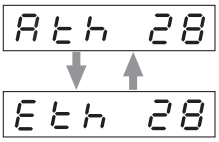

Note: Encoder temperature information is displayed only for an incremental encoder. “0” will be displayed for an absolute encoder.

Safety Status

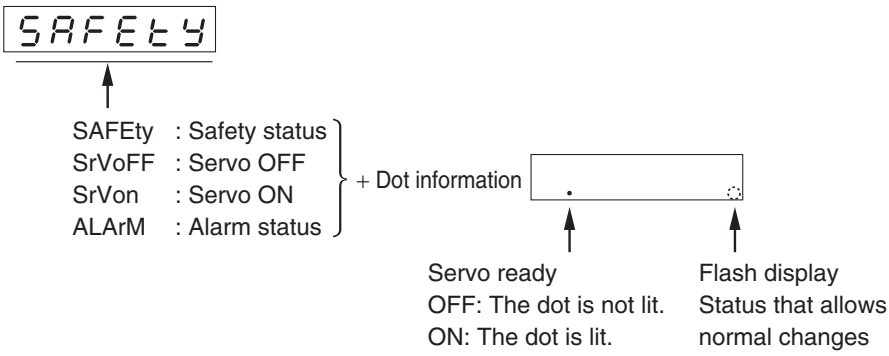

Press ⏶ ⏷ to switch between monitors you want to display.

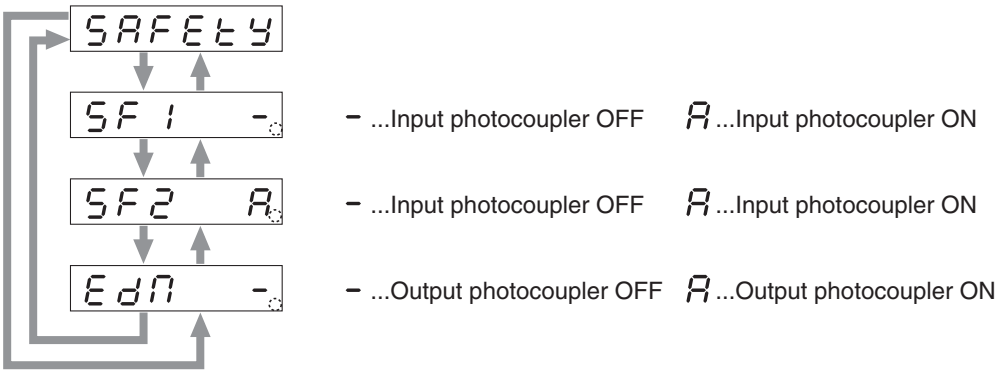

Parameter Setting Mode

1. Displaying Parameter Mode

Key operation	Display example	Explanation
	r 0	The item set for the Default Display (Pn528) is displayed.
DATA	Un_SPd.	Press the DATA key to display Monitor Mode.
↩	Pn_ 10.	Press ↩ key to display Parameter Setting Mode.

2. Setting the parameter number

Key operation	Display example	Explanation
≪ ∧ ∨	Pn_ 10.	Use ≪ ∧ ∨ keys to set the parameter number. · Press ≪ to move "." to the left and change the digit to be set. · Press ∧ to increase the value of the digit with ".". · Press ∨ to decrease the value of the digit with ".".

3. Displaying parameter set values

Key operation	Display example	Explanation
DATA	40.	Press the DATA key to display the set value.

4. Changing the parameter set value

Key operation	Display example	Explanation
≪ ∧ ∨	100.	Use the ≪ ∧ ∨ keys to change the value. · Press ≪ to move "." to the left and change the digit to be set. · Press ∧ to increase the value of the digit with ".". · Press ∨ to decrease the value of the digit with ".".
DATA	100.	Press the DATA key to save the new set value. · To cancel the change, instead of pressing DATA, press ↩ to return to the display in procedure 2.

5. Returning to Parameter Setting Mode

Key operation	Display example	Explanation
DATA	Pn_ 10.	Press the DATA key to return to Parameter Setting Mode.

Precautions for Correct Use

- Some parameters will be displayed with an "r" before the number when the display returns to the Parameter Setting Mode. To enable the set values that have been changed for these parameters, you must turn the power supply OFF and ON after saving the parameters to the EEPROM.
- If the Front Panel Parameter Write Selection (Pn617) is set to 1, the parameter set value is automatically written to EEPROM when changed.
- When the set value for a parameter is saved, the new setting will be used for control. Make gradual changes instead of changing the large numbers at once, when changing values for parameters that greatly affect motor operation (speed loop gain, position loop gain, etc. in particular).
- For details on parameters, refer to "Chapter 8, Parameter Details".

Parameter Write Mode

Set values changed in Parameter Setting Mode must be saved to EEPROM. To do so, the following operation must be performed.

1. Saving changed set values

Key operation	Display example	Explanation
	EE_SEt	Press the key to display Parameter Write Mode.
	EEP -.	Press the key to enter Parameter Write Mode.
	EEP --. ------. StArt	Press and hold the key for 5 seconds or longer until StArt is displayed. The bar indicator will increase. Writing will start. (This display will appear only momentarily.)
	FinISh.	This indicates a normal completion. In addition to this display, either rESEt. or Error. may be displayed. If rESEt. is displayed, writing has been completed normally, but some of the changed parameters will be valid only after the power supply has been turned OFF and ON again. Turn OFF the drive power supply and then turn it ON again. Error. will be displayed if there is a write alarm. Write the data again.

2. Returning to Parameter Write Mode

Key operation	Display example	Explanation
	EE_SEt	Press the key to return to Parameter Write Mode.

Precautions for Correct Use

- If a write alarm occurs, write the data again. If write alarms continue to occur, there may be a fault in the drive.
- Do not turn OFF the power supply while writing to EEPROM. Incorrect data may be written if the power supply is turned OFF. If the power supply is turned OFF, perform the settings again for all parameters, and write the data again.

Auxiliary Function Mode

Auxiliary Function Mode includes the alarm clear, analog input automatic offset adjustment, absolute encoder reset, jog operation, parameter initialization, and front panel lock/release.

Displaying Auxiliary Function Mode

Key operation	Display example	Explanation
	r 0	The item set for the Default Display (Pn528) is displayed.
DATA	Un_SPd.	Press the DATA key to display Monitor Mode.
	AF_AcL.	Press the key 3 times to display Auxiliary Function Mode.

Alarm Clear

This releases the alarm generation status.
Some alarms cannot be released. Refer to "11-3 Alarm List" (P.11-5) for details.

1. Execute alarm clear

Key operation	Display example	Explanation
DATA	AcL -.	Press the DATA key to enter Alarm Clear Mode.
	AcL --.	Press and hold the key for 5 seconds or longer until StArt is displayed.
	------.	The bar indicator will increase.
	StArt	Alarm clear will start.
	Finish.	This indicates a normal completion. Error . will be displayed if the alarm could not be cleared. Reset the power supply to clear the alarm.

2. Returning to Auxiliary Function Mode display

Key operation	Display example	Explanation
DATA	Fn_AcL.	Press the DATA key to return to Auxiliary Function Mode.

Analog Input Automatic Offset Adjustment

This performs automatic adjustment on the Offset Values (Pn422, Pn425 and Pn428) of Analog Inputs 1 to 3 (AI1 to AI3).
Do not perform this operation if a position loop has been configured with the host system.

1. Execute automatic offset adjustment

Key operation	Display example	Explanation
⏫	Fn_oF1. or Fn_oF2. or Fn_oF3.	Press the ⏫ key to display the Analog Input Automatic Offset Adjustment Mode from the alarm clear display in the Auxiliary Function Mode.
DATA	oF1 -. or oF2 -. or oF3 -.	Press the DATA key to enter the Automatic Offset Adjustment Mode of the analog input number to be set.
⏫	oF1 --. or oF2 --. or oF3 --. ------. StArt	Press and hold the ⏫ key for 5 seconds or longer until StArt is displayed. The bar indicator will increase. Automatic offset adjustment will start.
	Finish.	This indicates a normal completion. Error will be displayed if the automatic offset adjustment could not be performed. Set a valid control mode or make the setting so that the offset value does not exceed the range for the Speed Command Offset Value (Pn422, Pn425, or Pn428), and then execute the procedure again.

2. Returning to Auxiliary Function Mode display

Key operation	Display example	Explanation
DATA	Fn_oF1. or Fn_oF2. or Fn_oF3.	Press the DATA key to return to Auxiliary Function Mode.

Precautions for Correct Use

- Automatic offset adjustment function cannot be performed in Position Control Mode.
- Data is not written to the EEPROM simply by performing automatic offset adjustment. The data must be written to the EEPROM for the results to be saved.

Jog Operation

You can perform a trial operation of the motor with no load without wiring the control I/O connector (CN1).

1. Prepare for a jog operation

Key operation	Display example	Explanation
⏫	Fn_JoG.	Press the ⏫ key to display the Jog Operation Mode from the alarm clear display in Auxiliary Function Mode.
DATA	JoG -.	Press the DATA key to enter Jog Operation Mode.
⏫	JoG --.	Press and hold the ⏫ key for 5 seconds or longer until StArt is displayed.
	------.	The bar indicator will increase.
	rEAdY.	This completes preparations for jog operation. Error. will be displayed if the servo is not ready.
⏬	rEAdY.	Press and hold the ⏬ key for 5 seconds or longer until StArt is displayed.
	r.EAdY	The decimal point will move to the left.
	SrU_on	The Servo will turn ON.

2. Execute jog operation

Key operation	Display example	Explanation
⏫ ⏬	SrU_on	Forward direction operation will be performed while the ⏫ key is pressed, and reverse direction operation will be performed while the ⏬ key is pressed. The motor will stop when the key is released. The rotation speed at this time will be the speed set for the Jog Speed (Pn604). Error. will be displayed if the servo is not ready.

3. Returning to Auxiliary Function Mode display

Key operation	Display example	Explanation
DATA	Fn_JoG.	Press the DATA key to return to Auxiliary Function Mode. The servo lock will be released and the servo will be unlocked.

Precautions for Correct Use

- When performing a jog operation, be sure to first disconnect the motor from any load and remove the control I/O connector (CN1).
- When performing a jog operation, set the parameter related to gains to an appropriate value to avoid any troubles, such as vibration. Set the Inertia Ratio (Pn004) to 0.
- The motor operates in the Speed Control Mode during a jog operation. Set each of the various settings so that the motor operates correctly for speed control.
- If the operation command (RUN) is turned ON during a jog operation, Error. will be displayed, and the jog operation will be cancelled and a normal operation through an external command will be performed.

Absolute Encoder Reset ABS

This resets the multi-rotation data and alarms of the absolute encoder.

1. Execute absolute encoder reset

Key operation	Display example	Explanation
⌃⌃	Fn_Enc	Press the ⌃⌃ key to display the Absolute Encoder Reset Mode from the alarm clear display in Auxiliary Function Mode.
DATA	Enc -.	Press the DATA key to enter Absolute Encoder Reset Mode.
⌃⌃	Enc --. ------. StArt	Press and hold the ⌃⌃ key for 5 seconds or longer until StArt is displayed. The bar indicator will increase. Absolute encoder reset will start.
	F inish.	This indicates a normal completion. Error. will be displayed if the absolute encoder reset could not be performed. Check whether an unsupported encoder is connected, and then execute the procedure again.

2. Returning to Auxiliary Function Mode display

Key operation	Display example	Explanation
DATA	Fn_Enc	Press the DATA key to return to Auxiliary Function Mod.

Precautions for Correct Use

- The absolute encoder reset function can be used only with systems that use an absolute encoder.

Parameter Initialization

This initializes the selected parameter.

1. Execute the initialization of the parameter.

Key operation	Display example	Explanation
DATA	Fn_ini	Press the DATA key to enter Parameter Initialization Mode.
⏫	ini --.	Press and hold the ⏫ key for 5 seconds or longer until StArt is displayed. The bar indicator will increase. The initialization of the selected parameter will start.
	------.	
	StArt	
	Finish.	This indicates a normal completion. Error . will be displayed if the parameter could not be initialized. Turn OFF the drive power supply and then execute again.

2. Returning to Auxiliary Function Mode display

Key operation	Display example	Explanation
DATA	AF_Enc	Press the DATA key to return to Auxiliary Function Mode.

Precautions for Correct Use

- If Alarm No. 11 (power supply undervoltage), 36 (parameter error) or 37 (parameter destruction) is displayed, the parameter cannot be initialized.

Front Panel Lock

This locks the front panel.

1. Displaying Parameter Mode

Key operation	Display example	Explanation
DATA	Un_SPd.	Press the DATA key to display Monitor Mode.
↪	Pn_ 10.	Press ↪ key to display Parameter Setting Mode.

2. Setting the parameter number

Key operation	Display example	Explanation
	Fn_535.	Use the ⟪ ⌃⌃ ⌄⌄ keys to set to Pn535. · Press ⟪ to move "." to the left and change the digit to be set. · Press ⌃⌃ to increase the value of the digit with ".". · Press ⌄⌄ to decrease the value of the digit with ".".

3. Displaying parameter set values

Key operation	Display example	Explanation
DATA	0.	Press the DATA key to display the set value.

4. Changing the parameter set value

Key operation	Display example	Explanation
	1.	Use the ⟪ ⌃⌃ ⌄⌄ keys to change the value. · Press ⟪ to move "." to the left and change the digit to be set. · Press ⌃⌃ to increase the value of the digit with ".". · Press ⌄⌄ to decrease the value of the digit with ".".
DATA	1.	Press the DATA key to save the new set value. · To cancel the change, instead of pressing DATA, press ↩ to return to the display in procedure 2.

5. Returning to Parameter Setting Mode

Key operation	Display example	Explanation
DATA	Fn_535.	Press the DATA key to return to Parameter Setting Mode.

6. Saving changed set values

Key operation	Display example	Explanation
↩	EE_SEt	Press the ↩ key to display Parameter Write Mode.
DATA	EEP -.	Press the DATA key to enter Parameter Write Mode.

Key operation	Display example	Explanation
	EEP --. ------. StArt	Press and hold the key for 5 seconds or longer until StArt is displayed. The bar indicator will increase. Writing will start. (This display will appear only momentarily.)
	Finish.	This indicates a normal completion. In addition to this display, either rESEt. or Error. may be displayed. If rESEt. is displayed, writing has been completed normally, but some of the changed parameters will be valid only after the power supply has been turned OFF and ON again. Turn OFF the drive power supply and then turn it ON again. Error. will be displayed if there is a write alarm. Write the data again.

7. Returning to Parameter Write Mode

Key operation	Display example	Explanation
	EE_SEt	Press the key to return to Parameter Write Mode.

8. Restart the power supply to the drive

Precautions for Correct Use

- The items that are limited depend on the mode.
- If the Front Panel Parameter Write Selection (Pn617) is set to 1, the parameter set value is automatically written to EEPROM when changed.
- Refer to the Front Key Protection Setting (Pn535) in "8-6 Extended Parameters" (P.8-47) for details on the front panel lock function.

Front Panel Lock Release

This releases the front panel lock.

1. Release the front panel lock

Key operation	Display example	Explanation
	Fn_unL	Press the key to display the Front Panel Lock Mode from the alarm reset display in Auxiliary Function Mode.
	unL -.	Press the key to enter Front Panel Lock Mode.
	unL --. ------. StArt	Press and hold the key for 5 seconds or longer until StArt is displayed. The bar indicator will increase. The front panel lock will be released.
	Finish.	This indicates a normal completion. Error . will be displayed if the front panel lock is not released. Turn OFF the drive power supply and then execute again.

2. Returning to Auxiliary Function Mode display

Key operation	Display example	Explanation
	Fn_Enc	Press the key to return to Auxiliary Function Mode.

9-5 Trial Operation

When you have finished installation, wiring, and switch settings, and have confirmed that status is normal after turning ON the power supply, perform trial operation. The main purpose of trial operation is to confirm that the servo system is electrically correct.
If an error occurs during the trial operation, refer to "Chapter 11, Troubleshooting and Maintenance" to eliminate the cause. Then check for safety, and then retry the trial operation.

Preparation for Trial Operation

Inspections before Trial Operation

Check the following items.

Wiring

- Make sure that there is no error (especially the power supply input and motor output).
- Make sure that there are no short-circuits. (Check the ground for short circuits as well.)
- Make sure that there are no loose connections.

Power Supply Voltage

- Make sure that the voltage corresponds to the rated voltage.

Motor Installation

- Make sure that the Servomotor is securely installed.

Disconnection from Mechanical System

- If necessary, make sure that the motor has been disconnected from the mechanical system.

Brake Released

- Make sure that the brake has been released.

Trial Operation in Position Control Mode

1. **Use the Connector CN1.**
2. **Supply 12 to 24 VDC to the control signal connector pins +24 VIN and COM.**
3. **Turn ON the Servo Drive power.**
4. **Confirm that the parameters are set to the standard set values.**
5. **Set to the output from the host device that agrees using the Command Pulse Input Mode (Pn007).**
6. **Write the parameters to EEPROM and then turn OFF the power supply and turn it ON again.**
7. **Connect the operation command input (RUN: CN1 pin 29) to COM (CN1 pin 41). Servo ON status will be entered and the motor will be activated.**
8. **Input a low-frequency pulse signal from the host device to start low-speed operation.**
9. **Check the motor rotation speed in Monitor Mode.**
   Check to see if the motor is rotating at the set speed and to see if the motor stops when the command (pulses) are stopped.

Trial Operation in Speed Control Mode

1. **Use the Connector CN1.**
2. **Supply 12 to 24 VDC to the control signal connector pins +24 VIN and COM.**
3. **Turn ON the Servo Drive power.**
4. **Confirm that the parameters are set to the standard set values.**
5. **Connect the operation command input (RUN: CN1 pin 29) to COM (CN1 pin 41). Servo ON status will be entered and the motor will be activated.**
6. **Close the zero speed designation input (VZERO) and gradually increase the DC voltage between the speed command input REF (CN1 pin 14) and AGND1 (CN1 pin 15) from 0 V. Check to see if the motor rotates.**
7. **Check the motor rotation speed in Monitor Mode.**

   Check to see if the motor is rotating at the set speed and to see if the motor stops when the command (pulses) are stopped.

   Use the following parameters to change the motor rotation speed or direction.

   - Pn302: Speed Command Scale
   - Pn303: Command Speed Rotation Direction Switching

Trial Operation in Torque Control Mode

1. **Use the Connector CN1.**
2. **Supply 12 to 24 VDC to the control signal connector pins +24 VIN and COM.**
3. **Turn ON the Servo Drive power.**
4. **Confirm that the parameters are set to the standard set values.**
5. **Set a low speed in the No. 4 Internally Set Speed (Pn307).**
6. **Connect the operation command input (RUN: CN1 pin 29) to COM (CN1 pin 41). Servo ON status will be entered and the motor will be activated.**
7. **Apply a positive or negative DC voltage between the torque command input TREF1 (CN1 pin 14) and AGND1 (CN1 pin 15). Check to see if the motor rotates according to the direction (forward/reverse) set in Pn307.**

   Use the following parameters to change the amount of the torque, direction of the torque, or speed limit value for the command voltage.
   - Pn307: No. 4 Internally Set Speed (default set value: 50 r/min)
   - Pn319: Torque Command Scale
   - Pn320: Torque Output Direction Switching

Trial Operation in Fully-closed Control Mode

1. **Use the Connector CN1.**
2. **Supply 12 to 24 VDC to the control signal connector pins +24 VIN and COM.**
3. **Turn ON the Servo Drive power.**
4. **Turn ON the power supply to the Servo Drive.**
5. **Confirm that the parameters are set to the standard set values.**
6. **Set the outputs from the host device to agree with the Command Pulse Mode (Pn005).**
7. **Write the parameters to EEPROM and then turn OFF the power supply and turn it ON again.**
8. **Connect the operation command input (RUN: CN1 pin 29) to COM (CN1 pin 41). Servo ON status will be entered and the motor will be activated.**
9. **Input a low-frequency pulse signal from the host device to start low-speed operation.**
10. **Check the motor rotation speed in Monitor Mode.**
    Check to see if the motor is rotating at the set speed and to see if the motor stops when the command (pulses) are stopped.

10

Adjustment Functions

This chapter explains the functions, setting methods, and items to note regarding various gain adjustments.

10-1 Gain Adjustment 10-1

Purpose of the Gain Adjustment 10-1
Gain Adjustment Methods..... 10-1
Gain Adjustment Procedure..... 10-2

10-2 Realtime Autotuning.....10-3

Setting Realtime Autotuning 10-4
Setting Machine Rigidity 10-4

10-3 Manual Tuning 10-12

Basic Settings 10-12

10-1 Gain Adjustment

OMNUC G5-series Servo Drives provide a realtime autotuning function.
With this function, gain adjustments can be made easily even by those using a servo system for the first time. If you cannot obtain the desired responsiveness with autotuning, use manual tuning.

Purpose of the Gain Adjustment

The Servo Drive must operate the motor in response to commands from the host system with minimal time delay and maximum reliability. The gain is adjusted to bring the actual operation of the motor as close as possible to the operation specified by the commands, and to maximize the performance of the machine.

Example: Ball screw

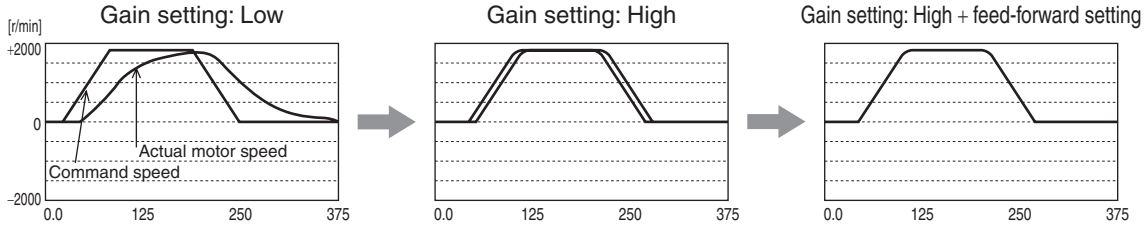

Gain setting: Low		Gain setting: High		Gain setting: High + feed-forward setting	
Position loop gain	: 3.0	Position loop gain	: 251.0	Position loop gain	: 251.0
Speed loop gain	: 2.5	Speed loop gain	: 140.0	Speed loop gain	: 140.0
Speed loop integral time	: 190.0	Speed loop integral time	: 6.0	Speed loop integral time	: 6.0
Speed feed-forward	: 30	Speed feed-forward	: 30	Speed feed-forward	: 100
Inertia ratio	: 300	Inertia ratio	: 300	Inertia ratio	: 300

10

Adjustment Functions

Gain Adjustment Methods

Function			Description	Reference page
Automatic adjustment	Realtime autotuning		Realtime autotuning estimates the load inertia of the machine in realtime and automatically sets the optimal gain according to the estimated load inertia.	P.10-3
Manual adjustment	Manual tuning		Manual adjustment is performed if autotuning cannot be executed due to restrictions on the control mode or load conditions or if ensuring that the maximum responsiveness matches each load is required.	P.10-12
		Basic procedure	Position Control/Fully-closed Control Mode adjustment	P.10-13
			Speed Control Mode adjustment	P.10-14
			Torque Control Mode adjustment	P.10-19

Note 1.Take sufficient measures to ensure safety.
Note 2.If vibration occurs (unusual noise or vibration), immediately turn OFF the power supply or turn OFF the servo.

Gain Adjustment Procedure

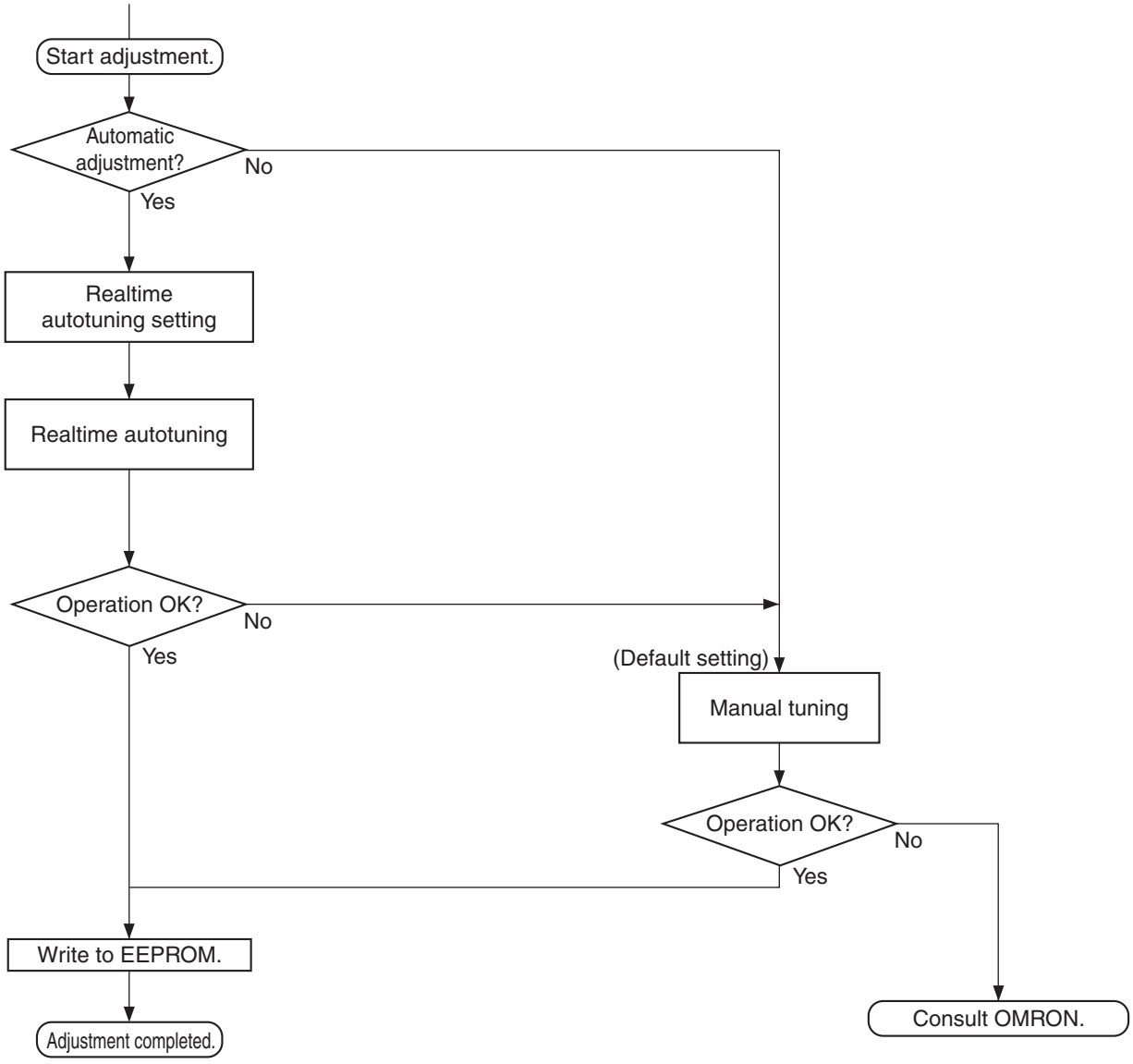

Gain Adjustment and Machine Rigidity

To improve machine rigidity:

- Install the machine on a secure base so that it does not have any play.
- Use couplings that have a high rigidity, and that are designed for servo systems.
- Use a wide timing belt. And use a tension within the range of allowable axial load for the motor or Decelerator output.
- Use gears with small backlash.
  The specific vibration (resonance frequencies) of the mechanical system has a large impact on the gain adjustment of the servo. The servo system responsiveness cannot be set high for machines with a low resonance frequency (low machine rigidity).

10-2 Realtime Autotuning

Realtime autotuning estimates the load inertia of the machine in realtime, and operates the machine by automatically setting the gain according to the estimated load inertia. At the same time, it can lower the resonance and vibration if the adaptive filter is enabled.
Realtime autotuning is enabled for any control to adjust the speed loop PI control.

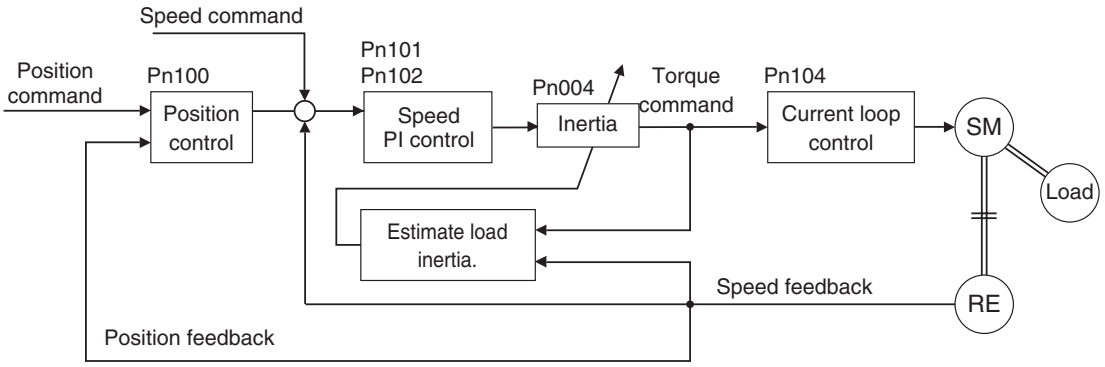

Precautions for Correct Use

- Realtime autotuning may not function properly under the conditions described in the following table. In such cases, use manual tuning.

	Conditions under which realtime autotuning does not operate properly
Load inertia	• If the load inertia is too small or too large compared with the rotor inertia (less than 3 times, more than 20 times, or more than the applicable load inertia ratio). • If the load inertia changes quickly. (in less than 10 s)
Load	• If the machine rigidity is extremely low. • If there is backlash or play in the system.
Operation pattern	• If the speed continues at below 100 r/min. • If the acceleration/deceleration is below 2,000 r/min in 1 s. • If the acceleration/deceleration torque is too small compared with the unbalanced load and the viscous friction torque. • If either a speed of 100 r/min or higher, or an acceleration/deceleration of 2,000 r/min/s does not last for at least 50 ms.

- With realtime autotuning, each parameter is fixed to the value in the machine rigidity table at the time the machine rigidity is set. By estimating the load inertia from the operation pattern, the operation coefficient for the speed loop gain and the integral time constant are altered. Doing this for each pattern can cause vibration, so the estimation value is set conservatively.

Setting Realtime Autotuning

1. When setting realtime autotuning, turn the servo OFF.

2. Set Realtime Autotuning Mode Selection (Pn002) depending on the load.

Normally, set the parameter to 1 or 2. When using a vertical axis, set the parameter to 3 or 4. A setting of 5 is used in combination with a software tool. Do not set the parameter to 5 for normal operation.

Gain switching function is enabled for set values 2 to 6.

Set value	Realtime autotuning	Description
0	Disabled	Realtime autotuning is disabled.
1	Focus on stability (default setting)	No unbalanced load, friction compensation, or gain switching.
2	Focus on position control	Used when unbalanced load and friction are small. Gain switching is set.
3	Vertical axis	Used when an unbalanced load is present, such as a vertical axis.
4	Friction compensation and vertical axis	Used when a vertical axis or other unbalanced load is present and when friction is large.
5	Load characteristic estimation	Used only for estimating load characteristics.
6	Customization	Used to customize the Realtime Autotuning Mode.

Setting Machine Rigidity

1. Set the Realtime Autotuning Machine Rigidity Selection (Pn003) according to the table below.

Start from the lower machine rigidity number and check the operation.

Machine configuration and drive method	Realtime Autotuning Machine Rigidity Selection (Pn003)
Ball screw direct coupling	12 to 24
Ball screw and timing belt	8 to 20
Timing belt	4 to 16
Gears, rack and pinion drives	4 to 16
Other machines with low rigidity	1 to 8
Stacker cranes	Perform manual tuning.

2. Turn the servo ON and operate the machine with a normal pattern.

To increase responsiveness, increase the machine rigidity number, and check the response. If vibration occurs, enable the adaptive filter and operate. If already enabled, lower the machine rigidity number.

- The adaptive filter can be left enabled even when disabling realtime autotuning after completing adjustments. Even if the adaptive filter is disabled, the set values of notch filters 3 and 4 will be maintained.

Precautions for Correct Use

- Unusual noise or vibration may occur until the load inertia is estimated or the adaptive filter stabilizes after startup, immediately after the first servo ON, or when the Realtime Autotuning Machine Rigidity Selection (Pn003) is increased. This is not an error if it disappears right away. If the unusual noise or vibration, however, continues for 3 or more reciprocating operations, take the following measures in any order you can.
  - Write the parameters used during normal operation to the EEPROM.
  - Lower the Realtime Autotuning Machine Rigidity Selection (Pn003).
  - Manually set the notch filter.
- Once unusual noise or vibration occurs, Inertia Ratio (Pn004), Torque Command Value Offset (Pn607), Forward Direction Torque Offset (Pn608), and Reverse Direction Torque Offset (Pn609) may have changed to an extreme value. In this case, also take the measures described above.
- Out of the results of realtime autotuning, the Inertia Ratio (Pn004), Torque Command Value Offset (Pn607), Forward Direction Torque Offset (Pn608) and Reverse Direction Torque Offset (Pn609) are automatically saved to the EEPROM every 30 minutes. Realtime autotuning will use this saved data as the default setting when the power supply is turned OFF and turned ON again.
- The parameter will automatically be set based on the Realtime Autotuning Machine Rigidity Setting (Pn003) if realtime autotuning is enabled.

Realtime Autotuning (RTAT) Parameter Table

Parameter number	Parameter name	AT Machine Rigidity Setting (Pn003)							
		0	1	2	3	4	5	6	7
Pn004	Inertia Ratio	Estimated load inertia ratio							
Pn100	Position Loop Gain	20	25	30	40	45	55	75	95
Pn101	Speed Loop Gain	15	20	25	30	35	45	60	75
Pn102	Speed Loop Integral Time Constant	3700	2800	2200	1900	1600	1200	900	700
Pn103	Speed Feedback Filter Time Constant	0	0	0	0	0	0	0	0
Pn104	Torque Command Filter Time Constant 1*1	1500	1100	900	800	600	500	400	300
Pn105	Position Loop Gain 2	25	30	40	45	55	70	95	120
Pn106	Speed Loop Gain 2	15	20	25	30	35	45	60	75
Pn107	Speed Loop Integral Time Constant 2	10000	10000	10000	10000	10000	10000	10000	10000
Pn108	Speed Feedback Filter Time Constant 2	0	0	0	0	0	0	0	0
Pn109	Torque Command Filter Time Constant 2*1	1500	1100	900	800	600	500	400	300
Pn110	Speed Feed-forward Amount	300	300	300	300	300	300	300	300
Pn111	Speed Feed-forward Command Filter	50	50	50	50	50	50	50	50
Pn112	Torque Feed-forward Amount	0	0	0	0	0	0	0	0
Pn113	Torque Feed-forward Command Filter	0	0	0	0	0	0	0	0
Pn114	Gain Switching Input Operating Mode Selection	1	1	1	1	1	1	1	1
Pn115	Switching Mode in Position Control	Gain Switching Enable Mode: 10 Gain Switching Disable Mode: 0							
Pn116	Gain Switching Delay Time in Position Control	30	30	30	30	30	30	30	30
Pn117	Gain Switching Level in Position Control	50	50	50	50	50	50	50	50
Pn118	Gain Switching Hysteresis in Position Control	33	33	33	33	33	33	33	33
Pn119	Position Gain Switching Time	33	33	33	33	33	33	33	33
Pn120	Switching Mode in Speed Control	0	0	0	0	0	0	0	0
Pn121	Gain Switching Delay Time in Speed Control	0	0	0	0	0	0	0	0
Pn122	Gain Switching Level in Speed Control	0	0	0	0	0	0	0	0
Pn123	Gain Switching Hysteresis in Speed Control	0	0	0	0	0	0	0	0
Pn124	Switching Mode in Torque Control	0	0	0	0	0	0	0	0
Pn125	Gain Switching Delay Time in Torque Control	0	0	0	0	0	0	0	0
Pn126	Gain Switching Level in Torque Control	0	0	0	0	0	0	0	0
Pn127	Gain Switching Hysteresis in Torque Control	0	0	0	0	0	0	0	0
Pn605	Gain 3 Effective Time	0	0	0	0	0	0	0	0
Pn606	Gain 3 Ratio Setting	100	100	100	100	100	100	100	100
Pn607	Torque Command Value Offset	If Pn002 = 3 or 4, this is the estimated offset for the torque command.							
Pn608	Forward Direction Torque Offset	If Pn002 = 3 or 4, this is the estimated offset for the torque command.							
Pn609	Reverse Direction Torque Offset	If Pn002 = 3 or 4, this is the estimated offset for the torque command.							
Pn610.0, Pn610.3	Function Expansion Setting	0	0	0	0	0	0	0	0
Pn611	Electric Current Response Setting	100	100	100	100	100	100	100	100
Pn613	Inertia Ratio 2	0	0	0	0	0	0	0	0
Pn623	Disturbance Torque Compensation Gain	0	0	0	0	0	0	0	0

Parameter number	Parameter name	AT Machine Rigidity Setting (Pn003)							
		0	1	2	3	4	5	6	7
Pn624	Disturbance Observer Filter Setting	0	0	0	0	0	0	0	0

*1. This is limited to a minimum value of 10 if a 17-bit absolute encoder is used.

Parameter number	Parameter name	AT Machine Rigidity Setting (Pn003)							
		8	9	10	11	12	13	14	15
Pn004	Inertia Ratio	Estimated load inertia ratio							
Pn100	Position Loop Gain	115	140	175	320	390	480	630	720
Pn101	Speed Loop Gain	90	110	140	180	220	270	350	400
Pn102	Speed Loop Integral Time Constant	600	500	400	310	250	210	160	140
Pn103	Speed Feedback Filter Time Constant	0	0	0	0	0	0	0	0
Pn104	Torque Command Filter Time Constant 1*1	300	200	200	126	103	84	65	57
Pn105	Position Loop Gain 2	140	175	220	380	460	570	730	840
Pn106	Speed Loop Gain 2	90	110	140	180	220	270	350	400
Pn107	Speed Loop Integral Time Constant 2	10000	10000	10000	10000	10000	10000	10000	10000
Pn108	Speed Feedback Filter Time Constant 2	0	0	0	0	0	0	0	0
Pn109	Torque Command Filter Time Constant 2*1	300	200	200	126	103	84	65	57
Pn110	Speed Feed-forward Amount	300	300	300	300	300	300	300	300
Pn111	Speed Feed-forward Command Filter	50	50	50	50	50	50	50	50
Pn112	Torque Feed-forward Amount	0	0	0	0	0	0	0	0
Pn113	Torque Feed-forward Command Filter	0	0	0	0	0	0	0	0
Pn114	Gain Switching Input Operating Mode Selection	1	1	1	1	1	1	1	1
Pn115	Switching Mode in Position Control	Gain Switching Enable Mode: 10 Gain Switching Disable Mode: 0							
Pn116	Gain Switching Delay Time in Position Control	30	30	30	30	30	30	30	30
Pn117	Gain Switching Level in Position Control	50	50	50	50	50	50	50	50
Pn118	Gain Switching Hysteresis in Position Control	33	33	33	33	33	33	33	33
Pn119	Position Gain Switching Time	33	33	33	33	33	33	33	33
Pn120	Switching Mode in Speed Control	0	0	0	0	0	0	0	0
Pn121	Gain Switching Delay Time in Speed Control	0	0	0	0	0	0	0	0
Pn122	Gain Switching Level in Speed Control	0	0	0	0	0	0	0	0
Pn123	Gain Switching Hysteresis in Speed Control	0	0	0	0	0	0	0	0
Pn124	Switching Mode in Torque Control	0	0	0	0	0	0	0	0
Pn125	Gain Switching Delay Time in Torque Control	0	0	0	0	0	0	0	0
Pn126	Gain Switching Level in Torque Control	0	0	0	0	0	0	0	0
Pn127	Gain Switching Hysteresis in Torque Control	0	0	0	0	0	0	0	0
Pn605	Gain 3 Effective Time	0	0	0	0	0	0	0	0
Pn606	Gain 3 Ratio Setting	100	100	100	100	100	100	100	100
Pn607	Torque Command Value Offset	If Pn002 = 3 or 4, this is the estimated offset for the torque command.							
Pn608	Forward Direction Torque Offset	If Pn002 = 3 or 4, this is the estimated offset for the torque command.							
Pn609	Reverse Direction Torque Offset	If Pn002 = 3 or 4, this is the estimated offset for the torque command.							
Pn610.0, Pn610.3	Function Expansion Setting	0	0	0	0	0	0	0	0

Parameter number	Parameter name	AT Machine Rigidity Setting (Pn003)							
		8	9	10	11	12	13	14	15
Pn611	Electric Current Response Setting	100	100	100	100	100	100	100	100
Pn613	Inertia Ratio 2	0	0	0	0	0	0	0	0
Pn623	Disturbance Torque Compensation Gain	0	0	0	0	0	0	0	0
Pn624	Disturbance Observer Filter Setting	0	0	0	0	0	0	0	0

*1. This is limited to a minimum value of 10 if a 17-bit absolute encoder is used.

Parameter number	Parameter name	AT Machine Rigidity Setting (Pn003)							
		16	17	18	19	20	21	22	23
Pn004	Inertia Ratio	Estimated load inertia ratio							
Pn100	Position Loop Gain	900	1080	1350	1620	2060	2510	3050	3770
Pn101	Speed Loop Gain	500	600	750	900	1150	1400	1700	2100
Pn102	Speed Loop Integral Time Constant	120	110	90	80	70	60	50	40
Pn103	Speed Feedback Filter Time Constant	0	0	0	0	0	0	0	0
Pn104	Torque Command Filter Time Constant 1*1	45	38	30	25	20	16	13	11
Pn105	Position Loop Gain 2	1050	1260	1570	1880	2410	2930	3560	4400
Pn106	Speed Loop Gain 2	500	600	750	900	1150	1400	1700	2100
Pn107	Speed Loop Integral Time Constant 2	10000	10000	10000	10000	10000	10000	10000	10000
Pn108	Speed Feedback Filter Time Constant 2	0	0	0	0	0	0	0	0
Pn109	Torque Command Filter Time Constant 2*1	45	38	30	25	20	16	13	11
Pn110	Speed Feed-forward Amount	300	300	300	300	300	300	300	300
Pn111	Speed Feed-forward Command Filter	50	50	50	50	50	50	50	50
Pn112	Torque Feed-forward Amount	0	0	0	0	0	0	0	0
Pn113	Torque Feed-forward Command Filter	0	0	0	0	0	0	0	0
Pn114	Gain Switching Input Operating Mode Selection	1	1	1	1	1	1	1	1
Pn115	Switching Mode in Position Control	Gain Switching Enable Mode: 10 Gain Switching Disable Mode: 0							
Pn116	Gain Switching Delay Time in Position Control	30	30	30	30	30	30	30	30
Pn117	Gain Switching Level in Position Control	50	50	50	50	50	50	50	50
Pn118	Gain Switching Hysteresis in Position Control	33	33	33	33	33	33	33	33
Pn119	Position Gain Switching Time	33	33	33	33	33	33	33	33
Pn120	Switching Mode in Speed Control	0	0	0	0	0	0	0	0
Pn121	Gain Switching Delay Time in Speed Control	0	0	0	0	0	0	0	0
Pn122	Gain Switching Level in Speed Control	0	0	0	0	0	0	0	0
Pn123	Gain Switching Hysteresis in Speed Control	0	0	0	0	0	0	0	0
Pn124	Switching Mode in Torque Control	0	0	0	0	0	0	0	0
Pn125	Gain Switching Delay Time in Torque Control	0	0	0	0	0	0	0	0
Pn126	Gain Switching Level in Torque Control	0	0	0	0	0	0	0	0
Pn127	Gain Switching Hysteresis in Torque Control	0	0	0	0	0	0	0	0
Pn605	Gain 3 Effective Time	0	0	0	0	0	0	0	0
Pn606	Gain 3 Ratio Setting	100	100	100	100	100	100	100	100
Pn607	Torque Command Value Offset	If Pn002 = 3 or 4, this is the estimated offset for the torque command.							
Pn608	Forward Direction Torque Offset	If Pn002 = 3 or 4, this is the estimated offset for the torque command.							
Pn609	Reverse Direction Torque Offset	If Pn002 = 3 or 4, this is the estimated offset for the torque command.							
Pn610.0, Pn610.3	Function Expansion Setting	0	0	0	0	0	0	0	0
Pn611	Electric Current Response Setting	100	100	100	100	100	100	100	100
Pn613	Inertia Ratio 2	0	0	0	0	0	0	0	0
Pn623	Disturbance Torque Compensation Gain	0	0	0	0	0	0	0	0
Pn624	Disturbance Observer Filter Setting	0	0	0	0	0	0	0	0

*1. This is limited to a minimum value of 10 if a 17-bit absolute encoder is used.

Parameter number	Parameter name	AT Machine Rigidity Setting (Pn003)							
		24	25	26	27	28	29	30	31
Pn004	Inertia Ratio	Estimated load inertia ratio							
Pn100	Position Loop Gain	4490	5000	5600	6100	6600	7200	8100	9000
Pn101	Speed Loop Gain	2500	2800	3100	3400	3700	4000	4500	5000
Pn102	Speed Loop Integral Time Constant	40	35	30	30	25	25	20	20
Pn103	Speed Feedback Filter Time Constant	0	0	0	0	0	0	0	0
Pn104	Torque Command Filter Time Constant 1*1	9	8	7	7	6	6	5	5
Pn105	Position Loop Gain 2	5240	5900	6500	7100	7700	8400	9400	10500
Pn106	Speed Loop Gain 2	2500	2800	3100	3400	3700	4000	4500	5000
Pn107	Speed Loop Integral Time Constant 2	10000	10000	10000	10000	10000	10000	10000	10000
Pn108	Speed Feedback Filter Time Constant 2	0	0	0	0	0	0	0	0
Pn109	Torque Command Filter Time Constant 2*1	9	8	7	7	6	6	5	5
Pn110	Speed Feed-forward Amount	300	300	300	300	300	300	300	300
Pn111	Speed Feed-forward Command Filter	50	50	50	50	50	50	50	50
Pn112	Torque Feed-forward Amount	0	0	0	0	0	0	0	0
Pn113	Torque Feed-forward Command Filter	0	0	0	0	0	0	0	0
Pn114	Gain Switching Input Operating Mode Selection	1	1	1	1	1	1	1	1
Pn115	Switching Mode in Position Control	Gain Switching Enable Mode: 10 GAIN Switching Disable Mode: 0							
Pn116	Gain Switching Delay Time in Position Control	30	30	30	30	30	30	30	30
Pn117	Gain Switching Level in Position Control	50	50	50	50	50	50	50	50
Pn118	Gain Switching Hysteresis in Position Control	33	33	33	33	33	33	33	33
Pn119	Position Gain Switching Time	33	33	33	33	33	33	33	33
Pn120	Switching Mode in Speed Control	0	0	0	0	0	0	0	0
Pn121	Gain Switching Delay Time in Speed Control	0	0	0	0	0	0	0	0
Pn122	Gain Switching Level in Speed Control	0	0	0	0	0	0	0	0
Pn123	Gain Switching Hysteresis in Speed Control	0	0	0	0	0	0	0	0
Pn124	Switching Mode in Torque Control	0	0	0	0	0	0	0	0
Pn125	Gain Switching Delay Time in Torque Control	0	0	0	0	0	0	0	0
Pn126	Gain Switching Level in Torque Control	0	0	0	0	0	0	0	0
Pn127	Gain Switching Hysteresis in Torque Control	0	0	0	0	0	0	0	0
Pn605	Gain 3 Effective Time	0	0	0	0	0	0	0	0
Pn606	Gain 3 Ratio Setting	100	100	100	100	100	100	100	100
Pn607	Torque Command Value Offset	If Pn002 = 3 or 4, this is the estimated offset for the torque command.							
Pn608	Forward Direction Torque Offset	If Pn002 = 3 or 4, this is the estimated offset for the torque command.							
Pn609	Reverse Direction Torque Offset	If Pn002 = 3 or 4, this is the estimated offset for the torque command.							
Pn610.0, Pn610.3	Function Expansion Setting	0	0	0	0	0	0	0	0
Pn611	Electric Current Response Setting	100	100	100	100	100	100	100	100
Pn613	Inertia Ratio 2	0	0	0	0	0	0	0	0
Pn623	Disturbance Torque Compensation Gain	0	0	0	0	0	0	0	0
Pn624	Disturbance Observer Filter Setting	0	0	0	0	0	0	0	0

*1. This is limited to a minimum value of 10 if a 17-bit absolute encoder is used.

- The parameters Pn103, Pn108, Pn110 to Pn127, Pn605, Pn606, Pn610, Pn611, Pn613, Pn623 and Pn624 are set to fixed values.

10-3 Manual Tuning

Basic Settings

As described before, the OMNUC G5-series Servo Drives have a realtime autotuning function. Readjustment, however, is required if realtime autotuning cannot adjust the gain properly for same reasons: there is a restriction by load conditions, or a necessity to ensue optimum responsiveness and stability for each load.
This section describes how to perform manual tuning for each control mode and function.

Before Manual Setting

More reliable adjustment can be performed quickly by using waveform monitoring with the data tracing function of the CX-Drive or by measuring the analog voltage waveform with the monitor function.

Analog Monitor Output

The actual motor speed, command speed, torque, and number of accumulated pulses can be measured in the analog voltage level using an oscilloscope or other device. The type of signal to output and the output voltage level are set with Analog Monitor 1 Selection (Pn416) and Analog Monitor 2 Selection (Pn418) settings. For details, refer to "12-2 Parameter List" (P.12-11).

CX-Drive Data Tracing Function

Commands to the motor and motor operation (speed, torque command, and position error) can be displayed on a computer as waveforms. Refer to the *CX-Drive Operation Manual* (Cat. No. W453).

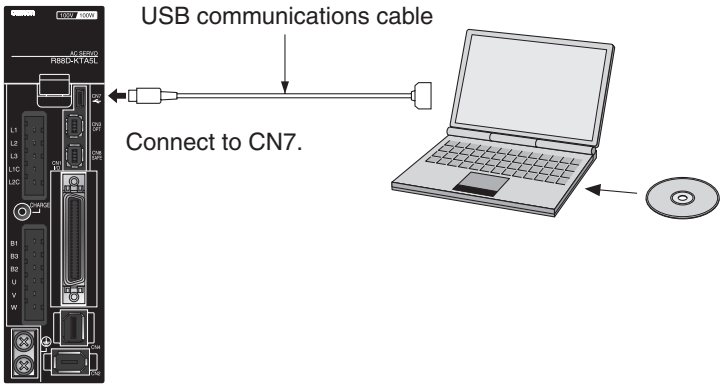

Position Control/Fully-closed Control Mode Adjustment

Use the following procedure to perform the adjustment in position control for the Servo Drive.

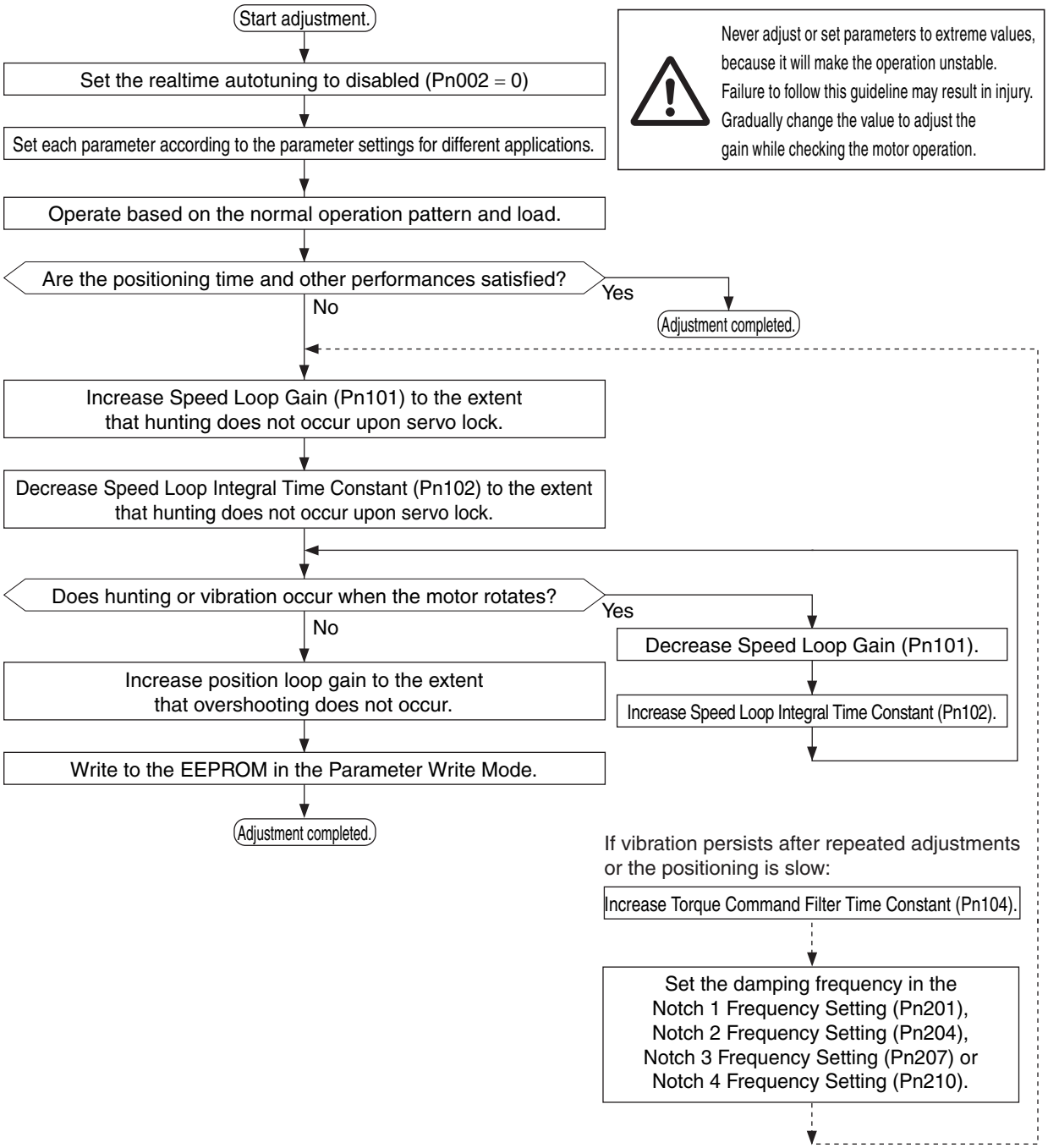

Speed Control Mode Adjustment

Adjustments in speed control for the OMNUC G5 Series are very similar to Position Control Mode adjustment.
Use the following procedure to perform the adjustment.

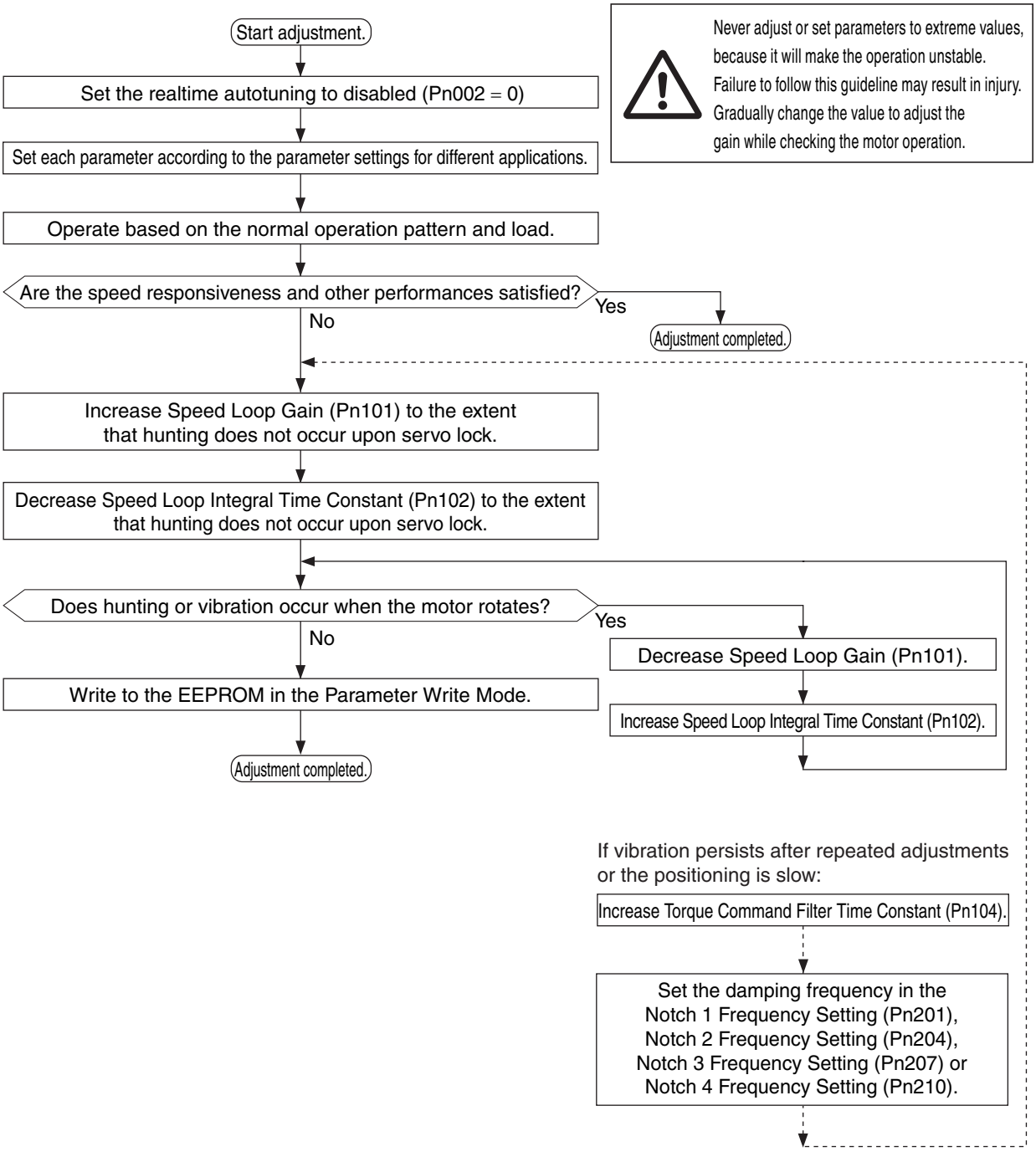

Servo Manual Tuning Method

The following 4 parameters are the basic servo adjustment parameters.
If desired operation characteristics are obtained by adjusting the following 4 parameters, the adjustments of other parameters are not necessary.

Parameter number	Parameter name	Default setting	Parameter number 2
Pn100	Position Loop Gain	48.0 [1/s]	Pn105
Pn101	Speed Loop Gain	27.0 Hz	Pn106
Pn102	Speed Loop Integral Time Constant	21.0 ms	Pn107
Pn104	Torque Command Filter Time Constant	0.84 ms	Pn109

Adjustment of Each Parameter

The control loop for the servo consists of, from the outside, a position loop, speed loop and current loop.
The inner loop is affected by the outer loop, and the outer loop is affected by the inner loop.
What determines the default setting includes the structure and the rigidity of the machine, and the inertia ratio.
Guide of each parameter for different applications is as follows.

Parameter Settings for Different Applications

Application name	Inertia	Rigidity	Position loop gain [1/s]	Speed loop gain [Hz]	Speed loop integral time constant	Torque command filter time constant [x 0.01 ms]
Ball screw horizontal	Large	Low	20	140	35	160
Ball screw horizontal	Medium	Medium	40	80	20	100
Ball screw horizontal	Small	High	80	60	15	80
Ball screw vertical	Large	Low	20	160	45	160
Ball screw vertical	Medium	Medium	40	80	30	120
Ball screw vertical	Small	High	60	60	20	100
Ball screw nut rotation horizontal	Large	Low	20	140	40	160
Ball screw nut rotation horizontal	Medium	Medium	40	100	30	120
Ball screw nut rotation vertical	Large	Low	20	160	45	160
Ball screw nut rotation vertical	Medium	Medium	40	120	25	120
Timing belt	Large	Low	20	160	60	160
Timing belt	Medium	Medium	30	120	40	120
Rack and pinion drives	Large	Low	20	160	60	160
Rack and pinion drives	Large	Medium	30	120	40	120
Rack and pinion drives	Medium	Medium	40	100	20	100
Index table	Large	Medium	40	120	25	120
Index table	Small	High	80	120	20	100
Robot arm cylinder	Large	Low	15	160	60	160
Robot arm cylinder	Medium	Medium	25	120	40	120
Other general-purpose	Medium	Medium	30	100	30	150

• Inertia Ratio (Pn004) is when fixed at 300%.

Inertia guide

The inertia is small.	5 times the rotor inertia max.
The inertia is medium.	5 to 10 times the rotor inertia max.
The inertia is large.	10 to 20 times the rotor inertia max.

Pn100 and Pn105 Position Loop Gain

This loop controls the number of pulses from encoder to be the designated number of pulses. This is called an error counter, and when the pulse is equal to or lower than the specified value, positioning is completed and the signal is output.
The ratio of maximum speed used and error counter is called a position loop gain.

$$\text{Position loop gain [1/s]} = \frac{\text{Command maximum speed [pps]}}{\text{Error counter accumulated pulse (P)}}$$

For the position loop gain, use the inverse of Speed Loop Integral Time Constant (Pn102) as a guide for setting. Setting Pn102 to 100 ms results in 10 [1/s].
There will be no overshooting under this condition. To quicken positioning, increase the value of position loop gain. If the value is too large, overshooting or vibration will occur. In such cases, set the value smaller.
If the speed loop or the current loop is vibrating, adjusting the position loop does not eliminate the vibration.
Response to the position loop gain adjustment is illustrated below.

- If the position loop gain is high, an overshooting occurs.

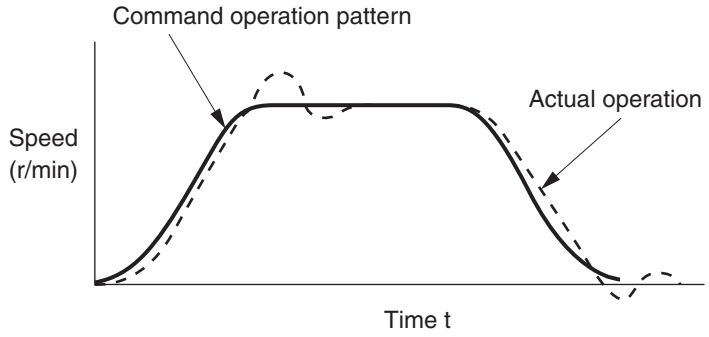

- If the position loop gain is low, positioning completion speed becomes slow.

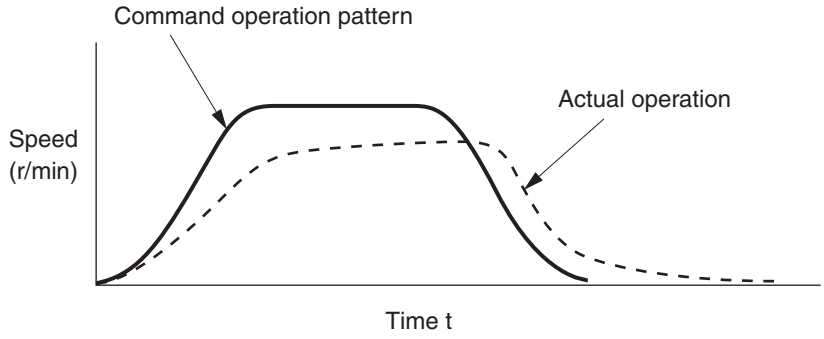

Pn101 and Pn106 Speed Loop Gain

The speed loop gain determines the responsiveness of the servo.
This value becomes the response frequency if the Inertia Ratio (Pn004) is set correctly.
Increasing the value of the speed loop gain improves the responsiveness and quickens positioning, but vibration is more likely to occur. Adjustment must be made so vibration will not occur.
This is related to Speed Loop Integral Time Constant (Pn102), and by increasing the integral time constant, the speed loop gain value can be increased.

- If the speed loop gain is low, the speed response becomes slow and a large overshooting occurs. In such case, increase the speed loop gain.

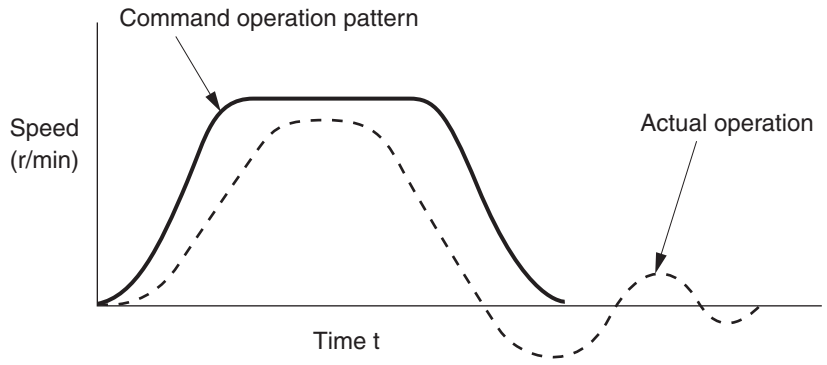

- If the speed loop gain is high, vibrations are more likely to occur. Vibration or resonance may not disappear.
  In such case, decrease the speed loop gain.

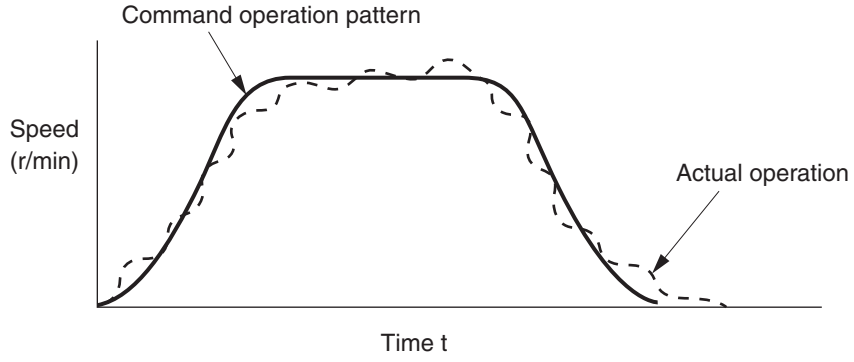

Pn102 and Pn107 Speed Loop Integral Time Constant

The speed loop integral time constant also determines the responsiveness of the servo.

- If the speed loop integral time constant is low, vibration or resonance occurs.
  In such case, increase the speed loop integral time constant.

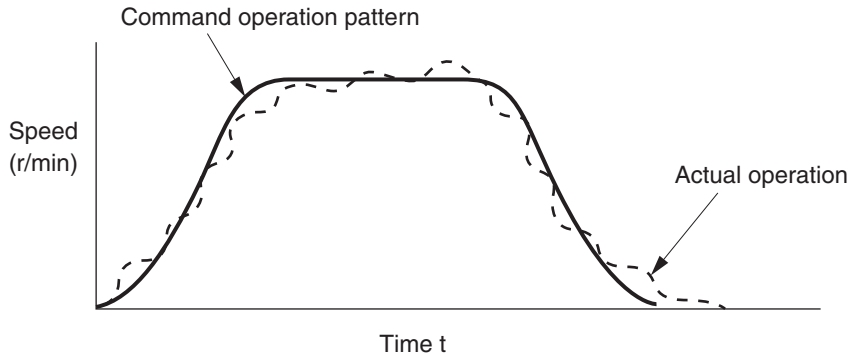

- If the speed loop integral time constant is high, the response is delayed. The servo rigidity becomes weak.
  In such case, decrease the speed loop integral time constant.

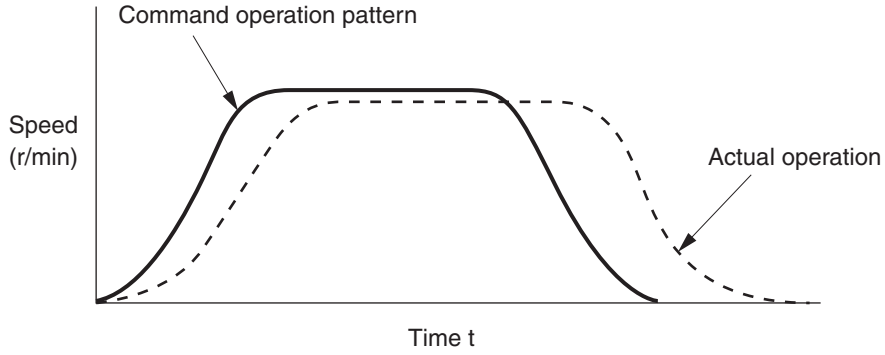

Pn104 and Pn109 Torque Command Filter Time Constant (Current Loop Input Adjustment)

The torque command filter applies a filter so the current command from the speed loop becomes smooth. The result is a smooth current flow which suppresses vibration.
The default setting of the filter time constant is 84 (0.84 ms).
Increase the value to reduce vibration. Increasing the value slows the response.
As a guide, aim for about 1/25 of the Speed Loop Integral Time Constant (Pn102).
Also, the torque command filter reduces vibration due to the machine rigidity.
This is related to Speed Loop Gain (Pn101), and if Pn101 is too large, increasing the torque command filter time constant does not reduce vibration.
If there is machine resonance such as with the ball screw, vibration is reduced by using notch filters such as Pn201, Pn204, Pn207 and Pn210. Or, enable the adaptive filter.

Other Adjustments

If the torque loop is saturated because the acceleration time is short or the load torque is large, an overshooting occurs for the speed response. In such case, increase the acceleration time to prevent the torque from saturating.

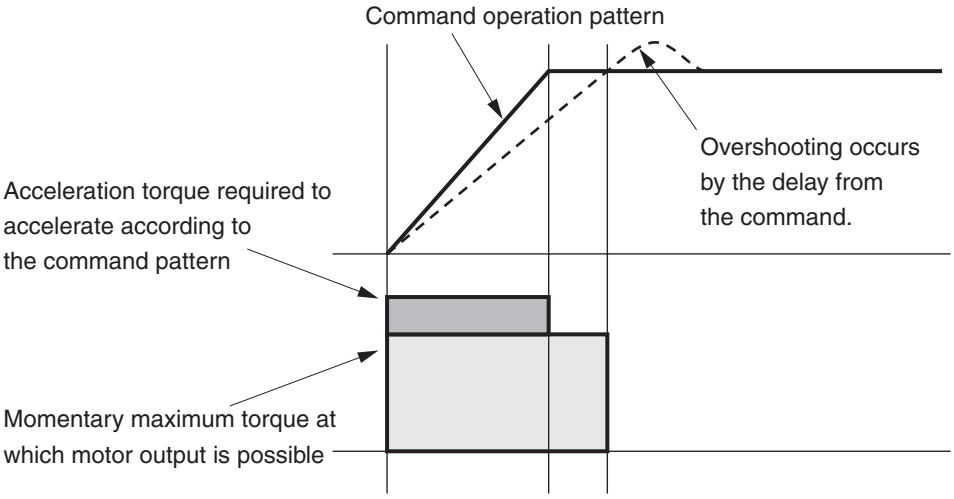

Torque Control Mode Adjustment

This is a torque control based on the speed control loop where the speed limit is the speed limit value from Speed Limit (Pn304, Pn305, Pn306 or Pn307). This section describes the settings for these speed limit values.

Setting Speed Limit Values

- If Torque Command/Speed Limit Selection (Pn317) is 0, speed limit is the value set by Speed Limit Value Setting (Pn321) and Reverse Direction Speed Limit Value Setting (Pn322). If Torque Command/Speed Limit Selection (Pn317) is 1, the speed limit is the value obtained by converting the voltage applied to analog input 1 with Torque Command Scale (Pn319).
- When the motor speed approaches the speed limit value, the speed control switches to that using Speed Limit Value Setting (Pn321) and Reverse Direction Speed Limit Value Setting (Pn322) as commands.
- To have a stable operation while the speed is limited, the parameter should be set according to "Speed Control Mode Adjustment".
- The torque may not be produced as specified by the torque command because the input to the torque limit section is small, when the speed limit values in Speed Limit Value Setting (Pn321) and Reverse Direction Speed Limit Value Setting (Pn322) are too low, when the speed loop gain is too low, or when the speed loop integral time constant is 10,000 (disabled).

11

Troubleshooting and Maintenance

This chapter explains the items to check when problems occur, error diagnosis using the alarm LED display and measures, error diagnosis based on the operating condition and measures, and periodic maintenance.

11-1 Troubleshooting 11-1

Preliminary Checks When a Problem Occurs 11-1
Precautions When a Problem Occurs 11-2
Replacing the Servomotor or Servo Drive 11-3

11-2 Warning List 11-4

11-3 Alarm List 11-5

11-4 Troubleshooting 11-10

Error Diagnosis Using the Alarm Displays 11-10
Troubleshooting Using the Operation Status 11-17

11-5 Periodic Maintenance 11-21

Servomotor Life Expectancy 11-21
Servo Drive Life Expectancy 11-22
Replacing the Absolute Encoder Battery 11-23

11-1 Troubleshooting

Preliminary Checks When a Problem Occurs

This section explains the preliminary checks and analytical software required to determine the cause of a problem if one occurs.

Checking the Power Supply Voltage

- Check the voltage at the power supply input terminals.
  Main Circuit Power Supply Input Terminals (L1, L2, L3)

R88D-KT□L	(50 to 400 W)	: Single-phase 100 to 120 VAC (85 to 132 V) 50/60 Hz
R88D-KT□H	(100 W to 1.5 kW)	: Single-phase 200 to 240 VAC (170 to 264 V) 50/60 Hz
	(750 W to 1.5 kW)	: 3-phase 200 to 240 VAC (170 to 264 V) 50/60 Hz
	(2 to 5 kW)	: 3-phase 200 to 230 VAC (170 to 253 V) 50/60 Hz
R88D-KT□F	(750 W to 5 kW)	: 3-phase 380 to 480 VAC (323 to 528 V) 50/60 Hz

  Control Circuit Power Supply Input Terminals (L1C, L2C)

R88D-KT□L	(50 to 400 W)	: Single-phase 100 to 120 VAC (85 to 132 V) 50/60 Hz
R88D-KT□H	(100 W to 1.5 kW)	: Single-phase 200 to 240 VAC (170 to 264 V) 50/60 Hz
	(2 to 5 kW)	: Single-phase 200 to 230 VAC (170 to 253 V) 50/60 Hz
R88D-KT□F	(750 W to 5 kW)	: 24 VDC (21.6 to 26.4 V)

  If the voltage is out of range, there is a risk of operation failure. Be sure that the power supply is within the specified range.
- Check the voltage of the sequence input power supply (+24 VIN terminal (CN1 pin 7)).
  It must be between 11 and 25 VDC.
  If the voltage is out of range, there is a risk of operation failure. Be sure that the power supply is within the specified range.

Checking Whether an Alarm Has Occurred

- Make an analysis using the 7-segment LED display area in the front of the Servo Drive and using the Operation keys.
- When an alarm has occurred
  … Check the alarm display that is displayed (□□) and make an analysis based on the alarm that is indicated.
- When an alarm has not occurred
  … Make an analysis according to the error conditions.
- In either case, refer to "11-4 Troubleshooting" (P.11-10) for details.

Precautions When a Problem Occurs

When checking and verifying I/O after a problem has occurred, the Servo Drive may suddenly start to operate or suddenly stop, so always take the following precautions.
You should assume that anything not described in this manual is not possible with this product.

Precautions

- Disconnect the wiring before checking for cable breakage. If you test conduction with the cable connected, test results may not be accurate due to conduction via bypassing circuit.
- If the encoder signal is lost, the motor may run away, or an alarm may occur. Be sure to disconnect the motor from the mechanical system before checking the encoder signal.
- When measuring the encoder output, perform the measurement based on the SENGND (CN1 pin 13).
  When an oscilloscope is used for measurement, it will not be affected by noise if measurements are performed using the differential between CH1 and CH2.
- When performing tests, first check that there are no persons in the vicinity of the equipment, and that the equipment will not be damaged even if the motor runs away.
  Before performing the tests, verify that you can immediately stop the machine using an emergency stop even if it runs away.

Replacing the Servomotor or Servo Drive

Use the following procedure to replace the Servomotor or Servo Drive.

Replacing the Servomotor

1. Replace the motor.

2. Perform origin adjustment (for position control).

- When the motor is replaced, the motor's origin position (phase Z) may deviate, so origin adjustment must be performed.
- Refer to the position controller's manual for details on performing origin adjustment.

3. Set up the absolute encoder.

- If a motor with an absolute encoder is used, the absolute value data in the absolute encoder is cleared when the motor is replaced, so setup is again required.
  The multi-rotation data will be different from before it was replaced, so initialize the Motion Control Unit settings.
- For details, refer to "Absolute Encoder Setup"(P.9-4).

Replacing the Servo Drive

1. Copy the parameters.

Use the Operation keys on the Servo Drive to write down all the contents of parameter settings.

2. Replace the Servo Drive.

3. Set the parameters.

Use the Operation keys on the Servo Drive to set all the parameters.

4. Set up the absolute encoder.

- If a motor with an absolute encoder is used, the absolute value data in the absolute encoder is cleared when the Servo Drive is replaced, so setup is again required.
  The multi-rotation data will be different from before it was replaced, so initialize the Motion Control Unit settings.
- For details, refer to "Absolute Encoder Setup"(P.9-4).

11-2 Warning List

This is a function to output a warning signal before the protective function operates to notify the overload and other statuses in advance.
Set the warning output type to Warning Output Selection 1 (Pn440) and Waning Output Selection 2 (Pn441).

Precautions for Correct Use

- Each warning automatically returns to the status before it occurred once the system recovers from the error. However, for the time set in the Warning Latch Hold Time Selection (Pn627), the warning status will be held. To clear the warning during the latch hold time, do so by performing the same procedures as alarm clear.

Warning List

Warning number	Warning name	Latch*1	Warning condition	Warning Output Selection (Pn440, Pn441) *2	Warning Mask Setting (Pn638)
A0	Overload warning	√	The load ratio is 85% or more of the protection level.	1	bit 7
A1	Excessive regeneration warning	√	The regeneration load ratio is 85% or more of the protection level.	2	bit 5
A2	Battery warning	Always fixed with no time limit	Battery voltage is 3.2 V or less.	3	bit 0
A3	Fan warning	√	The fan stops for 1 second.	4	bit 6
A4	Encoder communications warning	√	Encoder communications errors occurred in series more than the specified value.	5	bit 4
A5	Encoder overheating warning	√	The encoder temperature exceeded the specified value.	6	bit 3
A6	Vibration detection warning	√	Vibration is detected.	7	bit 9
A7	Life expectancy warning	Always fixed with no time limit	The life expectancy of the capacitor or the fan is shorter than the specified value.	8	bit 2
A8	External encoder error warning	√	The external encoder detected a warning.	9	bit 8
A9	External encoder communications warning	√	The external encoder has more communications errors in series than the specified value.	10	bit 10

*1. The "√" fields can be set to 1 to 10 s in the Warning Latch Hold Time Selection (Pn627) or to the no-time limit setting. However, the battery warning is fixed with no time limit.

*2. Select the type of warning to be output in warning output 1 (WARN1) and warning output 2 (WARN2) in the Warning Output Selection 1 (Pn440) and Warning Output Selection 2 (Pn441).If you set this to 0, all warning types will be output.Do not set it to a value other than above.

*3. Each warning detection can be masked using the Warning Mask Setting (Pn638). The corresponding bits are shown in the table.
The warning detection is masked when the bit = 1.

11-3 Alarm List

If the drive detects an error, the alarm output (ALM) will turn ON, the power drive circuit in the drive will turn OFF, and the alarm code will be displayed.

Precautions for Correct Use

- Refer to "Error Diagnosis Using the Alarm Displays"(P.11-10) for appropriate alarm measures.
- Reset the alarm using one of the following methods. Remove the cause of the alarm first.
  - Input the alarm reset input (RESET) signal.
  - Turn OFF the power supply, then turn it ON again.
  - Execute the alarm reset on the Parameter Unit.

  However, some alarms can only be reset by turning the power supply OFF then ON again. Refer to the next item "Alarm List".
- If you reset an alarm while the operation command (RUN) is turned ON, the Servo Drive will start operation as soon as the alarm is released, which is dangerous. Be sure to turn OFF the RUN before clearing the alarm.
  If the RUN is always ON, first check safety sufficiently before clearing the alarm.
- When an alarm occurs, the servo drive latches the status of the servo drive just before the alarm occurrence. Those latched values can be read with the software tool for diagnostics. Refer to the CX-Drive Operation Manual (Cat. No. W453) for details.
- The stop mode in case of an alarm may vary depending on the “Immediate stop” attribute in each alarm.

Alarm List

Alarm number		Error detection function	Detection details and probable cause	Attribute		
Main	Sub			History	Can be cleared	Immediate stop *1
11	0	Control power supply undervoltage	The DC voltage of the main circuit fell below the specified value.	–	√	–
12	0	Overvoltage	The DC voltage in the main circuit is abnormally high.	√	√	–
13	0	Main power supply undervoltage (Insufficient voltage between P and N)	The DC voltage of the main circuit is low.	–	√	–
	1	Main power supply undervoltage (AC cut-off detection)	A location was detected where the main circuit AC power supply is cut off.	–	√	–
14	0	Overcurrent	Overcurrent flowed to the IGBT.	√	–	–
	1	IPM error	Motor power line ground fault or short circuit.	√	–	–
15	0	Servo Drive overheat	The temperature of the Servo Drive radiator exceeded the specified value.	√	–	√
16	0	Overload	Operation was performed with torque significantly exceeding the rating for several seconds to several tens of seconds.	√	√	–
18	0	Regeneration overload	The regenerative energy exceeds the processing capacity of the Regeneration Resistor.	√	–	√
	1	Regeneration Tr error	An error was detected in a Servo Drive regeneration drive Tr.	√	–	–
21	0	Encoder communications disconnection error	The encoder wiring is disconnected.	√	–	–
	1	Encoder communications error	An encoder communications error was detected.	√	–	–
23	0	Encoder communications data error	Communications cannot be performed between the encoder and the Servo Drive.	√	–	–
24	0	Error counter overflow	The error counter accumulated pulse exceeds the set value for the Error Counter Overflow Level (Pn014).	√	√	√
	1	Excessive speed error	The difference between the internal position command speed and the actual speed (i.e., the speed error) exceeded the Excessive Speed Error Setting (Pn602).	√	√	√
25	0	Excessive hybrid error	During fully-closed control, difference between position of load from external encoder and position of motor due to encoder was larger than the pulse number set by Excessive Hybrid Error Setting (Pn332).	√	–	√

Alarm number		Error detection function	Detection details and probable cause	Attribute		
Main	Sub			History	Can be cleared	Immediate stop *1
26	0	Overspeed	The motor rotation speed exceeded the value set on the Overspeed Level set (Pn513).	√	√	√
	1	Overspeed 2	The motor rotation speed exceeded the value set on the Overspeed Level set 2 (Pn615).	√	√	–
27	0	Command pulse frequency error	A command pulse frequency error was detected.	√	√	√
	2	Command pulse multiplier error	The command pulse divider or multiplier is not suitable.	√	√	√
28	0	Pulse regeneration error	The pulse regeneration output frequency exceeded the limit.	√	√	√
29	0	Error counter overflow	Error counter value based on the encoder pulse reference exceeded 2^{29} (536,870,912).	√	√	–
30 (st)	0	Safety input error	Safety input signal turned OFF.	–	√	–
33	0	Interface input duplicate allocation error 1	A duplicate setting for the interface input signals was detected.	√	–	–
	1	Interface input duplicate allocation error 2		√	–	–
	2	Interface input function number error 1	An undefined number was detected in the interface input signal allocations.	√	–	–
	3	Interface input function number error 2		√	–	–
	4	Interface output function number error 1	An undefined number was detected in the interface output signal allocations.	√	–	–
	5	Interface output function number error 2		√	–	–
	6	Counter reset allocation error	The counter reset function was allocated to something other than input signal SI7.	√	–	–
	7	Command pulse prohibition input allocation error	The command pulse prohibition input function was allocated to something other than input signal SI10.	√	–	–
34	0	Overrun limit error	The motor exceeded the allowable operating range set in the Overrun Limit Setting (Pn514) with respect to the position command input.	√	√	–
36	0 to 2	Parameter error	Data in the Parameter Save area was corrupted when the power supply was turned ON and data was read from the EEPROM.	–	–	–
37	0 to 2	Parameters destruction	The checksum for the data read from the EEPROM when the power supply was turned ON does not match.	–	–	–
38	0	Drive prohibition input error	The forward drive prohibition and reverse drive prohibition inputs are both turned OFF.	–	√	–

Alarm number		Error detection function	Detection details and probable cause	Attribute		
Main	Sub			History	Can be cleared	Immediate stop *1
39	0	Excessive analog input 1	A current exceeding the Speed Command/Torque Command Input Overflow Level Setting (Pn424, Pn427 or Pn430) was applied to the analog command input (pin 14).	√	√	√
	1	Excessive analog input 2		√	√	√
	2	Excessive analog input 3		√	√	√
40	0	Absolute encoder system down error **ABS**	The voltage supplied to the absolute encoder is lower than the specified value.	√	√	–
41	0	Absolute encoder counter overflow error **ABS**	The multi-rotation counter of the absolute encoder exceeds the specified value.	√	–	–
42	0	Absolute encoder overspeed error **ABS**	The motor rotation speed exceeds the specified value when only the battery power supply of the absolute encoder is used.	√	√	–
43	0	Encoder initialization error	An encoder initialization error was detected.	√	–	–
44	0	Absolute encoder 1-rotation counter error **ABS**	A 1-turn counter error was detected.	√	–	–
45	0	Absolute encoder multi-rotation counter error **ABS**	A multi-rotation counter error or phase-AB signal error was detected.	√	–	–
47	0	Absolute encoder status error **ABS**	The rotation of the absolute encoder is higher than the specified value.	√	–	–
48	0	Encoder phase-Z error	A serial incremental encoder phase Z pulse irregularity was detected.	√	–	–
49	0	Encoder CS signal error	A logic error was detected in the CS signal for serial incremental encoder.	√	–	–
50	0	External encoder connection error	An error was detected in external encoder connection.	√	–	–
	1	External encoder communications data error	An error was detected in external encoder communications data.	√	–	–
51	0	External encoder status error 0	An external encoder alarm code was detected.	√	–	–
	1	External encoder status error 1		√	–	–
	2	External encoder status error 2		√	–	–
	3	External encoder status error 3		√	–	–
	4	External encoder status error 4		√	–	–
	5	External encoder status error 5		√	–	–

Alarm number		Error detection function	Detection details and probable cause	Attribute		
Main	Sub			History	Can be cleared	Immediate stop *1
55	0	Phase-A connection error	An error was detected in the external encoder phase A connection.	√	–	–
	1	Phase-B connection error	An error was detected in the external encoder phase B connection.	√	–	–
	2	Phase-Z connection error	An error was detected in the external encoder phase Z connection.	√	–	–
87	0	Forced alarm input error	The forced alarm input signal was input.	–	√	–
95	0 to 4	Motor non-conformity	The combination of the Servomotor and Servo Drive is not appropriate. The encoder was not connected when the power supply was turned ON.	–	–	–
Other numbers		Other errors				

*1. An immediate stop means an alarm causing an immediate stop when the Pn510 "Stop Selection for Alarm Detection" is set to 4 to 7. For details, refer to "Stop Selection for Alarm Detection"(P.8-51).

11-4 Troubleshooting

If an error occurs in the machine, determine the error conditions from the alarm displays and operation status, identify the cause of the error, and take appropriate measures.

Error Diagnosis Using the Alarm Displays

Alarm number	Error conditions	Status when error occurs	Cause	Measures
11	Power supply undervoltage	Occurs when the power is turned ON.	· The power supply voltage is low. · Momentary power interruption occurred. · Power supply capacity is insufficient. · The power supply voltage is reduced because the main power supply is OFF. · The main power supply is not input.	· Increase the power supply capacity. · Change the power supply. · Turn ON the power supply.
			· Power supply capacity is insufficient.	· Increase the power supply capacity.
			· Phase loss	· Connect the phases (L1, L2, L3) of the power supply voltage correctly. · For single-phase, connect to L1 and L3 correctly.
			· The main circuit power supply is damaged. · Control PCB error.	· Replace the Servo Drive.
12	Overvoltage	Occurs when the power supply is turned ON.	· Main circuit power supply voltage is out of allowable range.	· Change the main circuit power supply voltage to within allowable range.
		Occurs when the motor is decelerating.	· Load inertia is too large.	· Calculate the regenerative energy and connect an External Regeneration Resistor with the required regeneration absorption capacity. · Extend the deceleration time.
			· Main circuit power supply voltage is out of allowable range.	· Change the main circuit power supply voltage to within allowable range.
		Occurs during descent (vertical axis).	· Gravitational torque is too large.	· Add a counterbalance to the machine to lower gravitational torque. · Reduce the descent speed. · Calculate the regenerative energy and connect an External Regeneration Resistor with the required regeneration absorption capacity.

Alarm number	Error conditions	Status when error occurs	Cause	Measures
13	Main circuit power supply undervoltage	Occurs when the servo is turned ON.	· The power supply voltage is low. · Momentary power interruption occurred. · Power supply capacity is insufficient. · The power supply voltage is reduced because the main power supply is OFF. · The main power supply is not input.	· Check the power supply capacity. · Change the power supply. · Turn ON the power supply. · Extend the Momentary Hold Time (Pn509).
		Occurs when the power supply is turned ON.	· Phase loss	· Correctly connect the phases of the power supply voltage.
				· Correctly connect the single-phase.
			· The main circuit power supply is damaged. · Control PCB damage.	· Replace the Servo Drive.
14	Overcurrent	Occurs when the servo is turned ON.	· Control PCB error	· Replace the Servo Drive.
			· The motor power line is short-circuited or ground-faulted between phases.	· Repair the short-circuited or ground-faulted power line. · Measure the insulation resistance at the motor and, if there is a short circuit, replace the motor.
			· Phase U, phase V, phase W, and the ground are wired incorrectly.	· Wire correctly.
			· Motor winding is burned out.	· Measure the winding resistance, and if the winding is burned out, replace the motor.
			· The relay for the dynamic brake has been deposited.	· Do not frequently input the operation command (RUN) input. · Do not operate the system by turning the servo ON and OFF.
			· Motor non-conformity	· Use a Servomotor that is appropriate for use with the Servo Drive.
			· The pulse input timing is too early.	· Wait at least 100 ms before inputting pulses after turning ON the operation command (RUN).
			· The resistor in the Servo Drive is abnormally overheating.	· Reduce the ambient temperature of the Servo Drive to 55°C or lower. · If the relay does not click when the power supply is turned ON, replace the Servo Drive.

Alarm number	Error conditions	Status when error occurs	Cause	Measures
15	Servo Drive overheat	Occurs during operation.	· The ambient temperature is too high. · The load is too large.	· Lower the ambient temperature. · Increase the capacity of the drive and motor. · Reduce the load. · Extend the acceleration/ deceleration times.
16	Overload	Occurs when the servo is turned ON.	· There is an error in the motor wiring (the wiring or the connections are faulty).	· Wire the Servomotor power cable correctly.
			· The electromagnetic brake is ON.	· Turn OFF the brake.
			· The Servo Drive has broken down.	· Replace the Servo Drive.
		Occurs during operation.	· The effective torque exceeds the rated torque. · The initial torque exceeds the maximum torque.	· Review the load conditions and operating conditions. · Review the motor capacity.
			· Unusual noise or vibration is caused by faulty gain adjustment.	· Adjust the gain correctly.
			· The Servo Drive has broken down.	· Replace the Servo Drive.
18	Regeneration overload	Occurs when the motor is decelerating.	· Load inertia is too large.	· Calculate the regenerative energy and connect an External Regeneration Resistor with the required regeneration absorption capacity. · Extend the deceleration time.
			· The deceleration time is too short. · The motor rotation speed is too high.	· Reduce the motor rotation speed. · Extend the deceleration time. · Calculate the regenerative energy and connect an External Regeneration Resistor with the required regeneration absorption capacity.
			· The operating limit of the External Regeneration Resistor is limited to 10% duty.	· Set Pn016 to 2. For details, refer to "Parameter Details".
		Occurs during descent (vertical axis).	· Gravitational torque is too large.	· Add a counterbalance to the machine to lower gravitational torque. · Reduce the descent speed. · Calculate the regenerative energy and connect an External Regeneration Resistor with the required regeneration absorption capacity.
			· The operating limit of the External Regeneration Resistor is limited to 10% duty.	· Set Pn016 to 2. For details, refer to "Parameter Details".

Alarm number	Error conditions	Status when error occurs	Cause	Measures
21	Encoder communications error	Occurs during operation.	· The encoder is disconnected. · Connector contacts are faulty.	· Fix the locations that are disconnected. · Wire correctly.
			· The encoder is wired incorrectly.	· Wire correctly.
			· The encoder is damaged.	· Replace the motor.
			· The Servo Drive is faulty.	· Replace the Servo Drive.
			· The motor is mechanically held.	· If the motor shaft is held, release it.
23	Encoder communications data error	Occurs when the power supply is turned ON. Or, occurs during operation.	· The encoder signal line is wired incorrectly.	· Wire correctly.
			· Noise on the encoder wiring causes incorrect operation.	· Take measures against noise on the encoder wiring.
			· The encoder power supply voltage has dropped (especially when the cable is long.)	· Provide the required encoder power supply voltage (5 VDC ± 5%).
24	Error counter overflow	Occurs when the motor does not rotate even when command pulses are input.	· The motor power line or the encoder wiring is incorrect.	· Wire correctly.
			· The motor is mechanically held.	· If the motor shaft is held, release it. · Release the electromagnetic brake.
			· Control PCB error	· Replace the Servo Drive.
		Occurs during high-speed rotation.	· The motor power line or the encoder wiring is incorrect.	· Wire correctly.
		Occurs when a long string of command pulses is given.	· Gain adjustment is insufficient.	· Adjust the gain.
			· The acceleration/ deceleration is too rapid.	· Extend the acceleration/ deceleration times.
			· The load is too large.	· Reduce the load. · Select a suitable motor.
		Occurs during operation.	· The set value for the Error Counter Overflow Level (Pn014) is exceeded. · The value set for the Excessive Speed Error Setting (Pn602) was exceeded.	· Increase the set value of Pn014. · Reduce the rotation speed. · Reduce the load. · Extend the acceleration/ deceleration times. · Set Pn602 to 0 (disabled) or increase the setting.
25	Excessive hybrid deviation error	Occurs for fully-closed control.	· There is deviation between the load position according to the external encoder and the motor position according to the encoder.	· Check the motor and load connection. · Check the external encoder and drive connection. · Check the external encoder load position and encoder motor position settings.

Alarm number	Error conditions	Status when error occurs	Cause	Measures
26	Overspeed	Occurs during high-speed rotation.	· The speed command input is too large.	· Set the command pulse frequency to 500 Kpps max.
			· The setting for the Electronic Gear Ratio Numerator (Pn009, Pn500 to Pn502) is not appropriate.	· Set the electronic gear ratio numerator so that the command pulse frequency is 500 Kpps or lower.
			· The speed exceeds the maximum rotation speed due to overshooting.	· Adjust the gain. · Reduce the maximum command speed.
			· The encoder is wired incorrectly.	· Wire correctly.
		Occurs when torque limit switching function is used.	· The set value for the Overspeed Detection Level Setting (Pn513) is exceeded.	· When the torque limit switching function is used, set the motor operating speed range correctly in the Error Counter Overflow Level (Pn014).
27	Command pulse error	Occurs when control signal is input or command is input.	· The command pulse input frequency exceeded the limit.	· Check the command pulse input. · Increase the set value of Pn532.
			· The setting for the Electronic Gear Ratio Numerator (Pn009, Pn500 to Pn502) is not appropriate.	· Set the electronic gear ratio numerator so that the command pulse frequency is 500 Kpps max.
28	Pulse regeneration error	Occurs during operation.	· The pulse regeneration output frequency exceeded the limit.	· Check the set value of Pn011 and Pn503. · Set Pn533 to 0 to disable the function.
29	Error counter overflow	Occurs during operation.	· The error counter value for the encoder pulse reference exceeded $\pm 2^{29}$ (536,870,912).	· Check that the motor rotates according to the position command. · Check on the torque monitor that the output torque is not saturated. · Adjust the gain. · Increase the setting for Pn013 or Pn524 to the maximum. · Wire the encoder correctly.
30	Safety input error	Occurs during operation.	· Safety input signal turned OFF.	· Check the statuses of safety inputs 1 and 2.

Alarm number	Error conditions	Status when error occurs	Cause	Measures
33	Interface I/O allocation error	Occurs when the power supply is turned ON.	· There is a duplicate setting in the I/O signal function allocation. · Specify the undefined number with the I/O signal function allocation.	· Set the function allocation correctly.
			· There is a mistake in the counter function allocation.	· Allocate to SI7.
			· There is a mistake in the command pulse prohibition input function allocation.	· Allocate to SI10.
34	Overrun limit error	Occurs during operation.	· The Overrun Limit Setting (Pn514) was exceeded during operation.	· Adjust the gain. · Increase the set value of Pn514. · Set Pn514 to 0 to disable the function.
36	Parameter error	Occurs when the power supply is turned ON.	· There are data errors in the parameters that were read.	· Reset all parameters.
			· The drive is faulty.	· Replace the Servo Drive.
37	Parameters destruction	Occurs when the power supply is turned ON.	· The parameters that were read are corrupt.	· Replace the Servo Drive.
38	Drive prohibition input error	Occurs when the servo is turned ON. Or, occurs during operation.	· The forward drive prohibition (POT) input and reverse drive prohibition (NOT) input were both OFF at the same time.	· Wire correctly. · Replace the limit sensor. · Check whether the power supply for control is input correctly. · Check whether the setting for Drive Prohibition Input Selection (Pn504) is correct.
39	Excessive analog input 1	Occurs during operation.	· The voltage input to pin 14 is too high.	· Reduce the input voltage. · Change the value for Pn424, Pn427, and Pn430.
40	Absolute encoder system down error **ABS**	Occurs when the power supply is turned ON. Occurs during operation.	· The voltage supplied to the absolute encoder is low.	· Set up the absolute encoder. · Connect the battery power supply.
41	Absolute encoder counter overflow error **ABS**	Occurs during operation.	· The multi-rotation counter of the absolute encoder exceeds the specified value.	· Properly set the Operation Switch when Using Absolute Encoder (Pn015).
42	Absolute encoder overspeed error **ABS**	Occurs when the power supply is turned ON.	· The motor rotation speed exceeds the specified value when the battery power supply is turned ON. · The wiring is incorrect.	· Reduce the motor rotation speed and supply power. · Check the wiring.
44	Absolute encoder 1-rotation counter error **ABS**	Occurs when the power supply is turned ON.	· The encoder is faulty.	· Replace the Servomotor.
45	Absolute encoder multi-rotation counter error **ABS**	Occurs when the power supply is turned ON.	· The encoder is faulty.	· Replace the Servomotor.

Alarm number	Error conditions	Status when error occurs	Cause	Measures
47	Absolute encoder status error **ABS**	Occurs when the power supply is turned ON.	· The motor was moving when the power supply was turned ON.	· Do not let the motor move when the power supply is turned ON.
48	Encoder phase-Z error	Occurs during operation.	· A phase Z pulse from the encoder was not detected regularly.	· Replace the Servomotor.
49	Encoder PS signal error	Occurs during operation.	· A logic error was detected in the PS signal from the encoder.	· Replace the Servomotor.
50	External encoder communications error	Occurs during operation.	· The disconnection detection function was activated because communications between the external encoder and drive were interrupted.	· Wire correctly. · Fix the locations that are disconnected.
			· There was a communications error in data from external encoder.	· Provide the required external encoder power supply voltage. · Wire correctly. · Connect the shield to FG.
51	External encoder status error	Occurs during operation.	· An external encoder alarm code was detected.	· Check the external encoder specifications. · From the front panel, clear the external encoder alarm, then turn the power supply OFF, then ON again.
55	Phases-A, B and Z connection error	Occurs during operation.	· A disconnection or other error was detected in external encoder phase A, phase B, or phase Z connection.	· Check the connection.
87	Forced alarm input error	Occurs during operation.	· The forced alarm input signal was input.	· Turn OFF the EMG-STOP signal.
95	Motor non-conformity	Occurs when the power supply is turned ON.	· The motor and drive combination is incorrect.	· Use a correct combination.
			· The encoder wiring is disconnected.	· Wire the encoder wiring. · Fix the locations that are disconnected.
Other numbers	Other errors		The control circuit malfunctioned due to excess noise or some other problem. The self-diagnosis function of the Servo Drive was activated, and an error occurred in the Servo Drive.	· Turn OFF the power once, and turn it ON again. · If the error is displayed even after the power is turned ON again, the system may be faulty. Stop using the system, and replace the Servomotor and/or the Servo Drive. Return the Servo Drive to the dealer that is was purchased from and ask for investigation and repair.

Troubleshooting Using the Operation Status

Symptom	Probable cause	Items to check	Measures
The PWR LED indicator does not light when the power supply is turned ON.	The power supply cable is wired incorrectly.	Check to see if the power supply input is within the allowed power supply voltage range.	Supply the correct power supply voltage.
		Check to see if the power supply input is wired correctly.	Wire correctly.
The motor does not rotate even if commands are input from the controller. (Continued on next page)	The operation command (RUN) is OFF.	In Monitor Mode, check whether the RUN signal is ON or OFF.	· Turn ON the operation command (RUN). · Wire correctly.
	The Forward or Reverse Drive Prohibition Input (POT or NOT) is OFF.	In Monitor Mode, check whether the POT signal and NOT signal are ON or OFF.	· Turn ON the POT and NOT signals. · Disable them in the settings when the POT and NOT signals are not used.
	The control mode does not conform to the command.	Check the control mode Selection (Pn001).	Set the control mode according to the command.
	The error counter reset (ECRST) is ON.	In Monitor Mode, check whether the ECRST signal is ON or OFF.	· Turn OFF the ECRST signal. · Wire correctly.
	Command Pulse Mode Selection (Pn007) is selection is incorrect.	Check the controller's command pulse type and the Servo Drive's command pulse type.	Set the Servo Drive's pulse type to match the controller's command pulse type.
	The zero speed designation (VZERO) is OFF.	In Monitor Mode, check whether the VZERO signal is ON or OFF.	· Turn ON the VZERO signal. · Wire correctly.
	The internally set speeds are not set.	Check the set value of Pn304 to Pn311.	Set the desired speeds.
	The No. 1 Torque Limit (Pn013) or No. 2 Torque Limit (Pn522) is set to 0.	Check the set value of Pn013 and Pn522.	Return the set value to the default setting.
	The Servomotor power cable is wired incorrectly.	Check the wiring.	Wire correctly.
	The encoder cable is wired incorrectly.		
	The control I/O connector (CN1) is wired incorrectly.	Check the command pulse's wiring.	Wire correctly.
		Check the command pulse type.	Set the Servo Drive's pulse type to match the controller's command pulse type.
		Check the command pulse's voltage.	Connect a resistor that matches the voltage.
	Power is not supplied.	Check whether the power supply is ON and check the PWR LED indicator.	Turn ON the power supply.
		Check the voltage across the power supply terminals.	Wire the power-ON circuit correctly.
	The speed command is disabled.	Check if the speed command method is correct.	· Set the external analog command correctly. · Set the internal speed correctly.

Symptom	Probable cause	Items to check	Measures
The motor does not rotate even if commands are input from the controller. (Continued from previous page)	The torque command is disabled.	Check if the torque command input method is correct.	Set the torque command correctly.
	The CW input and CCW input are ON at the same time.	Check the command pulse's wiring.	· Input the pulse signal either to the CW input or CCW input. · Always turn OFF the terminal that is not input to.
	The Servo Drive has broken down.	–	Replace the Servo Drive.
The Servomotor operates momentarily, but then it does not operate after that.	The Servomotor power cable is wired incorrectly.	Check the wiring of the Servomotor power cable's phases U, V, and W.	Wire correctly.
	The encoder cable is wired incorrectly.	Check the encoder cable's wiring.	Wire correctly.
The Servomotor rotates without a command.	The command pulse input is incorrect.	Check the command pulse type.	Set the correct command pulse input.
		Check the command pulse's voltage.	Connect a resistor that matches the voltage.
	The Servo Drive has broken down.	–	Replace the Servo Drive.
The Servomotor rotates in the reverse direction from the command.	The CW input and CCW input connections are reversed.	Check the controller's command pulse type and the Servo Drive's command pulse type.	Connect the CW pulse signal to the CW input and the CCW pulse signal to the CCW input.
Motor rotation is unstable.	The Servomotor power cable or encoder cable is wired incorrectly.	Check the wiring of the Servomotor power cable's phases U, V, and W and check the encoder cable's wiring.	Wire correctly.
	The coupling system between the motor shaft and the mechanical system has eccentricity or loose screws, or the load torque is fluctuating due to engagement between pulleys or gears.	Check the mechanical system's coupling section.	Review and adjust the machine.
		Try rotating the motor without a load. (Disconnect it from the mechanical system.)	
	The load's moment of inertia exceeds the Servo Drive's allowable value.	Try rotating the motor without a load. (Disconnect it from the mechanical system.)	· Reduce the load. · Replace the Servomotor and Servo Drive with higher capacity models.
	The pulse signal line's connections are loose.	Check the pulse signal line's wiring at the controller and Servo Drive.	Wire correctly.
		Check the controller's command pulse type and the Servo Drive's command pulse type.	Set the Servo Drive's pulse type to match the controller's command pulse type.
	The gain is wrong.	–	Perform manual tuning.
	The CN1 input signal is chattering.	Check the operation command (RUN), error counter reset (ECRST), zero speed designation (VZERO), internally set speed selection 1 (VSEL1) and internally set speed selection 2 (VSEL2).	Wire correctly so that there is no chattering.
The Servomotor is overheating.	The ambient temperature is too high.	Check that the ambient temperature around the motor is 40°C or less.	Lower the ambient temperature around the Servomotor to 40°C or less. (Use a fan or air conditioner.)
	Ventilation is obstructed.	Check to see whether anything is blocking ventilation.	Improve ventilation.
	The Servomotor is overloaded.	Try rotating the motor without a load. (Disconnect it from the mechanical system.)	· Reduce the load. · Replace the Servomotor and Servo Drive with higher capacity models.
	The Servomotor vibrates during rotation.		

Symptom	Probable cause	Items to check	Measures
The Servomotor holding brake is ineffective.	Power is supplied to the holding brake.	Check whether power is supplied to the holding brake.	Configure a circuit that cuts power supply to the holding brake when the motor stops and the load is held by the holding brake.
The motor does not stop or is hard to stop even if the operation command (RUN) is turned OFF while the motor is rotating.	The load inertia is too large.	Check the following: ·Is the load too large? ·Is the motor rotation speed too high?	Review the load conditions, and replace the Servomotor and Servo Drive with appropriate models.
	The stop circuit failed.	–	Replace the Servo Drive.
The motor is producing unusual noises or the machine is vibrating. (Continued on next page)	There are problems with the machine's installation.	Check to see if the Servomotor's mounting screws are loose.	Retighten the mounting screws.
		Check whether the axes are misaligned in the coupling.	Align the coupling.
		Check whether the coupling is unbalanced.	Adjust the coupling's balance.
	There is a problem with the bearings.	Check for noise or vibration around the bearings.	Contact your OMRON dealer or sales office.
	The gain is wrong.	–	Perform manual tuning.
	The Speed Feedback Filter Time Constant (Pn103) is wrong.	Check the value set in Pn103.	Return the set to 0 (default set) or increase the set value.
	Noise is entering into the control I/O signal cable because the cable does not meet specifications.	Check to see if the cable is a twisted-pair cable or shielded twisted-pair cable with core wires that are at least 0.08 mm dia.	Use a control I/O signal cable that meets specifications.
	Noise is entering into the control I/O signal cable because the cable is longer than the specified length.	Check the length of the control I/O signal cable.	Shorten the control I/O signal cable to 3 m or less.
	Noise is entering into the cable because the encoder cable does not meet specifications.	Check to see if it is a shielded twisted-pair cable with core wires that are at least 0.12 mm dia.	Use an encoder cable that meets specifications.
	Noise is entering into the encoder cable because the cable is longer than the specified length.	Check the length of the encoder cable.	Shorten the encoder cable to less than 50 m.
	Noise is entering into the signal lines because the encoder cable is stuck or the sheath is damaged.	Check the encoder cable for damage.	Correct the encoder cable's pathway.
	Excessive noise on encoder cable.	Check to see if the encoder cable is bound together with or too close to high-current lines.	Install the encoder cable where it won't be subjected to surges.
	The FG's potential is fluctuating due to devices near the Servomotor, such as welding machines.	Check for ground problems (loss of ground or incomplete ground) at equipment such as welding machines near the Servomotor.	Ground the equipment properly and prevent current from flowing to the encoder FG.
	Errors are being caused by excessive vibration or shock on the encoder.	There are problems with mechanical vibration or Servomotor installation (such as the precision of the mounting surface, attachment, or axial offset).	Reduce the mechanical vibration or correct the Servomotor's installation.
The motor is producing unusual noises or the machine is vibrating. (Continued from previous page)	The machine and the motor are resonating.	Check to see if the machine is resonating.	· Readjust the torque command filter time constant. · If there is resonance, set the Notch Filter 1 Frequency (Pn201), Notch Filter 1 Width (Pn202), and Notch Filter 1 Depth (Pn203).

Symptom	Probable cause	Items to check	Measures
Vibration is occurring at the same frequency as the power supply.	Inductive noise is occurring.	Check to see if the drive control signal lines are too long.	Shorten the control signal lines.
		Check to see if the control signal lines and power supply lines are not bound together.	· Separate control signal lines from power supply lines. · Use a low-impedance power supply for control signals.
The position is misaligned. (Position misalignment occurs without an alarm being output.)	There is an error in the coupling of the mechanical system and the Servomotor.	Check to see if the coupling of the mechanical system and the Servomotor is misaligned.	Correct the coupling between the mechanical system and the Servomotor.
	Noise is entering into the error counter reset (ECRST).	Check to see if the control signal lines and power supply lines are not bound together.	Separate the control signal lines from the power lines or take other measures against noise.
	The gain is wrong.	–	Perform manual tuning.
	The load inertia is large.	Inspect the following. · Is the load too large? · Is the motor rotation speed too high?	· Adjust the gain. · Review the load conditions, and replace the Servomotor and Servo Drive with appropriate models.

11-5 Periodic Maintenance

⚠ Caution

After replacing the Servo Drive, transfer to the new Servo Drive all data needed to resume operation, before restarting the operation. Equipment damage may result.

Never repair the Servo Drive by disassembling it.
Electric shock or injury may result.

Servomotors and Servo Drives contain many components and will operate properly only when each of the individual components is operating properly.
Some of the electrical and mechanical components require maintenance depending on application conditions. Periodic inspection and replacement are necessary to ensure proper long-term operation of Servomotors and Servo Drives. (Quoted from *The Recommendation for Periodic Maintenance of a General-purpose Inverter* published by JEMA.)

The periodic maintenance cycle depends on the installation environment and application conditions of the Servomotors and Servo Drives.
Recommended maintenance times are listed below for Servomotors and Servo Drives. Use these for reference in periodic maintenance.

Servomotor Life Expectancy

- The lifetimes for the different motor parts are listed below.
  Bearings: 20,000 hours
  Oil seal: 5,000 hours
  Encoder: 30,000 hours
  These values presume an ambient motor operating temperature of 40°C, within the allowable axial load, rated operation (rated torque and rated rotation speed), and proper installation as described in this manual.
  The oil seal can be replaced.
- The radial load during Servomotor operation on timing pulleys and other components contacting belts is two or more times the static load or more. Consult with the belt and pulley manufacturers and adjust designs and system settings so that the motor allowable axial load is not exceeded even during operation. If a motor is used under a shaft load exceeding the allowable limit, the motor shaft can break and the bearings can be damaged.

Servo Drive Life Expectancy

- The lifetimes for the different drive parts are listed below.
  Aluminum electrolytic capacitors: 28,000 hours
  (at an ambient drive operating temperature of 55°C, constant output of rated torque, constant output of rated rotation speed, and installation as described in this manual)
  Axial-flow fan: 10,000 to 30,000 hours (The limit depends on the operating conditions.)
  Inrush current prevention relay: Approx. 20,000 operations (The limit depends on the operation conditions.)
- When using the Servo Drive in continuous operation, use fans or air conditioners to maintain the ambient temperature below 40°C.
- We recommend that ambient temperature and the power supply ON time be reduced as much the possible to lengthen the service life of the Servo Drive.
- The limit of aluminum electrolytic capacitors is greatly affected by the ambient operating temperature. Generally, an increase of 10°C in the operating ambient temperature will reduce capacitor service life by 50%. Following equation shows an example for 25°C: .

$$\text{Lifetime } 25°C = \text{Lifetime } 55°C \times 2^{\frac{55-25}{10}} = 224000 \text{ hour}$$

- The aluminum electrolytic capacitors deteriorate even when the Servo Drive is stored with no power supplied. If the Servo Drive is not used for a long time, we recommend periodic inspection and a part replacement period of 5 years.
- If the Servomotor or Servo Drive is not to be used for a long time, or if they are to be used under conditions worse than those described above, a periodic inspection period of 5 years is recommended.
- Upon request, OMRON will examine the Servo Drive and Servomotor and determine if part replacement is required.

Replacing the Absolute Encoder Battery ABS

Replace the absolute encoder backup battery if it has been used for more than 3 years or if an absolute encoder system down error (Alarm No. 40) has occurred.

Replacement Battery Model and Specifications

Item	Specifications
Name	Absolute Encoder Backup Battery Unit
Model	R88A-BAT01G
Battery model	ER6V (Toshiba)
Battery voltage	3.6 V
Current capacity	2,000 mA·h

Mounting the Backup Battery Unit

Mounting the Battery Unit for the First Time

Connect the Absolute Encoder Battery Unit to the motor, then set up the absolute encoder. Refer to "Absolute Encoder Setup"(P.9-4).
After the Absolute Encoder Battery Unit is attached, it is recommended that the control power supply be turned ON and OFF once a day to refresh the battery.
If you neglect to refresh the battery, battery alarms will occur due to voltage delays in the battery.

Replacing the Battery Unit

If a battery warning occurs, the absolute encoder power supply must be replaced.
Replace the Battery Unit with the control power supply of the Servo Drive turned ON. If the Battery Unit is replaced with the control power supply of the Servo Drive turned OFF, data held in the encoder will be lost.
Once the absolute encoder battery has been replaced, clear the battery warning by alarm clear from the front panel. Refer to "Alarm Clear"(P.9-25) for information on clearing alarms.

Note. If the absolute encoder is cleared using the front panel or the absolute values are cleared using communications, all alarm and multi-rotation data will be lost and the absolute encoder must be set up. Refer to "Absolute Encoder Setup"(P.9-4).

Battery Unit Mounting Method

1. Prepare the replacement Battery Unit (R88A-BAT01G).

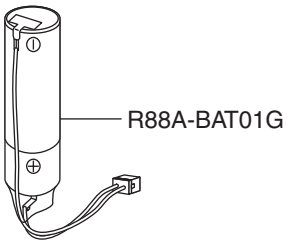

2. Remove the Battery Unit box cover.

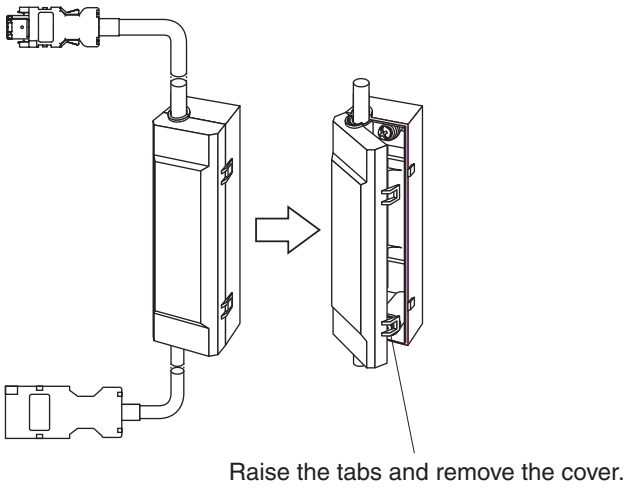

3. Put the Battery Unit into the battery box.

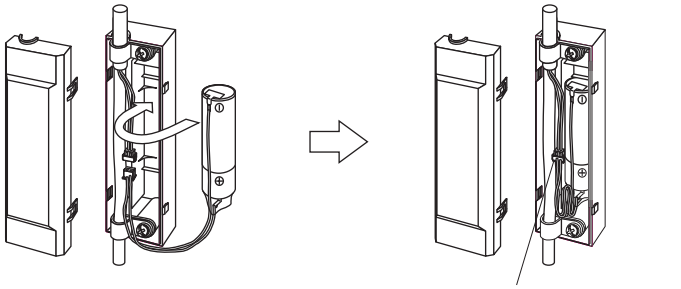

4. Close the cover to the battery box.

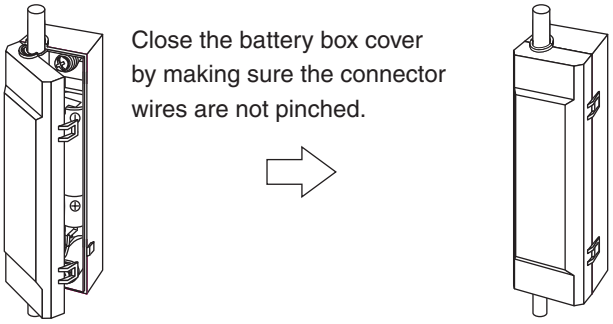

12

Appendix

This chapter provides connection examples using OMRON's PLC and Position Controller, as well as a list of parameters.

12-1 Connection Examples 12-1
12-2 Parameter List.....12-11

12-1 Connection Examples

Connection Example 1: Connecting to SYSMAC CJ1W-NC133/233/433

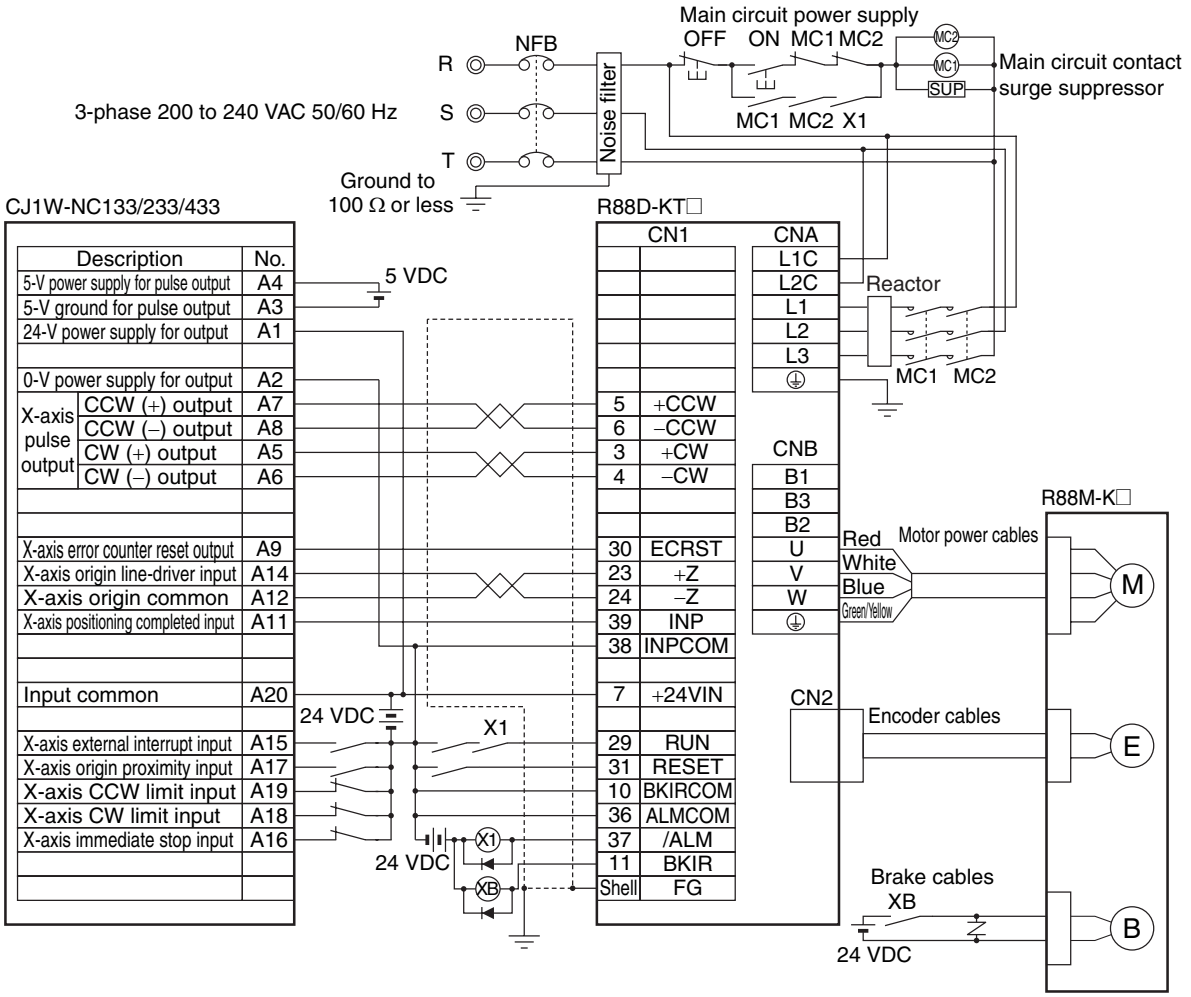

Precautions for Correct Use

- The example shows a 3-phase, 200-VAC input to the drive for the main circuit power supply. Be sure to provide a power supply and wiring conforming to the power supply specifications for the drive in use.
- Incorrect signal wiring can cause damage to units and the drive.
- Leave unused signal lines open and do not wire them.
- Use mode 2 for origin search.
- The diode recommended for surge absorption is the RU 2 (Sanken Electric Co., Ltd.) or the equivalent.
- Make the setting so that the servo can be turned ON/OFF with the RUN signal.

Connection Example 2: Connecting to SYSMAC CJ1W-NC113/213/413

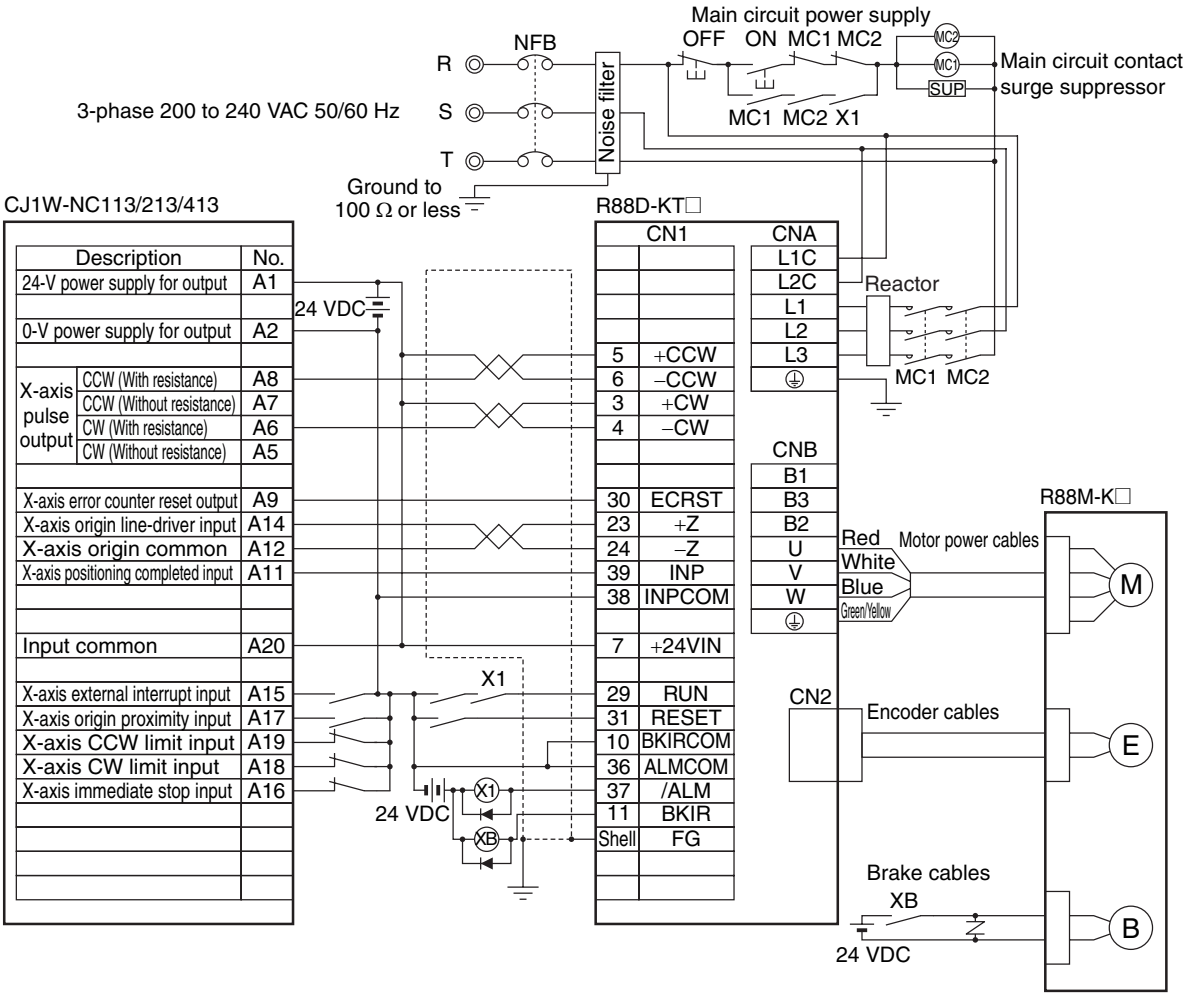

Precautions for Correct Use

- The example shows a 3-phase, 200-VAC input to the drive for the main circuit power supply. Be sure to provide a power supply and wiring conforming to the power supply specifications for the drive in use.
- Incorrect signal wiring can cause damage to units and the drive.
- Leave unused signal lines open and do not wire them.
- Use mode 2 for origin search.
- The diode recommended for surge absorption is the RU 2 (Sanken Electric Co., Ltd.) or the equivalent.
- Make the setting so that the servo can be turned ON/OFF with the RUN signal.

Connection Example 3: Connecting to SYSMAC CS1W-NC133/233/433

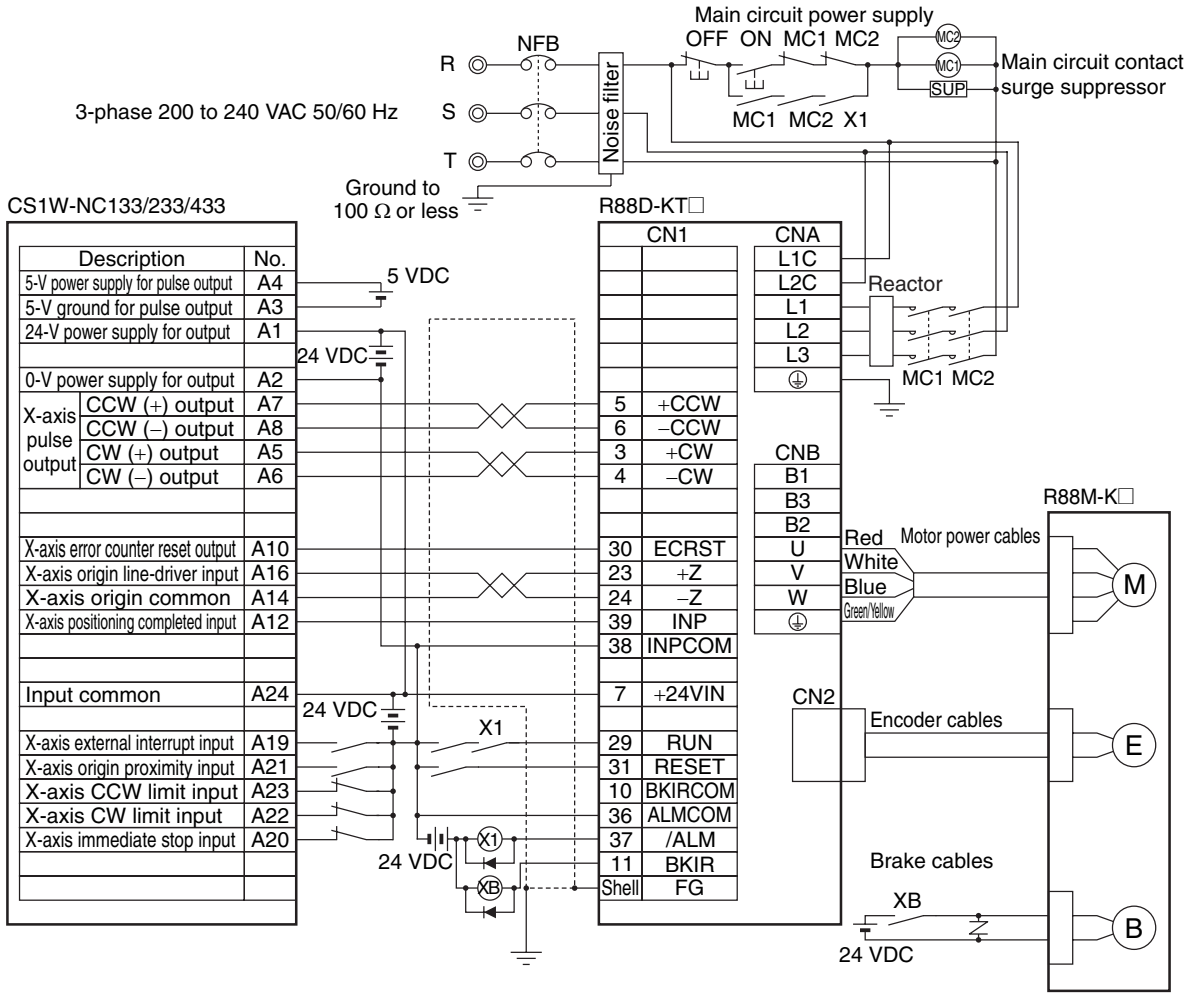

Precautions for Correct Use

- The example shows a 3-phase, 200-VAC input to the drive for the main circuit power supply. Be sure to provide a power supply and wiring conforming to the power supply specifications for the drive in use.
- Incorrect signal wiring can cause damage to units and the drive.
- Leave unused signal lines open and do not wire them.
- Use mode 2 for origin search.
- The diode recommended for surge absorption is the RU 2 (Sanken Electric Co., Ltd.) or the equivalent.
- Make the setting so that the servo can be turned ON/OFF with the RUN signal.

Connection Example 4: Connecting to SYSMAC CS1W-NC113/213/413 or C200HW-NC113/213/413

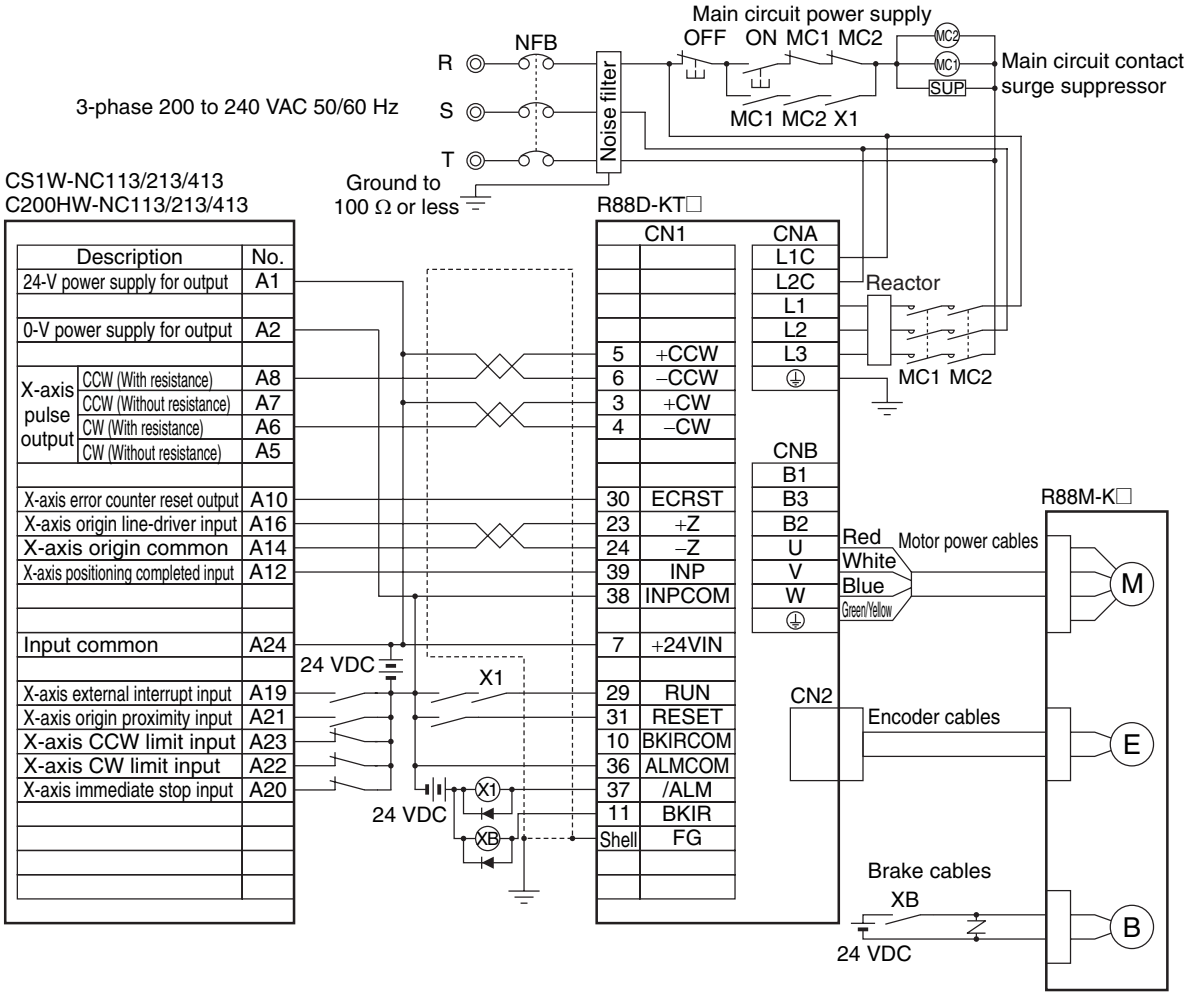

Precautions for Correct Use

- The example shows a 3-phase, 200-VAC input to the drive for the main circuit power supply. Be sure to provide a power supply and wiring conforming to the power supply specifications for the drive in use.
- Incorrect signal wiring can cause damage to units and the drive.
- Leave unused signal lines open and do not wire them.
- Use mode 2 for origin search.
- The diode recommended for surge absorption is the RU 2 (Sanken Electric Co., Ltd.) or the equivalent.
- Make the setting so that the servo can be turned ON/OFF with the RUN signal.

Connection Example 5: Connecting to a SYSMAC Motion Control Unit

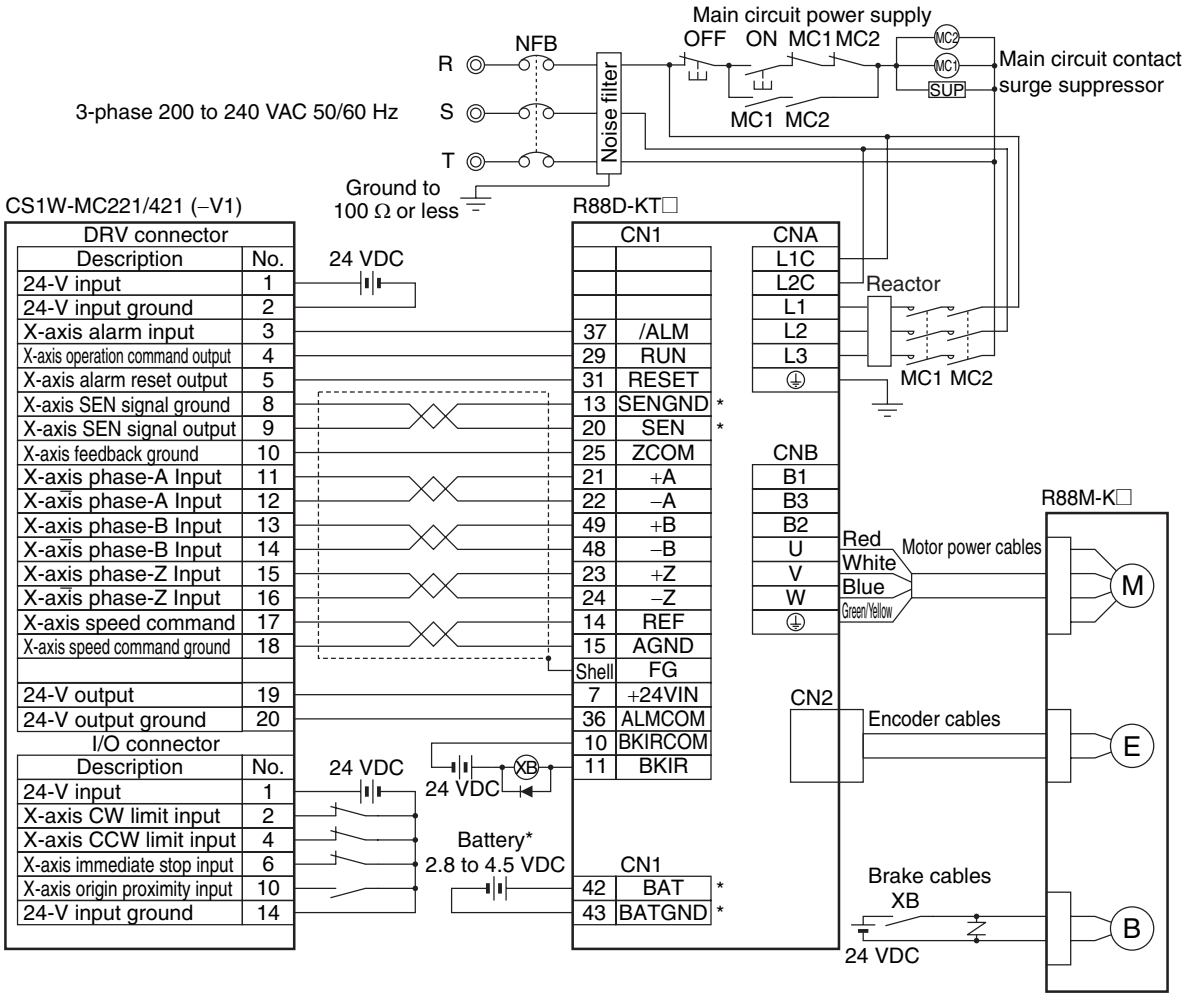

Precautions for Correct Use

- The example shows a 3-phase, 200-VAC input to the drive for the main circuit power supply. Be sure to provide a power supply and wiring conforming to the power supply specifications for the drive in use.
- Incorrect signal wiring can cause damage to units and the drive.
- Leave unused signal lines open and do not wire them.
- Connect terminals and wiring marked with an asterisk (*) when using an absolute encoder.
- This wiring diagram is an example of X-axis wiring only. For other axes, connections must be made in the same way with the drive.
- Always short unused NC input terminals at the Motion Control Unit I/O connectors.
- Make the setting so that the servo can be turned ON/OFF with the RUN signal.

Connection Example 6: Connecting to SYSMAC CP1H-Y□□DT-D

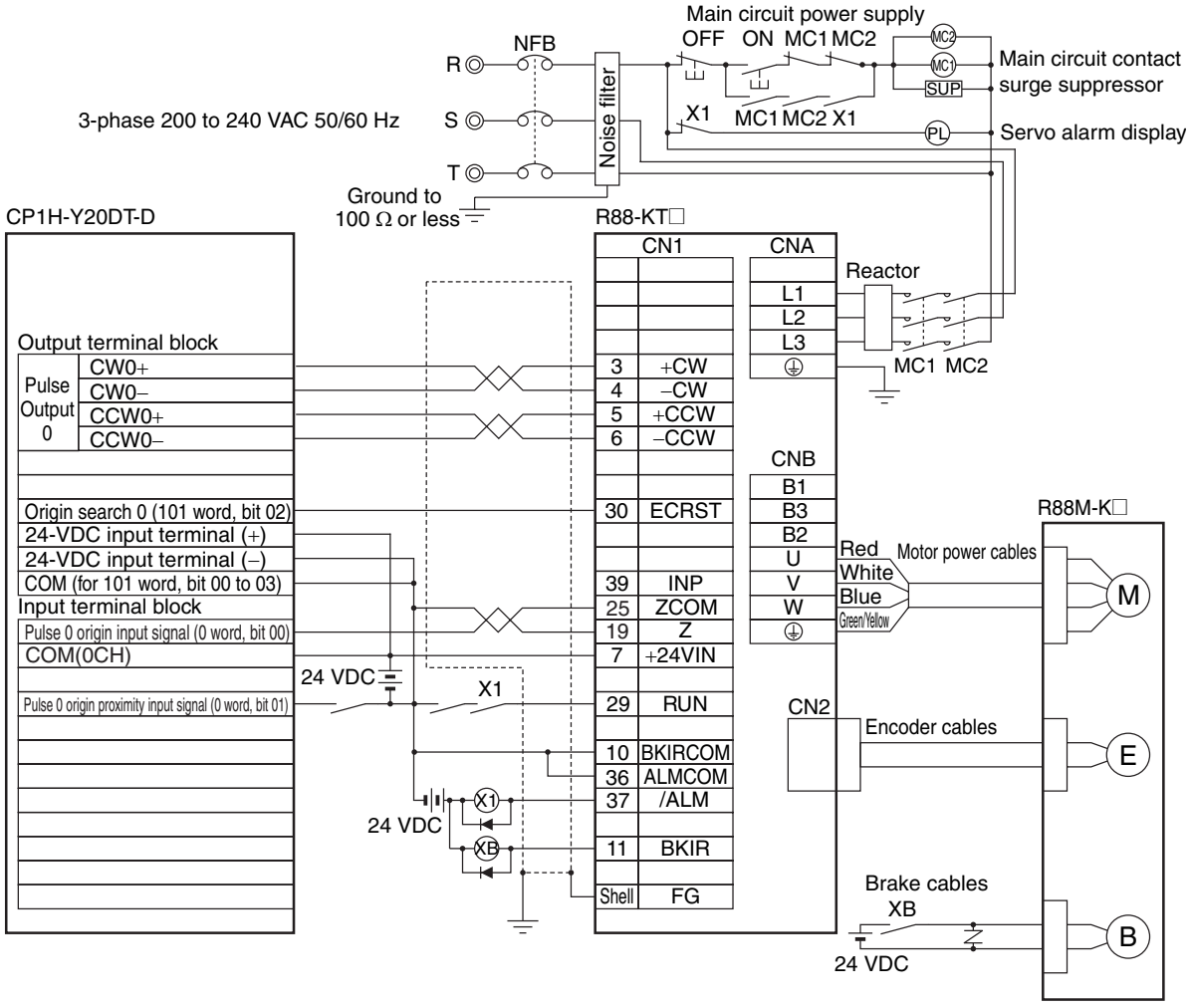

Precautions for Correct Use

- Incorrect signal wiring can cause damage to units and the drive.
- Leave unused signal lines open and do not wire them.
- Do not share the power supply for brakes (24 VDC) with the 24-VDC power supply for controls.
- The diode recommended for surge absorption is the RU 2 (Sanken Electric Co., Ltd.) or the equivalent.

Connection Example 7: Connecting to SYSMAC CP1H-X□□DT-D/CP1L-□□□DT-D

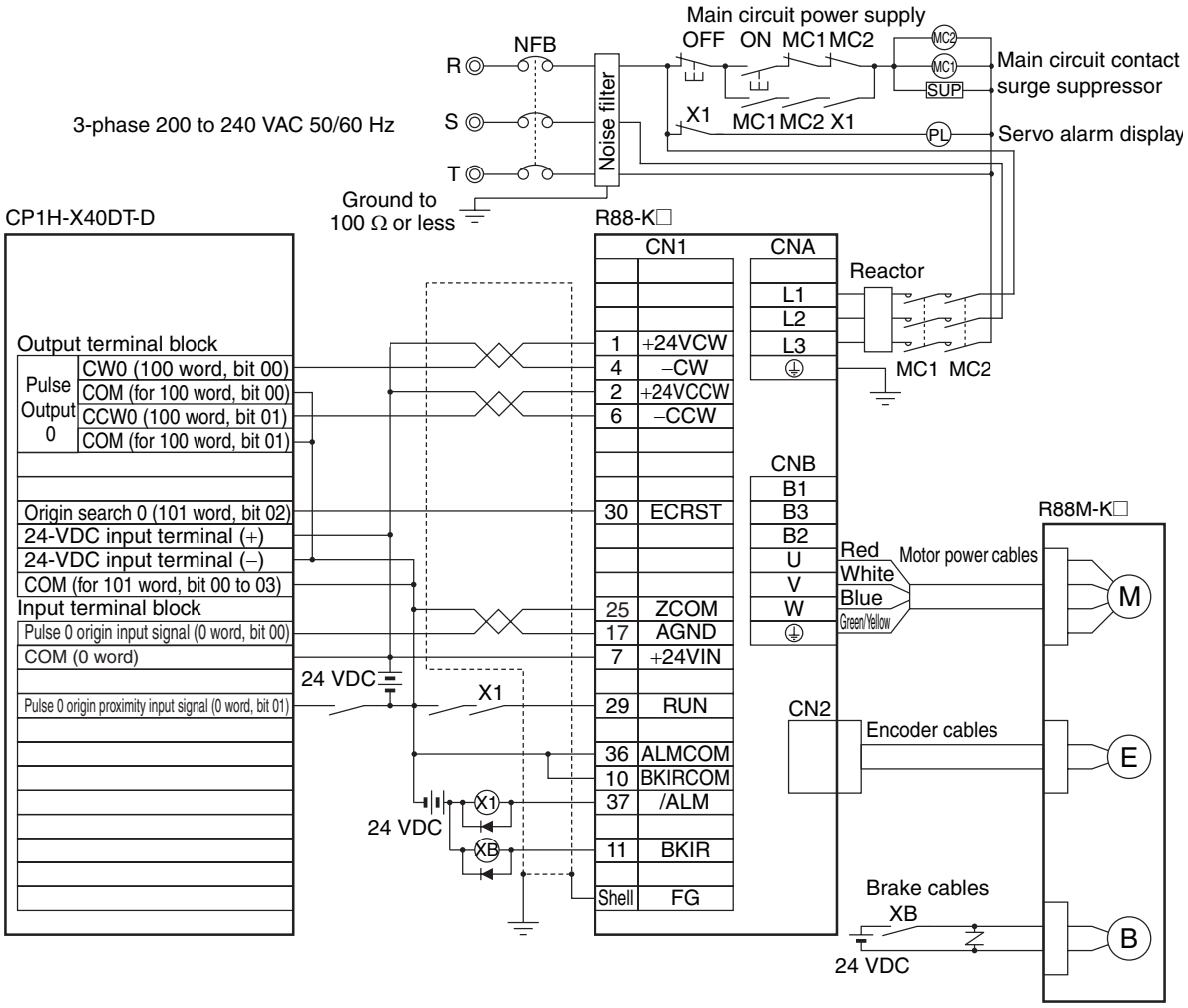

Precautions for Correct Use

- Incorrect signal wiring can cause damage to units and the drive.
- Leave unused signal lines open and do not wire them.
- Do not share the power supply for brakes (24 VDC) with the 24-VDC power supply for controls.
- The diode recommended for surge absorption is the RU 2 (Sanken Electric Co., Ltd.) or the equivalent.

Connection Example 8: Connecting to SYSMAC CJ1M

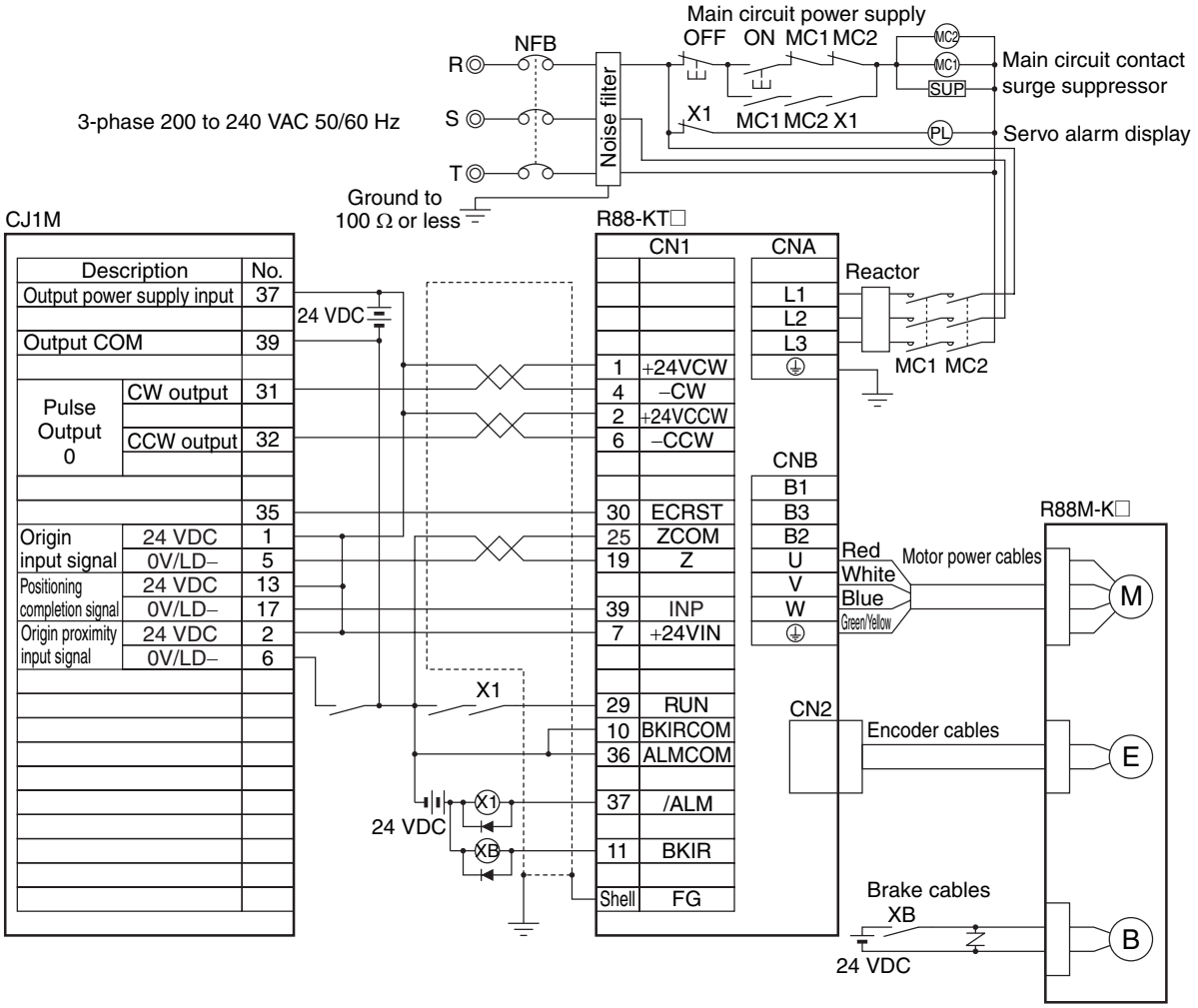

Precautions for Correct Use

- Incorrect signal wiring can cause damage to units and the drive.
- Leave unused signal lines open and do not wire them.
- Use mode 2 for origin search.
- Use the power supply for command pulse (24 VDC) as a dedicated power supply.
- Do not share the power supply for brakes (24 VDC) with the 24-VDC power supply for controls.
- The diode recommended for surge absorption is the RU 2 (Sanken Electric Co., Ltd.) or the equivalent.

Connection Example 9: Connecting to a SYSMAC CS1W-HCP22-V1 Customizable Counter Unit

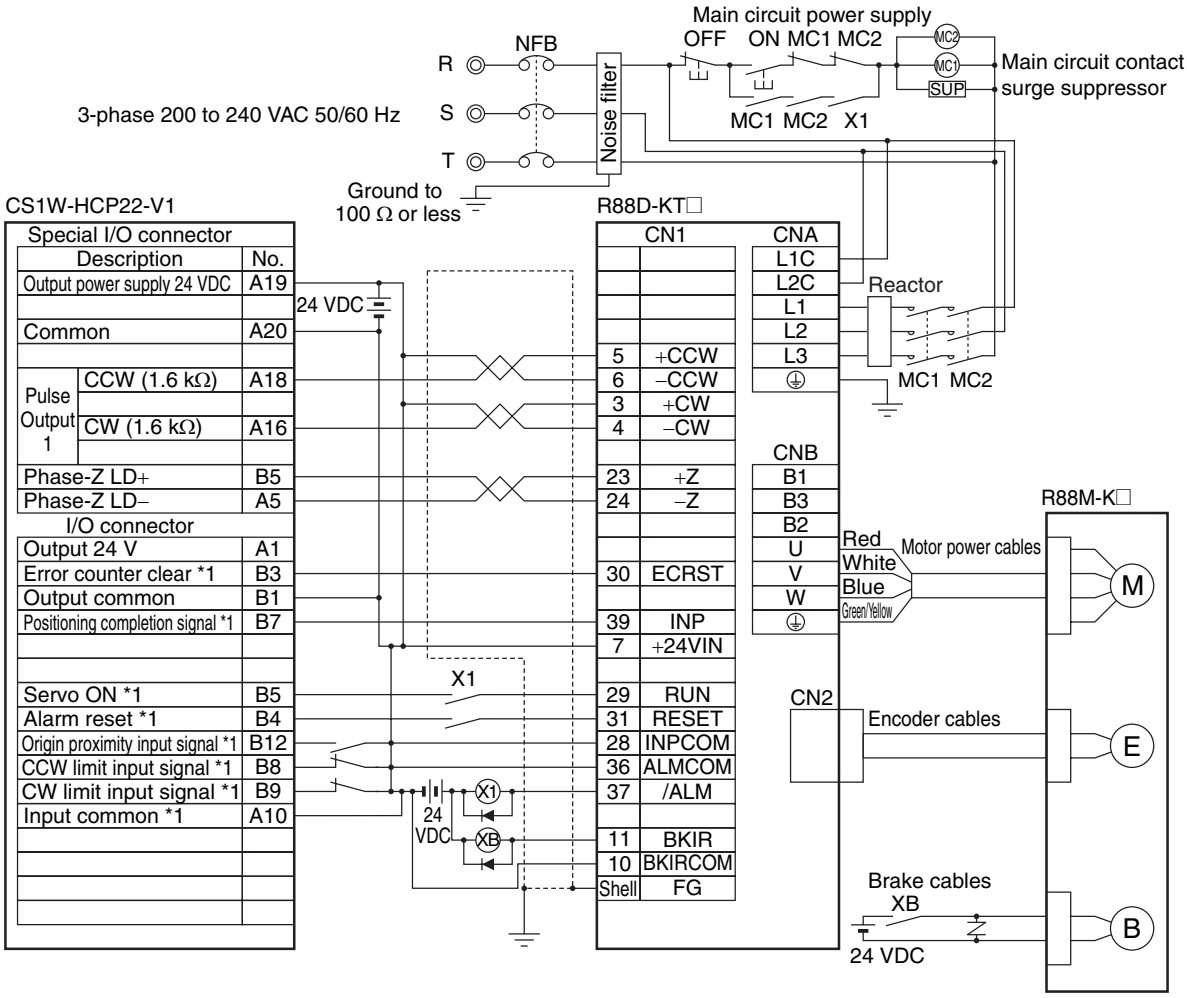

*1. The I/O signals for the HCP22 depend on the memory allocations in the Internal Memory area. Change the wiring according to the allocations.

Precautions for Correct Use

- Incorrect signal wiring can cause damage to units and the drive.
- Leave unused signal lines open and do not wire them.
- Use the power supply for command pulse (24 VDC) as a dedicated power supply.
- The diode recommended for surge absorption is the RU 2 (Sanken Electric Co., Ltd.) or the equivalent.
- Do not share the power supply for brakes (24 VDC) with the 24-VDC power supply for controls.

Connection Example 10: Connecting to a SYSMAC CS1W-HCA12/22-V1 Customizable Counter Unit

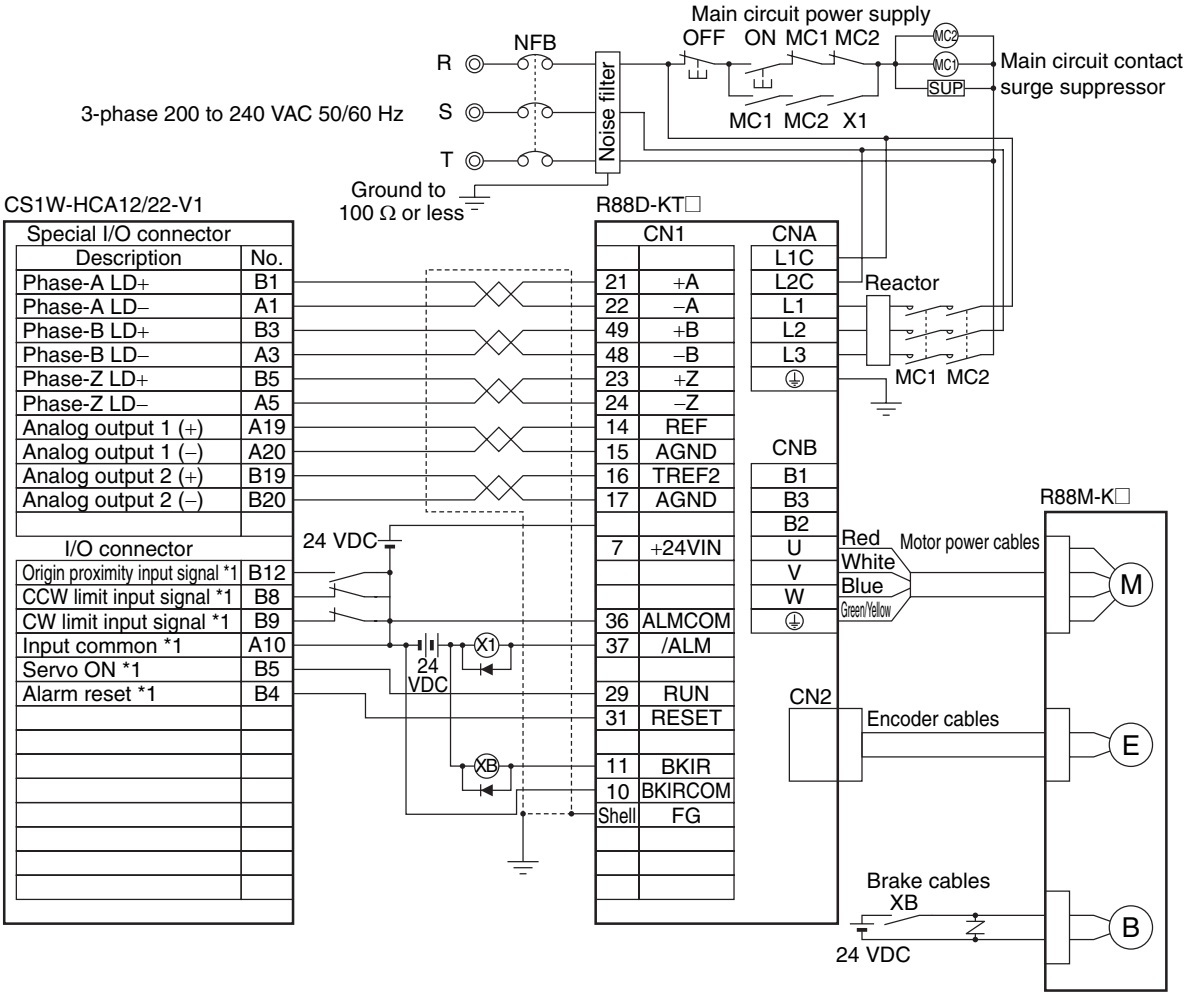

*1. The I/O signals for the HCA12/22 depend on the allocations in the Internal Memory area. Change the wiring according to the allocations.

Precautions for Correct Use

- Incorrect signal wiring can cause damage to units and the drive.
- Leave unused signal lines open and do not wire them.
- Use the power supply for command pulse (24 VDC) as a dedicated power supply.
- The diode recommended for surge absorption is the RU 2 (Sanken Electric Co., Ltd.) or the equivalent.
- Do not share the power supply for brakes (24 VDC) with the 24-VDC power supply for controls.

12-2 Parameter List

- Some parameters are enabled by turning the power supply OFF and then ON again. (Those parameters are indicated in the table.) After changing these parameters, turn OFF the power supply, confirm that the power supply indicator has gone OFF, and then turn ON the power supply again.
- Do not change the parameters marked "Reserved". Do not change the settings marked "Reserved".

Basic Setting Parameters

Pn number	Parameter name	Setting	Description	Default setting	Unit	Setting range	Power supply OFF to ON
000	Rotation Direction Switching	Set the relation between the command direction and the motor rotation direction.		1	–	0 or 1	Yes
		0	The +command indicates the forward direction as viewed from the shaft end (CW).				
		1	The +command indicates the reverse direction as viewed from the shaft end (CCW).				
001	Control Mode Selection	Select the Servo Drive control mode.		0	–	0 to 6	Yes
		0	Position control (pulse train command)				
		1	Speed control (analog command)				
		2	Torque control (analog command)				
		3	No. 1: Position control No. 2: Speed control				
		4	No. 1: Position control No. 2: Torque control				
		5	No. 1: Speed control No. 2: Torque control				
		6	Fully-closed control				
002	Realtime Autotuning Mode Selection	Set the operation mode for realtime autotuning.		1	–	0 to 6	–
		0	Disabled				
		1	Emphasizes stability				
		2	Emphasizes positioning				
		3	If there is an unbalanced load like in a vertical axis.				
		4	Used when friction is large.				
		5	Used when there is an unbalanced load, such as a vertical axis, and friction is large.				
		6	Used to customize the Realtime Autotuning Mode.				
003	Realtime Autotuning Machine Rigidity Setting	Set the machine rigidity for executing realtime autotuning.		See Note 1	–	0 to 31	–
004	Inertia Ratio	Set the load inertia as a percentage of the motor rotor inertia.		250	%	0 to 10,000	–

Pn number	Parameter name	Setting	Description	Default setting	Unit	Setting range	Power supply OFF to ON
005	Command Pulse Input Selection	Select the command pulse input.		0	–	0 or 1	Yes
		0	Photocoupler input				
		1	Input for line driver only				
006	Command Pulse Rotation Direction Switching Selection	Set the command pulse count direction.		0	–	0 or 1	Yes
		0	Forward direction				
		1	Reverse direction				
007	Command Pulse Mode Selection	Set the command pulse mode.		1	–	0 to 3	Yes
		0	90° differential-phase (A/B) inputs				
		1	Forward pulse/reverse pulse				
		2	90° differential-phase (A/B) inputs				
		3	Feed pulse and direction signal				
008	Electronic Gear Integer Setting	Set the number of command pulses per motor rotation.		10000	Pulses	0 to 2^{20}	Yes
009	Electronic Gear Ratio Numerator 1	Set the electronic gear ratio. If Pn009 = 0, the encoder resolution is set as the numerator. $\frac{\text{Electronic gear ratio numerator 1 (Pn009)}}{\text{Electronic gear ratio denominator (Pn010)}}$		0	–	0 to 2^{30}	–
010	Electronic Gear Ratio Denominator			10000	–	1 to 2^{30}	–
011	Encoder Dividing Numerator	Set the number of phase A and phase B output pulses, respectively per motor rotation.		2500	P/r	1 to 262,144	Yes
012	Encoder Output Direction Switching Selection	Select the phase B logic for pulse regeneration output and the output source.		0	–	0 to 3	Yes
		0	Phase B logic: Not reversed Output source: Encoder				
		1	Phase B logic: Reversed Output source: Encoder				
		2	Phase B logic: Not reversed Output source: External encoder				
		3	Phase B logic: Reversed Output source: External encoder				
013	No. 1 Torque Limit	Set the No. 1 limit value for the output torque of the motor.		500	%	0 to 500	–
014	Error Counter Overflow Level	Set the range of the error counter overflow level. Detection of error counter overflow level error is disabled if the set value is 0.		100000	Command units	0 to 2^{27}	–
015	Operation Switch when Using Absolute Encoder	Select the absolute encoder usage method.		1	–	0 to 2	Yes
		0	Used as an absolute encoder.				
		1	Used as an incremental encoder.				
		2	Used as an absolute encoder. (Multi-rotation counter overflows are ignored.)				

Pn number	Parameter name	Setting	Description	Default setting	Unit	Setting range	Power supply OFF to ON
016	Regeneration Resistor Selection	Select the Regeneration Resistor used.		See Note 2	–	0 to 3	Yes
		0	Use the Built-in Resistor. Triggering of regeneration overload protection (Alarm No. 18) depends on the Built-in Resistor (with approx. 1% duty).				
		1	Use an External Resistor. The regeneration processing circuit operates and regeneration overload protection (Alarm No. 18) is triggered when the operating rate of the Regeneration Resistor exceeds 10%.				
		2	Use an External Resistor. Regeneration overload protection (Alarm No. 18) does not operate.				
		3	No Regeneration Resistor All regeneration power is processed with built-in capacitors.				
017	External Regeneration Resistor Setting	Select the type of load ratio calculation for the External Regeneration Resistor.		0	–	0 to 4	Yes
		0	Regeneration load ratio is 100% when operating rate of the External Regeneration Resistor is 10%.				
		1	Reserved				
		2	Reserved				
		3	Reserved				
		4	Reserved				

♦Note 1: The default setting is 11 for 200-V Servo Drives of 1 kW or higher and 400-V Servo Drives.

♦Note 2: The default setting is 0 for 100-V Servo Drives of 400 W, 200-V Servo Drives of 750 W or higher, and 400-V Servo Drives.

Gain Parameters

Pn number	Parameter name	Setting	Description	Default setting	Unit	Setting range	Power supply OFF to ON
100	Position Loop Gain	Set the position loop gain 1.		See Note 1	0.1/s	0 to 30,000	–
101	Speed Loop Gain	Set the speed loop gain 1.		See Note 2	0.1 Hz	1 to 32,767	–
102	Speed Loop Integral Time Constant	Set the speed loop integral time constant 1.		See Note 3	0.1 ms	1 to 10,000	–
103	Speed Feedback Filter Time Constant	The speed feedback filter 1 can be set to one of 6 values.		0	–	0 to 5	–
104	Torque Command Filter Time Constant	Set the time constant for the torque filter 1.		See Note 4	0.01 ms	0 to 2,500	–
105	Position Loop Gain 2	Set the position loop gain 2.		See Note 5	0.1/s	0 to 30,000	–
106	Speed Loop Gain 2	Set the speed loop gain 2.		See Note 6	0.1 Hz	1 to 32,767	–
107	Speed Loop Integral Time Constant 2	Set the speed loop integral time constant 2.		10000	0.1 ms	1 to 10,000	–
108	Speed Feedback Filter Time Constant 2	The speed feedback filter 2 can be set to one of 6 values.		0	–	0 to 5	–
109	Torque Command Filter Time Constant 2	Set the time constant for the torque filter 2.		See Note 7	0.01 ms	0 to 2,500	–
110	Speed Feed-forward Amount	Set the speed feed-forward amount.		300	0.1%	0 to 1,000	–
111	Speed Feed-forward Command Filter	Set the speed feed-forward filter time constant.		50	0.01 ms	0 to 6,400	–
112	Torque Feed-forward Amount	Set the torque feed-forward amount.		0	0.1%	0 to 1,000	–
113	Torque Feed-forward Command Filter	Set the torque feed-forward filter.		0	0.01 ms	0 to 6,400	–
114	Gain Switching Input Operating Mode Selection	Execute optimum tuning using the gain switching function.		1	–	0 or 1	–
		0	Gain 1 (PI/P switching enabled)				
		1	Gain 1 and gain 2 switching available				

Pn number	Parameter name	Setting	Description	Default setting	Unit	Setting range	Power supply OFF to ON
115	Switching Mode in Position Control	Select the gain switching condition for position control. It is necessary that Pn114 be set to 1.		0	–	0 to 10	–
		0	Always gain 1				
		1	Always gain 2				
		2	Switching using gain switching input (GSEL)				
		3	Torque command change amount				
		4	Always gain 1				
		5	Command speed				
		6	Amount of position error				
		7	Command pulses received				
		8	Positioning completion signal (INP) OFF				
		9	Actual motor speed				
		10	Combination of command pulse input and speed				
116	Gain Switching Delay Time in Position Control	Set the delay time for switching from gain 2 to gain 1.		50	0.1 ms	0 to 10,000	–
117	Gain Switching Level in Position Control	Set the gain switching level.		50	–	0 to 20,000	–
118	Gain Switching Hysteresis in Position Control	Set the hysteresis for gain switching.		33	–	0 to 20,000	–
119	Position Gain Switching Time	Set the position gain switching time for gain switching.		33	0.1 ms	0 to 10,000	–
120	Switching Mode in Speed Control	Select the gain switching condition for speed control. It is necessary that Pn114 be set to 1.		0	–	0 to 5	–
		0	Always gain 1				
		1	Always gain 2				
		2	Switching using gain switching input (GSEL)				
		3	Torque command change amount				
		4	Speed command change amount				
		5	Command speed				
121	Gain Switching Delay Time in Speed Control	Set the delay time for switching from gain 2 to gain 1.		0	0.1 ms	0 to 10,000	–
122	Gain Switching Level in Speed Control	Set the gain switching level.		0	–	0 to 20,000	–
123	Gain Switching Hysteresis in Speed Control	Set the hysteresis for gain switching.		0	–	0 to 20,000	–

Pn number	Parameter name	Setting	Description	Default setting	Unit	Setting range	Power supply OFF to ON
124	Switching Mode in Torque Control	Select the gain switching condition for torque control. It is necessary that Pn114 be set to 1.		0	–	0 to 3	–
		0	Always gain 1				
		1	Always gain 2				
		2	Switching using gain switching input (GSEL)				
		3	Torque command change amount				
125	Gain Switching Delay Time in Torque Control	Set the delay time for switching from gain 2 to gain 1.		0	0.1 ms	0 to 10,000	–
126	Gain Switching Level in Torque Control	Set the gain switching level.		0	–	0 to 20,000	–
127	Gain Switching Hysteresis in Torque Control	Set the hysteresis for gain switching.		0	–	0 to 20,000	–

- Note 1: The default setting is 320 for 200-V Servo Drives of 1 kW or higher, and 400-V Servo Drives.
- Note 2: The default setting is 180 for 200-V Servo Drives of 1 kW or higher, and 400-V Servo Drives.
- Note 3: The default setting is 310 for 200-V Servo Drives of 1 kW or higher, and 400-V Servo Drives.
- Note 4: The default setting is 126 for 200-V Servo Drives of 1 kW or higher, and 400-V Servo Drives.
- Note 5: The default setting is 380 for 200-V Servo Drives of 1 kW or higher, and 400-V Servo Drives.
- Note 6: The default setting is 180 for 200-V Servo Drives of 1 kW or higher, and 400-V Servo Drives.
- Note 7: The default setting is 126 for 200-V Servo Drives of 1 kW or higher, and 400-V Servo Drives.

Vibration Suppression Function Parameters

Pn number	Parameter name	Setting	Description	Default setting	Unit	Setting range	Power supply OFF to ON
200	Adaptive Filter Selection	Set the operation of the adaptive filter.		0	–	0 to 4	–
		0	Disabled				
		1	One enabled. Frequency limited after adaptation.				
		2	Two enabled. Frequency limited after adaptation.				
		3	One enabled. Adaptation performed at all times.				
		4	Two enabled. Adaptation performed with 1 filter at all times.				
201	Notch 1 Frequency Setting	Set the notch frequency of resonance suppression notch filter 1.		5000	Hz	50 to 5,000	–
202	Notch 1 Width Setting	Set the notch width of the resonance suppression notch filter 1.		2	–	0 to 20	–
203	Notch 1 Depth Setting	Set the notch depth of resonance suppression notch filter 1.		0	–	0 to 99	–
204	Notch 2 Frequency Setting	Set the notch frequency of resonance suppression notch filter 2.		5000	Hz	50 to 5,000	–
205	Notch 2 Width Setting	Set the notch width of the resonance suppression notch filter 2.		2	–	0 to 20	–
206	Notch 2 Depth Setting	Set the notch depth of resonance suppression notch filter 2.		0	–	0 to 99	–
207	Notch 3 Frequency Setting	Set the notch frequency of resonance suppression notch filter 3. This is set automatically when an adaptive notch is enabled.		5000	Hz	50 to 5,000	–
208	Notch 3 Width Setting	Set the notch width of the resonance suppression notch filter 3. This is set automatically when an adaptive notch is enabled.		2	–	0 to 20	–
209	Notch 3 Depth Setting	Set the notch depth of resonance suppression notch filter 3. This is set automatically when an adaptive notch is enabled.		0	–	0 to 99	–
210	Notch 4 Frequency Setting	Set the notch frequency of resonance suppression notch filter 4. This is set automatically when an adaptive notch is enabled.		5000	Hz	50 to 5,000	–
211	Notch 4 Width Setting	Set the notch width of the resonance suppression notch filter 4. This is set automatically when an adaptive notch is enabled.		2	–	0 to 20	–

Pn number	Parameter name	Setting	Description	Default setting	Unit	Setting range	Power supply OFF to ON
212	Notch 4 Depth Setting	Set the notch depth of resonance suppression notch filter 4. This is set automatically when an adaptive notch is enabled.		0	–	0 to 99	–
213	Damping Filter Selection	Select the damping filter switching method.		0	–	0 to 3	–
		0	Enabled				
		1	When DF-SEL1 input open: Damping filter 1 and 3 enabled When DF-SEL1 input shorted: Damping filter 2 and 4 enabled				
		2	When DF-SEL1 open and DF-SEL2 open: Damping filter 1 enabled When DF-SEL1 shorted and DF-SEL2 open: Damping filter 2 enabled When DF-SEL1 open and DF-SEL2 shorted: Damping filter 3 enabled When DF-SEL1 shorted and DF-SEL2 shorted: Damping filter 4 enabled				
		3	Forward direction: Damping filter 1 and 3 enabled Reverse direction: Damping filter 2 and 4 enabled				
214	Damping Frequency 1	Set the damping frequency 1. The function is enabled if the set value is 10 (= 1 Hz) or greater.		0	0.1 Hz	0 to 2,000	–
215	Damping Filter 1 Setting	Finely adjust damping control function 1. If torque saturation occurs, lower this setting; to increase responsiveness, raise this setting.		0	0.1 Hz	0 to 1,000	–
216	Damping Frequency 2	Set the damping frequency 2. The function is enabled if the set value is 10 (= 1 Hz) or greater.		0	0.1 Hz	0 to 2,000	–
217	Damping Filter 2 Setting	Finely adjust damping control function 2. If torque saturation occurs, lower this setting; to increase responsiveness, raise this setting.		0	0.1 Hz	0 to 1,000	–
218	Damping Frequency 3	Set the damping frequency 3. The function is enabled if the set value is 10 (= 1 Hz) or greater.		0	0.1 Hz	0 to 2,000	–
219	Damping Filter 3 Setting	Finely adjust damping control function 3. If torque saturation occurs, lower this setting; to increase responsiveness, raise this setting.		0	0.1 Hz	0 to 1,000	–
220	Damping Frequency 4	Set the damping frequency 4. The function is enabled if the set value is 10 (= 1 Hz) or greater.		0	0.1 Hz	0 to 2,000	–
221	Damping Filter 4 Setting	Finely adjust damping control function 4. If torque saturation occurs, lower this setting; to increase responsiveness, raise this setting.		0	0.1 Hz	0 to 1,000	–

Pn number	Parameter name	Setting	Description	Default setting	Unit	Setting range	Power supply OFF to ON
222	Position Command Filter Time Constant	Set the time constant of the first-order lag filter for the position command.		0	0.1 ms	0 to 10,000	–
223	Smoothing Filter Time Constant	Set the time constant of the FIR filter for the position command.		0	0.1 ms	0 to 10,000	–

Speed, Torque Control, and Fully-Closed Control Parameters

Pn number	Parameter name	Setting	Description	Default setting	Unit	Setting range	Power supply OFF to ON
300	Command Speed Selection	Select the speed command when using speed control.		0	–	0 to 3	–
		0	Analog speed command				
		1	No. 1 Internally Set Speed to No. 4 Internally Set Speed (Pn304 to Pn307)				
		2	No. 1 Internally Set Speed to No. 4 Internally Set Speed (Pn304 to Pn306), analog speed command				
		3	No. 1 Internally Set Speed to No. 8 Internally Set Speed (Pn304 to Pn311)				
301	Speed Command Direction Selection	Select the method for designating the direction for the speed command		0	–	0 or 1	–
		0	Specified with the sign				
		1	Specified with VSIGN				
302	Speed Command Scale	Set the input gain for the analog speed command input.		500	(r/min)/V	10 to 2,000	–
303	Analog Speed Command Rotation Direction Switching	Set the polarity for analog speed commands.		1	–	0 or 1	–
		0	+Voltage: Forward direction -Voltage: Reverse direction				
		1	+Voltage: Reverse direction -Voltage: Forward direction				
304	No. 1 Internally Set Speed	Set the No. 1 internal speed command value.		0	r/min	-20,000 to 20,000	–
305	No. 2 Internally Set Speed	Set the No. 2 internal speed command value.		0	r/min		–
306	No. 3 Internally Set Speed	Set the No. 3 internal speed command value.		0	r/min		–
307	No. 4 Internally Set Speed	Set the No. 4 internal speed command value.		0	r/min		–
308	No. 5 Internally Set Speed	Set the No. 5 internal speed command value.		0	r/min		–
309	No. 6 Internally Set Speed	Set the No. 6 internal speed command value.		0	r/min		–
310	No. 7 Internally Set Speed	Set the No. 7 internal speed command value.		0	r/min		–
311	No. 8 Internally Set Speed	Set the No. 8 internal speed command value.		0	r/min		–
312	Soft Start Acceleration Time	Set the acceleration processing acceleration time for speed commands.		0	ms/(1,000 r/min)	0 to 10,000	–
313	Soft Start Deceleration Time	Set the deceleration processing acceleration time for speed commands.		0	ms/(1,000 r/min)	0 to 10,000	–

Pn number	Parameter name	Setting	Description	Default setting	Unit	Setting range	Power supply OFF to ON
314	S-curve Acceleration/ Deceleration Time Setting	Set the acceleration/deceleration processing S-curve time for speed commands.		0	ms	0 to 1,000	–
315	Zero Speed Designation Selection	Select the function of the zero speed designation input (ZEROSPD).		0	–	0 to 3	–
		0	Disabled				
		1	The speed command is 0.				
		2	If the speed command is 0 and the actual speed is less than the zero speed designation, the servo is locked.				
		3	If the speed command is less than the zero speed designation level, the speed command becomes 0 and the servo is locked.				
316	Position Lock Level Setting	Set the threshold for position lock moving.		30	r/min	10 to 20,000	–
317	Torque Command/ Speed Limit Selection	Select the torque command and speed limit value.		0	–	0 to 2	–
		0	Torque command: Analog input 1 Speed limit: Pn321 set value				
		1	Torque command: Analog input 2 Speed limit: Analog input 1				
		2	Torque command: Analog input 1 Speed limit: Pn321 and Pn322 set values				
318	Torque Command Direction Selection	Select the method for selecting the direction for the torque command.		0	–	0 or 1	–
		0	Specified with the sign				
		1	Specified with VSIGN				
319	Torque Command Scale	Set the input gain for analog torque command input.		30	0.1 V/ 100%	10 to 100	–
320	Analog Torque Command Rotation Direction Switching	Set the analog torque command input polarity.		0	–	0 or 1	–
		0	Forward operation				
		1	Reverse operation				
321	Speed Limit Value Setting	Set the speed limit value.		0	r/min	0 to 20,000	–
322	Reverse Direction Speed Limit Value Setting	Switch the speed limit value according to the direction.		0	r/min	0 to 20,000	–
323	External Feedback Pulse Type Selection	Select the external feedback pulse type.		0	–	0 to 2	Yes
		0	Phase AB output				
		1	Incremental encoder with serial communications				
		2	Absolute encoder with serial communications				
324	External Feedback Pulse Dividing Numerator	Set the external feedback pulse dividing numerator.		0	–	0 to 2^{20}	Yes

Pn number	Parameter name	Setting	Description	Default setting	Unit	Setting range	Power supply OFF to ON
325	External Feedback Pulse Dividing Denominator	Set the external feedback pulse dividing denominator.		10000	–	1 to 2^{20}	Yes
326	External Feedback Pulse Direction Switching	Reverse the external feedback pulse count direction by changing the setting.		0	–	0 or 1	Yes
		0	Count direction not reversed				
		1	Count direction reversed				
327	External Feedback Pulse Phase-Z Setting	Set disconnection detection in the Phase-Z unconnected state when a phase AB output type external feedback pulse is used.		0	–	0 or 1	Yes
		0	Enabled				
		1	Disabled				
328	Internal/External Feedback Pulse Error Counter Overflow Level	Set the threshold for feedback pulse deviation errors.		16000	Command units	1 to 2^{27}	Yes
329	Internal/External Feedback Pulse Error Counter Reset	Clear to 0 the feedback pulse error value for each set rotation speed.		0	Rotations	0 to 100	Yes

Interface Monitor Setting Parameters

Pn number	Parameter name	Setting	Description	Default setting	Unit	Setting range	Power supply OFF to ON
400	Input Signal Selection 1	Set the input signal 1 function and logic.		8553090	–	0 to 00FFFFFFh	Yes
401	Input Signal Selection 2	Set the input signal 2 function and logic.		8487297	–	0 to 00FFFFFFh	Yes
402	Input Signal Selection 3	Set the input signal 3 function and logic.		9539850	–	0 to 00FFFFFFh	Yes
403	Input Signal Selection 4	Set the input signal 4 function and logic.		394758	–	0 to 00FFFFFFh	Yes
404	Input Signal Selection 5	Set the input signal 5 function and logic.		4108	–	0 to 00FFFFFFh	Yes
405	Input Signal Selection 6	Set the input signal 6 function and logic.		197379	–	0 to 00FFFFFFh	Yes
406	Input Signal Selection 7	Set the input signal 7 function and logic.		3847	–	0 to 00FFFFFFh	Yes
407	Input Signal Selection 8	Set the input signal 8 function and logic.		263172	–	0 to 00FFFFFFh	Yes
408	Input Signal Selection 9	Set the input signal 9 function and logic.		328965	–	0 to 00FFFFFFh	Yes
409	Input Signal Selection 10	Set the input signal 10 function and logic.		3720	–	0 to 00FFFFFFh	Yes

Pn number	Parameter name	Setting	Description	Default setting	Unit	Setting range	Power supply OFF to ON
410	Output Signal Selection 1	Set the output signal 1 function allocation.		197379	–	0 to 00FFFFFFh	Yes
411	Output Signal Selection 2	Set the output signal 2 function allocation.		131586	–	0 to 00FFFFFFh	Yes
412	Not used	Do not change the set value.		-	–	–	–
413	Output Signal Selection 4	Set the output signal 4 function allocation.		328964	–	0 to 00FFFFFFh	Yes
416	Analog Monitor 1 Selection	Select the type for analog monitor 1.		0	–	0 to 21	–
		0	Motor speed				
		1	Position command speed				
		2	Internal position command speed				
		3	Speed Control Command				
		4	Torque command				
		5	Position command error				
		6	Encoder Position Error				
		7	Fully-closed Error				
		8	Hybrid Error				
		9	P-N voltage				
		10	Regeneration load ratio				
		11	Overload load ratio				
		12	Forward direction torque limit				
		13	Reverse direction torque limit				
		14	Speed limit value				
		15	Inertia Ratio				
		16	Analog input 1				
		17	Analog input 2				
		18	Analog input 3				
		19	Encoder temperature				
		20	Drive temperature				
		21	Encoder 1-rotation data				
417	Analog Monitor 1 Scale Setting	Set the output gain for analog monitor 1.		0	–	0 to 214,748,364	–
418	Analog Monitor 2 Selection	Select the type for analog monitor 2. The set values for this parameter are the same as Analog Monitor 1 Type (Pn416).		4	–	0 to 21	–
419	Analog Monitor 2 Scale Setting	Select the output gain for analog monitor 2.		0	–	0 to 214,748,364	–

Pn number	Parameter name	Setting	Description	Default setting	Unit	Setting range	Power supply OFF to ON
421	Analog Monitor Output Setting	Select the analog monitor output voltage method.		0	–	0 to 2	–
		0	Output range: -10 to 10 V Data output: Positive, negative				
		1	Output range: 0 to 10 V Data output: Positive, negative				
		2	Output range: 0 to 10 V Data output: Positive, negative				
422	Analog Input 1 Offset	Set the analog input 1 offset.		0	0.359 mV	-5,578 to 5,578	–
423	Analog Input 1 Filter Time Constant	Set the analog input 1 filter.		0	0.01 ms	0 to 6,400	–
424	Excessive Analog Input 1	Set the voltage after offset for the excess level of analog input 1 input voltage.		0	0.1 V	0 to 100	–
425	Analog Input 2 Offset	Set the analog input 2 offset.		0	5.86 mV	-342 to 342	–
426	Analog Input 2 Filter Time Constant	Set the analog input 2 filter.		0	0.01 ms	0 to 6,400	–
427	Excessive Analog Input 2	Set the voltage after offset for the excess level of analog input 2 input voltage.		0	0.1 V	0 to 100	–
428	Analog Input 3 Offset	Set the analog input 3 offset.		0	5.86 mV	-342 to 342	–
429	Analog Input 3 Filter Time Constant	Set the analog input 3 filter.		0	0.01 ms	0 to 6,400	–
430	Excessive Analog Input 3	Set the voltage after offset for the excess level of analog input 3 input voltage.		0	0.1 V	0 to 100	–
431	Positioning Completion Range 1	Set the allowed number of pulses for the positioning completion range.		10	Command units	0 to 262,144	–
432	Positioning Completion Condition Selection	Set the judgment conditions for positioning completion output.		0	–	0 to 3	–
		0	Positioning completion output turns ON when the position error is within the Positioning Completion Range 1 (Pn431).				
		1	Positioning completion output turns ON when the position error is within the Positioning Completion Range 1 (Pn431) and there is no position command.				
		2	Positioning completion output turns ON when the zero speed detection signal is ON, the position error is within the Positioning Completion Range 1 (Pn431), and there is no position command.				
		3	Positioning completion output turns ON when the position error is within the Positioning Completion Range 1 (Pn431) and there is no position command. The ON status will then be held until the next position command is received.				
433	Positioning Completion Hold Time	Set the positioning completion hold time.		0	1 ms	0 to 30,000	–
434	Zero Speed Detection	Set the detection threshold for zero speed (ZSP).		50	r/min	10 to 20,000	–
435	Speed Conformity Detection Range	Set the detection threshold for speed conformity output (VCMP) with the difference between the speed command and the actual speed.		50	r/min	10 to 20,000	–

Pn number	Parameter name	Setting	Description	Default setting	Unit	Setting range	Power supply OFF to ON
436	Rotation Speed for Motor Rotation Detection	Set the detection threshold for the motor rotation speed detection output (TGON).		1000	r/min	10 to 20,000	–
437	Brake Timing when Stopped	Set the operation time for the mechanical brake at stop.		0	1 ms	0 to 10,000	–
438	Brake Timing during Operation	Set the operation time for the mechanical brake during operation.		0	1 ms	0 to 10,000	–
439	Brake Release Speed Setting	Set the speed threshold for mechanical brake output judgment during operation.		30	r/min	30 to 3,000	–
440	Warning Output Selection 1	Select the warning type to be output by Warning Output 1.		0	–	0 to 10	–
		0	An OR output of all alarm status				
		1	Overload warning				
		2	Excessive regeneration warning				
		3	Battery warning				
		4	Fan warning				
		5	Encoder communications warning				
		6	Encoder overheating warning				
		7	Vibration detection warning				
		8	Service life detection warning				
		9	External encoder error warning				
		10	External encoder communications error warning				
441	Warning Output Selection 2	Select the warning type to be output by Warning Output 2. The relationships among the set values for this parameter are the same as for Warning Output Selection 1 (Pn440).		0	–	0 to 10	–
442	Positioning Completion Range 2	Set the allowable number of pulses for the second positioning completion range.		10	Command units	0 to 262,144	–

Expansion Parameters

Pn number	Parameter name	Setting	Description	Default setting	Unit	Setting range	Power supply OFF to ON
500	Electronic Gear Ratio Numerator 2	Set the electronic gear ratio. If Pn500, Pn501, Pn502 = 0, the encoder resolution is set as the numerator. Electronic Gear Ratio Numerator 2 (Pn500) or Electronic Gear Ratio Numerator 3 (Pn501) or Electronic Gear Ratio Numerator 4 (Pn502) / Electronic Gear Ratio Denominator (Pn010)		0	–	0 to 2^{30}	–
501	Electronic Gear Ratio Numerator 3			0	–	0 to 2^{30}	–
502	Electronic Gear Ratio Numerator 4			0	–	0 to 2^{30}	–
503	Encoder Dividing Denominator	Set the denominator when the number of pulses per motor rotation in pulse regeneration is not an integer.		0	–	0 to 262,144	Yes

Pn number	Parameter name	Setting	Description	Default setting	Unit	Setting range	Power supply OFF to ON
504	Drive Prohibition Input Selection	Set the operation to be performed upon forward/ reverse direction drive prohibition input.		1	–	0 to 2	Yes
		0	Forward or reverse direction drive prohibition input enabled				
		1	Forward or reverse direction drive prohibition input disabled				
		2	Forward or reverse direction drive prohibition input enabled				
505	Stop Selection for Drive Prohibition Input	Make the setting upon drive prohibition input.		0	–	0 to 2	Yes
		0	The torque in the drive prohibit direction is disabled, and the dynamic brake is activated.				
		1	The torque in the drive prohibit direction is disabled, and free-run deceleration is performed.				
		2	The torque in the drive prohibit direction is disabled, and an emergency stop is performed.				
506	Stop Selection with Servo OFF	Set the stop operation when the servo is turned OFF.		0	–	0 to 9	–
		0	During deceleration: Dynamic brake After stopping: Dynamic brake Error counter: Clear				
		1	During deceleration: Free-run After stopping: Dynamic brake Error counter: Clear				
		2	During deceleration: Dynamic brake After stopping: Servo free Error counter: Clear				
		3	During deceleration: Free-run After stopping: Servo free Error counter: Clear				
		4	During deceleration: Dynamic brake After stopping: Dynamic brake Error counter: Hold				
		5	During deceleration: Free-run After stopping: Dynamic brake Error counter: Hold				
		6	During deceleration: Dynamic brake After stopping: Servo free Error counter: Hold				
		7	During deceleration: Free-run After stopping: Servo free Error counter: Hold				
		8	During deceleration: Emergency stop After stopping: Dynamic brake Error counter: Clear				
		9	During deceleration: Emergency stop After stopping: Servo free Error counter: Clear				

Pn number	Parameter name	Setting	Description	Default setting	Unit	Setting range	Power supply OFF to ON
507	Stop Selection with Main Power Supply OFF	Set the stop operation when the main power supply is turned OFF. The set values for this parameter are the same as Stop Selection with Servo OFF (Pn506).		0	–	0 to 9	–
508	Undervoltage Alarm Selection	Select whether to trip the LV or turn OFF the servo if there is a main power supply alarm.		1	–	0 or 1	–
509	Momentary Hold Time	Set the main power supply alarm detection time.		70	1 ms	70 to 2,000	Yes
510	Stop Selection for Alarm Detection	Set the alarm sequence.		0	–	0 to 7	–
		0	During deceleration: Dynamic brake After stopping: Dynamic brake				
		1	During deceleration: Free-run After stopping: Dynamic brake				
		2	During deceleration: Dynamic brake After stopping: Servo free				
		3	During deceleration: Free-run After stopping: Servo free				
		4	During Emergency stop alarm deceleration: Emergency stop During deceleration: Dynamic brake After stopping: Dynamic brake				
		5	During Emergency stop alarm deceleration: Emergency stop During deceleration: Free-run After stopping: Dynamic brake				
		6	During Emergency stop alarm deceleration: Emergency stop During deceleration: Dynamic brake After stopping: Servo free				
		7	During Emergency stop alarm deceleration: Emergency stop During deceleration: Free-run After stopping: Servo free				
511	Immediate Stop Torque	Set the torque limit for immediate stops.		0	%	0 to 500	–
512	Overload Detection Level Setting	Set the overload detection level.		0	%	0 to 500	–
513	Overspeed Detection Level Setting	Set the overspeed error detection level.		0	r/min	0 to 20,000	–
514	Overrun Limit Setting	Set the motor over-travel distance for position commands.		10	0.1 Rotations	0 to 1,000	–
515	Control Input Signal Read Setting	Select from one of 4 values for the IF read cycle.		0	–	0 to 3	Yes
		0	0.166 ms				
		1	0.333 ms				
		2	1 ms				
		3	1.666 ms				
516	Alarm Reset Condition Setting	Set the alarm clear input detection method.		0	–	0 or 1	Yes
		0	120 ms				
		1	Follow the Control Input Signal Read Setting (Pn515).				

Pn number	Parameter name	Setting	Description	Default setting	Unit	Setting range	Power supply OFF to ON
517	Error Counter Reset Condition Selection	Set the clear condition for the error counter reset input signal.		0	–	0 to 4	–
		0	Disabled				
		1	Clears the error counter with the level. (Shorted for 500 μs or longer)				
		2	Clears the error counter with the level. (Shorted for 1 ms or longer)				
		3	Clears the error counter with the edge. (Change from open to shorted for 100 μs or longer)				
		4	Clears the error counter with the edge. (Change from open to shorted 1 ms or longer)				
518	Command Pulse Prohibition Input Setting	Enable or disable the command pulse prohibition input signals (INH).		1	–	0 or 1	–
		0	Enabled				
		1	Disabled				
519	Command Pulse Prohibition Input Read Setting	Select the signal read cycle for the command pulse prohibition input.		0	–	0 to 4	Yes
		0	0.166 ms				
		1	0.333 ms				
		2	1 ms				
		3	1.666 ms				
		4	0.166 ms				
520	Position Setting Unit Selection	Select the positioning completion range and error counter overflow level setting unit.		0	–	0 or 1	Yes
		0	Command unit				
		1	Encoder unit				
521	Torque Limit Selection	Set the forward or reverse direction torque limit selection method.		1	–	0 to 6	–
		0	Use P-ATL and N-ATL as analog torque limit inputs.				
		1	Pn013 is the limit value for both forward and reverse directions.				
		2	Forward operation: Set by Pn013, Reverse operation: Set by Pn522.				
		3	When TL-SEL input is open: Use Pn013. When TL-SEL input is shorted: Use Pn522.				
		4	Use P-ATL and N-ATL as analog torque limit inputs.				
		5	Use P-ATL and N-ATL as analog torque limit inputs.				
		6	When TL-SEL input is open: Forward direction, use Pn013; Reverse direction, use Pn522. When TL-SEL input is shorted: Forward direction, use Pn525; Reverse direction, use Pn526.				
522	No. 2 Torque Limit	Set the No. 2 limit value for the motor output torque.		500	%	0 to 500	–
523	Torque Limit Switching Setting 1	Set the change rate (fluctuate) for when the torque limit is switched from No. 1 to No. 2.		0	ms/ 100%	0 to 4,000	–

Pn number	Parameter name	Setting	Description	Default setting	Unit	Setting range	Power supply OFF to ON
524	Torque Limit Switching Setting 2	Set the change rate (fluctuate) for when the torque limit is switched from No. 2 to No. 1.		0	ms/ 100%	0 to 4,000	–
525	Forward External Torque Limit	Set the forward direction torque limit for TL-SEL input when Pn521 Torque Limit Selection is set to 6.		500	%	0 to 500	–
526	Reverse External Torque Limit	Set the reverse direction torque limit for TL-SEL input when Pn521 Torque Limit Selection is set to 6.		500	%	0 to 500	–
527	Analog Torque Limit Scale	Set the gain of conversion for analog torque limit input.		30	0.1 V/ 100%	10 to 100	–
528	Default Display	Select the data to be displayed on the 7-segment LED initially when the control power supply is turned ON.		1		0 to 35	Yes
		0	Position command error		Command units		
		1	Motor speed		r/min		
		2	Position command speed		r/min		
		3	Speed Control Command		r/min		
		4	Torque command		%		
		5	Total encoder pulses		Pulses		
		6	Total command pulses		Pulses		
		8	Total External Encoder Feedback Pulses		Pulses		
		9	Control mode		–		
		10	I/O signal status		–		
		11	Analog input value		V		
		12	Alarm factor, history		–		
		13	Warning number		–		
		14	Regeneration resistance load ratio		%		
		15	Overload load ratio		%		
		16	Inertia Ratio		%		
		17	Reason for no rotation		–		
		18	Display of the number of I/O signal changes		times		
		20	Absolute encoder data		–		
		21	Absolute external encoder position		–		
		22	Monitor for the number of encoder communications errors		times		
		23	Display of axis numbers for communication		–		
		24	Position error (encoder unit)		–		
		25	External encoder error (external encoder unit)		–		
		26	Hybrid error		Command units		
		27	P-N voltage		V		
		28	Soft version		–		

Pn number	Parameter name	Setting	Description	Default setting	Unit	Setting range	Power supply OFF to ON
528	Default Display	29	Drive serial number		–	0 to 35	Yes
		30	Motor serial number		–		
		31	Accumulative operation time		h		
		32	Automatic Motor Recognition Function		–		
		33	Temperature Information		°C		
		35	Safety status monitor		–		
531	Axis Number	Set the axis number for communication.		1	–	0 to 127	Yes
532	Command Pulse Input Maximum Setting	Set the maximum command pulse input.		4000	kpps	250 to 4,000	Yes
533	Pulse Regeneration Limit Output Setting	Set the detection of pulse regeneration limit error.		0	–	0 or 1	Yes
		0	Disabled				
		1	Enabled				
535	Front Key Protection Setting	Set the operation limit for the front panel.		0	–	0 or 1	Yes
		0	Operation not blocked				
		1	Operation blocked				

Special Setting Parameters

Pn number	Parameter name	Setting	Description	Default setting	Unit	Setting range	Power supply OFF to ON
600	Analog Torque Feed-forward Gain Setting	Set the input gain for analog torque feed forward. 0 to 9 will be disabled.		0	0.1 V/ 100%	0 to 100	–
602	Excessive Speed Error Setting	Set the detection level between the internal position command speed and the actual speed (i.e., the speed error).		0	r/min	0 to 20000	–
604	Jog Speed	Set the command speed during JOG trial operation (speed control).		300	r/min	0 to 500	–
605	Gain 3 Effective Time	Set effective time of gain 3 of 3-step gain switching.		0	0.1 ms	0 to 10,000	–
606	Gain 3 Ratio Setting	Set gain 3 as a multiple of gain 1.		100	%	50 to 1,000	–
607	Torque Command Value Offset	Set offset torque to add to torque command.		0	%	-100 to 100	–
608	Forward Direction Torque Offset	Set the value to add to a torque command for forward direction operation.		0	%	-100 to 100	–
609	Reverse Direction Torque Offset	Set the value to add to a torque command for reverse direction operation.		0	%	-100 to 100	–
610	Function Expansion Setting	Set the function expansion. The setting contents vary depending on the function.		0	–	0 to 63	–
611	Electric Current Response Setting	Make fine adjustment to electric current response. The default setting is 100%.		100	%	50 to 100	–
613	Inertia Ratio 2	Set the inertia ratio switching.		250	–	0 to 10,000	–
614	Alarm Detection Allowable Time Setting	Set the allowable time until stopping when an emergency stop is actuated upon alarm detection.		200	ms	0 to 1,000	–
615	Overspeed Detection Level Setting at Immediate Stop	During an emergency stop upon alarm detection, if the motor speed exceeds this set value, this is an overspeed 2 error.		0	r/min	0 to 20,000	–
616	Absolute Interface Function Selection	Select the absolute encoder data transfer.		1	–	0 or 1	Yes
		0	Disabled				
		1	Enabled				
617	Front Panel Parameter Write Selection	Select the EEPROM write specifications when a parameter is changed.		0	–	0 or 1	Yes
		0	Writing not to be performed when a parameter is changed.				
		1	Writing to be performed when a parameter is changed.				
618	Power Supply ON Initialization Time	Set initialization time after power supply ON to the standard 1.5 s plus some.		0	0.1 s	0 to 100	Yes

Pn number	Parameter name	Setting	Description	Default setting	Unit	Setting range	Power supply OFF to ON
619	Encoder Phase-Z Setting	Finely adjust the encoder phase-Z width when the number of output pulses per motor rotation after the division of pulse output is not an integer.		0	Pulses	0 to 32,767	Yes
620	External Encoder Phase-Z Expansion Setting	Set the external encoder phase-Z output width.		0	μs	0 to 400	Yes
621	Serial Absolute External Encoder Phase-Z Setting	Set the phase-Z regeneration position when the serial absolute external encoder is used.		0	Pulses	0 to 2^{28}	Yes
622	Phase-AB Regeneration Method Selection for External Encoder of Phase-AB Output Type	Select the regeneration method of pulse outputs OA and OB when an external encoder of phase AB-output type is used.		0	–	0 or 1	Yes
		0	Without signal regeneration				
		1	With signal regeneration				
623	Disturbance Torque Compensation Gain	Set the compensation gain for the disturbance torque.		0	%	-100 to 100	–
624	Disturbance Observer Filter Setting	Set the filter time constant for disturbance torque compensation.		53	0.01 ms	10 to 2,500	–
627	Warning Latch Hold Time Selection	Select the warning latch time.		5	s	0 to 10	Yes
		0	Latch time infinite				
		1 to 10	Latch time of 1 to 10 s				
631	Realtime Autotuning Estimated Speed Selection	Set the load characteristics estimated speed when realtime autotuning is enabled.		0	–	0 to 3	–
		0	Finalize estimated results when load estimation becomes stable.				
		1	Estimates every minute from the load characteristic changes.				
		2	Estimates every second from the load characteristic changes.				
		3	Estimates the optimum speed from the load characteristic changes.				
632	Realtime Autotuning Customization Mode Setting	Set the Customization Mode detail for realtime autotuning.		0	–	-32,768 to 32,767	–
633	Absolute Encoder Initial Pulse Regeneration Speed	Set the pulse regeneration speed when the initial pulse is output.		1000	r/min	1,000 to 3,000	–
634	Hybrid Vibration Suppression Gain	Set the hybrid vibration suppression gain during fully-closed control.		0	0.1/s	0 to 30,000	–
635	Hybrid Vibration Suppression Filter	Set the hybrid vibration suppression filter time constant during fully-closed control.		10	0.01 ms	0 to 6,400	–

Pn number	Parameter name	Setting	Description	Default setting	Unit	Setting range	Power supply OFF to ON
637	Vibration Detection Threshold	Set the vibration detection threshold. If torque vibration that exceeds this setting is detected, the vibration detection warning will occur.		0	0.1%	0 to 1,000	–
638	Warning Mask Setting	Set a mask for warning detection. If you set the corresponding bit to 1, the corresponding warning detection will be disabled.		4	–	-32,768 to 32,767	Yes

I

Index

Numerics

1,000-r/min Servomotors 2-9, 3-76
2,000-r/min Servomotors 2-8, 3-67
3,000-r/min Servomotors 2-6, 3-55

A

Absolute encoder 3-80
Absolute encoder backup battery 2-18
Absolute encoder battery cable 2-18
Absolute Encoder Initial Pulse Regeneration Speed (Pn633) 8-65
Absolute encoder reset 9-28
Absolute encoder setup 9-4
Absolute Interface Function Selection (Pn616) 8-62
Adaptive filter 6-5
Adaptive Filter Selection (Pn200) 8-20
Alarm clear 9-25
Alarm clear attribute output (ALM-ATB) 3-44
Alarm Generation Allowable Time Setting (Pn614) 8-61
Alarm list 11-6
Alarm output (/ALM) 3-42
Alarm Reset Condition Selection (Pn516) 8-54
Alarm reset input (RESET) 3-33
Allowable current 4-19
Analog Input 1 Filter Time Constant (Pn423) 8-40
Analog Input 1 Offset (Pn422) 8-39
Analog Input 2 Filter Time Constant (Pn426) 8-40
Analog Input 2 Offset (Pn425) 8-40
Analog Input 3 Filter Time Constant (Pn429) 8-41
Analog Input 3 Offset (Pn428) 8-41
Analog input automatic offset adjustment 9-26
Analog Monitor 1 Scale Setting (Pn417) 8-38
Analog Monitor 1 Selection (Pn416) 8-37
Analog Monitor 2 Scale Setting (Pn419) 8-38
Analog Monitor 2 Selection (Pn418) 8-38
Analog monitor cable 2-18
Analog Monitor Output Selection (Pn421) 8-39
Analog Speed Command Rotation Direction Switching (Pn303) 8-26
Analog Torque Command Rotation Direction Switching (Pn320) 8-32
Analog Torque Limit Scale (Pn527) 8-57
Applicable standards 1-11
Axis Number (Pn531) 8-58

B

Backup battery input (BAT) 3-31
Brake cable connector 3-92
Brake cables (robot cables) 2-18
Brake cables (standard cables) 2-14, 2-16
Brake interlock 6-18
Brake interlock output (BKIR) 3-42
Brake Release Speed Setting (Pn439) 8-45
Brake Timing during Operation (Pn438) 8-44
Brake Timing when Stopped (Pn437) 8-44

C

Cable specifications 3-81
Changing the mode 9-7
characteristics 3-2
Clamp core 4-28
Command Pulse Input Maximum Setting (Pn532) 8-58
Command Pulse Input Selection (Pn005) 8-3
Command Pulse Mode Selection (Pn007) 8-4
Command Pulse Prohibition Input Read Setting (Pn519) 8-55
Command Pulse Prohibition Input Setting (Pn518) 8-55
Command Pulse Rotation Direction Switching Selection (Pn006) 8-3
Command Speed Selection (Pn300) 8-25
Communications connector specifications (CN3A) 3-51
Connection examples 12-1
Connector specifications 3-81
Connectors 2-19
Connector-terminal block 2-22
Connector-terminal block cables 2-22, 3-105
Connector-terminal Block Conversion Unit 3-107
Contactor 4-31
Control cable specifications 3-81
Control cables 2-22
Control circuit connector specifications (CND) 4-16
Control I/O connector 3-90
Control I/O connector specifications 3-13
Control input circuits 3-23
Control input signal 3-16
Control Input Signal Read Setting (Pn515) 8-53
Control Mode Selection (Pn001) 8-1
Control Mode Switching (TVSEL) 3-33
Control output circuits 3-39
Control output sequence 3-40

D

Damping control 6-1
Damping Filter 3 Setting (Pn219) 8-23
Damping Filter 4 Setting (Pn221) 8-23
Damping Filter Selection (Pn213) 8-21
Damping filter switching 1 (DFSEL1) 3-34
Damping filter switching 2 (DFSEL2) 3-34
Damping Frequency 1 (Pn214) 8-22
Damping Frequency 2 (Pn216) 8-22
Damping Frequency 3 (Pn218) 8-23
Damping Frequency 4 (Pn220) 8-23
Default Display (Pn528) 8-57
Disturbance Observer Filter Setting (Pn624) 8-63
Disturbance Torque Compensation Gain (Pn623) 8-63
Drive Prohibition Input Selection (Pn504) 8-48

E

EC directive 1-11
Electric Current Response Setting (Pn611) 8-61
Electronic gear function 6-10
Electronic Gear Integer Setting (Pn008) 8-5
Electronic Gear Ratio Denominator (Pn010) 8-5
Electronic Gear Ratio Numerator 1 (Pn009) 8-5
Electronic Gear Ratio Numerator 2 (Pn500) 8-47
Electronic Gear Ratio Numerator 3 (Pn501) 8-47
Electronic Gear Ratio Numerator 4 (Pn502) 8-47

Electronic gear switching 1 (GESEL1) 3-34
Electronic gear switching 2 (GESEL2) 3-34
Emergency stop input (EMG-STP)..... 3-37
Encoder cable 3-81
Encoder cables (robot cables) 2-16, 3-81
Encoder Cables (Standard Cables)..... 2-12, 2-14
Encoder connector specifications (CN2)..... 3-45
Encoder connectors 3-90
Encoder Dividing Denominator (Pn503)..... 8-47
Encoder Dividing Numerator (Pn011) 8-6
Encoder Output Direction Switching Selection (Pn012)..... 8-6
Encoder outputs (Phases A, B and Z)..... 3-41
Encoder specifications 3-80
Error Counter Overflow Level (Pn014) 8-7
Error Counter Reset Condition Selection (Pn517)..... 8-54
Error counter reset input (ECRST)..... 3-33
Error diagnosis using the alarm displays 11-10
Error diagnosis using the operation status..... 11-17
Excessive Analog Input 1 (Pn424) 8-40
Excessive Analog Input 2 (Pn427) 8-40
Excessive Analog Input 3 (Pn430) 8-41
External dimensions..... 2-24
External encoder connector specifications (CN4)..... 3-45
External Feedback Pulse Direction Switching (Pn326)..... 8-34
External Feedback Pulse Dividing Denominator (Pn325)..... 8-34
External Feedback Pulse Dividing Numerator (Pn324)..... 8-34
External Feedback Pulse Phase-Z Setting (Pn327)..... 8-34
External Feedback Pulse Type Selection (Pn323)..... 8-33
External Regeneration Resistor 2-22
External Regeneration Resistor connector specifications (CNC)..... 4-14, 4-16
External Regeneration Resistor dimensions..... 2-55
External Regeneration Resistor Setting (Pn017) 8-8
External Regeneration Resistor specifications..... 3-129

F

Forward Direction Torque Offset (Pn608)..... 8-60
Forward drive prohibition input (POT) 3-32
Forward External Torque Limit (Pn525) 8-57
Forward torque limit input (PCL) 3-32
Front Panel Parameter Write Selection (Pn617) 8-62
Fully-closed Control Mode adjustment..... 10-13
Function Expansion Setting (Pn610)..... 8-60

G

Gain 3 Effective Time (Pn605) 8-60
Gain 3 Ratio Setting (Pn606) 8-60
Gain adjustment..... 10-1
Gain switching (GSEL)..... 3-34
Gain Switching Delay Time in Position Control (Pn116)..... 8-15
Gain Switching Delay Time in Speed Control (Pn121)..... 8-17
Gain Switching Delay Time in Torque Control (Pn125) 8-19
Gain switching function 6-23
Gain Switching Hysteresis in Position Control (Pn118) 8-15
Gain Switching Hysteresis in Speed Control (Pn123) 8-17
Gain Switching Hysteresis in Torque Control (Pn127) 8-19
Gain Switching Input Operating Mode Selection (Pn114) 8-12
Gain Switching Level in Position Control (Pn117).. 8-15
Gain Switching Level in Speed Control (Pn122).... 8-17
Gain Switching Level in Torque Control (Pn126) ... 8-19
General control cable..... 2-22, 3-103
general specifications 3-1
General-purpose input..... 3-26

H

Harmonic current measures 4-34
Hybrid vibration suppression filter..... 8-66
Hybrid vibration suppression gain..... 8-65

I

Improving Control I/O Signal Noise Resistance..... 4-33
Improving encoder cable noise resistance..... 4-32
Incremental encoder 3-80
Inertia Ratio (Pn004)..... 8-3
Inertia Ratio 2 (Pn613)..... 8-61
Inertia ratio switching input (JSEL) 3-38
Input Signal Selection 1 (Pn400) 8-36
Input Signal Selection 10 (Pn409) 8-36
Input Signal Selection 2 (Pn401) 8-36
Input Signal Selection 3 (Pn402) 8-36
Input Signal Selection 4 (Pn403) 8-36
Input Signal Selection 5 (Pn404) 8-36
Input Signal Selection 6 (Pn405) 8-36
Input Signal Selection 7 (Pn406) 8-36
Input Signal Selection 8 (Pn407) 8-36
Input Signal Selection 9 (Pn408) 8-36
Internal/External Feedback Pulse Error Counter Overflow Level (Pn328) 8-34
Internal/External Feedback Pulse Error Counter Reset (Pn329)..... 8-34
Internally set speed control..... 5-19
Internally set speed selection 1, 2 and 3 (VSEL1, 2 and 3) 3-35

J

Jog operation 9-27
Jog Speed (Pn604)..... 8-60

L

Leakage Breaker..... 4-26

M

Main circuit connector specifications (CNA) 3-8, 3-9, 3-11, 4-13, 4-14, 4-15

Main circuit terminal block specifications 3-10, 3-12
Maintenance 11-21
Manual tuning 10-12
Momentary Hold Time (Pn509) 8-50
Monitor connector specifications (CN5) 3-49
Monitor Mode 9-8
Motion Control Unit Cable 3-95
Motor characteristics 3-55
Motor connector specifications (CNB) 3-8, 3-9, 3-11, 4-13, 4-14, 4-15
Motor connector specifications (CNC) 3-9, 3-11
Motor connector specifications (CND) 3-11
Motor general specifications 3-54
Motor power cable 3-83
Motor power cables (robot cables) 2-17
Motor power cables (standard cables) 2-13, 2-15
Mounting brackets (L-brackets for rack mounting) . 2-23
Mounting dimensions 2-24

N

No. 1 Internally Set Speed (Pn304) 8-26
No. 1 Torque Limit (Pn013) 8-7
No. 2 Internally Set Speed (Pn305) 8-27
No. 2 Torque Limit (Pn522) 8-56
No. 3 Internally Set Speed (Pn306) 8-27
No. 4 Internally Set Speed (Pn307) 8-27
No. 5 Internally Set Speed (Pn308) 8-27
No. 6 Internally Set Speed (Pn309) 8-27
No. 7 Internally Set Speed (Pn310) 8-27
No. 8 Internally Set Speed (Pn311) 8-27
No-fuse breaker (NFB) 4-25
Noise filter 4-28
Noise filters for brake power supply 4-28
Notch 1 Depth Setting (Pn203) 8-20
Notch 1 Frequency Setting (Pn201) 8-20
Notch 1 Width Setting (Pn202) 8-20
Notch 2 Depth Setting (Pn206) 8-21
Notch 2 Frequency Setting (Pn204) 8-20
Notch 2 Width Setting (Pn205) 8-20
Notch 3 Depth Setting (Pn209) 8-21
Notch 3 Frequency Setting (Pn207) 8-21
Notch 3 Width Setting (Pn208) 8-21
Notch 4 Depth Setting (Pn212) 8-21
Notch 4 Frequency Setting (Pn210) 8-21
Notch 4 Width Setting (Pn211) 8-21

O

Operation command (RUN) 3-32
Operation Switching when Using Absolute Encoder (Pn015) 8-7
Operational procedure 9-1
Output during speed limit (V-LIMIT) 3-44
Output Signal Selection 1 (Pn410) 8-36
Output Signal Selection 2 (Pn411) 8-36
Output Signal Selection 3 (Pn412) 8-36
Output Signal Selection 4 (Pn413) 8-36
Overload Detection Level Setting (Pn512) 8-52
Overrun Limit Setting (Pn514) 8-53
Overspeed Detection Level Setting (Pn513) 8-53
Overspeed Detection Level Setting at Immediate Stop (Pn615) 8-61

P

Parameter list 12-11
Parameter Setting Mode 9-22
Parameter Write Mode 9-24
Periodic maintenance 11-21
Phase-Z output (open collector output) 3-39
Pin arrangement 3-22
Position Command Filter Time Constant (Pn222) ..8-23
Position command pulse 3-23, 3-24
Position command status output (P-CMD) 3-44
Position control 5-1
Position Control Mode adjustment 10-13
Position Control Unit-Servo Relay Unit cable specifications 3-119
Position feedback output 3-39
Position Gain Switching Time (Pn119) 8-15
Position Lock Level Setting (Pn316) 8-30
Position Loop Gain (Pn100) 8-9
Position Loop Gain 2 (Pn105) 8-11
Position Setting Unit Selection (Pn520) 8-55
Positioning Completion Condition Selection (Pn432) 8-42
Positioning Completion Hold Time (Pn433) 8-42
Positioning completion output 1 (INP1) 3-42
Positioning completion output 2 (INP2) 3-42
Positioning Completion Range 1 (Pn431) 8-41
Positioning Completion Range 2 (Pn442) 8-46
Power cable connector 3-92
Power cables with brakes (robot cables) 3-86
Power cables without brakes (robot cables) 3-83
Power Supply ON Initialization Time (Pn618) 8-62
Preparing for operation 9-2
Protective functions 3-6
Pulse prohibition input (IPG) 3-35
Pulse Regeneration Output Limit Setting (Pn533) ..8-59

R

Radio noise filter 4-28
Reactor 3-131, 4-34
Reactor to reduce harmonic current 4-34
Realtime autotuning 10-3
Realtime Autotuning Customization Mode Setting (Pn632) 8-64
Realtime Autotuning Estimated Speed Selection (Pn631) 8-63
Realtime Autotuning Machine Rigidity Setting (Pn003) 8-2
Realtime Autotuning Mode Selection (Pn002) 8-2
Regeneration absorption capacity 4-37
Regeneration Resistor Selection (Pn016) 8-7
Regenerative energy absorption 4-35
Regenerative energy with an External Regeneration Resistor 4-38
Replacement method 11-3, 11-23
Replacing the absolute encoder battery 11-23
Replacing the battery 11-23
Replacing the Servo Drive 11-3
Replacing the Servomotor 11-3
Reverse Direction Speed Limit Value Setting (Pn322) 8-33
Reverse Direction Torque Offset (Pn609) 8-60
Reverse drive prohibition input (NOT) 3-32

Reverse External Torque Limit (Pn526) 8-57
Reverse torque limit input (NCL) 3-32
Rotation Direction Switching (Pn000) 8-1
Rotation speed characteristics (1,000-r/min Servomotors) 3-79
Rotation speed characteristics (2,000-r/min Servomotors) 3-74
Rotation speed characteristics (3,000-r/min Servomotors) 3-63
Rotation Speed for Motor Rotation Detection (Pn436) 8-43

S

Safety connector specifications (CN8) 3-51
S-curve Acceleration/Deceleration Time Setting (Pn314) 8-28
Sensor input 3-26
Sensor ON input (SEN) 3-31
Sequence output 3-39
Servo Drive and Servomotor combination list 2-10
Servo Drive dimensions 2-24
Servo Drive functions 1-5
Servo Drive installation conditions 4-1
Servo Drive limit 11-22
Servo Drive models 2-5
Servo Drive part names 1-4
Servo ready completed output (READY) 3-42
Servo Relay Unit 2-20, 3-110
Servo Relay Unit cables for Servo Drives 2-20
Servo Relay Unit cables for Position Control Units 2-21
Servomotor installation conditions 4-3, 4-6
Servomotor limit 11-21
Servomotor models 2-6
Setting the mode 9-7
Smoothing Filter Time Constant (Pn223) 8-24
Soft Start Acceleration Time (Pn312) 8-27
Soft Start Deceleration Time (Pn313) 8-28
Speed Command Direction Selection (Pn301) 8-25
Speed command input (REF) 3-23, 3-31
Speed Command Scale (Pn302) 8-26
Speed command sign input (VSIGN) 3-36
Speed command status output (V-CMD) 3-44
Speed Conformity Detection Width (Pn435) 8-43
Speed conformity output (TGON) 3-43
Speed conformity output signal (VCMP) 3-43
Speed control 5-7
Speed Control Mode Adjustment 10-14
Speed Feedback Filter Time Constant (Pn103) 8-11
Speed Feedback Filter Time Constant 2 (Pn108) .. 8-11
Speed Feed-forward Command Filter (Pn111) 8-12
Speed Feed-forward Gain (Pn110) 8-12
Speed limit input (VLIM) 3-23, 3-31
Speed limit value 10-19
Speed Limit Value Setting (Pn321) 8-32
Speed Loop Gain (Pn101) 8-10
Speed Loop Gain 2 (Pn106) 8-11
Speed Loop Integral Time Constant (Pn102) 8-10
Speed Loop Integral Time Constant 2 (Pn107) 8-11
Stop Selection for Alarm Generation (Pn510) 8-51
Stop Selection for Drive Prohibition Input (Pn505) 8-48
Stop Selection with Main Power Supply OFF (Pn507) 8-50
Stop Selection with Servo OFF (Pn506) 8-49
Surge absorber 4-27
Surge suppressor 4-31
Switching control 5-22
Switching Mode in Position Control (Pn115) 8-13
Switching Mode in Speed Control (Pn120) 8-16
Switching Mode in Torque Control (Pn124) 8-18
System block diagrams 1-6
System configuration 1-3

T

Terminal block specifications 4-15, 4-16
Terminal Block Wire Sizes 4-17
Terminal block wiring 4-20
Torque Command Direction Selection (Pn318) 8-31
Torque Command Filter Time Constant (Pn104) ... 8-11
Torque Command Filter Time Constant 2 (Pn109) 8-11
Torque command input (TREF1) 3-31
Torque command input 1 (TREF1) 3-23
Torque command input 2 (TREF2) 3-32
Torque Command Scale (Pn319) 8-32
Torque command sign input (TSIGN) 3-37
Torque Command Value Offset (Pn607) 8-60
Torque Command/Speed Limit Selection (Pn317) 8-30
Torque control 5-14
Torque Control Mode adjustment 10-19
Torque Feed-forward Amount (Pn112) 8-12
Torque Feed-forward Command Filter (Pn113) 8-12
Torque limit 6-32, 6-33
Torque Limit Selection (Pn521) 8-56
Torque limit switching (TLSEL) 3-37
Torque Limit Switching Setting 1 (Pn523) 8-57
Torque Limit Switching Setting 2 (Pn524) 8-57
Torque limiting signal (TLIMT) 3-43
Trial operation 9-33
Troubleshooting 11-1, 11-10

U

UL and cUL standards 1-11
Undervoltage Alarm Selection (Pn508) 8-50
USB connector specifications (CN7) 3-50

V

Vibration detection threshold 8-66

W

Warning Latch Hold Time Selection (Pn627) 8-63
Warning mask setting 8-66
Warning output 1 (WARN1) 3-43
Warning output 2 (WARN2) 3-43
Warning Output Selection 1 (Pn440) 8-45
Warning Output Selection 2 (Pn441) 8-45
Wire sizes 4-19
Wiring conforming to EMC directives 4-21

Z

Zero speed designation (VZERO)..... 3-36
Zero Speed Designation Selection (Pn315) 8-28
Zero Speed Detection (Pn434) 8-42
Zero speed detection signal (ZSP) 3-43

OMRON Corporation **Industrial Automation Company**
Tokyo, JAPAN
Contact: www.ia.omron.com

Regional Headquarters
OMRON EUROPE B.V.
Wegalaan 67-69-2132 JD Hoofddorp
The Netherlands
Tel: (31)2356-81-300/Fax: (31)2356-81-388

OMRON ELECTRONICS LLC
One Commerce Drive Schaumburg,
IL 60173-5302 U.S.A.
Tel: (1) 847-843-7900/Fax: (1) 847-843-7787

OMRON ASIA PACIFIC PTE. LTD.
No. 438A Alexandra Road # 05-05/08 (Lobby 2),
Alexandra Technopark,
Singapore 119967
Tel: (65) 6835-3011/Fax: (65) 6835-2711

OMRON (CHINA) CO., LTD.
Room 2211, Bank of China Tower,
200 Yin Cheng Zhong Road,
PuDong New Area, Shanghai, 200120, China
Tel: (86) 21-5037-2222/Fax: (86) 21-5037-2200

Authorized Distributor:

© OMRON Corporation 2009 All Rights Reserved.
In the interest of product improvement,
specifications are subject to change without notice.

Cat. No. I571-E1-02