At the end of this document you will find links to products related to this catalog. You can go directly to our shop by clicking HERE. HERE

Cable tray RKS-Magic® VA

Cable tray RKS-Magic®

Type	Width mm	Plate thick-ness mm	Length mm		Weight kg/100 m	Item No.
RKSM 610 VA4301	100	0.75	3,050		134.300	**6047 61 3**
RKSM 620 VA4301	200	0.75	3,050		183.000	**6047 64 0**
RKSM 630 VA4301	300	0.75	3,050		239.000	**6047 65 6**
RKSM 610 VA4571	100	0.75	3,050		134.300	**6047 61 4**
RKSM 620 VA4571	200	0.75	3,050		183.000	**6047 64 1**
RKSM 630 VA4571	300	0.75	3,050		239.000	**6047 65 7**

V2A Stainless steel, grade 304 V4A Stainless steel, grade 316 Ti Stained /m

RKSM 60 = efficient magic cable tray system with 60 mm side height.

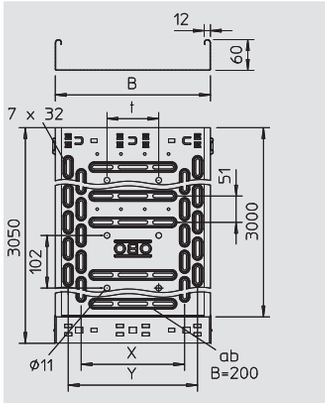

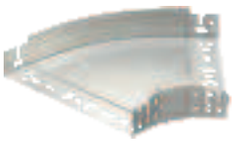

45° bend

Type	Width mm		Pack. pcs	Weight kg/100 pcs.	Item No.
RBM 45 610VA4301	100		1	50.400	**6041 08 0**
RBM 45 620VA4301	200		1	86.000	**6041 08 4**
RBM 45 630VA4301	300		1	128.300	**6041 08 6**
RBM 45 610VA4571	100		1	50.400	**6041 10 0**
RBM 45 620VA4571	200		1	86.000	**6041 10 4**
RBM 45 630VA4571	300		1	128.300	**6041 10 6**

V2A Stainless steel, grade 304 V4A Stainless steel, grade 316 Ti Bright /pc.

45° bend with quick connector system. For all cable tray types of 60 mm side height.

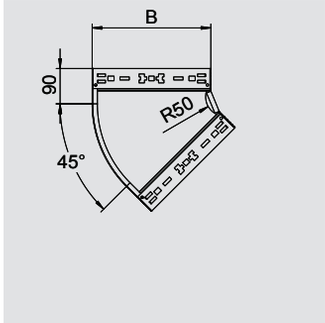

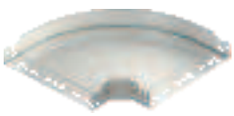

90° bend

Type	Width mm		Pack. pcs	Weight kg/100 pcs.	Item No.
RBM 90 610VA4301	100		1	65.700	**6041 18 0**
RBM 90 620VA4301	200		1	122.100	**6041 18 4**
RBM 90 630VA4301	300		1	192.800	**6041 18 6**
RBM 90 610VA4571	100		1	65.700	**6041 20 0**
RBM 90 620VA4571	200		1	122.100	**6041 20 4**
RBM 90 630VA4571	300		1	192.800	**6041 20 6**

V2A Stainless steel, grade 304 V4A Stainless steel, grade 316 Ti Bright /pc.

90° bend with quick connector system. For all cable tray types of 60 mm side height.

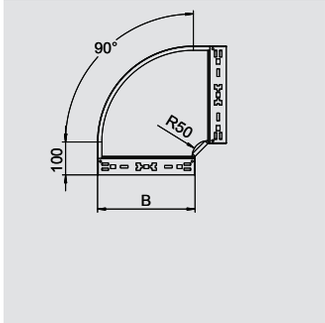

Mounting/branch piece

Type	Width mm		Pack. pcs	Weight kg/100 pcs.	Item No.
RAAM 610 VA4301	100		1	37.900	**6041 27 0**
RAAM 620 VA4301	200		1	50.600	**6041 27 5**
RAAM 630 VA4301	300		1	63.500	**6041 27 7**
RAAM 610 VA4571	100		1	37.900	**6041 29 0**
RAAM 620 VA4571	200		1	50.600	**6041 29 4**
RAAM 630 VA4571	300		1	63.500	**6041 29 6**

V2A Stainless steel, grade 304 V4A Stainless steel, grade 316 Ti Bright /pc.

Mounting/branch piece with quick connector system. For all cable tray types of 60 mm side height.

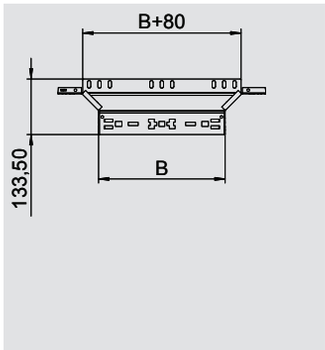

Connector

Type	Side height mm	Width mm		Pack. pcs	Weight kg/100 pcs.	Item No.
KTSMV 610 VA4301	60	100		1	30.500	**6068 95 8**
KTSMV 620 VA4301	60	200		1	37.200	**6068 96 2**
KTSMV 630 VA4301	60	300		1	44.000	**6068 96 4**
KTSMV 610 VA4571	60	100		1	30.500	**6068 98 0**
KTSMV 620 VA4571	60	200		1	37.200	**6068 98 4**
KTSMV 630 VA4571	60	300		1	44.000	**6068 98 6**

V2A Stainless steel, grade 304 V4A Stainless steel, grade 316 Ti Bright /pc.

Cable tray connector with quick fastening for straight, screwless connection of cable trays and fittings with a side height of 60 mm.

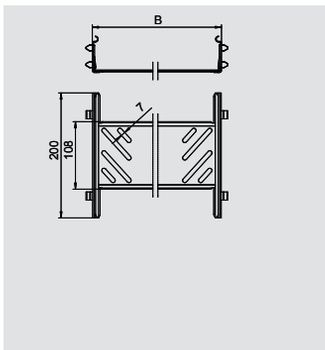

05_BSS_Masterkatalog_Länder_2012 / en / 17/07/2012 (LLExport_04003) / 18/07/2012

Automatización Eléctrica
Especialistas en Automatización

Below is a list of articles with direct links to our shop Electric Automation Network where you can see:

- Quote per purchase volume in real time.
- Online documentation and datasheets of all products.
- Estimated delivery time enquiry in real time.
- Logistics systems for the shipment of materials almost anywhere in the world.
- Purchasing management, order record and tracking of shipments.

To access the product, click on the green button.

Product	Code	Reference	Product link
45° bend with quick connector, 60x100, Stainless steel, grade 304, VA, 1.4301	6041080	RBM 45 610VA4301	Buy on EAN
45° bend with quick connector, 60x200, Stainless steel, grade 304, VA, 1.4301	6041084	RBM 45 620VA4301	Buy on EAN
45° bend with quick connector, 60x300, Stainless steel, grade 304, VA, 1.4301	6041086	RBM 45 630VA4301	Buy on EAN
45° bend with quick connector, 60x100, Stainless steel, grade 316 Ti, VA, 1.4571	6041100	RBM 45 610VA4571	Buy on EAN
45° bend with quick connector, 60x200, Stainless steel, grade 316 Ti, VA, 1.4571	6041104	RBM 45 620VA4571	Buy on EAN
45° bend with quick connector, 60x300, Stainless steel, grade 316 Ti, VA, 1.4571	6041106	RBM 45 630VA4571	Buy on EAN
90° bend with quick connector, 60x100, Stainless steel, grade 304, VA, 1.4301	6041180	RBM 90 610VA4301	Buy on EAN
90° bend with quick connector, 60x200, Stainless steel, grade 304, VA, 1.4301	6041184	RBM 90 620VA4301	Buy on EAN
90° bend with quick connector, 60x300, Stainless steel, grade 304, VA, 1.4301	6041186	RBM 90 630VA4301	Buy on EAN
90° bend with quick connector, 60x100, Stainless steel, grade 316 Ti, VA, 1.4571	6041200	RBM 90 610VA4571	Buy on EAN
90° bend with quick connector, 60x200, Stainless steel, grade 316 Ti, VA, 1.4571	6041204	RBM 90 620VA4571	Buy on EAN
90° bend with quick connector, 60x300, Stainless steel, grade 316 Ti, VA, 1.4571	6041206	RBM 90 630VA4571	Buy on EAN
Mounting/branch piece with quick connector, 60x100, Stainless steel, grade 304, VA, 1.4301	6041270	RAAM 610 VA4301	Buy on EAN
Mounting/branch piece with quick connector, 60x200, Stainless steel, grade 304, VA, 1.4301	6041275	RAAM 620 VA4301	Buy on EAN

Mounting/branch piece with quick connector, 60x300, Stainless steel, grade 304, VA, 1.4301	6041277	RAAM 630 VA4301	Buy on EAN
Mounting/branch piece with quick connector, 60x100, Stainless steel, grade 316 Ti, VA, 1.4571	6041290	RAAM 610 VA4571	Buy on EAN
Mounting/branch piece with quick connector, 60x200, Stainless steel, grade 316 Ti, VA, 1.4571	6041294	RAAM 620 VA4571	Buy on EAN
Mounting/branch piece with quick connector, 60x300, Stainless steel, grade 316 Ti, VA, 1.4571	6041296	RAAM 630 VA4571	Buy on EAN
Cable tray RKSM Magic, quick connector, 60x100x3050, Stainless steel, grade 304, VA, 1.4301	6047613	RKSM 610 VA4301	Buy on EAN
Cable tray RKSM Magic, quick connector, 60x100x3050, Stainless steel, grade 316 Ti, VA, 1.4571	6047614	RKSM 610 VA4571	Buy on EAN
Cable tray RKSM Magic, quick connector, 60x200x3050, Stainless steel, grade 304, VA, 1.4301	6047640	RKSM 620 VA4301	Buy on EAN
Cable tray RKSM Magic, quick connector, 60x200x3050, Stainless steel, grade 316 Ti, VA, 1.4571	6047641	RKSM 620 VA4571	Buy on EAN
Cable tray RKSM Magic, quick connector, 60x300x3050, Stainless steel, grade 304, VA, 1.4301	6047656	RKSM 630 VA4301	Buy on EAN
Cable tray RKSM Magic, quick connector, 60x300x3050, Stainless steel, grade 316 Ti, VA, 1.4571	6047657	RKSM 630 VA4571	Buy on EAN
Straight connector set for cable tray Magic, 60x100x200, Stainless steel, grade 304, VA, 1.4301	6068958	KTSMV 610 VA4301	Buy on EAN
Straight connector set for cable tray Magic, 60x200x200, Stainless steel, grade 304, VA, 1.4301	6068962	KTSMV 620 VA4301	Buy on EAN
Straight connector set for cable tray Magic, 60x300x200, Stainless steel, grade 304, VA, 1.4301	6068964	KTSMV 630 VA4301	Buy on EAN
Straight connector set for cable tray Magic, 60x100x200, Stainless steel, grade 316 Ti, VA, 1.4571	6068980	KTSMV 610 VA4571	Buy on EAN
Straight connector set for cable tray Magic, 60x200x200, Stainless steel, grade 316 Ti, VA, 1.4571	6068984	KTSMV 620 VA4571	Buy on EAN
Straight connector set for cable tray Magic, 60x300x200, Stainless steel, grade 316 Ti, VA, 1.4571	6068986	KTSMV 630 VA4571	Buy on EAN