# Insulated enclosure, HxWxD=240x160x125mm, +mounting rail

**Part no.** CI-K4-125-TS
**Article no.** 206886

Powering Business Worldwide

## Delivery programme

| | | | |
|---|---|---|---|
| Product range | | | CI-K small enclosures |
| Basic function | | | Basic enclosures |
| Product function | | | CI-K empty enclosures |
| Single unit/Complete unit | | | Single unit |
| Degree of Protection | | | Front IP65<br>IP65, with push-through cable entry |
| Degree of Protection | | | Front IP65<br>IP65, with push-through cable entry |
| Material | | | Glass-fibre reinforced polycarbonate |
| Colour | | | Enclosure base RAL 9005, black<br>Operator only RAL 7035, light gray |
| Description | | | Metric cable entry knockouts top, bottom and in the back plate<br>Control cable entry<br>Lamp indicator L-… can be mounted in base knock-out M20/M25 |
| Cable entry | | | hard knockout version |
| **Dimensions** | | | |
| Width | | mm | 160 |
| Height | | mm | 240 |
| Depth | | mm | 125 |
| Dimensions | | mm | 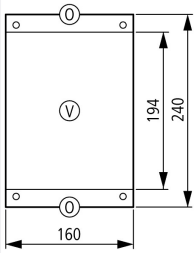 |
| **Enclosure depth** | | | |
| Legend for the graphic | | | Dimensions from top:<br>Mounting depth with mounting plate<br>Mounting depth for mounting rail 7.5 mm height<br>Mounting depth for mounting rail 15 mm height |
| Enclosure depth | | mm | 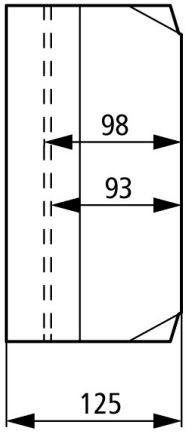 |
| Mounting depth for mounting rail 7.5 mm height | | mm | 93 |
| Features | | | With mounting rail to IEC/EN 60715 |





**Notes**
**0**

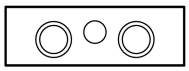

Knockouts
2 x M32/25
1 x M20

V

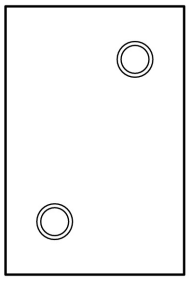

Back plate:
2 x M32/25

# Technical data

## General

| | | |
|---|---|---|
| Standards | | IEC/EN 60529<br>DIN EN 62208 |
| Climatic proofing | | Damp heat, constant, to IEC 60068-2-78<br>Damp heat, cyclic, to IEC 60068-2-30 |
| Ambient temperature | °C | -25 - +70<br>-25 - +40 (with push-through cable entry) |
| Degree of Protection | | Front IP65<br>IP65, with push-through cable entry |
| Power loss | | |
| Max. radiated heat dissipation with separate mounting, ambient air temperature +20 °C | W | 26 |

## Material characteristics

| | | |
|---|---|---|
| Material | | |
| Base | | Glass-fibre reinforced polycarbonate |
| Cover | | Glass-fibre reinforced polycarbonate |
| Surface treatment | | Resistant to corrosion |
| Colour | | |
| Base | | RAL 9005, black (matt) |
| Housing body | | Enclosure cover RAL 7035, light grey (matt) |

## Material properties

| | | |
|---|---|---|
| Electrical | | |
| Track resistance | | CTI 175 (base, to IEC 60112)<br>CTI 175 (cover, to IEC 60112) |
| Surface resistance to IEC 60093 | $\Omega \times 10^{13}$ | 1 |
| Dielectric strength to IEC 60243-1 | kV/mm | 30 |
| Thermal | | |
| Temperature resistant | | -40 °C - 120 °C (enclosure)<br>-40 °C - +80 °C (gasket) |
| Mechanical | | |
| Impact resistance | | IK06 according to EN 50102 |
| max. assembly weights | | |
| Mounting plate | kg | 0.9 |
| Mounting rail | kg | 0.9 |
| Chemical resistance | | |
| Chemical resistant | | Base, Cover<br>Resistant against: Acids < 10 %, mineral oil, alcohol, gasoline, greases, salt solutions<br>Partly resistant to: Acids > 10 %, alcohol<br>Not resistant to: alkalis, benzene<br>Push-through membrane (CI-K1/CI-K2) and sealing material<br>Resistant against: Acids < 10 %, alkalis, benzene, salt solutions<br>Partly resistant to: Acids > 10 %, greases, benzene<br>Not resistant to: Mineral oil, benzene |
| Atmospheric | | |
| Saline spray | | IEC 60068-2-11 |
| UV resistance | | Beneath protective shield |
| Water consumption to DIN EN ISO 62 | % | 0.29 |
| Flammability characteristics | | |
| Glow wire test | | |

| | | | |
|---|---|---|---|
| Flammability characteristics | | | 960 °C/1mm thickness (base, cover; glow wire to VDE 0471 Part 2)<br>650 °C/1mm thick (push-through membrane) to VDE 0471 Part 2) |
| to UL 94 | | | VO/1.5 mm thickness |
| to UL 94 | | | HB |
| Halogen free | | | Yes |

## Design verification as per IEC/EN 61439

| | | | |
|---|---|---|---|
| Technical data for design verification | | | |
| Operating ambient temperature min. | | °C | -25 |
| Operating ambient temperature max. | | °C | 70 |
| Degree of Protection | | | Front IP65<br>IP65, with push-through cable entry |
| Max. radiated heat dissipation with separate mounting, ambient air temperature +20 °C | | W | 26 |
| Flammability characteristics | | | 960 °C/1mm thickness (base, cover; glow wire to VDE 0471 Part 2)<br>650 °C/1mm thick (push-through membrane) to VDE 0471 Part 2) |
| Track resistance | | | CTI 175 (base, to IEC 60112)<br>CTI 175 (cover, to IEC 60112) |
| Surface treatment | | | Resistant to corrosion |
| Impact resistance | | | IK06 according to EN 50102 |
| Temperature resistant | | | -40 °C - 120 °C (enclosure)<br>-40 °C - +80 °C (gasket) |
| UV resistance | | | Beneath protective shield |
| IEC/EN 61439 design verification | | | |
| 10.2 Strength of materials and parts | | | |
| 10.2.2 Corrosion resistance | | | Meets the product standard's requirements. |
| 10.2.3.1 Verification of thermal stability of enclosures | | | Meets the product standard's requirements. |
| 10.2.3.2 Verification of resistance of insulating materials to normal heat | | | Meets the product standard's requirements. |
| 10.2.3.3 Verification of resistance of insulating materials to abnormal heat and fire due to internal electric effects | | | Meets the product standard's requirements. |
| 10.2.4 Resistance to ultra-violet (UV) radiation | | | Please enquire |
| 10.2.5 Lifting | | | Not applicable. |
| 10.2.6 Mechanical impact | | | Does not apply, since the entire switchgear needs to be evaluated. |
| 10.2.7 Inscriptions | | | Meets the product standard's requirements. |
| 10.3 Degree of protection of ASSEMBLIES | | | Meets the product standard's requirements. |
| 10.4 Clearances and creepage distances | | | Meets the product standard's requirements. |
| 10.5 Protection against electric shock | | | Does not apply, since the entire switchgear needs to be evaluated. |
| 10.6 Incorporation of switching devices and components | | | Does not apply, since the entire switchgear needs to be evaluated. |
| 10.7 Internal electrical circuits and connections | | | Is the panel builder's responsibility. |
| 10.8 Connections for external conductors | | | Is the panel builder's responsibility. |
| 10.9 Insulation properties | | | |
| 10.9.2 Power-frequency electric strength | | | Is the panel builder's responsibility. |
| 10.9.3 Impulse withstand voltage | | | Is the panel builder's responsibility. |
| 10.9.4 Testing of enclosures made of insulating material | | | Meets the product standard's requirements. |
| 10.10 Temperature rise | | | The panel builder is responsible for the temperature rise calculation. Eaton will provide heat dissipation data for the devices. |
| 10.11 Short-circuit rating | | | Is the panel builder's responsibility. The specifications for the switchgear must be observed. |
| 10.12 Electromagnetic compatibility | | | Is the panel builder's responsibility. The specifications for the switchgear must be observed. |
| 10.13 Mechanical function | | | The device meets the requirements, provided the information in the instruction leaflet (IL) is observed. |

## Technical data ETIM 6.0

| | | | |
|---|---|---|---|
| Low-voltage industrial components (EG000017) / Empty enclosure for switchgear (EC000712) | | | |
| Electric engineering, automation, process control engineering / Low-voltage switch technology / Component for low-voltage switching technology / Empty housing for switch devices (ecl@ss8.1-27-37-13-01 [AKN343011]) | | | |
| Material housing | | | Plastic |
| Width | | mm | 160 |
| Height | | mm | 240 |

| | | | |
|---|---|---|---|
| Depth | | mm | 125 |
| With transparent cover | | | No |
| Suitable for emergency stop | | | Yes |
| Model | | | Surface mounting |
| Degree of protection (IP) | | | IP65 |

## Dimensions

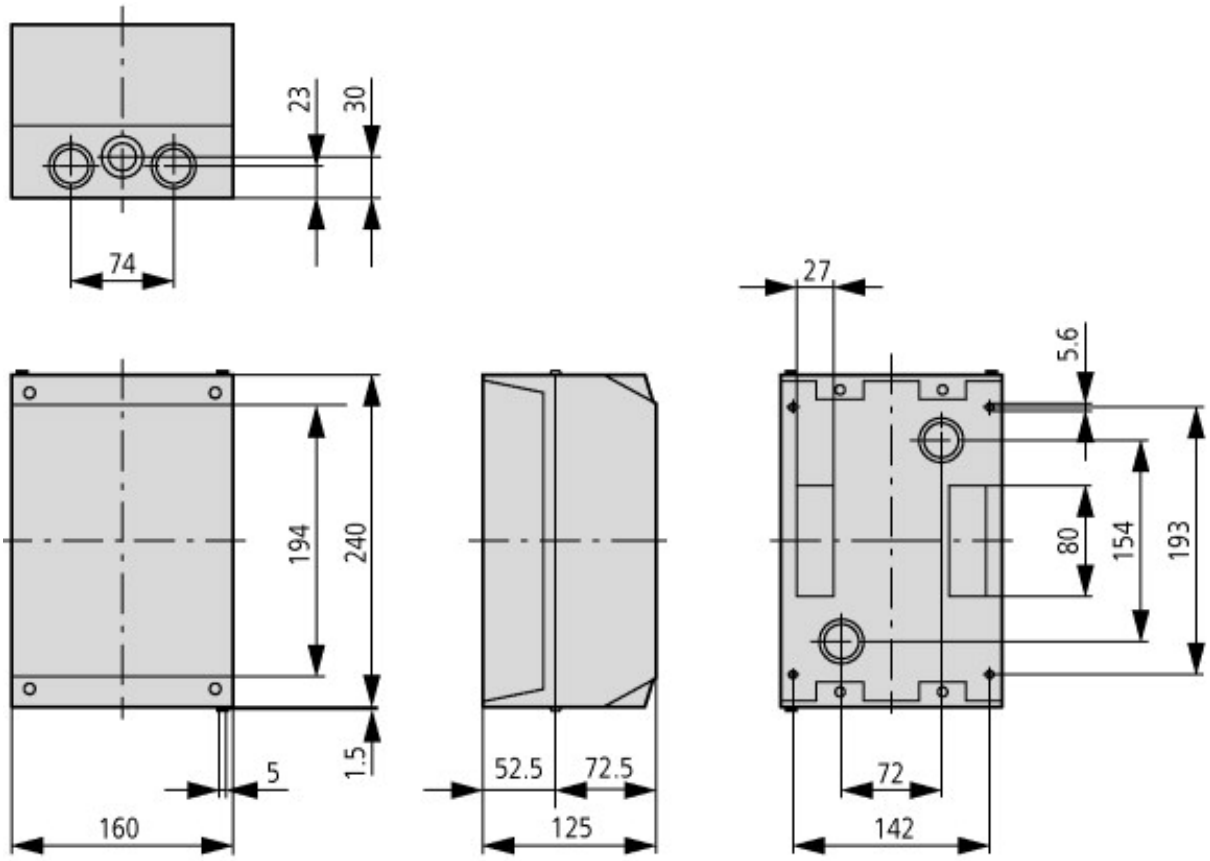



© 11/2015 by Eaton Industries GmbH