Circuit-breaker, 3p, 3200A, withdrawable part

Part no. IZM32N3-U32W
Article no. 123671

Powering Business Worldwide

Delivery programme

Product range			Air circuit-breakers/switch-disconnectors
Product range			Open circuit-breakers
Current Range			over 4000 A
Protective function			Universal protection
Installation type			Withdrawable
Construction size			IZM32
Release system			Electronic release
Standard/Approval			IEC
Number of poles			3 pole
Degree of Protection			IP20, IP55 with protective cover, IP41 with door sealing frame
Rated current = rated uninterrupted current	$I_n = I_u$	A	3200
Breaking capacity Icu = Ics to 440 V 50/60 Hz	I_{cu}	kA	85
Breaking capacity Ics to 440 V 50/60 Hz	I_{cs}	kA	85
Overload release, min.	I_r	A	1280
Overload release, max.	I_r	A	3200
Non-delayed	$I_i = I_n$ x …		2 - 10, OFF
Delayed	$I_{sd} = I_r$ x …		2 - 10

Notes

Including rear connection main terminals and secondary terminal blocks according to ordered breaker options.

Note concerning the product

Cassette needs to be ordered separately.

Technical data

General

Standards			IEC/EN 60947
Ambient temperature			
Storage	ϑ	°C	-25 - +70 (device with LCD-display -20 - +70)
Operating (open)		°C	-25 - +70 (device with LCD-display -20 - +70)
Mounting position			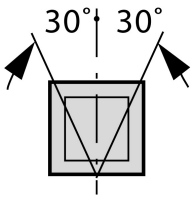
			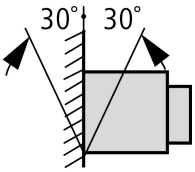
Utilization category			B
Degree of Protection			IP20, IP55 with protective cover, IP41 with door sealing frame
Direction of incoming supply			as required

Main conducting paths

Rated current = rated uninterrupted current	$I_n = I_u$	A	3200
Rated uninterrupted current at 50 °C	I_u	A	3100

Rated uninterrupted current at 60 °C	I_u	A	2800
Rated uninterrupted current at 70 °C	I_u	A	2550
Rated impulse withstand voltage	U_{imp}	V AC	8000
Rated operational voltage	U_e	V AC	690
Use in IT electrical power networks up to U = 440 V	I_{IT}	kA	39
Overvoltage category/pollution degree			III/3
Rated insulation voltage	U_i	V	1000

Switching capacity

Rated short-circuit making capacity	I_{cm}		
up to 440 V 50/60 Hz	I_{cm}	kA	178
up to 690 V 50/60 Hz	I_{cm}	kA	179
Rated short-time withstand current 50/60 Hz			
t = 1 s	I_{cw}	kA	85
t = 3 s	I_{cw}	kA	65
Rated short-circuit breaking capacity I_{cn}	I_{cn}		
IEC/EN 60947 operating sequence I_{cu} O-t-CO			
up to 240 V 50/60 Hz	I_{cu}	kA	85
up to 440 V 50/60 Hz	I_{cu}	kA	85
up to 690 V 50/60 Hz	I_{cu}	kA	85
IEC/EN 60947 operating sequence I_{cs} O-t-CO-t-CO			
up to 240 V 50/60 Hz	I_{cs}	kA	85
up to 440 V 50/60 Hz	I_{cs}	kA	85
up to 690 V 50/60 Hz	I_{cs}	kA	85
Operating times			
Closing delay via spring release		ms	30
Break times		ms	40
Total opening delay via shunt release		ms	35
Total opening delay via undervoltage release		ms	35/70
Total opening delay on non-delayed short-circuit release (up to complete arc quenching)		ms	35
Maximum operating frequency	Operations/h		60
Heat dissipation at rated current I_n			
Fixed mounting		W	320
Withdrawable units (switch with cassette)		W	800

Weight

Fixed mounting			
3-pole		kg	70
4-pole		kg	89
Withdrawable			
3-pole		kg	88
4-pole		kg	115
Cassette			
3 pole		kg	60
4 pole		kg	73

Terminal capacities

Copper bar			
Fixed mounting			
Black		mm	3 x 10 x 100
Withdrawable units			
Black		mm	3 x 10 x 100
			Permissible continuous current for circuit-breakers operating in switchboards at various internal ambient temperatures. The switchboard's internal ambient temperature should be estimated using the calculation methods of IEC regulation.
Other technical data (sheet catalogue)			Tripping characteristics for universal and selective protection Notes - tripping characteristics

Design verification as per IEC/EN 61439

Technical data for design verification		
Operating ambient temperature min.	°C	-25
Operating ambient temperature max.	°C	70

Dimensions

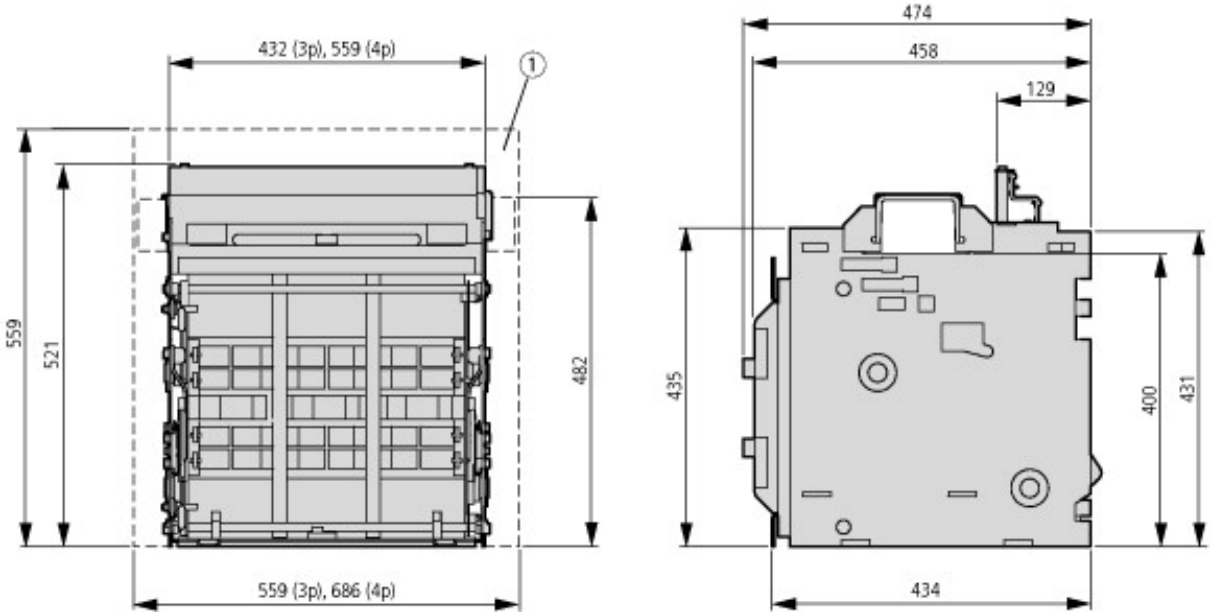

1 Recommended minimum enclosure size (not shown to scale)

Additional product information (links)

Notes - tripping characteristics	http://ecat.moeller.net/flip-cat/?edition=HPLEN&startpage=18.88
Tripping characteristics for universal and selective protection	http://ecat.moeller.net/flip-cat/?edition=HPLEN&startpage=18.79

© 11/2015 by Eaton Industries GmbH