Circuit-breaker, 4p, 800A, fixed

Part no. **IZM20N4-A08F**
Article no. **123550**

Powering Business Worldwide

Delivery programme

Product range			Air circuit-breakers/switch-disconnectors
Product range			Open circuit-breakers
Current Range			over 4000 A
Protective function			System protection
Installation type			Fixed
Construction size			IZM20
Release system			Electronic release
Standard/Approval			IEC
Number of poles			4 pole
Degree of Protection			IP20, IP55 with protective cover, IP41 with door sealing frame
Rated current = rated uninterrupted current	$I_n = I_u$	A	800
Breaking capacity Icu = Ics to 440 V 50/60 Hz	I_{cu}	kA	65
Breaking capacity Ics to 440 V 50/60 Hz	I_{cs}	kA	65
Overload release, min.	I_r	A	320
Overload release, max.	I_r	A	800
Non-delayed	$I_i = I_n$ x …		2 - 10

Notes

Including rear connection main terminals and secondary terminal blocks according to ordered breaker options.

Technical data

General

Standards			IEC/EN 60947
Ambient temperature			
Storage	ϑ	°C	-25 - +70 (device with LCD-display -20 - +70)
Operating (open)		°C	-25 - +70 (device with LCD-display -20 - +70)
Mounting position			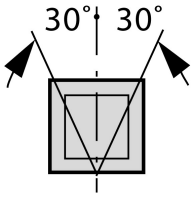
			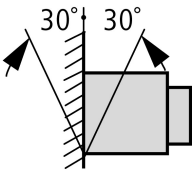
Utilization category			B
Degree of Protection			IP20, IP55 with protective cover, IP41 with door sealing frame
Direction of incoming supply			as required

Main conducting paths

Rated current = rated uninterrupted current	$I_n = I_u$	A	800
Rated uninterrupted current at 50 °C	I_u	A	800
Rated uninterrupted current at 60 °C	I_u	A	800
Rated uninterrupted current at 70 °C	I_u	A	800
Rated impulse withstand voltage	U_{imp}	V AC	8000
Rated operational voltage	U_e	V AC	690
Use in IT electrical power networks up to U = 440 V	I_{IT}	kA	21

Overvoltage category/pollution degree			III/3
Rated insulation voltage	U_i	V	1000

Switching capacity

Rated short-circuit making capacity	I_{cm}		
up to 440 V 50/60 Hz	I_{cm}	kA	136
up to 690 V 50/60 Hz	I_{cm}	kA	137
Rated short-time withstand current 50/60 Hz			
t = 1 s	I_{cw}	kA	65
t = 3 s	I_{cw}	kA	40
Rated short-circuit breaking capacity I_{cn}	I_{cn}		
IEC/EN 60947 operating sequence I_{cu} O-t-CO			
up to 240 V 50/60 Hz	I_{cu}	kA	65
up to 440 V 50/60 Hz	I_{cu}	kA	65
up to 690 V 50/60 Hz	I_{cu}	kA	65
IEC/EN 60947 operating sequence I_{cs} O-t-CO-t-CO			
up to 240 V 50/60 Hz	I_{cs}	kA	65
up to 440 V 50/60 Hz	I_{cs}	kA	65
up to 690 V 50/60 Hz	I_{cs}	kA	65
Operating times			
Closing delay via spring release		ms	30
Break times		ms	40
Total opening delay via shunt release		ms	35
Total opening delay via undervoltage release		ms	35/70
Total opening delay on non-delayed short-circuit release (up to complete arc quenching)		ms	35
Maximum operating frequency	Operations/h		60
Heat dissipation at rated current I_n			
Fixed mounting		W	45
Withdrawable units (switch with cassette)		W	90

Weight

Fixed mounting			
3-pole		kg	43
4-pole		kg	54
Withdrawable			
3-pole		kg	48
4-pole		kg	62
Cassette			
3 pole		kg	34
4 pole		kg	38

Terminal capacities

Copper bar			
Fixed mounting			
Black		mm	2 x 5 x 50
Withdrawable units			
Black		mm	2 x 5 x 50
			Permissible continuous current for circuit-breakers operating in switchboards at various internal ambient temperatures. The switchboard's internal ambient temperature should be estimated using the calculation methods of IEC regulation.
Other technical data (sheet catalogue)			Tripping characteristics for selective protection Notes - tripping characteristics

Design verification as per IEC/EN 61439

Technical data for design verification			
Operating ambient temperature min.		°C	-25
Operating ambient temperature max.		°C	70

Dimensions

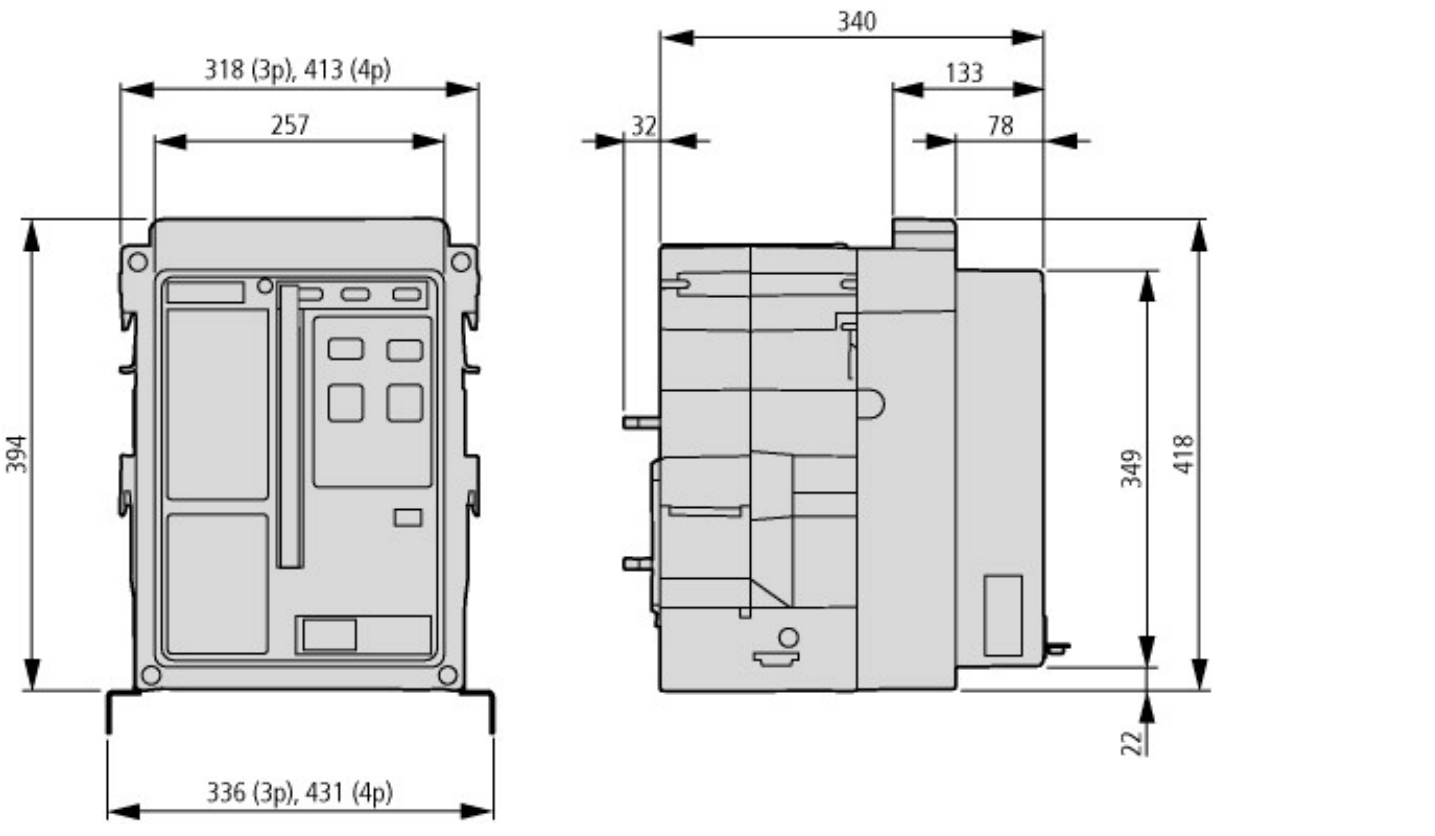

Additional product information (links)

Tripping characteristics for selective protection	http://ecat.moeller.net/flip-cat/?edition=HPLEN&startpage=18.78
Notes - tripping characteristics	http://ecat.moeller.net/flip-cat/?edition=HPLEN&startpage=18.88

© 11/2015 by Eaton Industries GmbH