Insulating surround, narrow, for toggle lever, size 2/3

Part no. NZM2/3-XBRS
Article no. 115275

Powering Business Worldwide

Similar to illustration

Delivery programme

Product range			Accessories
Accessories			Insulating surrounds
Standard/Approval			UL/CSA, IEC
Construction size			NZM2/3
Protection class			IP40
For use with			NZM2(-4), NZM3(-4) PN2(-4), N(S)2(-4) PN3(-4), N(S)3(-4)

Notes

For rectangular cutouts on doors and enclosures with a material thickness of 1 - 3 mm.

Clip-in external warning plate/marking plate.

Switches with slim insulating surrounds can be placed in a row next to each other. The required minimum clearance must be observed when doing so.

Design verification as per IEC/EN 61439

IEC/EN 61439 design verification			
10.2 Strength of materials and parts			
10.2.2 Corrosion resistance			Meets the product standard's requirements.
10.2.3.1 Verification of thermal stability of enclosures			Meets the product standard's requirements.
10.2.3.2 Verification of resistance of insulating materials to normal heat			Meets the product standard's requirements.
10.2.3.3 Verification of resistance of insulating materials to abnormal heat and fire due to internal electric effects			Meets the product standard's requirements.
10.2.4 Resistance to ultra-violet (UV) radiation			Meets the product standard's requirements.
10.2.5 Lifting			Does not apply, since the entire switchgear needs to be evaluated.
10.2.6 Mechanical impact			Does not apply, since the entire switchgear needs to be evaluated.
10.2.7 Inscriptions			Meets the product standard's requirements.
10.3 Degree of protection of ASSEMBLIES			Does not apply, since the entire switchgear needs to be evaluated.
10.4 Clearances and creepage distances			Meets the product standard's requirements.
10.5 Protection against electric shock			Does not apply, since the entire switchgear needs to be evaluated.
10.6 Incorporation of switching devices and components			Does not apply, since the entire switchgear needs to be evaluated.
10.7 Internal electrical circuits and connections			Is the panel builder's responsibility.
10.8 Connections for external conductors			Is the panel builder's responsibility.
10.9 Insulation properties			
10.9.2 Power-frequency electric strength			Is the panel builder's responsibility.
10.9.3 Impulse withstand voltage			Is the panel builder's responsibility.
10.9.4 Testing of enclosures made of insulating material			Is the panel builder's responsibility.
10.10 Temperature rise			The panel builder is responsible for the temperature rise calculation. Eaton will provide heat dissipation data for the devices.
10.11 Short-circuit rating			Is the panel builder's responsibility. The specifications for the switchgear must be observed.
10.12 Electromagnetic compatibility			Is the panel builder's responsibility. The specifications for the switchgear must be observed.
10.13 Mechanical function			The device meets the requirements, provided the information in the instruction leaflet (IL) is observed.

Technical data ETIM 6.0

Low-voltage industrial components (EG000017) / Empty enclosure for switchgear (EC000712)

Electric engineering, automation, process control engineering / Low-voltage switch technology / Component for low-voltage switching technology / Empty housing for switch devices (ecl@ss8.1-27-37-13-01 [AKN343011])

Material housing			Plastic
Width		mm	155

Height		mm	95
Depth		mm	16.5
With transparent cover			No
Suitable for emergency stop			No
Model			Built-in
Degree of protection (IP)			IP40

Approvals

Product Standards			UL489; CSA-C22.2 No. 5-09; IEC60947, CE marking
UL File No.			E140305
UL Category Control No.			DIHS
CSA File No.			022086
CSA Class No.			1437-01
North America Certification			UL listed, CSA certified

Dimensions

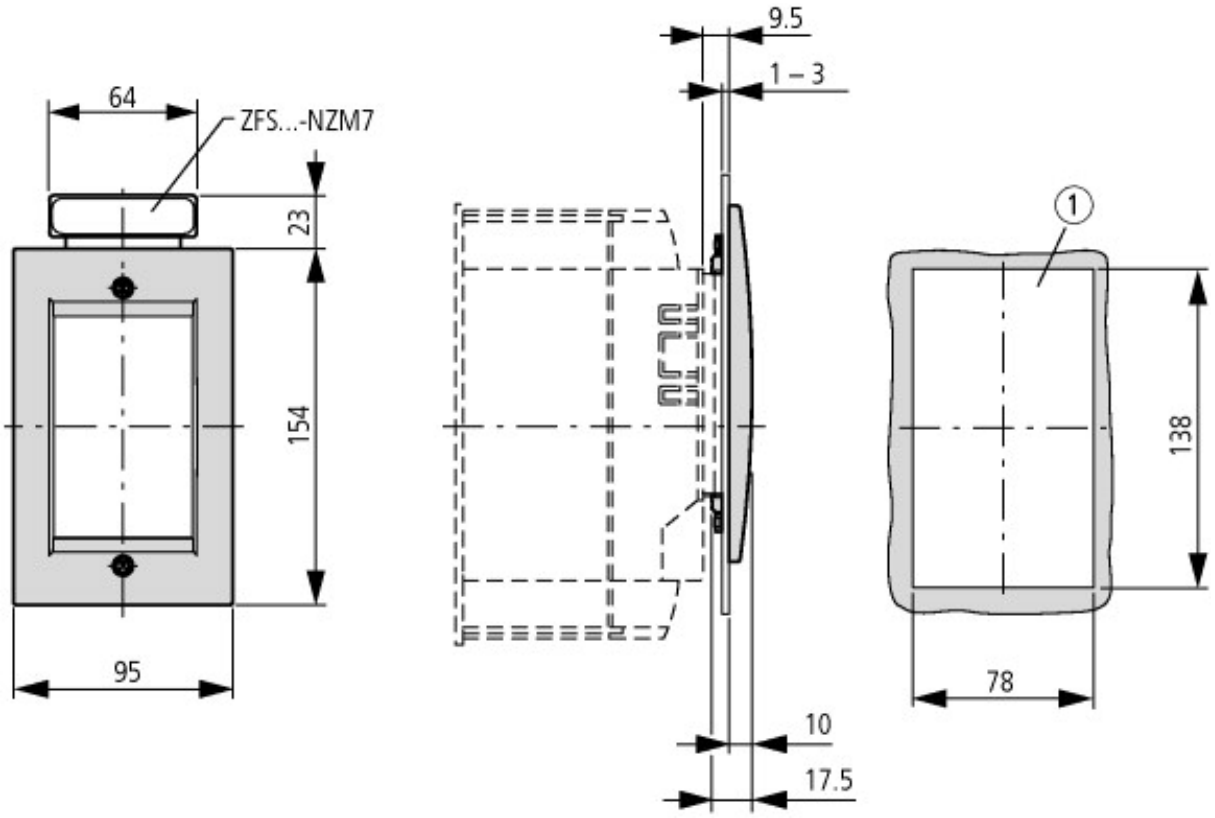

(1) Mounting aperture

© 12/2015 by Eaton Industries GmbH