At the end of this document you will find links to products related to this catalog. You can go directly to our shop by clicking HERE. HERE

Data sheet

Pressure switch and Thermostat Types KP and KPI

The KP and KPI pressure switches and thermostats are used for control, monitoring and alarm systems in a wide variety of industry applications.

KP pressure switches are mainly used for gaseous fluid whereas KPI pressure switches are more for liquid and gaseous fluid.

The KP pressure range include special designed pressure switches and limiters for steam boilers and other heating applications.

For water pump control and protection (dry run) the dual pressure switch KP44 is suitable and secure improved life time of the water pump.

Features

- Wide setting range,
- Shock and impact resistant,
- Snap action electrical contacts minimize chatter, bounce, and wear, and ensure long term electrical and mechanical reliability,
- Small dimensions. Space saving – easy to install in panels,
- Electrical connection from front of the unit makes rack mounting easier and also saves space,
- Suitable for alternating current and direct current,
- Single pressure switches and thermostats are fitted with a single pole double throw contact system (SPDT),
- Can be used for both liquids and gases (KPI),
- Manual trip function enables electrical connections verification without any tools or pressure changes in the application,
- Versions with automatic and manual reset available.

Approvals

CE-marked in accordance with LVD 2006/95/EC:
EN 60947-1, EN 60947-4-1, EN 60947-5-1
Underwriters Laboratories Inc., UL

China Compulsory Certificate, CCC
(excluding boiler versions)
GOST (excluding KPI)

SINGLE PRESSURE SWITCH

Technical data

Description		KP 35, KP 36	KPI 35, KPI 36	KPI 38	KP 34, KP 35, KP 36, KP 37 boiler version
Ambient temperature [°C]		-40 – 65 °C (for max. 2 hours up to 80 °C)			
Media temperature [°C]		-40 – 100 °C			
Fluid		Gaseous media	Gaseous media and liquids		Steam, air, gaseous media & liquids
Parts in contact with fluid	**Bellows**	Phosphor bronze or Stainless steel	Phosphor bronze		Stainless steel
	Pressure connector	Free-cutting steel (nickel plated) or Stainless steel	Brass	Free-cutting steel (nickel plated)	
Contact system		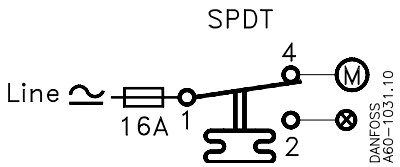 Single-pole double throw (SPDT)			
Contact load, Silver		*Alternting current:* AC-1: 16 A, 400 V AC-3: 16 A, 400 V AC-15: 10 A, 400 V *Direct current:* DC-13: 12 W, 220 V	*Alternting current:* AC-1: 10 A, 440 V AC-3: 6 A, 440 V AC-15: 4 A, 440 V *Direct current:* DC-13: 12 W, 220 V		*Alternting current:* AC-1 : 16 A, 400 V AC-3 : 16 A, 400 V AC-15 : 10 A, 400 V *Direct current:* DC-13: 12 W, 220 V
Contact load, Gold plated contact set		See information page 15.			
Enclosure, IP30 grade		Unit must be mounted on a flat surface/ a flat fitting and all unused holes covered.			
Enclosure, IP44 grade		Mounted as IP30 plus fitting of top cover, code no. **060-109766.**			
Enclosure, IP55 grade		Unit mounted in a special IP55 enclosure, code no. **060-033066** or **060-062866.**			
Cable entry		Rubber cable gland entry for 6 – 14 mm diameter cables.			
Mounted on back plate/wall bracket		Vibration proof in the range 0 – 1000 Hz, 4 g (1 g = 9.81 m/s^2).			
Mounted on angle bracket		Not recommended in areas where vibrations occur.			

Ordering

Pressure switch, types KP 35 and KP 36

Type	Setting range p_e [bar]	Differential [bar]	Permissible operating pressure p_e [bar]	Max. test pressure [bar]	Pressure connection	Contact material	Code no.
KP 35	-0.2 – 7.5	0.7 – 4.0	17	22	G 1/4 A	silver	**060-113366** **060-113391**[1]
	-0.2 – 7.5	0.7 – 4.0	17	22	G 1/4 A	gold-plated	**060-504766**
	-0.2 – 7.5	0.7 – 4.0	17	22	G 1/4 A	silver	**060-538666**[2]
	-0.2 – 7.5	0.7 – 4.0	17	22	G 1/4 A	silver	**060-450366**[3]
KP 36	2.0– 14.0	0.7 – 4.0	17	22	G 1/4 A	silver	**060-110866** **060-110891**[1]
	2.0– 14.0	0.7 – 4.0	17	22	G 1/4 A	gold	**060-113766**
	2.0– 14.0	0.7 – 4.0	17	22	G 1/4 A	silver	**060-538766**[2]
	4.0 – 12.0	0.5 – 1.6	17	22	G 1/4 A	silver	**060-122166**
	4.0 – 12.0	0.5 – 1.6	17	22	G 1/4 A	gold	**060-114466**
	4.0 – 12.0	0.5 – 1.6	17	22	G 1/4 A	silver	**060-450166**[3]

[1] Available only in Asia market
[2] IP55 transparent enclosure
[3] Stainless steel version, IP55 non-transparent enclosure

Pressure switch, types KPI 35 – KPI 38

Type	Setting range p_e [bar]	Differential [bar]	Permissible operating pressure p_e [bar]	Max. test pressure [bar]	Pressure connection	Contact material	Code no.
KPI 35	-0.2 – 8.0	0.4 – 1.5	18	18	G 1/4 A	silver	**060-121766**
	-0.2 – 8.0	0.4 – 1.5	18	18	G 1/4 A	gold-plated	**060-316466**
	-0.2 – 8.0	0.5 – 2.0	18	18	G 1/4 A	silver	**060-121966**
	-0.2 – 8.0	0.4 – 1.5	18	18	G 1/4 A	silver	**060-315766**[1]
KPI 36	4 .0– 12.0	0.5 – 1.6	18	18	G 1/4 A	silver	**060-118966**
	4.0 – 12.0	0.5 – 1.6	18	18	G 1/4 A	gold-plated	**060-113866**
	2.0 – 12.0	0.5 – 1.6	18	18	G 1/4 A	silver	**060-316966**
	2.0 – 12.0	0.5 – 1.6	18	18	G 1/4 A	silver	**060-319366**[2]
KPI 38	8.0 – 28.0	1.8 – 6.0	30	30	G 1/4 A	silver	**060-508166**
	8.0 – 28.0	1.8 – 6.0	30	30	G 1/4 A	silver	**060-541866**[2]

[1] IP55 transparent enclosure
[2] IP55 non-transparent enclosure

Ordering
(continued)

Pressure switch, types KP 34 – KP 37, boiler version

Type	Setting range p_e [bar]	Differential [bar]	Reset	Pressure connection [bar]	Max. test pressure [bar]	Contact material	Code no.
KP 34	0.1 – 1.0	0.1 – 0.4	Automatic	G ½ A	4.0	silver	**060-216466**
	0.1 – 1.0	0.2	Manual	G ½ A	4.0	silver	**060-216366**
KP 35	0.4 – 3.4	0.4 – 2.2	Automatic	G ½ A	10	silver	**060-216666**
	0.4 – 3.4	0.5	Manual	G ½ A	10	silver	**060-216566**
KP 36	1.0 – 10.0	0.7 – 4.0	Automatic	G ½ A	17	silver	**060-215966**
	1.0 – 10.0	0.7	Manual	G ½ A	17	silver	**060-216066**
KP 37	4.0 – 20.0	1.8 – 3.1	Automatic	G ½ A	28	silver	**060-216166**
	4.0 – 20.0	3.0	Manual	G ½ A	28	silver	**060-216266**

Contact system and application

Switch type – single pole double throw	Switch action	Application
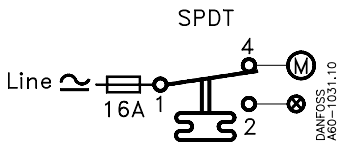 SPDT	1. Terminal 1 – 4 close high and open low Terminal 1 – 2 can be used as low pressure alarm	1. Low pressure cut-out
	2. Terminal 1 – 2 open high and close low Terminal 1 – 4 can be used as high pressure alarm	2. High pressure cut-out

Setting

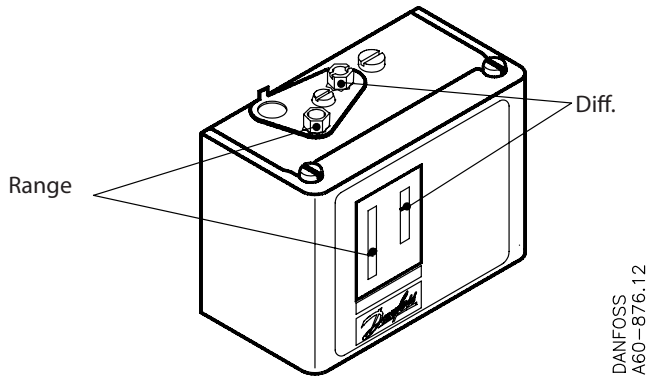

Cut-in and cut-out pressures of the system should always be checked with an accurate pressure gauge.

Pressure setting for switches with automatic reset.
1. Set the cut-in pressure on the "CUT-IN" scale (range scale),
2. Set the differential on the "DIFF" scale.

The cut-out pressure must be above absolute vacuum (pe = -1 bar.).
For high pressure switches the restart pressure is equal to cut-out pressure minus differential.

Pressure switches with manual reset
Set the cut-out presure on the "CUT-OUT" scale (range scale).
Low pressure limiters can be manually reset when the pressure is equal to the cut-out pressure plus the differential. High pressure limiters can be manually reset when the pressure is equal to the stop pressure minus the differential.

Note:
For low pressure switches the restart pressure is equal to cut-out pressure plus differential value.

Design / Function

Key sketch of KP pressure switch

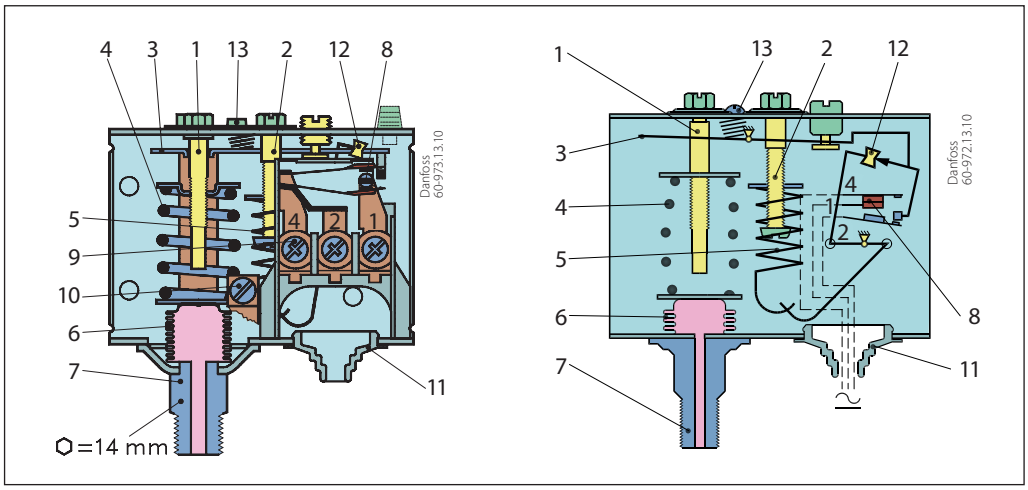

Key sketch of KPI pressure switch

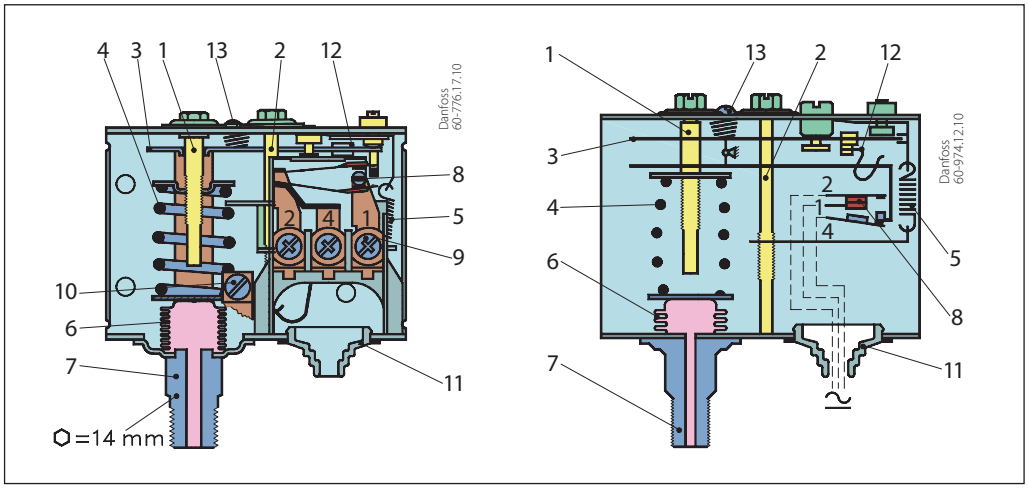

Key sketch of KP pressure switch, boiler version

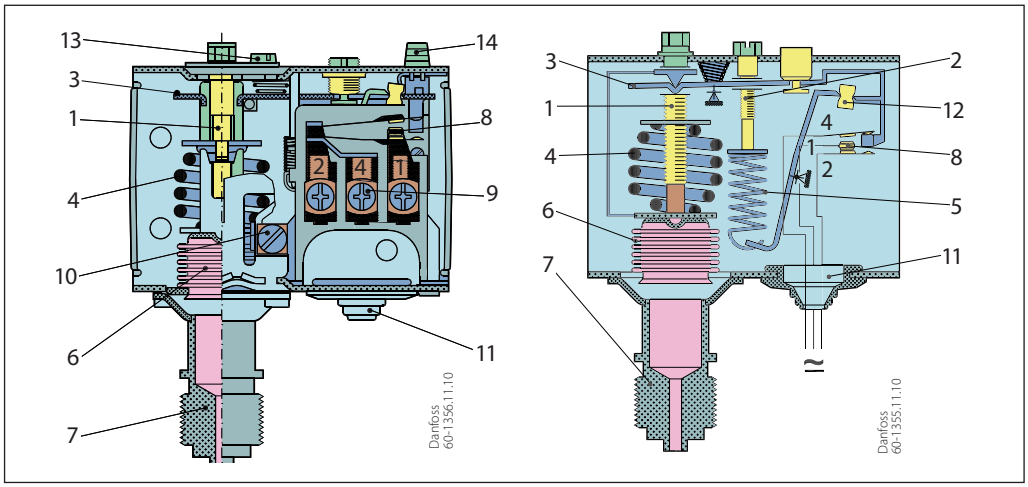

1. Setting spindle
2. Differential setting spindle
3. Main arm
4. Main spring
5. Differential spring
6. Bellows
7. Pressure connector
8. Contact system
9. Connection terminals
10. Earth terminal
11. Cable entry
12. Omega spring (KPI)
12. Tumbler (KP)
13. Locking screw
14. Manual reset

The contact system in KP pressure switches has a snap function. This means that the bellows is active only when the cut-in or cut out value is reached.
The bellows is connected to the pressure of the controlled plant via the connector (7)

Danfoss KPI pressure switches are designed so that the bellows moves in the same proportion as the pressure switches change. To ensure a snap function on contact change over, an omega spring is located between bellows and contact system.

Dimensions [mm] and weights [kg]

Pressure switch, types KP 35, KP 36, KPI 35, KPI 36 and KPI 38:

Standard IP30 housing

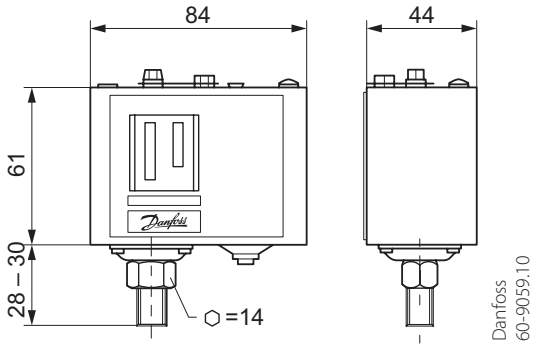

Net weight approx. 0.3 kg

IP 55 enclosure

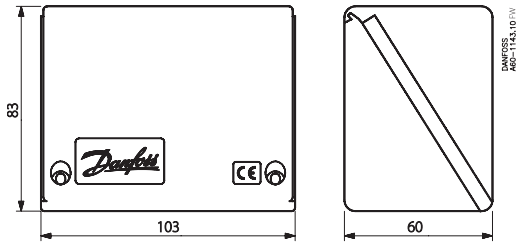

Wall bracket

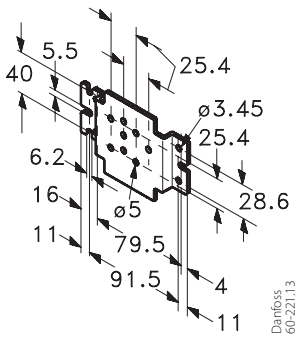

Angle bracket

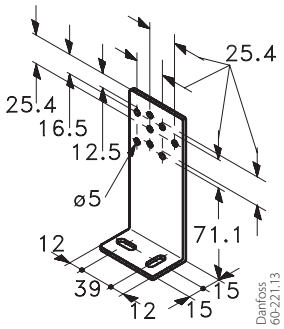

Dimensions [mm] and weights [kg]
(Boiler version)

Pressure switch, types KP 35 and KP 36

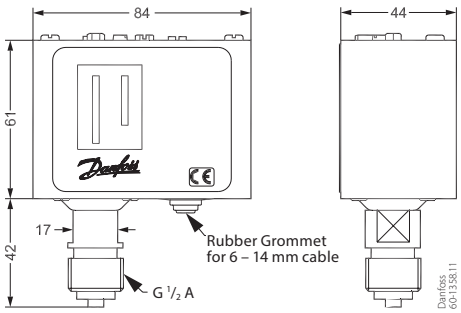

Net weight approx. 0.34 kg

Pressure switch, type KP 34

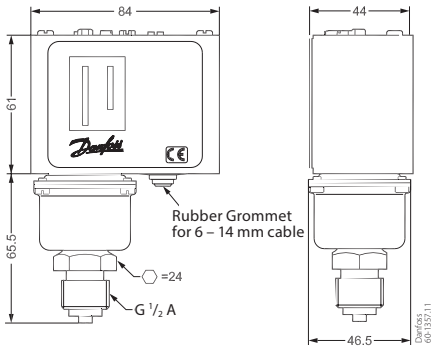

Net weight approx. 0.43 kg

Accessories for KP pressure switches

Part	Symbol	Description	Total	Code no.
Brackets with mounting screws and washers	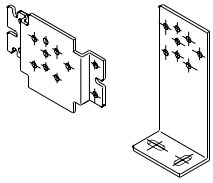	Wall bracket for KP	1	**060-105566**
		Angle bracket for KP	1	**060-105666**
Screwed cable entry		PG 13.5 with special nut For 6 –14 mm diameter cables	1	**060-105966**
Sealing screw		For sealing the setting on KP	2	**060-105766**
Top cover	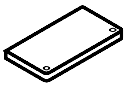	If a bracket is mounted on the backplate of the housing, the KP thermostats will have an IP44 grade of enclosure. The cover protects the setting spindles.	1	**060-109766**
Protective cap	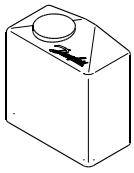	Protective cap for KP thermostats. To protect the unit against rain and humidity. Grade of enclosure: IP44 Material: Polyethylene Max. ambient temperature: 65 °C Min. ambient temperature: -40 °C	1	**060-003166**
IP55 enclosure	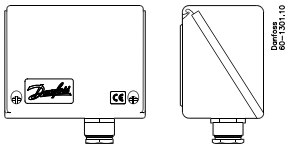	If the unit risk being exposed to heavy water influence a better grade of enclosure can be achieved when mounting product in a special IP55 enclosure.	1	**060-033066**
IP55 transparent enclosure	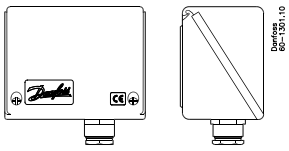	If the unit risk being exposed to heavy water influence a better grade of enclosure can be achieved when mounting product in a special IP55 enclosure.	1	**060-062866**

DUAL PRESSURE SWITCH

Technical data

Ambient temperature [°C]	-40 – 65 °C (for max. 2 hours up to 80 °C)	
Media temperature [°C]	Max. 100 °C	
Fluid	Fresh water	
Parts in contact with fluid	Bellows	Phosphor bronze, CuSn6
	Pressure connector	Free-cutting steel (nickel plated)
Contact system	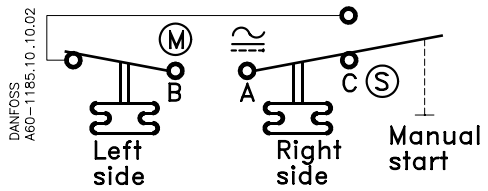	
Contact load, Silver	*Alternting current:* AC-1: 16 A, 400 V AC-3: 16 A, 400 V AC-15: 10 A, 400 V *Direct current:* DC-13: 12 W, 220 V	
IP level	IP22	
Cable entry	Rubber cable gland entry for 6 – 14 mm diameter cables	
Mounted on backplate or wall bracket	Vibration-proof in the range 0 – 1000 Hz, 4g (1g = 9.81m/s²)	
Mounting on angle bracket	Not recommended for areas where vibration occurs	

Ordering

Pressure switch, type KP 44

Pressure range		Differential		Permissible operating pressure p_e	Max. test pressure	Pressure connection	Contact material	Code no.
Control [bar]	Safety [bar]	Control [bar]	Safety [bar]	[bar]	[bar]			
2.0 – 12.0	0.5 – 6.0	0.7 – 4.0	1.0	Left side: 17 Right side: 17	Left side: 25 Right side: 19	2 × G ¼ A	silver	**060-001366**

Design / Function

1. Lefthand pressure setting spindle
2. Differential setting spindle
3. Main arm
4. Righthand pressure setting spindle
5. Main spring
6. Differential spring
7. Bellows
8. Pressure connections
9. Contact system
10. Terminal
11. Earth terminal
12. Cable entry
13. Tumbler
14. Locking plate
15. Impulse lever

Key contact system of KP 44 pressure switch

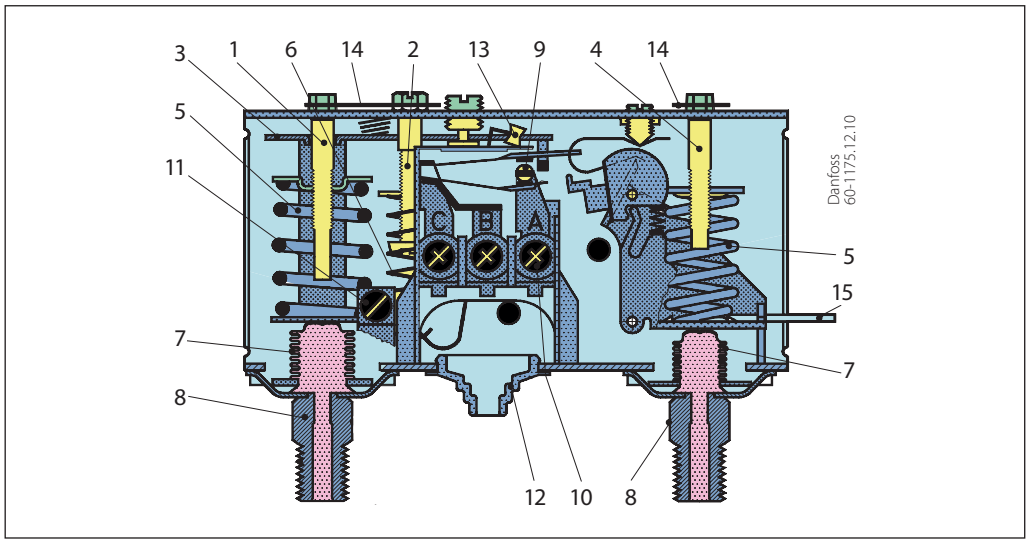

Water supply from reservoir or well
The contact system in the KP 44 has a snap-action function and allows the bellows moves only when the cut-in or cut-out value is reached. If water is running short in the well or reservoir, the pump will no longer be able to increase the pressure to the cut-out value. Consequently the pump will keep running - perhaps without water. However, the KP 44 pressure switch will stop the pump as soon as the righthand bellows pressure drops below the safety cut-out setting.
The pump can be started again by lifting the impulse lever. The pump will continue to operate when the impulse lever is released, provided that the righthand bellows pressure is higher than the safety cut-out setting plus a fixed differential of 1 bar. If this is not the case, the pump will cut-out again indicating insufficient water supply.

Pressurized water supply direct to pump
When water supply fails on the inlet side, the pump will no longer be able to boost the pressure to the cut-out value. Consequently the pump will keep running - perhaps without water. However, the KP 44 pressure switch will stop the pump as soon as the pressure in the pump suction line drops below the safety cut-out setting. The pump will automatically start again when the pump suction pressure has reached the level of 1 bar above the safety cut-out setting.
Automatic start-up will only take place if the righthand bellows is connected to the pump suction line. Air pockets should be avoided to prevent the pump from starting up on air pressure rise, without the presence of water.

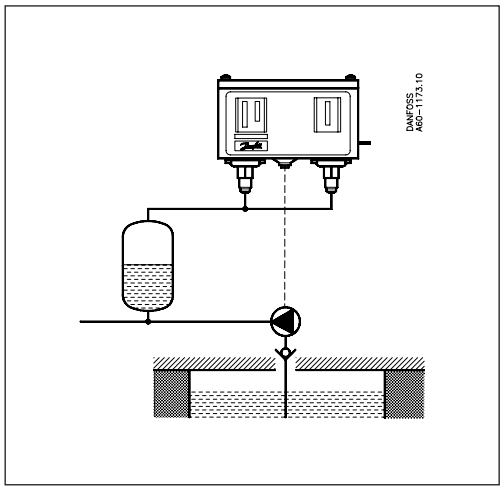

In a hydrophore system where water is pumped from a well or an open tank, both bellows are connected to a pressure outlet on the air side in the pump pressure line, if possible.

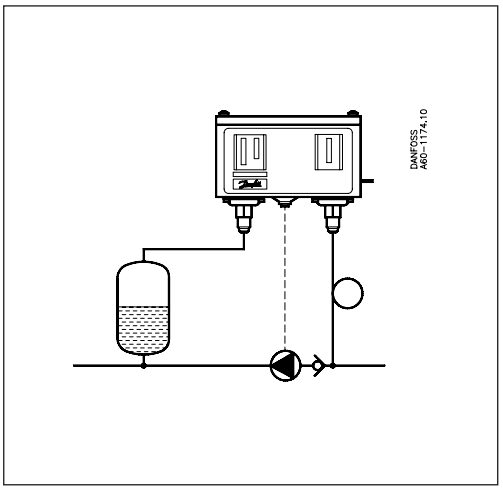

In a booster system receiving pressurized water the righthand bellows is connected
- to the low pressure side of the pump forautomatic start-up.
- to the high pressure side of the pump for manual start-up.

The lefthand bellows is always connected to the high pressure side of the pump.

Setting

Safety cut-out setting
The righthand bellows will automatically cut-out the pump at the safety cut-out setpoint. Automatic start-up, if any, will take place when the pressure has reached the level of 1 bar above the setpoint. Manual cut-in is made by lifting the impulse lever and releasing it again when the pressure has increased by min. 1 bar.

The safety cut-out setpoint is normally determined by the static pressure (the water column). However, in order to avoid disturbing signal interaction, care should be taken to ensure that the safety cut-out setting is at least 1.5 bar lower than the control pressure cut-in setting. See table with pressure setting examples below.

Required tap water pressure	≥2.3 bar	≥4.0 bar	≥5.0 bar	≥8.0 bar
Control pressure cut-out setting	3.0 bar	5.0 bar	8.0 bar	12 bar
Differential	0.7 bar	1.0 bar	3.0 bar	4.0 bar
Control pressure cut-in setting	2.3 bar	4.0 bar	5.0 bar	8.0 bar
Max. safety cut-out setting	0.8 bar	2.5 bar	3.5 bar	6.0[1] bar

[1] 6.0 bar is the normal max. setpoint

Control pressure settings
Control pressure cut-out setpoint is set on the lefthand pressure setting scale.

The differential is set between 0.7 and 4 bar. The control pressure cut-in setting will be the cut-out control pressure less the differential.

Dimensions[mm] and weights [kg]

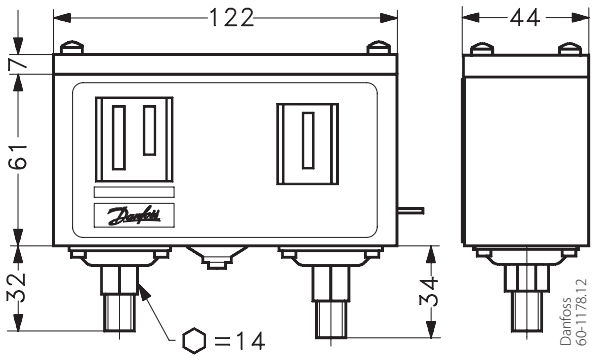

Net weight approx. 0.5 kg

Accessories for KP 44 pressure switches

Part	Symbol	Description	Total	Code no.
Brackets with mounting screws and washers	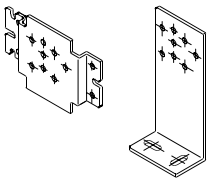	Wall bracket	1	**060-105566**
		Angle bracket	1	**060-105666**
Screwed cable entry		Screwed cable entry Pg 13.5 with special nutfor 6 – 14 mm cables	1	**060-105966**
Sealing screw		For sealing the setting on KP	2	**060-105766**

SINGLE THERMOSTAT

Technical data

Ambient temperature [°C]	-40 – 65 °C (for max. 2 hours up to 80 °C)
Sensor material	Tinned copper Cu/Sn5
Contact system	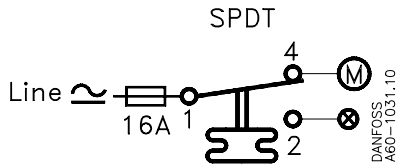 Single-pole double throw (SPDT)
Contact load, Silver	*Alternting current:* AC-1: 16 A, 400 V AC-3: 16 A, 400 V AC-15: 10 A, 400 V *Direct current:* DC-13: 12 W, 220 V
Contact load, Gold plated contact set	See Information page 15.
Enclosure, IP30 grade	Unit must be mounted on a flat surface / a flat fitting and all unused holes covered.
Enclosure, IP44 grade	Mounted as IP30 plus fitting of top cover, code no. **060-109766.**
Enclosure, IP55 grade	Unit mounted in a special IP55 enclosure, code no. **060-033066** or **060-062866**. Exception: KP 75.
Cable entry	Entry for 6 – 14 mm diameter cable.
Mounted on backplate or wall bracket	Vibration-proof in the range 0 – 1000 Hz, 4 g (1 g = 9.81 m/s^2).
Mounted on angle bracket	Not recommended for areas where vibration occurs.

Ordering

Thermostat, types KP 75 – KP 81

Type	Setting range [°C]	Differential [°C]	Max. sensor temperature [°C]	Capillary tube length [m]	Contact material	Code no.
KP 75	0 – 40	3 – 10	80	Room sensor	silver	**060L121266**
	0 – 40	3 – 10	80	Room sensor	gold-plated	**060L117166**
KP 78	30 – 90	5 – 15	150	2	silver	**060L118466**
KP 79	50 – 100	5 – 15	150	2	silver	**060L112666**
KP 81	80 – 150	7 – 20	200	2	silver	**060L112566**
KP 81	80 – 150	7 – 20	200	3	silver	**060L118366**
KP 81	80 – 150	7 – 20	200	5	silver	**060L117066**
KP 81 (max. reset)	80 – 150	8 (max. reset)	200	2	silver	**060L115566**

Design / Function

Key sketch of KP thermostat, types KP 78, KP 79, KP 81

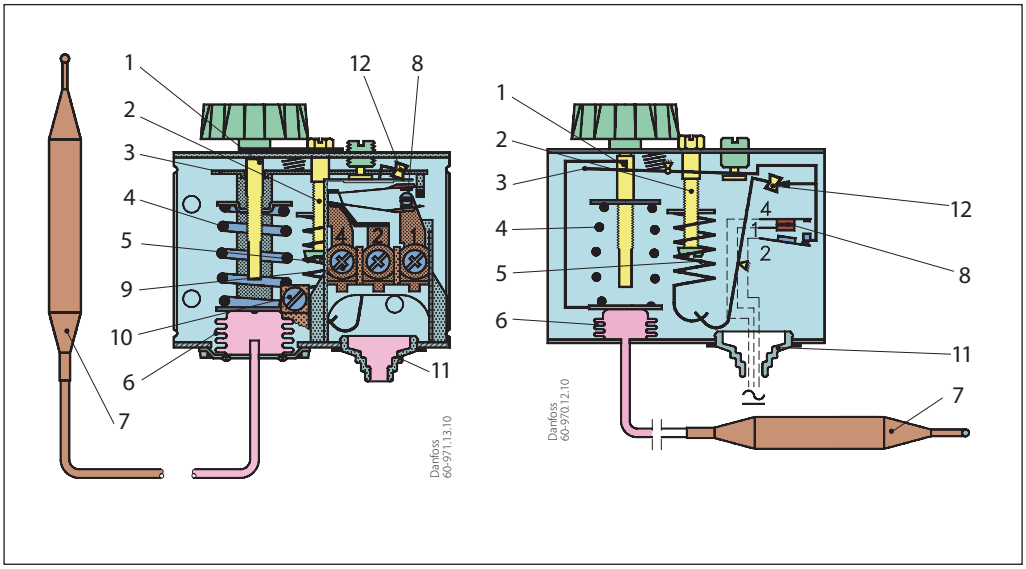

1. Temperature setting spindle
2. Differential setting spindle
3. Main arm
4. Main spring
5. Differential spring
6. Bellows
7. Sensor
8. Contact system
9. Connection terminals
10. Earth terminal
11. Cable entry
12. Tumbler

KP 75 room sensor

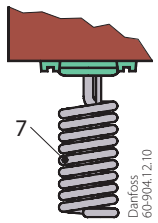

The contact system in KP thermostats has a snap function. This means that the bellows is active only when the cut-in or cut-out value is reached.

Charges

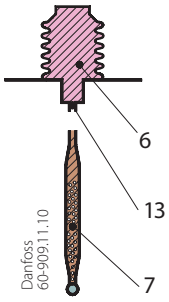

6. Bellows
7. Sensor
13. Capillary tube

Absorption charge
The charge consists partly of a superheated gas and partly of a solid substance with a large absorption surface.
The solid substance is concentrated in the sensor (7), and consequently it is always the sensor that comprises the temperature-regulating part of the thermostatic element.
The sensor can be placed both warmer or colder than the thermostat housing and capillary tube. However, placing it in an ambient temperature higher or lower than 20 °C can affect the accuracy of the scale.

Setting

Thermostats with automatic reset
Set the upper limit temperature on the range scale. Then set the differential on the DIFF scale. The temperature set on the range scale is also the temperature at which contact changeover re-occurs on rising temperature.
The contacts changeover when the temperature has fallen to a value lower than that set on the DIFF scale.
If at lower settings the plant will not start/stop, the reason might be that the differential has been set too high.

Thermostats with minimum reset
Set the temperature on the range scale.
The differential setting is fixed.
Min. reset units will restart after the temperature at the thermostat sensor has risen by a value greater than that of the fixed differential.

Thermostats with maximum reset
Set the stop temperature on the range scale.
The differential setting is fixed.
Max. reset units will restart after the temperature at the thermostat sensor has fallen by a value greater than that of the fixed differential

Dimensions [mm] and weights [kg]

Thermostat, types KP 75, KP 78, KP 79, KP 81

Net weight approx. 0.4 kg

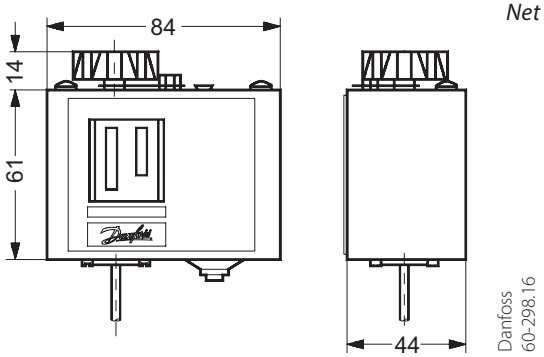

IP 55 enclosure

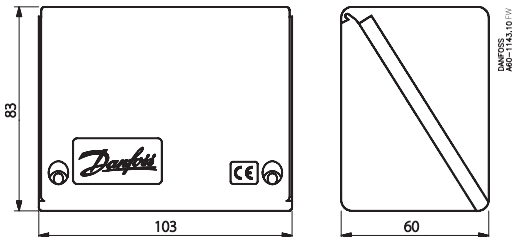

KP 75 Sensor: Tinned copper Cu/Sn 5

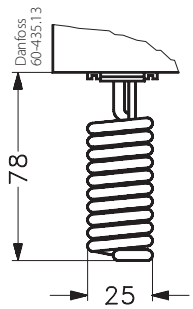

KP 78, 79, 81 Sensor: Tinned copper Cu/Sn 5

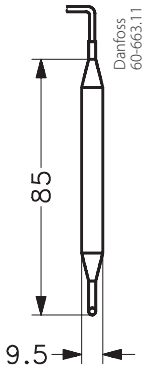

Wall bracket

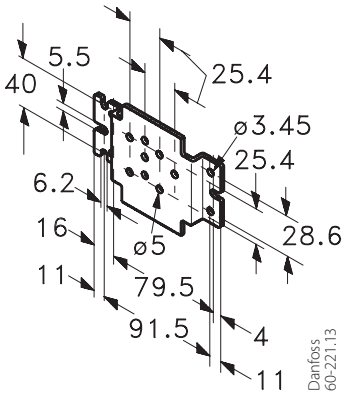

Angle bracket

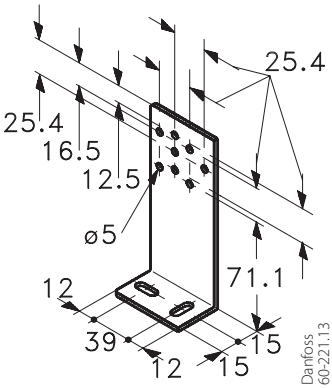

Accessories for KP thermostats

Part	Symbol	Description	Total	Code no.
Brackets with mounting screws and washers	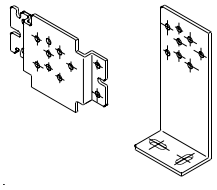	Wall bracket for KP	1	**060-105566**
		Angle bracket for KP	1	**060-105666**
Sensor holder	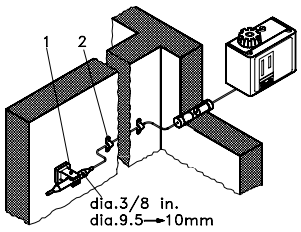	Sensor holder for wall mounting with four capillary tube clips and 9-off 12 mm pins	1	**017-420166**
Screwed cable entry		PG 13.5 with special nut For 6 – 14 mm diameter cables A standard Pg 16 cable entry can be used for 8 –16 mm diameter cables	1	**060-105966**
Sealing screw		For sealing the setting on KP	2	**060-105766**
Top cover	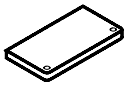	If a bracket is mounted on the backplate of the housing, the KP thermostats will have an IP44 grade of enclosure. The cover protects the setting spindles.	1	**060-109766**
Protective cap	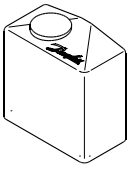	Protective cap for KP thermostats. To protect the unit against rain and humidity. Grade of enclosure: IP44 Material: Polyethylene Max. ambient temperature: 65 °C Min. ambient temperature: -40 °C	1	**060-003166**
Sensor pocket		For all KP thermostats with cylindrical remote sensor. Sensor pocket, gasket and union for screwing into G½ connectors welded onto tubes, containers, etc.		
	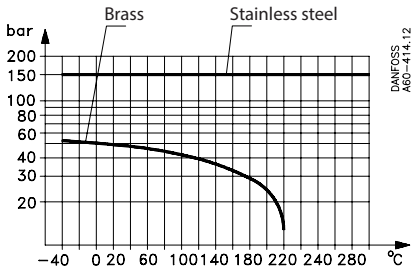 Permissible pressure of sensor pipe medium	Int. diameter 9.6 mm, insert depth 112 mm (brass). Ext. diameter 11 mm	1	**017-437066**
		Int. diameter 9.6 mm, insert depth 112 mm (st 18/8). Ext. diameter 11 mm	1	**017-436966**
		Int. diameter 9.6 mm, insert depth 465 mm (brass). Ext. diameter 11 mm	1	**017-421666**
		Media temperature for sensor: 250 °C This temperature can be increased by applying a different gasket material		
Heat-conductive aluminium paste	Tube 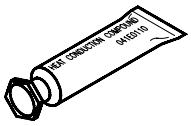	For KP and RT thermostats with sensor mounted in a sensor pocket. Temperature range: -20 – 150 °C (short-lived 220 °C) Tube with 5 g aluminium paste	1	**041E0114**

General information
Gold contacts

Contact material	**Gold-plated silver**
Contact system	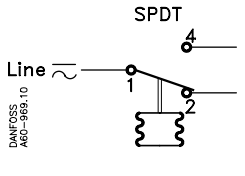 Single-pole double throw (SPDT)
Contact load (when Au surface is burnt away)	*Alternating current:* Ohmic load: AC-1: 10 A, 440 V Inductive load: AC-3: 6 A, 440 V AC-15: 4 A, 440 V *Direct current:* DC-13: 12 W, 220 V

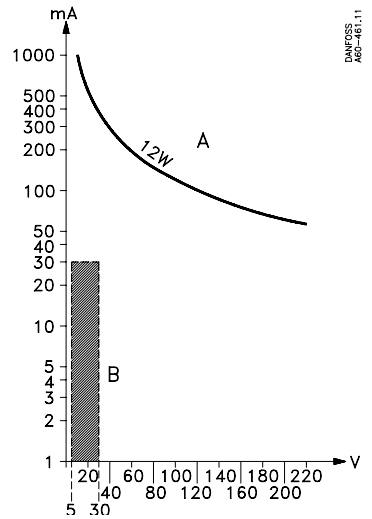

Curve A gives the maximum load.
Hatched area B: Acceptable load
for the gold plating of the contact. DC 13

Terminology

Range setting/ Set point
The pressure range within which the unit will give a signal (contact changeover).

Differential
The difference between contact changeover on rising and falling pressure.
The differential is a condition for stable automatic plant operation.

Manual reset
A unit with manual reset can only be restored to operational mode by activation of the external reset button.
Min. reset units will restart after the pressure has risen by a value greater than that of the fixed differential.
Max. reset units will restart after the pressure has fallen by a value greater than that of the fixed differential.

Automatic reset
Units with automatic reset restart automatically after stop.

Permissible operating pressure
The highest permissible constant pressure or pressure variation the unit can be exposed to.

Maximum working pressure
The maximum permissible pressure for safe functioning of a heating system or any of its parts.

Maximum test pressure
The maximum pressure applied in strength or leakage tests on heating system or components thereof.

Snap function
A specific contact force is maintained until snap is initiated. The time over which contact force reaches zero is a few milliseconds; therefore, contact bounce cannot occur as a result, for example, of slight vibrations before cut-out.
The snap-action contact system will continue to function even when micro-welds are created between the contacts during cut-in.
The force created to separate the contacts is strong, and instantly shears off all contact surface welds that have been created as the result of cut-in action.
These design features ensure that the cut-out point of the KP control remains very accurate and completely independent of the magnitude of the current load.

Current ratings:

AC – 1
The alternating current rating, in amperes, of the non-inductive, slightly inductive loads or resistive furnaces

AC – 3
The alternating current rating, in amperes, of the squirrel-cage motors: starting, plugging, inching

AC – 15
The alternating current rating, in amperes, of electromagnetic loads (>72VA)

DC – 13
The direct current rating, in amperes, of electromagnets

Danfoss can accept no responsibility for possible errors in catalogues, brochures and other printed material. Danfoss reserves the right to alter its products without notice. This also applies to products already on order provided that such alterations can be made without subsequential changes being necessary in specifications already agreed.
All trademarks in this material are property of the respective companies. Danfoss and the Danfoss logotype are trademarks of Danfoss A/S. All rights reserved.

© Danfoss | DCS (jmn) | 2015.08

Below is a list of articles with direct links to our shop Electric Automation Network where you can see:

- Quote per purchase volume in real time.
- Online documentation and datasheets of all products.
- Estimated delivery time enquiry in real time.
- Logistics systems for the shipment of materials almost anywhere in the world.
- Purchasing management, order record and tracking of shipments.

To access the product, click on the green button.

Product	Code	Reference	Product link
KP15 Pressure switch M/16	060000766	060-000766	Buy on EAN
KP17WB Pressure switch M/24	060539766	060-539766	Buy on EAN
KP36 Pressure switch M/36	060214466	060-214466	Buy on EAN
KP7W Pressure switch M/36	060119066	060-119066	Buy on EAN
KP15A Pressure switch M/24	060129666	060-129666	Buy on EAN
KP15 Pressure switch M/32	060124966	060-124966	Buy on EAN
KP1A Pressure switch M/14	060116166	060-116166	Buy on EAN
KP5 Pressure switch M/32	060117966	060-117966	Buy on EAN
KP44 Pressure switch M/32	060001366	060-001366	Buy on EAN
KP34 Pressure switch M/10	060216366	060-216366	Buy on EAN
KP76 Thermostat M/32	060L120066		Buy on EAN
KP5 Pressure switch M/36	060114266	060-114266	Buy on EAN
KP7ABS Pressure switch M/24	060501366	060-501366	Buy on EAN
KP5 Pressure switch M/36	060117366	060-117366	Buy on EAN
KP15 Pressure switch M/24	060124566	060-124566	Buy on EAN

KP7BS Pressure switch M/24	060120066	060-120066	Buy on EAN
KPI36 Pressure switch M/36	060113866	060-113866	Buy on EAN
KP36 Pressure switch M/36	060215966	060-215966	Buy on EAN
KP15 Pressure switch M/24	060114866	060-114866	Buy on EAN
KP36 Pressure switch M/36	060114466	060-114466	Buy on EAN
KP17W Pressure switch M/24	060126766	060-126766	Buy on EAN
KP5A Pressure switch M/36	060500766	060-500766	Buy on EAN
KP15 Pressure switch M/24	060126166	060-126166	Buy on EAN
KP17W Pressure switch M/24	060127566	060-127566	Buy on EAN
KP34 Pressure switch M/10	060214966	060-214966	Buy on EAN
KP5 Pressure switch M/16	060001866	060-001866	Buy on EAN
KP35 Pressure switch M/18	060215166	060-215166	Buy on EAN
KP1A Pressure switch M/36	060500466	060-500466	Buy on EAN
KP6B Pressure switch M/36	060519166	060-519166	Buy on EAN
KP5 Pressure switch M/32	060206466	060-206466	Buy on EAN
KP1A Pressure switch M/14	060116066	060-116066	Buy on EAN
KP15 Pressure switch M/24	060126566	060-126566	Buy on EAN
KP6AS Pressure switch M/36	060537366	060-537366	Buy on EAN
KP1 Pressure switch M/16	060110566	060-110566	Buy on EAN
KP15 Pressure switch M/24	060122066	060-122066	Buy on EAN
KP1 Pressure switch M/32	060205166	060-205166	Buy on EAN
KP15A Pressure switch M/10	060128366	060-128366	Buy on EAN
KP35 Pressure switch M/36	060216666	060-216666	Buy on EAN
KP1A Pressure switch M/36	060500566	060-500566	Buy on EAN
KP1 Pressure switch M/36	060114166	060-114166	Buy on EAN
KP5 Pressure switch M/32	060118066	060-118066	Buy on EAN