At the end of this document you will find links to products related to this catalog. You can go directly to our shop by clicking HERE. HERE

Photoelectrics Amplifier Type S142A..

- µ-Processor controlled
- Amplifier relay for photoelectric switches
- Automatic or manual emitter power regulation
- Self-diagnostic functions
- Alignment help
- Timer option, S142B..
- Rated operational voltage: 24 VAC/DC, 24 VAC, 115 VAC or 230 VAC
- Output 8 A/250 VAC SPDT relay and 100 mA NPN
- LED indication: Automatic gain, output, level, emitter or receiver fault

Product Description

µ-Processor controlled amplifier for one set of photoelectric sensors, type MOFTR. Utilising an 11-pin circular plug for easy connection.
8 A SPDT relay output, NPN / PNP transistor output or alarm output. Diagnostics for sensor test during operation. Alignment help via LED or alternation of alarm output. Level indication for dirt accumulation. Manual or automatic emitter power regulation. Two emitter codes available for high neighbour immunity.

Ordering Key

S142 A RNN 924

- **Type**
- **Special function**
- **Output type (R-Relay, N-NPN, P-PNP, T-Test)**
- **Power supply**

Type Selection

Function diameter	Ordering no. Supply: 24 VAC/DC	Ordering no. Supply: 24 VAC	Ordering no. Supply: 115 VAC	Ordering no. Supply: 230 VAC
NPN output & Test input	**S142 A RNT 924**	**S142 A RNT 024**	**S142 A RNT 115**	**S142 A RNT 230**
NPN output & Alarm output	**S142 A RNN 924**[1)]	**S142 A RNN 024**[1)]	**S142 A RNN 115**[1)]	**S142 A RNN 230**[1)]
PNP out., PNP alarm & Test	**S142 A PPT 924**		**S142 A PPT 115**	**S142 A PPT 230**

[1)] Amplifier replacement for S1420156xxx

Specifications

Rated operational voltage (U_B)		
Pins 2 & 10	230	195 to 265 VAC, 45 to 65 Hz
	115	98 to 132 VAC, 45 to 65 Hz
	024	20.4 to 27.6 VAC, 45 to 65 Hz
	924	20.4 to 27.6 VAC/DC Class 2
Rated operational power		
AC supply		3.3 VA
AC/DC supply		1.6 VA / 1.4 W
Delay on operate (t_v)		< 300 mS
Outputs		
Relay Rating (AgCdO)		µ (micro gap)
Resistive loads	AC1	8 A / 250 VAC (2500 VA)
	DC1	0.2 A / 250 VDC (50 W)
	or	2 A 25 VDC (50 W)
Electrical life (typical)	AC1	> 100.000 operations
Transistor output data		
Output current	(I_e)	< 100 mA @ 10-40 VDC (max. load capacity 100 nF)
Voltage drop	(U_d)	< 2,5 VDC @ 100 mA

Output function		Make or break on DIP-switch
Relay		SPDT
Transistor		NPN / PNP, 100 mA, 10-40 VDC
Alarm		NPN / PNP, 100 mA, 10-40 VDC Delay on alarm 10 sec
Test input (Mute)	**NPN**	**PNP**
Emitter enabled	> 5.0 VDC	< V_{CC} - 3 VDC
Emitter disabled	< 3.0 VDC	> V_{CC} - 5 VDC
Imax @ 40 VDC	1 mA	
Protection output transistor		Reverse polarity, short circuit and transients
Supply to sensors		
Emitter		Pins 5 & 7
Supply voltage (open loop)		15 V square wave
Current		< 450 mA, short circuit protected
Output resistance		10 Ω
Receiver		Pins 6 & 8
Supply voltage (open loop)		5 VDC
Short-circuit current		10 mA
Input resistance		470 Ω

CARLO GAVAZZI

Specifications

Emitter power	
Power	Settings on DIP switch no 4, 50 % or 100 % range
Sensitivity adjustment	
Manual	240° Potentiometer
Automatic /Auto LED ON)	Potentiometer settings fully counter clockwise
Max. sensing distance	Maximum range indicated on photoelectric switch data-sheets in 100 % settings
Rated insulation voltage (U_i)	250 VAC
Dielectric voltage	>2.0 KVAC (rms) (contacts / electronics)
Rated impulse withstand volt.	4 kV (1.2/50 µS) (contacts / electronics) (IEC 664)
Operating frequency (f)	
Light / Dark ratio	1:1
Relay output	20 HZ
Transistor output	20 HZ

Response time	
OFF-ON (t_{ON})	20 mS
ON-OFF (t_{OFF})	30 mS
Environment	
Overvoltage category	III (IEC 60664)
Degree of protection	IP 20 /IEC 60529, 60947-1)
Pollution degree	3 (IEC 60664/60664A, 60947-1)
Temperature	
Operating	-20° to +50°C (-4° to +122°F)
Storage	-50° to +85°C (-58° to +185°F)
Housing material	NORYL SE1, light grey
Weight	
AC supply	200 g
AC/DC supply	125 g
Approvals	UL508, UL325, CSA
CE marking	EN12445, EN12453, EN12978

Specifications

Diagnostic
If a fault occurs on either the emitter or receiver the Alarm LED and output will turn ON.

Receiver fault
During normal operation the receiver is monitored for faults.
If the wires are short-circuited the “Code A, Yellow LED” flashes at a rate of 2 Hz.
If the wires are broken the “Code A, Yellow LED” flashes at a rate of 4 Hz.

Emitter fault
During normal operation the emitter is monitored for faults.
If the wires are short-circuited the “Code B, Green LED” flashes at a rate of 2 Hz.
If the wires are broken the “Code B, Green LED” flashes at a rate of 4 Hz.

Alignment
If the alignment DIP switch is set the Yellow Signal LED Flashes according to the signal quality.
Low frequency means weak signal.
Steady indication means maximum signal. On long distance it is not possible to get a steady signal but the alignment is optimal when the led flashes with the highest frequency.
On short distance the sensitivity can be reduced using the potentiometer and then get better readings in the alignment LED.

The ALARM output will follow the Signal LED in alignment mode, so a Sensor tester (optional) can be connected to serve as a remote indication during alignment of the sensors.
NB! In alignment mode the output is off.

Code A or B
When two sensor pairs are mounted close to each other it is recommended to select one set to Code A and the other to Code B to minimize crosstalk.

Dirt reserve
For optimal detection excess gain settings can be selected using the Level Low/High DIP switch:
- High: Allows high dirt build-up.
- Low: Allows detection of semi-transparent objects.

Power settings
To avoid a too strong emitter the power can be reduced to 50% reducing the max distance to 25%

Wiring Diagram

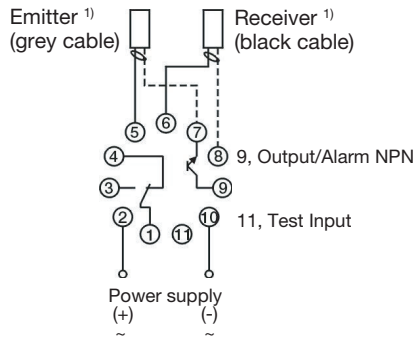

S142.RNT..

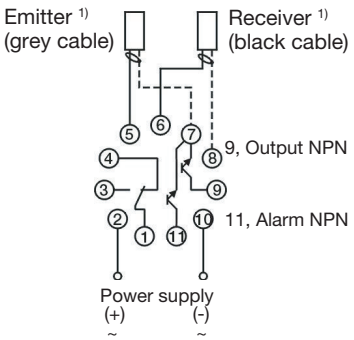

S142.RNN..

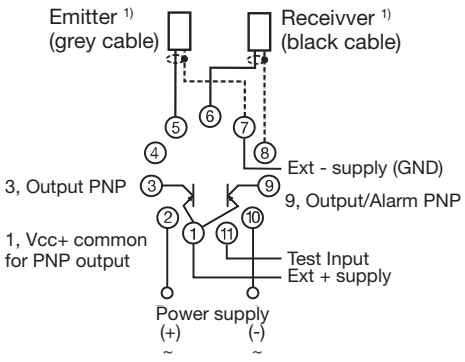

S142.PPT..

1) Photoelectric sensor types, M.FT.. and M.FR..

Specifications are subject to change without notice (27.06.2014)

Operation Diagram

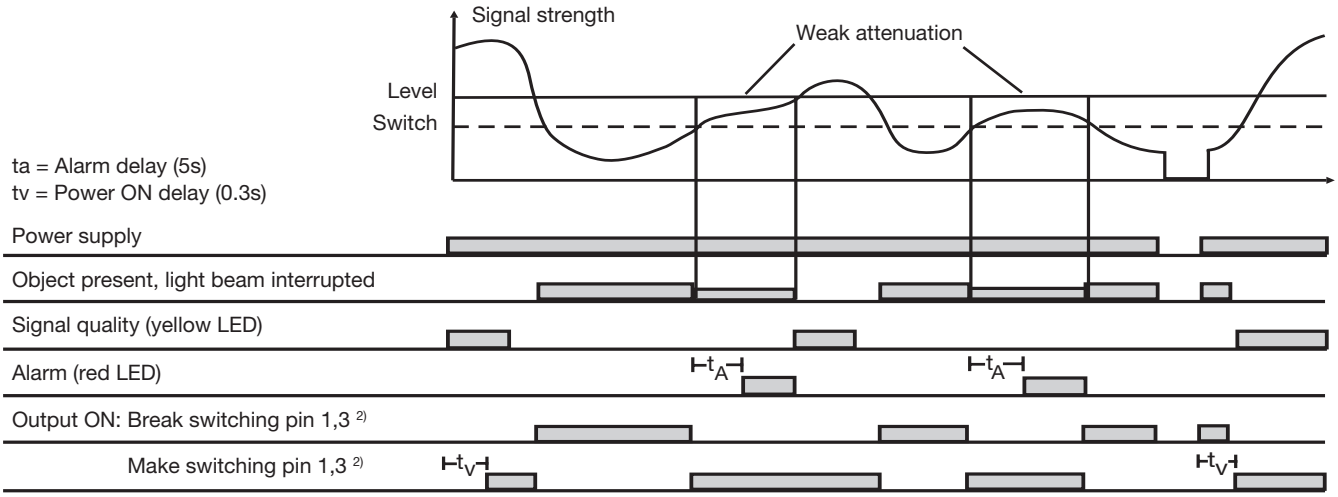

2) Switching function selected by DIP-switch, inverted function on pin 1, 4

Dimensions

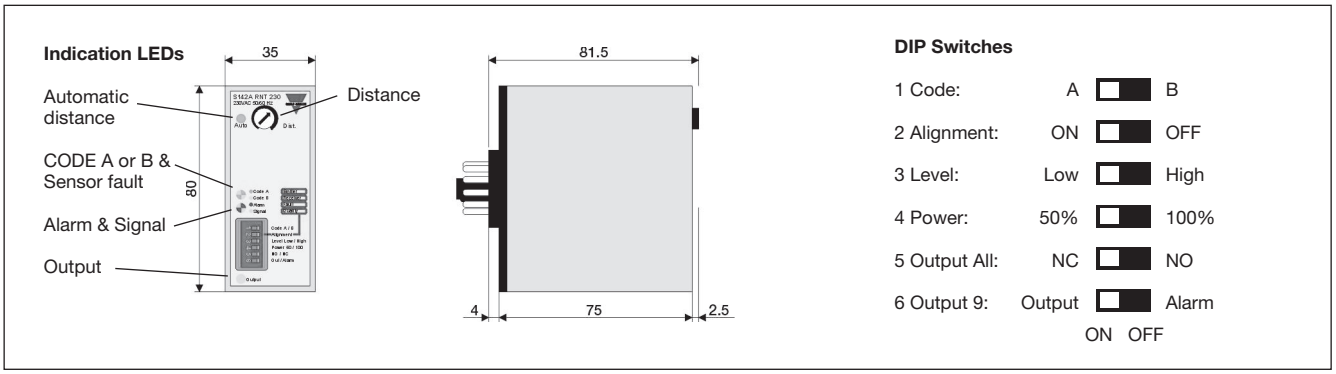

Connection to sensortester

Connection to sensortester ST-03 for alignment

	Sensortester		
	-	Signal	+
RNT Pin no.	10	9	
RNN Pin no.	10	11	
PPT Pin no.		9	2

Accessories

- 11 pole circular socket ZPD11
- Holding down spring HF
- Mounting rack SM13
- Front panel mounting bezel FRS2

Delivery Contents

- Amplifier
- **Packaging:** Carton box

Below is a list of articles with direct links to our shop Electric Automation Network where you can see:

- Quote per purchase volume in real time.
- Online documentation and datasheets of all products.
- Estimated delivery time enquiry in real time.
- Logistics systems for the shipment of materials almost anywhere in the world.
- Purchasing management, order record and tracking of shipments.

To access the product, click on the green button.

Product	Code	Reference	Product link
Selected parameters SYSTEM Photo-Amplifier HOUSING rectangular SENSING RANGE Dependend on sensor CONNECTION Plug and Socket OUTPUT RELAY SPDT MATERIAL Plastic Others SENSING RANGE Up to 50 m HOUSING 80 x 75 x 35 mm MATERIAL NORYL ADDITIONAL Test input	S142ARNT230		Buy on EAN