At the end of this document you will find links to products related to this catalog. You can go directly to our shop by clicking HERE. HERE

Solid State Relays
Industrial, 1-Phase ZS (IO) w. LED and Built-in Varistor
Types RM 23, RM 40, RM 48, RM 60

- Zero switching (RM1A) or instant-on switching (RM1B) AC Solid State Relay
- Direct copper bonding (DCB) technology
- LED indication
- Built-in varistor
- Clip-on IP 20 protection cover
- Self-lifting terminals
- Housing free of moulding mass
- 2 input ranges: 3-32* VDC and 20-280VAC/22-48VDC
- Operational ratings: Up to 100AACrms and 600VACrms
- Blocking voltage: Up to 1400V_p
- Opto-isolation: > 4000VACrms
- CE, RoHS compliant
- cURus, CSA, CCC

Product Description

The industrial, 1-phase relay with antiparallel thyristor output is the most widely used industrial SSR due to its multiple application possibilities. The relay can be used for resistive, inductive and capacitive loads. The zero switching relay switches ON when the sinusoidal curve crosses zero and switches OFF when the current crosses zero. The instant-on relay with DC control input can be used for phase control. The built-in varistor secures transient protection for the heavy industrial applications, and the LED indicates the status of the control input. The clip-on cover is securing touch protection to IP 20. Protected output terminals can handle cables up to 16mm^2.

Ordering Key

RM 1 A 23 D 25

- **Solid State Relay**
- **Number of poles**
- **Switching mode**
- **Rated operational voltage**
- **Control voltage**
- **Rated operational current**

Type Selection

Switching mode	Rated operational voltage	Control voltage	Rated operational current
A: Zero Switching B: Instant-on switching (DC Control only)	23: 230VACrms 40: 400VACrms 48: 480VACrms 60: 600VACrms	A: 20-280VAC/22-48VDC D: 3-32VDC* *4 to 32VDC for 400, 480 and 600VAC types *4 to 32VDC for RM1B types	25: 25AACrms 50: 50AACrms 75: 75AACrms 100: 100AACrms

Selection Guide

Rated operational voltage	Blocking voltage	Control voltage	Rated operational current 25A	50A	75A	100A
230VACrms	650V_p	3 - 32VDC	**RM1A23D25**	**RM1A23D50**	**RM1A23D75**	**RM1A23D100**
		20 to 280VAC 22 to 48VDC	**RM1A23A25**	**RM1A23A50**	**RM1A23A75**	**RM1A23A100**
400VACrms	850V_p	4 - 32VDC	**RM1A40D25**	**RM1A40D50**	**RM1A40D75**	**RM1A40D100**
		20 to 280VAC 22 to 48VDC	**RM1A40A25**	**RM1A40A50**	**RM1A40A75**	**RM1A40A100**
480VACrms	1200V_p	4 - 32VDC	**RM1A48D25**	**RM1A48D50**	**RM1A48D75**	**RM1A48D100**
		20 to 280 VAC 22 to 48VDC	**RM1A48A25**	**RM1A48A50**	**RM1A48A75**	**RM1A48A100**
600VACrms	1400V_p	4 - 32VDC	**RM1A60D25**	**RM1A60D50**	**RM1A60D75**	**RM1A60D100**
		20 to 280VAC 22 to 48VDC	**RM1A60A25**	**RM1A60A50**	**RM1A60A75**	**RM1A60A100**

CARLO GAVAZZI

General Specifications

	RM1.23...	RM1.40...	RM1.48...	RM1.60...
Operational voltage range				
RM1A...	24 to 265VACrms	42 to 440VACrms	42 to 530VACrms	42 to 660VACrms
RM1B...	42 to 265VACrms	42 to 440VACrms	42 to 530VACrms	42 to 660VACrms
Blocking voltage	≥ 650V_p	≥ 850V_p	≥ 1200V_p	≥ 1400V_p
Zero voltage turn-on	≤ 10V	≤ 10V	≤ 10V	≤ 10V
Operational frequency range	45 to 65Hz	45 to 65Hz	45 to 65Hz	45 to 65Hz
Power factor	> 0.5 @ 230VACrms	> 0.5 @ 400VACrms	> 0.5 @ 480VACrms	> 0.5 @ 600VACrms
Approvals	UR, cUR, CSA, CCC	UR, cUR, CSA, CCC	UR, cUR, CSA, CCC	UR, cUR, CSA, CCC
CE-marking	Yes	Yes	Yes	Yes *
Isolation				
Input to Output	4000 Vrms	4000 Vrms	4000 Vrms	4000 Vrms
input and Output to case	4000 Vrms	4000 Vrms	4000 Vrms	4000 Vrms

* Heatsink must be connected to ground

Input Specifications

	RM1...D..	RM1...A..
Control voltage range		
RM1A23...	3 - 32VDC	20 - 280VAC, 22 - 48VDC
RM1A40... RM1A48... RM1A60...	4 - 32VDC	20 - 280VAC, 22 - 48VDC
RM1B...	4 - 32VDC	-
Pick-up voltage @ Ta = 25˚C		
RM1A23...	2.5VDC	18VAC/DC
RM1A40... RM1A48... RM1A60...	3.5VDC	18VAC/DC
RM1B ...	3.5VDC	-
Reverse voltage	32VDC	-
Drop out voltage	1.2VDC	6VAC/DC
Input current @ max input voltage		
RM1A	≤12 mA	≤ 20mA
RM1B	≤15 mA	-
Response time pick-up		
RM1A	1/2 cycle	12ms
RM1B	0.1ms	-
Response time drop-out	1/2 cycle	40ms

Output Specifications

	RM1....25	RM....50	RM1....75	RM1....100
Rated operational current				
AC51 @ Ta=25°C	25Arms	50Arms	75Arms	100Arms
AC53a @ Ta=25°C	5Arms	15Arms	20Arms	30Arms
Min. operational current	150mA	250mA	400mA	500mA
Rep. overload current t=1 s	< 55AACrms	< 125AACrms	< 150AACrms	< 200AACrms
Non-rep. surge current t=10 ms	325A_p	600A_p	1150A_p	1900A_p
Off-state leakage current @ rated voltage and frequency	< 3mArms	< 3mArms	< 3mArms	< 3mArms
I^2t for fusing t=10 ms	< 525A^2s	< 1800A^2s	< 6600A^2s	< 18000A^2s
On-state voltage drop @ rated current	1.6Vrms	1.6Vrms	1.6Vrms	1.6Vrms
Critical dV/dt off-state min.	1000V/µs	1000V/µs	1000V/µs	1000V/µs
Endurance testing acc. to UL508	100,000 cycles	100,000 cycles	100,000 cycles	6,000 cycles

Note: UL requirement for General Use Endurance testing is 6,000 cycles

Motor Ratings*: HP (UL508)

	230VAC	400VAC	480VAC	600VAC
RM1..25	1.5HP	3HP	3HP	5HP
RM1..50	3HP	5HP	7.5HP	10HP
RM1..75	5HP	10HP	10HP	15HP
RM1..100	7.5HP	15HP	20HP	25HP

* with suitable heatsink

Electromagnetic Compatibility

EMC Immunity	IEC/EN 61000-6-2
Electrostatic Discharge (ESD) Immunity	IEC/EN 61000-4-2
Air discharge, 8kV	Performance Criteria 2
Contact, 4kV	Performance Criteria 2
Electrical Fast Transient (Burst) Immunity	IEC/EN 61000-4-4
Output: 2kV, 5kHz	Performance Criteria 1
Input: 1kV, 5kHz	Performance Criteria 1
Electrical Surge Immunity	IEC/EN 61000-4-5
Output, line to line, 1kV	Performance Criteria 2
Output, line to earth, 2kV	Performance Criteria 2
Input, line to line, 1kV (RM1..D..)	Performance Criteria 2
Input, line to earth, 2kV (RM1..D..)	Performance Criteria 2
Input, line to line, 500V[1] (RM1..A..)	Performance Criteria 2
Input, line to earth, 500V[1](RM1..A..)	Performance Criteria 2

Radiated Radio Frequency Immunity	IEC/EN 61000-4-3
10V/m, 80 - 1000 MHz	Performance Criteria 1
10V/m, 1.4 - 2.0GHz	Performance Criteria 1
3 V/m, 2.0 - 2.7GHz	Performance Criteria 1
Conducted Radio Frequency Immunity	IEC/EN 61000-4-6
10V/m, 0.15 - 80 MHz	Performance Criteria 1
Voltage Dips Immunity	IEC/EN 61000-4-11
0% for 10ms	Performance Criteria 2
70% for 500ms	Performance Criteria 2
Voltage Interruptions Immunity	IEC/EN 61000-4-11
0% for 5000ms	Performance Criteria 2

EMC Emission	IEC/EN 61000-6-4
Radio Interference Voltage Emission (Conducted)	IEC/EN 55011
0.15 - 30MHz	Class A (industrial) with filters IEC/EN 60947-4-3 Class A (no filtering needed up to 75AAC)

Radio Interference Field Emission (Radiated)	IEC/EN 55011
30 - 1000MHz	Class B

* For higher surge voltage levels a varistor should be connected across the control terminals.

Notes:
- Control input lines must be installed together to maintain products' susceptibility to Radio Frequency interference.
- Performance Criteria 1: No degradation of performance or loss of function is allowed when the product is operated as intended.
- Performance Criteria 2: During the test, degradation of performance or partial loss of function is allowed. However, when the test is complete the product should return operating as intended by itself.
- Performance Criteria 3: Temporary loss of function is allowed, provided the function can be restored by manual operation of the controls.

Thermal Specifications

	RM1....25	RM1....50	RM1.60.50	RM1....75	RM1....100
Operating temperature range	-20° to 70°C	-20° to 70°C	-20° to 70°C	-20° to 70°C	-20° to 70°C
Storage temperature range	-40° to 100°C	-40° to 100°C	-40° to 100°C	-40° to 100°C	-40° to 100°C
Junction temperature	≤ 125°C	≤ 125°C	≤ 125°C	≤ 125°C	≤ 125°C
R_{th} junction to case	≤ 0.80°C/W	≤ 0.50°C/W	≤ 0.72°C/W	≤ 0.35°C/W	≤ 0.30°C/W
R_{th} junction to ambient	≤ 20.0°C/W	≤ 20.0°C/W	≤ 20.0°C/W	≤ 20.0°C/W	≤ 20.0°C/W

Housing Specifications

Weight		**Relay**	
25A, 50A	Approx. 60g	Mounting screws	M5
75A, 100A	Approx. 100g	Mounting torque	1.5-2.0Nm
Baseplate		**Control terminal**	
25A, 50A	Aluminium	Mounting screws	M3 x 9
75A, 100A	Copper, nickel-plated	Mounting torque	0.5Nm
Potting compound	None	**Power terminal**	
		Mounting screws	M5 x 9
		Mounting torque	2.4Nm

Functional Diagram

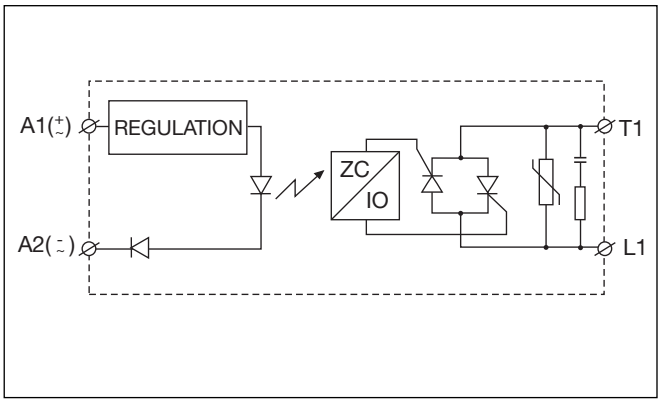

Dimensions

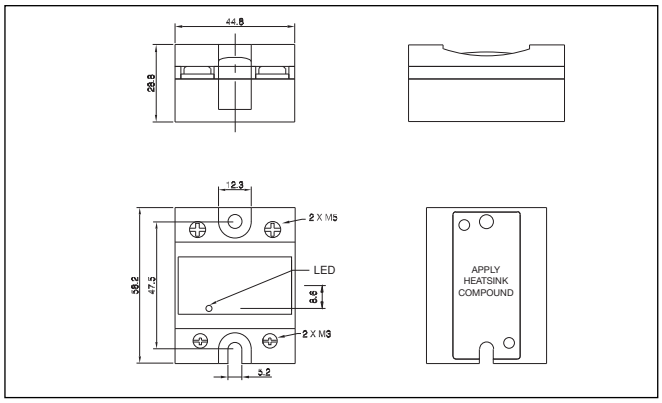

All dimensions in mm

Connection Diagram

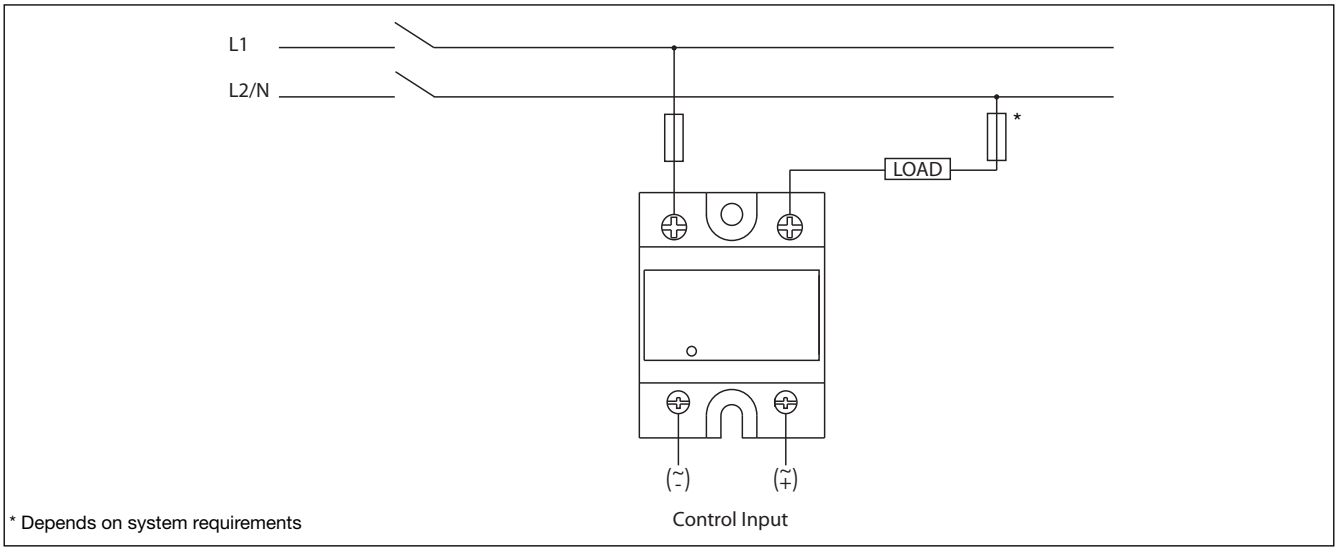

CARLO GAVAZZI

Heatsink Dimensions (load current versus ambient temperature)

RM....25

Load current [A]	Thermal resistance [°C/W] 20	30	40	50	60	70	Power dissipation [W]
25.0	2.70	2.34	1.98	1.61	1.25	0.89	28
22.5	3.10	2.69	2.28	1.86	1.45	1.04	24
20.0	3.61	3.13	2.65	2.18	1.70	1.23	21
17.5	4.26	3.70	3.14	2.59	2.03	1.47	18
15.0	5.14	4.47	3.80	3.14	2.47	1.80	15
12.5	6.38	5.56	4.73	3.91	3.09	2.27	12
10.0	8.25	7.19	6.14	5.08	4.02	2.97	9
7.5	11.4	9.94	8.49	7.04	5.59	4.14	7
5.0	17.7	15.4	13.2	11.0	8.74	6.51	4
2.5	-	-	-	-	18.2	13.6	2

T_A Ambient temp. [°C]

Junction to ambient thermal resistance, $R_{th\ j\text{-}a}$	< 20.0	°C/W
Junction to case thermal resistance, $R_{th\ j\text{-}c}$	< 0.80	°C/W
Case to heatsink thermal resistance, $R_{th\ c\text{-}s}$[2]	< 0.20	°C/W
Maximum allowable case temperature	100	°C
Maximum allowable junction temperature	125	°C

RM....50

Load current [A]	Thermal resistance [°C/W] 20	30	40	50	60	70	Power dissipation [W]
50.0	1.03	0.86	0.70	0.53	0.37	0.20	61
45.0	1.27	1.09	0.90	0.71	0.52	0.33	53
40.0	1.54	1.32	1.10	0.89	0.67	0.45	46
35.0	1.85	1.59	1.34	1.08	0.82	0.57	39
30.0	2.26	1.95	1.65	1.34	1.03	0.72	33
25.0	2.85	2.47	2.08	1.70	1.32	0.94	26
20.0	3.73	3.24	2.75	2.26	1.77	1.27	20
15.0	5.22	4.54	3.86	3.19	2.51	1.83	15
10.0	8.21	7.16	6.11	5.05	4.00	2.95	10
5.0	17.2	15.0	12.9	10.7	8.51	6.33	5

T_A Ambient temp. [°C]

Junction to ambient thermal resistance, $R_{th\ j\text{-}a}$	< 20.0	°C/W
Junction to case thermal resistance, $R_{th\ j\text{-}c}$	< 0.50	°C/W
Case to heatsink thermal resistance, $R_{th\ c\text{-}s}$[2]	< 0.20	°C/W
Maximum allowable case temperature	100	°C
Maximum allowable junction temperature	125	°C

RM1.60..50

Load current [A]	Thermal resistance [°C/W] 20	30	40	50	60	70	Power dissipation [W]
50.0	0.99	0.81	0.63	0.44	0.26	0.08	55
45.0	1.28	1.07	0.86	0.65	0.44	0.23	48
40.0	1.64	1.40	1.15	0.91	0.67	0.42	41
35.0	2.11	1.82	1.54	1.25	0.96	0.67	35
30.0	2.60	2.25	1.90	1.55	1.20	0.85	29
25.0	3.30	2.86	2.43	1.99	1.55	1.11	23
20.0	4.36	3.79	3.22	2.65	2.08	1.51	18
15.0	6.1	5.4	4.6	3.77	2.97	2.18	13
10.0	9.76	8.52	7.3	6.0	4.8	3.54	8
5.0	--	--	15.47	12.85	10.24	7.6	4

T_A Ambient temp. [°C]

Junction to ambient thermal resistance, $R_{th\ j\text{-}a}$	< 20.0	°C/W
Junction to baseplate case thermal resistance, $R_{th\ j\text{-}c}$	< 0.72	°C/W
Case to heatsink thermal resistance, $R_{th\ c\text{-}s}$[2]	< 0.20	°C/W
Maximum allowable heatsink temperature	100	°C
Maximum allowable junction temperature	125	°C

RM....75

Load current [A]	Thermal resistance [°C/W] 20	30	40	50	60	70	Power dissipation [W]
75.0	0.91	0.78	0.65	0.52	0.39	0.26	77
67.5	1.10	0.96	0.81	0.66	0.51	0.36	68
60.0	1.34	1.17	1.00	0.83	0.66	0.49	59
52.5	1.60	1.40	1.20	1.00	0.80	0.60	50
45.0	1.93	1.68	1.44	1.20	0.96	0.72	42
37.5	2.38	2.08	1.78	1.49	1.19	0.89	34
30.0	3.06	2.68	2.30	1.91	1.53	1.15	26
22.5	4.21	3.68	3.16	2.63	2.10	1.58	19
15.0	6.51	5.70	4.88	4.07	3.26	2.44	12
7.5	13.5	11.77	10.09	8.41	6.73	5.04	6

T_A Ambient temp. [°C]

Junction to ambient thermal resistance, $R_{th\ j\text{-}a}$	< 20.0	°C/W
Junction to case thermal resistance, $R_{th\ j\text{-}c}$	< 0.35	°C/W
Case to heatsink thermal resistance, $R_{th\ c\text{-}s}$[2]	< 0.10	°C/W
Maximum allowable heatsink temperature	100	°C
Maximum allowable junction temperature	125	°C

Heatsink Dimensions (load current versus ambient temperature) cont.

RM....100

Load current [A]	Thermal resistance [°C/W]						Power dissipation [W]
100.0	0.54	0.45	0.36	0.27	0.18	0.09	111
90.0	0.68	0.58	0.47	0.37	0.27	0.17	97
80.0	0.86	0.74	0.62	0.50	0.38	0.26	84
70.0	1.08	0.94	0.80	0.66	0.52	0.38	71
60.0	1.37	1.20	1.03	0.85	0.68	0.51	59
50.0	1.70	1.49	1.28	1.06	0.85	0.64	47
40.0	2.21	1.93	1.66	1.38	1.10	0.83	36
30.0	3.06	2.68	2.30	1.91	1.53	1.15	26
20.0	4.78	4.18	3.59	2.99	2.39	1.79	17
10.0	9.98	8.73	7.49	6.24	4.99	3.74	8
	20	30	40	50	60	70	T_A

Ambient temp. [°C]

Junction to ambient thermal resistance, $R_{th\ j\text{-}a}$	< 20.0	°C/W
Junction to case thermal resistance, $R_{th\ j\text{-}c}$	< 0.30	°C/W
Case to heatsink thermal resistance, $R_{th\ c\text{-}s}$[2]	< 0.10	°C/W
Maximum allowable heatsink temperature	100	°C
Maximum allowable junction temperature	125	°C

2. Thermal resistance case to heatsink valves are applicable upon application of a fine layer of silicon based thermal paste HTS02S from Electrolube between SSR and heatsink.

Heatsink Selection

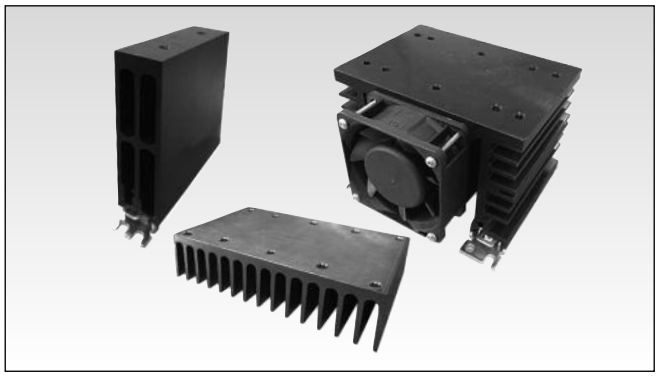

Ordering Key

RHS..

- Heatsinks and fans
- 5.40°C/W to 0.12°C/W thermal resistance
- DIN, panel or thru wall mounting
- Single or multiple SSR mounting

Heatsink Range Overview:
http://www.productselection.net/PDF/UK/ssr_accessories.pdf

Heatsink Selector Tool:
http://www.productselection.net/heatsink/heatsinkselector.php?LANG=UK

Specifications are subject to change without notice (05.08.2014)

CARLO GAVAZZI

Short Circuit Protection

Protection Co-ordination, Type 1 vs. Type 2:

Type 1 protection implies that after a short circuit, the device under test will no longer be in a functioning state. In type 2 co-ordination the device under test will still be functional after the short circuit. In both cases, however, the short circuit has to be interrupted. The fuse between enclosure and supply shall not open. The door or cover of the enclosure shall not be blown open. There shall be no damage to conductors of terminals and the conductors shall not separate from terminals. Therese shall be no breakage or cracking of insulating bases to the extent that the integrity of the mounting of live parts is impaired. Discharge of parts or any risk of fire shall not occur.

The product variants listed in the table hereunder are suitable for use on a circuit capable of delivering not more than 65,000A rms Symmetrical Amperes, 600Volts maximum when protected by fuses. Tests at 65,000A were performed with Class J, fast acting: please refer to the table below for maximum allowed ampere rating of the fuse. Use fuses only.

Co-ordination type 1 (UL508)

Part No.	Prospective short circuit current [kArms]	Max. fuse size [A]	Class/ Model	Voltage [VAC]
RM1..25..	65	30	J or CC	600
RM1..50..	65	30	J	600
		20	HSJ20 (Mersen*)	600
RM1..75..	65	80	J	600
		60	HSJ60 (Mersen*)	600
RM1..100..	65	80	J	600
		60	HSJ60 (Mersen*)	600

Co-ordination type 2 (IEC/EN60947-4-3)

Part No.	Prospective short circuit current [kArms]	Max. fuse size [A]	Brand	Model	Size
RM1.xx.25.. (xx = 23, 40 or 48)	10	25	Mersen*	6.9 gRB 10-25	10.3 x 38
RM1.60.25..	10	20	Mersen*	6.9 gRB 10-20	10.3 x 38
RM1.xx.50.. (xx = 23 or 40)	10	50	Mersen*	6.9zz CP gRC 14x51/50	14 x 51
RM1.xx.50.. (xx = 48 or 60)	10	50	Mersen*	6.9zz CP gRC 22x58/50	22 x 58
RM1.xx.75.. (xx = 23, 40, 48 or 60)	10	63	Mersen*	6.9zz CP gRC 22x58/63	22 x 58
RM1.xx.100.. (xx = 23, 40, 48 or 60)	10	100	Mersen*	6.9zz CP gRC 22x58/100	22 x 58

zz = 00, without fuse trip indication

zz = 21, with fuse trip indication

* Formerly Ferraz Shawmut

CARLO GAVAZZI

Type 2 Protection with Miniature Circuit Breakers (M.C.B.s)

Solid State Relay type	ABB Model no. for Z - type M. C. B. (rated current)	ABB Model no. for B - type M. C. B. (rated current)	Wire cross sectional area [mm²]	Minimum length of Cu wire conductor [m]*
RM1..25..	**1-pole**			
	S201-Z4 (4A)	S201-B2 (2A)	1.0	21.0
	S201-Z6 UC (6A)	S201-B2 (2A)	1.0	21.0
			1.5	31.5
RM1..50..	**1-pole**			
	S201-Z10 (10A)	S201-B4 (4A)	1.0	7.6
			1.5	11.4
			2.5	19.0
	S201-Z16 (16A)	S201-B6 (6A)	1.0	5.2
			1.5	7.8
			2.5	13.0
			4.0	20.8
	S201-Z20 (20A)	S201-B10 (10A)	1.5	12.6
			2.5	21.0
	S201-Z25 (25A)	S201-B13 (13A)	2.5	25.0
			4.0	40.0
	2-pole			
	S202-Z25 (25A)	S202-B13 (13A)	2.5	19.0
			4.0	30.4
RM1..75..	**1-pole**			
	S201-Z20 (20A)	S201-B10 (10A)	1.5	4.2
			2.5	7.0
			4.0	11.2
	S201-Z32 (32A)	S201-B16 (16A)	2.5	13.0
			4.0	20.8
			6.0	31.2
	2-pole			
	S202-Z20 (20A)	S202-B10 (10A)	1.5	1.8
			2.5	3.0
			4.0	4.8
	S202-Z32 (32A)	S202-B16 (16A)	2.5	5.0
			4.0	8.0
			6.0	12.0
			10.0	20.0
	S202-Z50 (50A)	S202-B25 (25A)	4.0	14.8
			6.0	22.2
			10.0	37.0
RM1..100..	**1-pole**			
	S201-Z50 (50A)	S201-B25 (25A)	4.0	4.8
			6.0	7.2
			10.0	12.0
			16.0	19.2
	S201-Z63 (63A)	S201-B32 (32A)	6.0	7.2
			10.0	12.0
			16.0	19.2

* Between MCB and Load (including return path which goes back to the mains).

Note: A prospective current of 6kA and a 230/400V power supply system is assumed for the above suggested specifications. For cables with different cross section than those mentioned above please consult Carlo Gavazzi's Technical Support Group.

Specifications are subject to change without notice (05.08.2014)

FASTON terminals

- Faston tabs
- Tab dimensions according to DIN 46342 part 1
- Pure tin-plated brass

Ordering Key

Screw mounted Faston terminals — **RM1A48D25 | F 4***

RS, RM Solid State Relay
Faston terminals
Tab orientation

Input Tab width: 4.8mm
Output Tab width: 6.3mm

Faston terminals in packs of 20 — **RM48 ** | F4***

RS, RM Solid State Relay
Tab orientation

*** 0: Flat (0º)**
4: Angled (45º)

**** 48: 4.8mm faston for input**
63: 6.3mm faston for output

Fork Terminals

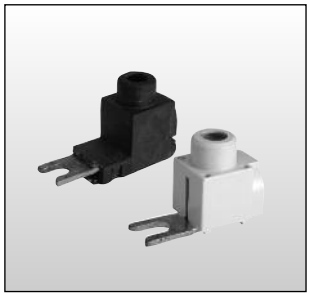

- Terminal adaptors for 35mm^2 cable
- Type RM635FK
- Pack size: 20 pieces

Ordering Key

RM635FK | P

RM terminal adaptor
Touch protected (optional)

Other Accessories

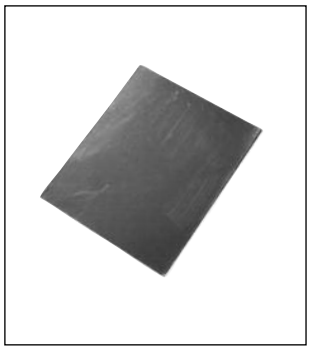

- Graphite thermal pad with adhesive on one side
- Type KK071CUT
- Dimensions: 35 x 43 x 0.25mm
- Packing quantity: 50pcs.

- Touch safety cover
- Type RMIP20
- IP20 protection degree
- Pack size: 20 pieces

All accessories can be ordered pre-assembled with Solid State Relays.
Other accessories include DIN rail adaptors, fuses, varistors and spacers.

For futher information refer to Accessories datasheets at:
www.productselection.net/PDF/UK/SSR_Accessories.pdf

Below is a list of articles with direct links to our shop Electric Automation Network where you can see:

- Quote per purchase volume in real time.
- Online documentation and datasheets of all products.
- Estimated delivery time enquiry in real time.
- Logistics systems for the shipment of materials almost anywhere in the world.
- Purchasing management, order record and tracking of shipments.

To access the product, click on the green button.

Product	Code	Reference	Product link
	RM1B60D25		Buy on EAN